AMENDMENT OF SOLICITATION/MODIFICATION OF CONTRACT

1. CONTRACT ID CODE	PAGE	OF PAGES
N/A	1	882

2. AMENDMENT/MODIFICATION NO.	3. EFFECTIVE DATE	4. REQUISITION/PURCHASE REQ. NO.	5. PROJECT NO. *(If applicable)*
0001	MAR. 25, 2003	N/A	SPEC. NO. 1106

6. ISSUED BY CODE

DEPARTMENT OF THE ARMY
U.S. ARMY ENGINEER DISTRICT, SACRAMENTO
SACRAMENTO, CALIFORNIA 95814-2922

7. ADMINISTERED BY *(If other than Item 6)* CODE

DEPARTMENT OF THE ARMY
US ARMY CORPS OF ENGINEERS,LOS ANGELES DISTRICT
P.O. BOX 532711
LOS ANGELES, CALIFORNIA 90053-2325

8. NAME AND ADDRESS OF CONTRACTOR *(No., street, county, State and ZIP Code)*

CODE FACILITY CODE

(√) X

9A. AMENDMENT OF SOLICITATION NO.
DACA09-03-R-0001

9B. DATED *(SEE ITEM 11)*
N/A

10A. MODIFICATION OF CONTRACTS/ORDER NO.
N/A

10B. DATED *(SEE ITEM 13)*
N/A

11. THIS ITEM ONLY APPLIES TO AMENDMENTS OF SOLICITATIONS

[X] The above numbered solicitation is amended as set forth in Item 14. The hour and date specified for receipt of Offers [ ] is extended, [X] is not extended.

Offers must acknowledge receipt of this amendment prior to the hour and date specified in the solicitation or as amended, by one of the following methods:

(a) By completing Items 8 and 15, and returning 1 copies of the amendment; (b) By acknowledging receipt of this amendment on each copy of the offer submitted; or (c) By separate letter or telegram which includes a reference to the solicitation and amendment numbers. FAILURE OF YOUR ACKNOWLEDGMENT TO BE RECEIVED AT THE PLACE DESIGNATED FOR THE RECEIPT OF OFFERS PRIOR TO THE HOUR AND DATE SPECIFIED MAY RESULT IN REJECTION OF YOUR OFFER. If by virtue of this amendment you desire to change an offer already submitted, such change may be made by telegram or letter, provided each telegram or letter makes reference to the solicitation and this amendment, and is received prior to the opening hour and date specified.

12. ACCOUNTING AND APPROPRIATION DATA *(If required)*
N/A NOTE: ITEM 13 BELOW IS N/A.

13. THIS ITEM APPLIES ONLY TO MODIFICATIONS OF CONTRACTS/ORDERS, IT MODIFIES THE CONTRACT/ORDER NO. AS DESCRIBED IN ITEM 14.

(√)
A. THIS CHANGE ORDER IS ISSUED PURSUANT TO: *(Specify authority)* THE CHANGES SET FORTH IN ITEM 14 ARE MADE IN THE CONTRACT ORDER NO. IN ITEM 10A.
N/A

B. THE ABOVE NUMBERED CONTRACT/ORDER IS MODIFIED TO REFLECT THE ADMINISTRATIVE CHANGES *(such as changes in paying office, appropriation date, etc.)* SET FORTH IN ITEM 14, PURSUANT TO THE AUTHORITY OF FAR 43.103(b).

C. THIS SUPPLEMENTAL AGREEMENT IS ENTERED INTO PURSUANT TO AUTHORITY OF:

D. OTHER *(Specify type of modification and authority)*
N/A

E. IMPORTANT: Contractor [ ] is not, [ ] is required to sign this document and return _____ copies to the issuing office.

14. DESCRIPTION OF AMENDMENT/MODIFICATION *(Organized by UCF section headings, including solicitation/contract subject matter where feasible.)*

Indefinite Delivery Indefinite Quantity (IDIQ) Contract for
Asphalt and Pavement Repairs at Military Installations

NOTE: Bidders/Offerors shall base their price proposal on the Line Items and Unit Measures contained in the Pricing Schedule, disregarding any conflicting statements contained in the Specifications Technical Sections.
The technical sections will be used to define the scope of work, products and methods of construction(Execution) for that item of work covered in the section.

1 Encl

1. Revised Pages: Technical Specifications (Division 01 thru Division 16) Replace existing Technical Specifications in their entirety. (New versions are in English Units in lieu of Metric Units)

Except as provided herein, all terms and conditions of the document referenced in Item 9A or 10A, as heretofore changed, remains unchanged and in full force and effect.

15A. NAME AND TITLE OF SIGNER *(Type or print)*		16A. NAME AND TITLE OF CONTRACTING OFFICER *(Type or print)*	
15B. CONTRACTOR/OFFEROR *(Signature of person authorized to sign)*	15C. DATE SIGNED	16B. UNITED STATES OF AMERICA BY *(Signature of Contracting Officer)*	16C. DATE SIGNED

TECHNICAL SPECIFICATIONS

SECTION TABLE OF CONTENTS

DIVISION 01 - GENERAL REQUIREMENTS

SECTION 01270

MEASUREMENT AND PAYMENT

PART 1 GENERAL

1.1 REFERENCES
1.2 SUBMITTALS
1.3 LUMP SUM PAYMENT ITEMS
1.3.1 Mobilization and Demobilization
1.3.1.1 Payment
1.3.1.2 Unit of Measure
1.3.2 Structure # 1
1.3.2.1 Payment
1.3.2.2 Unit of Measure
1.3.3 Structure # 2
1.3.3.1 Payment
1.3.3.2 Unit of Measure
1.4 UNIT PRICE PAYMENT ITEMS
1.4.1 Excavation
1.4.1.1 Payment
1.4.1.2 Measurement
1.4.1.3 Unit of Measure
1.4.2 R 200 Riprap
1.4.2.1 Payment
1.4.2.2 Measurement
1.4.2.3 Unit of Measure
1.4.3 Deformed Steel Bars for Concrete Reinforcement
1.4.3.1 Payment
1.4.3.2 Measurement
1.4.3.3 Unit of Measure
1.4.4 Bituminous Base Course
1.4.4.1 Payment
1.4.4.2 Measurement
1.4.4.3 Unit of Measure
1.4.5 Bituminous Materials
1.4.5.1 Payment
1.4.5.2 Measurement
1.4.5.3 Unit of Measure

PART 2 PRODUCTS (Not Applicable)

PART 3 EXECUTION (Not Applicable)

-- End of Section Table of Contents --

SECTION 01270

MEASUREMENT AND PAYMENT

PART 1 GENERAL

1.1 REFERENCES

The publications listed below form a part of this specification to the extent referenced. The publications are referred to in the text by basic designation only.

AMERICAN SOCIETY FOR TESTING AND MATERIALS (ASTM)

ASTM A 615/A 615M	(1996a) Deformed and Plain Billet-Steel Bars for Concrete Reinforcement
ASTM C 127	(1988; R 1993) Specific Gravity and Absorption of Course Aggregate
ASTM C 128	(1993) Specific Gravity and Absorption of Fine Aggregate
ASTM D 1250	(1980; R 1990) Petroleum Measurement Tables

1.2 SUBMITTALS

Government approval is required for all submittals with a "GA" designation; submittals having an "FIO" designation are for information only. The following shall be submitted in accordance with Section 01330 SUBMITTAL PROCEDURES:

SD-01 Data

Weight Certificates; FIO.

Submit certified weight certificates for R 200 Riprap.

1.3 LUMP SUM PAYMENT ITEMS

Payment items for the work of this contract for which contract lump sum payments will be made are listed in the BIDDING SCHEDULE and described below. All costs for items of work, which are not specifically mentioned to be included in a particular lump sum or unit price payment item, shall be included in the listed lump sum item most closely associated with the work involved. The lump sum price and payment made for each item listed shall constitute full compensation for furnishing all plant, labor, materials, and equipment, and performing any associated Contractor quality control, environmental protection, meeting safety requirements, tests and reports, and for performing all work required for which separate payment is not otherwise provided.

1.3.1 Mobilization and Demobilization

1.3.1.1 Payment

Payment will be made for costs associated with mobilization and demobilization, as defined in Special Clause PAYMENT FOR MOBILIZATION AND DEMOBILIZATION.

1.3.1.2 Unit of Measure

Unit of measure: lump sum.

1.3.2 Structure # 1

1.3.2.1 Payment

Payment will be made for costs associated with operations necessary for construction of the structure at Station XX+XX.

1.3.2.2 Unit of Measure

Unit of measure: lump sum.

1.3.3 Structure # 2

1.3.3.1 Payment

Payment will be made for costs associated with operations necessary for construction of the structure at Station YY+YY.

1.3.3.2 Unit of Measure

Unit of measure: lump sum.

1.4 UNIT PRICE PAYMENT ITEMS

Payment items for the work of this contract on which the contract unit price payments will be made are listed in the BIDDING SCHEDULE and described below. The unit price and payment made for each item listed shall constitute full compensation for furnishing all plant, labor, materials, and equipment, and performing any associated Contractor quality control, environmental protection, meeting safety requirements, tests and reports, and for performing all work required for each of the unit price items.

1.4.1 Excavation

1.4.1.1 Payment

Payment will be made for costs associated with excavation for the channel and for the structure, which includes performing required excavation and other operations incidental thereto, Contractor-furnished disposal area(s) and disposition of excess excavated material and unsuitable and frozen materials.

1.4.1.2 Measurement

The total quantity of excavated material for which payment will be made will be the theoretical quantity between the ground surface as determined by a survey and the grade and slope of the theoretical cross sections indicated. No allowance will be made for overdepth excavation or for the removal of any material outside the required slope lines unless authorized.

1.4.1.3 Unit of Measure

Unit of measure: cubic yard.

1.4.2 R 200 Riprap

1.4.2.1 Payment

Payment will be made for costs associated with furnishing, transporting, stockpiling (if applicable), placing, and constructing the stone protection as specified.

1.4.2.2 Measurement

Riprap will be measured for payment by the ton (2,000 pounds) by weighing each truckload to the nearest 0.1 ton, and the final quantity of [each truckload] [the whole sum] will be rounded to the nearest whole ton. The riprap will be measured for payment by being weighed on approved scales before being placed in the work. Quarry weights will not be accepted. Scales shall be of sufficient length to permit simultaneous weighing all axle loads and shall be inspected, tested and sealed as directed to assure accuracy with 0.5 percent throughout the range of the scales. The scales, located at the site of the work, shall be certified as to accuracy by an acceptable scales company representative prior to weighing any riprap. Scales will be checked and certified before riprap hauling and rechecked and recertified whenever a variance is suspected. The Contractor shall furnish the scales. If commercial scales are readily available in close proximity 10 miles of site of work, the Contracting Officer may approve the use of the scales. The riprap shall be weighed in the presence of the Government representative. The Contracting Officer may elect to accept certified weight certificates furnished by a public weighmaster in lieu of scale weights at the jobsite.

1.4.2.3 Unit of Measure

Unit of measure: ton (2,000 pounds).

1.4.3 Deformed Steel Bars for Concrete Reinforcement

1.4.3.1 Payment

Payment will be made for costs associated with furnishing, transporting, delivering, and placing deformed steel bars for concrete reinforcement, which includes steel in laps as indicated or as required. No payment will be made for the additional steel in laps which are authorized for the convenience of the Contractor. No separate payment will be made for accessories and payment shall be included in the contract unit price for the items of work to which the accessories are incidental.

1.4.3.2 Measurement

The measured lengths of deformed steel bars for concrete reinforcement will be converted to weights for the size of bars listed by the use of the nominal weights per lineal foot specified in ASTM A 615/A 615M.

1.4.3.3 Unit of Measure

Unit of measure: per pound in place.

1.4.4 Bituminous Base Course

1.4.4.1 Payment

Payment will be made for costs associated with bituminous base course, which includes preparing and reconditioning the underlying layer, and other incidentals necessary to complete the work required by Section 02713 BITUMINOUS BASE COURSE. No payment will be made for defective areas until corrected.

1.4.4.2 Measurement

Bituminous Base Course will be measured for payment based upon the number of tons (2,000 pounds) of bituminous mixture used in the accepted work. Bituminous mixture shall be weighed after mixing, and no deductions will be made for the weight of bituminous material incorporated in the mix. Quantities of paving mixtures called for in bid schedule are based on aggregates having a specific gravity of 2.65 as determined according to apparent specific gravity paragraphs in ASTM C 127 and ASTM C 128. Correction in the tonnage of bituminous base course mixtures shall be made to compensate for the difference in the tonnage of mixtures used in the project, when specific gravities of aggregates used are more than 2.70 and less than 2.60. The tonnage paid for shall be the number of tons used, proportionately corrected for specific gravities using 2.65 as the base correctional factor.

1.4.4.3 Unit of Measure

Unit of measure: ton (2,000 pounds).

1.4.5 Bituminous Materials

1.4.5.1 Payment

Payment will be made for costs associated with bituminous materials.

1.4.5.2 Measurement

Bituminous Materials will be measured for payment based upon the number of gallons of the material used in the accepted work, corrected to gallons at 60 degrees F in accordance with ASTM D 1250. tons 2,000 pounds of the material used in the accepted work.

1.4.5.3 Unit of Measure

Unit of measure: tons (2,000 pounds).

PART 2 PRODUCTS (Not Applicable)

PART 3 EXECUTION (Not Applicable)

-- End of Section --

SECTION TABLE OF CONTENTS

DIVISION 01 - GENERAL REQUIREMENTS

SECTION 01312A

QUALITY CONTROL SYSTEM (QCS)

1.1 GENERAL
1.1.1 Correspondence and Electronic Communications
1.1.2 Other Factors
1.2 QCS SOFTWARE
1.3 SYSTEM REQUIREMENTS
1.4 RELATED INFORMATION
1.4.1 QCS User Guide
1.4.2 Contractor Quality Control(CQC) Training
1.5 CONTRACT DATABASE
1.6 DATABASE MAINTENANCE
1.6.1 Administration
1.6.1.1 Contractor Information
1.6.1.2 Subcontractor Information
1.6.1.3 Correspondence
1.6.1.4 Equipment
1.6.1.5 Management Reporting
1.6.2 Finances
1.6.2.1 Pay Activity Data
1.6.2.2 Payment Requests
1.6.3 Quality Control (QC)
1.6.3.1 Daily Contractor Quality Control (CQC) Reports.
1.6.3.2 Deficiency Tracking.
1.6.3.3 Three-Phase Control Meetings
1.6.3.4 Accident/Safety Tracking.
1.6.3.5 Features of Work
1.6.3.6 QC Requirements
1.6.4 Submittal Management
1.6.5 Schedule
1.6.6 Import/Export of Data
1.7 IMPLEMENTATION
1.8 DATA SUBMISSION VIA COMPUTER DISKETTE OR CD-ROM
1.8.1 File Medium
1.8.2 Disk or CD-ROM Labels
1.8.3 File Names
1.9 MONTHLY COORDINATION MEETING
1.10 NOTIFICATION OF NONCOMPLIANCE

-- End of Section Table of Contents --

SECTION 01312A

QUALITY CONTROL SYSTEM (QCS)

1.1 GENERAL

The Government will use the Resident Management System for Windows (RMS) to assist in its monitoring and administration of this contract. The Contractor shall use the Government-furnished Construction Contractor Module of RMS, referred to as QCS, to record, maintain, and submit various information throughout the contract period. This joint Government-Contractor use of RMS and QCS will facilitate electronic exchange of information and overall management of the contract. QCS provides the means for the Contractor to input, track, and electronically share information with the Government in the following areas:

Administration
Finances
Quality Control
Submittal Monitoring
Scheduling
Import/Export of Data

1.1.1 Correspondence and Electronic Communications

For ease and speed of communications, both Government and Contractor will, to the maximum extent feasible, exchange correspondence and other documents in electronic format. Correspondence, pay requests and other documents comprising the official contract record shall also be provided in paper format, with signatures and dates where necessary. Paper documents will govern, in the event of discrepancy with the electronic version.

1.1.2 Other Factors

Particular attention is directed to Contract Clause, "Schedules for Construction Contracts", Contract Clause, "Payments", Section 01320A, PROJECT SCHEDULE, Section 01330, SUBMITTAL PROCEDURES, and Section 01451A, CONTRACTOR QUALITY CONTROL, which have a direct relationship to the reporting to be accomplished through QCS. Also, there is no separate payment for establishing and maintaining the QCS database; all costs associated therewith shall be included in the contract pricing for the work.

1.2 QCS SOFTWARE

QCS is a Windows-based program that can be run on a stand-alone personal computer or on a network. The Government will make available the QCS software to the Contractor after award of the construction contract. Prior to the Pre-Construction Conference, the Contractor shall be responsible to download, install and use the latest version of the QCS software from the Government's RMS Internet Website. Upon specific justification and request by the Contractor, the Government can provide QCS on 3-1/2 inch high-density diskettes or CD-ROM. Any program updates of QCS will be made available to the Contractor via the Government RMS Website as they become available.

1.3 SYSTEM REQUIREMENTS

The following listed hardware and software is the minimum system configuration that the Contractor shall have to run QCS:

Hardware

IBM-compatible PC with 200 MHz Pentium or higher processor

32+ MB RAM

4 GB hard drive disk space for sole use by the QCS system

3 1/2 inch high-density floppy drive

Compact disk (CD) Reader

Color monitor

Laser printer compatible with HP LaserJet III or better, with minimum 4 MB installed memory.

Connection to the Internet, minimum 28 BPS

Software

MS Windows 95 or newer version operating system (MS Windows NT 4.0 or newer is recommended)

Word Processing software compatible with MS Word 97 or newer

Internet browser

The Contractor's computer system shall be protected by virus protection software that is regularly upgraded with all issued manufacturer's updates throughout the life of the contract.

Electronic mail (E-mail) compatible with MS Outlook

1.4 RELATED INFORMATION

1.4.1 QCS User Guide

After contract award, the Contractor shall download instructions for the installation and use of QCS from the Government RMS Internet Website; the Contractor can obtain the current address from the Government. In case of justifiable difficulties, the Government will provide the Contractor with a CD-ROM containing these instructions.

1.4.2 Contractor Quality Control(CQC) Training

The use of QCS will be discussed with the Contractor's QC System Manager during the mandatory CQC Training class.

1.5 CONTRACT DATABASE

Prior to the pre-construction conference, the Government shall provide the Contractor with basic contract award data to use for QCS. The Government will provide data updates to the Contractor as needed, generally by files attached to E-mail. These updates will generally consist of submittal reviews, correspondence status, QA comments, and other administrative and QA data.

1.6 DATABASE MAINTENANCE

The Contractor shall establish, maintain, and update data for the contract in the QCS database throughout the duration of the contract. The Contractor shall establish and maintain the QCS database at the Contractor's site office. Data updates to the Government shall be submitted by E-mail with file attachments, e.g., daily reports, schedule updates, payment requests. If permitted by the Contracting Officer, a data diskette or CD-ROM may be used instead of E-mail (see Paragraph DATA SUBMISSION VIA COMPUTER DISKETTE OR CD-ROM). The QCS database typically shall include current data on the following items:

1.6.1 Administration

1.6.1.1 Contractor Information

The database shall contain the Contractor's name, address, telephone numbers, management staff, and other required items. Within 14 calendar days of receipt of QCS software from the Government, the Contractor shall deliver Contractor administrative data in electronic format via E-mail.

1.6.1.2 Subcontractor Information

The database shall contain the name, trade, address, phone numbers, and other required information for all subcontractors. A subcontractor must be listed separately for each trade to be performed. Each subcontractor/trade shall be assigned a unique Responsibility Code, provided in QCS. Within 14 calendar days of receipt of QCS software from the Government, the Contractor shall deliver subcontractor administrative data in electronic format via E-mail.

1.6.1.3 Correspondence

All Contractor correspondence to the Government shall be identified with a serial number. Correspondence initiated by the Contractor's site office shall be prefixed with "S". Letters initiated by the Contractor's home (main) office shall be prefixed with "H". Letters shall be numbered starting from 0001. (e.g., H-0001 or S-0001). The Government's letters to the Contractor will be prefixed with "C".

1.6.1.4 Equipment

The Contractor's QCS database shall contain a current list of equipment planned for use or being used on the jobsite, including the most recent and planned equipment inspection dates.

1.6.1.5 Management Reporting

QCS includes a number of reports that Contractor management can use to track the status of the project. The value of these reports is reflective of the quality of the data input, and is maintained in the various sections

of QCS. Among these reports are: Progress Payment Request worksheet, QA/QC comments, Submittal Register Status, Three-Phase Inspection checklists.

1.6.2 Finances

1.6.2.1 Pay Activity Data

The QCS database shall include a list of pay activities that the Contractor shall develop in conjunction with the construction schedule. The sum of all pay activities shall be equal to the total contract amount, including modifications. Pay activities shall be grouped by Contract Line Item Number (CLIN), and the sum of the activities shall equal the amount of each CLIN. The total of all CLINs equals the Contract Amount.

1.6.2.2 Payment Requests

All progress payment requests shall be prepared using QCS. The Contractor shall complete the payment request worksheet and include it with the payment request. The work completed under the contract, measured as percent or as specific quantities, shall be updated at least monthly. After the update, the Contractor shall generate a payment request report using QCS. The Contractor shall submit the payment requests with supporting data by E-mail with file attachment(s). If permitted by the Contracting Officer, a data diskette may be used instead of E-mail. A signed paper copy of the approved payment request is also required, which shall govern in the event of discrepancy with the electronic version.

1.6.3 Quality Control (QC)

QCS provides a means to track implementation of the 3-phase QC Control System, prepare daily reports, identify and track deficiencies, document progress of work, and support other contractor QC requirements. The Contractor shall maintain this data on a daily basis. Entered data will automatically output to the QCS generated daily report. The Contractor shall provide the Government a Contractor Quality Control (CQC) Plan within the time required in Section 01451A, CONTRACTOR QUALITY CONTROL. Within seven calendar days of Government acceptance, the Contractor shall submit a data diskette or CD-ROM reflecting the information contained in the accepted CQC Plan: schedule, pay activities, features of work, submittal register, QC requirements, and equipment list.

1.6.3.1 Daily Contractor Quality Control (CQC) Reports.

QCS includes the means to produce the Daily CQC Report. The Contractor may use other formats to record basic QC data. However, the Daily CQC Report generated by QCS shall be the Contractor's official report. Data from any supplemental reports by the Contractor shall be summarized and consolidated onto the QCS-generated Daily CQC Report. Daily CQC Reports shall be submitted as required by Section 01451A, CONTRACTOR QUALITY CONTROL. Reports shall be submitted electronically to the Government using E-mail or diskette within 24 hours after the date covered by the report. Use of either mode of submittal shall be coordinated with the Government representative. The Contractor shall also provide the Government a signed, printed copy of the daily CQC report.

1.6.3.2 Deficiency Tracking.

The Contractor shall use QCS to track deficiencies. Deficiencies identified by the Contractor will be numerically tracked using QC punch

list items. The Contractor shall maintain a current log of its QC punch list items in the QCS database. The Government will log the deficiencies it has identified using its QA punch list items. The Government's QA punch list items will be included in its export file to the Contractor. The Contractor shall regularly update the correction status of both QC and QA punch list items.

1.6.3.3 Three-Phase Control Meetings

The Contractor shall maintain scheduled and actual dates and times of preparatory and initial control meetings in QCS.

1.6.3.4 Accident/Safety Tracking.

The Government will issue safety comments, directions, or guidance whenever safety deficiencies are observed. The Government's safety comments will be included in its export file to the Contractor. The Contractor shall regularly update the correction status of the safety comments. In addition, the Contractor shall utilize QCS to advise the Government of any accidents occurring on the jobsite. This brief supplemental entry is not to be considered as a substitute for completion of mandatory reports, e.g., ENG Form 3394 and OSHA Form 200.

1.6.3.5 Features of Work

The Contractor shall include a complete list of the features of work in the QCS database. A feature of work may be associated with multiple pay activities. However, each pay activity (see subparagraph "Pay Activity Data" of paragraph "Finances") will only be linked to a single feature of work.

1.6.3.6 QC Requirements

The Contractor shall develop and maintain a complete list of QC testing, transferred and installed property, and user training requirements in QCS. The Contractor shall update all data on these QC requirements as work progresses, and shall promptly provide this information to the Government via QCS.

1.6.4 Submittal Management

The Government will provide the initial submittal register, ENG Form 4288, SUBMITTAL REGISTER, in electronic format. Thereafter, the Contractor shall maintain a complete list of all submittals, including completion of all data columns. Dates on which submittals are received and returned by the Government will be included in its export file to the Contractor. The Contractor shall use QCS to track and transmit all submittals. ENG Form 4025, submittal transmittal form, and the submittal register update, ENG Form 4288, shall be produced using QCS. RMS will be used to update, store and exchange submittal registers and transmittals, but will not be used for storage of actual submittals.

1.6.5 Schedule

The Contractor shall develop a construction schedule consisting of pay activities, in accordance with Contract Clause "Schedules for Construction Contracts", or Section 01320A, PROJECT SCHEDULE, as applicable. This schedule shall be input and maintained in the QCS database either manually or by using the Standard Data Exchange Format (SDEF) (see Section 01320A

PROJECT SCHEDULE). The updated schedule data shall be included with each pay request submitted by the Contractor.

1.6.6 Import/Export of Data

QCS includes the ability to export Contractor data to the Government and to import submittal register and other Government-provided data, and schedule data using SDEF.

1.7 IMPLEMENTATION

Contractor use of QCS as described in the preceding paragraphs is mandatory. The Contractor shall ensure that sufficient resources are available to maintain its QCS database, and to provide the Government with regular database updates. QCS shall be an integral part of the Contractor's management of quality control.

1.8 DATA SUBMISSION VIA COMPUTER DISKETTE OR CD-ROM

The Government-preferred method for Contractor's submission of updates, payment requests, correspondence and other data is by E-mail with file attachment(s). For locations where this is not feasible, the Contracting Officer may permit use of computer diskettes or CD-ROM for data transfer. Data on the disks or CDs shall be exported using the QCS built-in export function. If used, diskettes and CD-ROMs will be submitted in accordance with the following:

1.8.1 File Medium

The Contractor shall submit required data on 3-1/2 inch double-sided high-density diskettes formatted to hold 1.44 MB of data, capable of running under Microsoft Windows 95 or newer. Alternatively, CD-ROMs may be used. They shall conform to industry standards used in the United States. All data shall be provided in English.

1.8.2 Disk or CD-ROM Labels

The Contractor shall affix a permanent exterior label to each diskette and CD-ROM submitted. The label shall indicate in English, the QCS file name, full contract number, contract name, project location, data date, name and telephone number of person responsible for the data.

1.8.3 File Names

The Government will provide the file names to be used by the Contractor with the QCS software.

1.9 MONTHLY COORDINATION MEETING

The Contractor shall update the QCS database each workday. At least monthly, the Contractor shall generate and submit an export file to the Government with schedule update and progress payment request. As required in Contract Clause "Payments", at least one week prior to submittal, the Contractor shall meet with the Government representative to review the planned progress payment data submission for errors and omissions. The Contractor shall make all required corrections prior to Government acceptance of the export file and progress payment request. Payment requests accompanied by incomplete or incorrect data submittals will be returned. The Government will not process progress payments until an

acceptable QCS export file is received.

1.10 NOTIFICATION OF NONCOMPLIANCE

The Contracting Officer will notify the Contractor of any detected noncompliance with the requirements of this specification. The Contractor shall take immediate corrective action after receipt of such notice. Such notice, when delivered to the Contractor at the work site, shall be deemed sufficient for the purpose of notification.

-- End of Section --

SECTION TABLE OF CONTENTS

DIVISION 01 - GENERAL REQUIREMENTS

SECTION 01320A

PROJECT SCHEDULE

PART 1 GENERAL

1.1 REFERENCES
1.2 QUALIFICATIONS

PART 2 PRODUCTS (Not Applicable)

PART 3 EXECUTION

3.1 GENERAL REQUIREMENTS
3.2 BASIS FOR PAYMENT
3.3 PROJECT SCHEDULE
3.3.1 Use of the Critical Path Method
3.3.2 Level of Detail Required
3.3.2.1 Activity Durations
3.3.2.2 Procurement Activities
3.3.2.3 Critical Activities
3.3.2.4 Government Activities
3.3.2.5 Responsibility
3.3.2.6 Work Areas
3.3.2.7 Modification or Claim Number
3.3.2.8 Bid Item
3.3.2.9 Phase of Work
3.3.2.10 Category of Work
3.3.2.11 Feature of Work
3.3.3 Scheduled Project Completion
3.3.3.1 Project Start Date
3.3.3.2 Constraint of Last Activity
3.3.3.3 Early Project Completion
3.3.4 Interim Completion Dates
3.3.4.1 Start Phase
3.3.4.2 End Phase
3.3.4.3 Phase X
3.3.5 Default Progress Data Disallowed
3.3.6 Out-of-Sequence Progress
3.3.7 Negative Lags
3.4 PROJECT SCHEDULE SUBMISSIONS
3.4.1 Preliminary Project Schedule Submission
3.4.2 Initial Project Schedule Submission
3.4.3 Periodic Schedule Updates
3.4.4 Standard Activity Coding Dictionary
3.5 SUBMISSION REQUIREMENTS
3.5.1 Data Disks
3.5.1.1 File Medium
3.5.1.2 Disk Label
3.5.1.3 File Name
3.5.2 Narrative Report

3.5.3 Approved Changes Verification
3.5.4 Schedule Reports
3.5.4.1 Activity Report
3.5.4.2 Logic Report
3.5.4.3 Total Float Report
3.5.4.4 Earnings Report
3.5.5 Network Diagram
3.5.5.1 Continuous Flow
3.5.5.2 Project Milestone Dates
3.5.5.3 Critical Path
3.5.5.4 Banding
3.5.5.5 S-Curves
3.6 PERIODIC PROGRESS MEETINGS
3.6.1 Meeting Attendance
3.6.2 Update Submission Following Progress Meeting
3.6.3 Progress Meeting Contents
3.6.3.1 Start and Finish Dates
3.6.3.2 Time Completion
3.6.3.3 Cost Completion
3.6.3.4 Logic Changes
3.6.3.5 Other Changes
3.7 REQUESTS FOR TIME EXTENSIONS
3.7.1 Justification of Delay
3.7.2 Submission Requirements
3.7.3 Additional Submission Requirements
3.8 DIRECTED CHANGES
3.9 OWNERSHIP OF FLOAT

-- End of Section Table of Contents --

SECTION 01320A

PROJECT SCHEDULE

PART 1 GENERAL

1.1 REFERENCES

The publications listed below form a part of the specification to the extent referenced. The publications are referenced in the text by basic designation only.

U.S. ARMY CORPS OF ENGINEERS (USACE)

ER 1-1-11	(1995) Progress, Schedules, and Network Analysis Systems

1.2 QUALIFICATIONS

The Contractor shall designate an authorized representative who shall be responsible for the preparation of all required project schedule reports.

PART 2 PRODUCTS (Not Applicable)

PART 3 EXECUTION

3.1 GENERAL REQUIREMENTS

Pursuant to the Contract Clause, SCHEDULE FOR CONSTRUCTION CONTRACTS, a Project Schedule as described below shall be prepared. The scheduling of construction shall be the responsibility of the Contractor. Contractor management personnel shall actively participate in its development. Subcontractors and suppliers working on the project shall also contribute in developing and maintaining an accurate Project Schedule. The approved Project Schedule shall be used to measure the progress of the work, to aid in evaluating time extensions, and to provide the basis of all progress payments.

3.2 BASIS FOR PAYMENT

The schedule shall be the basis for measuring Contractor progress. Lack of an approved schedule or scheduling personnel will result in an inability of the Contracting Officer to evaluate Contractor's progress for the purposes of payment. Failure of the Contractor to provide all information, as specified below, shall result in the disapproval of the entire Project Schedule submission and the inability of the Contracting Officer to evaluate Contractor progress for payment purposes. In the case where Project Schedule revisions have been directed by the Contracting Officer and those revisions have not been included in the Project Schedule, the Contracting Officer may hold retainage up to the maximum allowed by contract, each payment period, until revisions to the Project Schedule have been made.

3.3 PROJECT SCHEDULE

The computer software system utilized by the Contractor to produce the Project Schedule shall be capable of providing all requirements of this specification. Failure of the Contractor to meet the requirements of this specification shall result in the disapproval of the schedule. Manual methods used to produce any required information shall require approval by the Contracting Officer.

3.3.1 Use of the Critical Path Method

The Critical Path Method (CPM) of network calculation shall be used to generate the Project Schedule. The Contractor shall provide the Project Schedule in the Precedence Diagram Method (PDM).

3.3.2 Level of Detail Required

The Project Schedule shall include an appropriate level of detail. Failure to develop or update the Project Schedule or provide data to the Contracting Officer at the appropriate level of detail, as specified by the Contracting Officer, shall result in the disapproval of the schedule. The Contracting Officer will use, but is not limited to, the following conditions to determine the appropriate level of detail to be used in the Project Schedule:

3.3.2.1 Activity Durations

Contractor submissions shall follow the direction of the Contracting Officer regarding reasonable activity durations. Reasonable durations are those that allow the progress of activities to be accurately determined between payment periods (usually less than 2 percent of all non-procurement activities' Original Durations are greater than 20 days).

3.3.2.2 Procurement Activities

Tasks related to the procurement of long lead materials or equipment shall be included as separate activities in the project schedule. Long lead materials and equipment are those materials that have a procurement cycle of over 90 days. Examples of procurement process activities include, but are not limited to: submittals, approvals, procurement, fabrication, and delivery.

3.3.2.3 Critical Activities

The following activities shall be listed as separate line activities on the Contractor's project schedule:

a. Submission and approval of mechanical/electrical layout drawings.

b. Submission and approval of O & M manuals.

c. Submission and approval of as-built drawings.

d. Submission and approval of 1354 data and installed equipment lists.

e. Submission and approval of testing and air balance (TAB).

f. Submission of TAB specialist design review report.

g. Submission and approval of fire protection specialist.

h. Submission and approval of testing and balancing of HVAC plus commissioning plans and data.

i. Air and water balance dates.

j. HVAC commissioning dates.

k. Controls testing plan.

l. Controls testing.

m. Performance Verification testing.

n. Other systems testing, if required.

o. Prefinal inspection.

p. Correction of punchlist from prefinal inspection.

q. Final inspection.

3.3.2.4 Government Activities

Government and other agency activities that could impact progress shall be shown. These activities include, but are not limited to: approvals, inspections, utility tie-in, Government Furnished Equipment (GFE) and Notice to Proceed (NTP) for phasing requirements.

3.3.2.5 Responsibility

All activities shall be identified in the project schedule by the party responsible to perform the work. Responsibility includes, but is not limited to, the subcontracting firm, contractor work force, or government agency performing a given task. Activities shall not belong to more than one responsible party. The responsible party for each activity shall be identified by the Responsibility Code.

3.3.2.6 Work Areas

All activities shall be identified in the project schedule by the work area in which the activity occurs. Activities shall not be allowed to cover more than one work area. The work area of each activity shall be identified by the Work Area Code.

3.3.2.7 Modification or Claim Number

Any activity that is added or changed by contract modification or used to justify claimed time shall be identified by a mod or claim code that changed the activity. Activities shall not belong to more than one modification or claim item. The modification or claim number of each activity shall be identified by the Mod or Claim Number. Whenever possible, changes shall be added to the schedule by adding new activities. Existing activities shall not normally be changed to reflect modifications.

3.3.2.8 Bid Item

All activities shall be identified in the project schedule by the Bid Item to which the activity belongs. An activity shall not contain work in more than one bid item. The bid item for each appropriate activity shall be

identified by the Bid Item Code.

3.3.2.9 Phase of Work

All activities shall be identified in the project schedule by the phases of work in which the activity occurs. Activities shall not contain work in more than one phase of work. The project phase of each activity shall be by the unique Phase of Work Code.

3.3.2.10 Category of Work

All Activities shall be identified in the project schedule according to the category of work which best describes the activity. Category of work refers, but is not limited, to the procurement chain of activities including such items as submittals, approvals, procurement, fabrication, delivery, installation, start-up, and testing. The category of work for each activity shall be identified by the Category of Work Code.

3.3.2.11 Feature of Work

All activities shall be identified in the project schedule according to the feature of work to which the activity belongs. Feature of work refers, but is not limited to, a work breakdown structure for the project. The feature of work for each activity shall be identified by the Feature of Work Code.

3.3.3 Scheduled Project Completion

The schedule interval shall extend from NTP to the contract completion date.

3.3.3.1 Project Start Date

The schedule shall start no earlier than the date on which the NTP was acknowledged. The Contractor shall include as the first activity in the project schedule an activity called "Start Project". The "Start Project" activity shall have an "ES" constraint date equal to the date that the NTP was acknowledged, and a zero day duration.

3.3.3.2 Constraint of Last Activity

Completion of the last activity in the schedule shall be constrained by the contract completion date. Calculation on project updates shall be such that if the early finish of the last activity falls after the contract completion date, then the float calculation shall reflect a negative float on the critical path. The Contractor shall include as the last activity in the project schedule an activity called "End Project". The "End Project" activity shall have an "LF" constraint date equal to the completion date for the project, and a zero day duration.

3.3.3.3 Early Project Completion

In the event the project schedule shows completion of the project prior to the contract completion date, the Contractor shall identify those activities that have been accelerated and/or those activities that are scheduled in parallel to support the Contractor's "early" completion. Contractor shall specifically address each of the activities noted in the narrative report at every project schedule update period to assist the Contracting Officer in evaluating the Contractor's ability to actually complete prior to the contract period.

3.3.4 Interim Completion Dates

Contractually specified interim completion dates shall also be constrained to show negative float if the early finish date of the last activity in that phase falls after the interim completion date.

3.3.4.1 Start Phase

The Contractor shall include as the first activity for a project phase an activity called "Start Phase X" where "X" refers to the phase of work. The "Start Phase X" activity shall have an "ES" constraint date equal to the date on which the NTP was acknowledged, and a zero day duration.

3.3.4.2 End Phase

The Contractor shall include as the last activity in a project phase an activity called "End Phase X" where "X" refers to the phase of work. The "End Phase X" activity shall have an "LF" constraint date equal to the completion date for the project, and a zero day duration.

3.3.4.3 Phase X

The Contractor shall include a hammock type activity for each project phase called "Phase X" where "X" refers to the phase of work. The "Phase X" activity shall be logically tied to the earliest and latest activities in the phase.

3.3.5 Default Progress Data Disallowed

Actual Start and Finish dates shall not be automatically updated by default mechanisms that may be included in CPM scheduling software systems. Actual Start and Finish dates on the CPM schedule shall match those dates provided from Contractor Quality Control Reports. Failure of the Contractor to document the Actual Start and Finish dates on the Daily Quality Control report for every in-progress or completed activity, and failure to ensure that the data contained on the Daily Quality Control reports is the sole basis for schedule updating shall result in the disapproval of the Contractor's schedule and the inability of the Contracting Officer to evaluate Contractor progress for payment purposes. Updating of the percent complete and the remaining duration of any activity shall be independent functions. Program features which calculate one of these parameters from the other shall be disabled.

3.3.6 Out-of-Sequence Progress

Activities that have posted progress without all preceding logic being satisfied (Out-of-Sequence Progress) will be allowed only on a case-by-case approval of the Contracting Officer. The Contractor shall propose logic corrections to eliminate all out of sequence progress or justify not changing the sequencing for approval prior to submitting an updated project schedule.

3.3.7 Negative Lags

Lag durations contained in the project schedule shall not have a negative value.

3.4 PROJECT SCHEDULE SUBMISSIONS

The Contractor shall provide the submissions as described below. The data disk, reports, and network diagrams required for each submission are contained in paragraph SUBMISSION REQUIREMENTS.

3.4.1 Preliminary Project Schedule Submission

The Preliminary Project Schedule, defining the Contractor's planned operations for the first 60 calendar days shall be submitted for approval within 20 calendar days after the NTP is acknowledged. The approved preliminary schedule shall be used for payment purposes not to exceed 60 calendar days after NTP.

3.4.2 Initial Project Schedule Submission

The Initial Project Schedule shall be submitted for approval within 40 calendar days after NTP. The schedule shall provide a reasonable sequence of activities which represent work through the entire project and shall be at a reasonable level of detail.

3.4.3 Periodic Schedule Updates

Based on the result of progress meetings, specified in "Periodic Progress Meetings," the Contractor shall submit periodic schedule updates. These submissions shall enable the Contracting Officer to assess Contractor's progress. If the Contractor fails or refuses to furnish the information and project schedule data, which in the judgement of the Contracting Officer or authorized representative is necessary for verifying the Contractor's progress, the Contractor shall be deemed not to have provided an estimate upon which progress payment may be made.

3.4.4 Standard Activity Coding Dictionary

The Contractor shall use the activity coding structure defined in the Standard Data Exchange Format (SDEF) in ER 1-1-11, Appendix A. This exact structure is mandatory, even if some fields are not used.

3.5 SUBMISSION REQUIREMENTS

The following items shall be submitted by the Contractor for the preliminary submission, initial submission, and every periodic project schedule update throughout the life of the project:

3.5.1 Data Disks

Two data disks containing the project schedule shall be provided. Data on the disks shall adhere to the SDEF format specified in ER 1-1-11, Appendix A.

3.5.1.1 File Medium

Required data shall be submitted on 3.5 disks, formatted to hold 1.44 MB of data, under the MS-DOS Version 5. or 6.x, unless otherwise approved by the Contracting Officer.

3.5.1.2 Disk Label

A permanent exterior label shall be affixed to each disk submitted. The label shall indicate the type of schedule (Preliminary, Initial, Update, or Change), full contract number, project name, project location, data date,

name and telephone number or person responsible for the schedule, and the MS-DOS version used to format the disk.

3.5.1.3 File Name

Each file submitted shall have a name related to either the schedule data date, project name, or contract number. The Contractor shall develop a naming convention that will ensure that the names of the files submitted are unique. The Contractor shall submit the file naming convention to the Contracting Officer for approval.

3.5.2 Narrative Report

A Narrative Report shall be provided with the preliminary, initial, and each update of the project schedule. This report shall be provided as the basis of the Contractor's progress payment request. The Narrative Report shall include: a description of activities along the 2 most critical paths, a description of current and anticipated problem areas or delaying factors and their impact, and an explanation of corrective actions taken or required to be taken. The narrative report is expected to relay to the Government, the Contractor's thorough analysis of the schedule output and its plans to compensate for any problems, either current or potential, which are revealed through that analysis.

3.5.3 Approved Changes Verification

Only project schedule changes that have been previously approved by the Contracting Officer shall be included in the schedule submission. The Narrative Report shall specifically reference, on an activity by activity basis, all changes made since the previous period and relate each change to documented, approved schedule changes.

3.5.4 Schedule Reports

The format for each activity for the schedule reports listed below shall contain: Activity Numbers, Activity Description, Original Duration, Remaining Duration, Early Start Date, Early Finish Date, Late Start Date, Late Finish Date, Total Float. Actual Start and Actual Finish Dates shall be printed for those activities in progress or completed.

3.5.4.1 Activity Report

A list of all activities sorted according to activity number.

3.5.4.2 Logic Report

A list of Preceding and Succeeding activities for every activity in ascending order by activity number. Preceeding and succeeding activities shall include all information listed above in paragraph Schedule Reports. A blank line shall be left between each activity grouping.

3.5.4.3 Total Float Report

A list of all incomplete activities sorted in ascending order of total float. Activities which have the same amount of total float shall be listed in ascending order of Early Start Dates. Completed activities shall not be shown on this report.

3.5.4.4 Earnings Report

A compilation of the Contractor's Total Earnings on the project from the NTP until the most recent Monthly Progress Meeting. This report shall reflect the Earnings of specific activities based on the agreements made in the field and approved between the Contractor and Contracting Officer at the most recent Monthly Progress Meeting. Provided that the Contractor has provided a complete schedule update, this report shall serve as the basis of determining Contractor Payment. Activities shall be grouped by bid item and sorted by activity numbers. This report shall: sum all activities in a bid item and provide a bid item percent; and complete and sum all bid items to provide a total project percent complete. The printed report shall contain, for each activity: the Activity Number, Activity Description, Original Budgeted Amount, Total Quantity, Quantity to Date, Percent Complete (based on cost), and Earnings to Date.

3.5.5 Network Diagram

The network diagram shall be required on the initial schedule submission and on monthly schedule update submissions. The network diagram shall depict and display the order and interdependence of activities and the sequence in which the work is to be accomplished. The Contracting Officer will use, but is not limited to, the following conditions to review compliance with this paragraph:

3.5.5.1 Continuous Flow

Diagrams shall show a continuous flow from left to right with no arrows from right to left. The activity number, description, duration, and estimated earned value shall be shown on the diagram.

3.5.5.2 Project Milestone Dates

Dates shall be shown on the diagram for start of project, any contract required interim completion dates, and contract completion dates.

3.5.5.3 Critical Path

The critical path shall be clearly shown.

3.5.5.4 Banding

Activities shall be grouped to assist in the understanding of the activity sequence. Typically, this flow will group activities by category of work, work area and/or responsibility.

3.5.5.5 S-Curves

Earnings curves showing projected early and late earnings and earnings to date.

3.6 PERIODIC PROGRESS MEETINGS

Progress meetings to discuss payment shall include a monthly onsite meeting or other regular intervals mutually agreed to at the preconstruction conference. During this meeting the Contractor shall describe, on an activity by activity basis, all proposed revisions and adjustments to the project schedule required to reflect the current status of the project. The Contracting Officer will approve activity progress, proposed revisions, and adjustments as appropriate.

3.6.1 Meeting Attendance

The Contractor's Project Manager and Scheduler shall attend the regular progress meeting.

3.6.2 Update Submission Following Progress Meeting

A complete update of the project schedule containing all approved progress, revisions, and adjustments, based on the regular progress meeting, shall be submitted not later than 4 working days after the monthly progress meeting.

3.6.3 Progress Meeting Contents

Update information, including Actual Start Dates, Actual Finish Dates, Remaining Durations, and Cost-to-Date shall be subject to the approval of the Contracting Officer. As a minimum, the Contractor shall address the following items on an activity by activity basis during each progress meeting.

3.6.3.1 Start and Finish Dates

The Actual Start and Actual Finish dates for each activity currently in-progress or completed .

3.6.3.2 Time Completion

The estimated Remaining Duration for each activity in-progress. Time-based progress calculations shall be based on Remaining Duration for each activity.

3.6.3.3 Cost Completion

The earnings for each activity started. Payment will be based on earnings for each in-progress or completed activity. Payment for individual activities will not be made for work that contains quality defects. A portion of the overall project amount may be retained based on delays of activities.

3.6.3.4 Logic Changes

All logic changes pertaining to NTP on change orders, change orders to be incorporated into the schedule, contractor proposed changes in work sequence, corrections to schedule logic for out-of-sequence progress, lag durations, and other changes that have been made pursuant to contract provisions shall be specifically identified and discussed.

3.6.3.5 Other Changes

Other changes required due to delays in completion of any activity or group of activities include: 1) delays beyond the Contractor's control, such as strikes and unusual weather. 2) delays encountered due to submittals, Government Activities, deliveries or work stoppages which make re-planning the work necessary. 3) Changes required to correct a schedule which does not represent the actual or planned prosecution and progress of the work.

3.7 REQUESTS FOR TIME EXTENSIONS

In the event the Contractor requests an extension of the contract

completion date, or any interim milestone date, the Contractor shall furnish the following for a determination as to whether or not the Contractor is entitled to an extension of time under the provisions of the contract: justification, project schedule data, and supporting evidence as the Contracting Officer may deem necessary. Submission of proof of delay, based on revised activity logic, duration, and costs (updated to the specific date that the delay occurred) is obligatory to any approvals.

3.7.1 Justification of Delay

The project schedule shall clearly display that the Contractor has used, in full, all the float time available for the work involved with this request. The Contracting Officer's determination as to the number of allowable days of contract extension shall be based upon the project schedule updates in effect for the time period in question, and other factual information. Actual delays that are found to be caused by the Contractor's own actions, which result in the extension of the schedule, will not be a cause for a time extension to the contract completion date.

3.7.2 Submission Requirements

The Contractor shall submit a justification for each request for a change in the contract completion date of under 2 weeks based upon the most recent schedule update at the time of the NTP or constructive direction issued for the change. Such a request shall be in accordance with the requirements of other appropriate Contract Clauses and shall include, as a minimum:

a. A list of affected activities, with their associated project schedule activity number.

b. A brief explanation of the causes of the change.

c. An analysis of the overall impact of the changes proposed.

d. A sub-network of the affected area.

Activities impacted in each justification for change shall be identified by a unique activity code contained in the required data file.

3.7.3 Additional Submission Requirements

For any requested time extension of over 2 weeks, the Contracting Officer may request an interim update with revised activities for a specific change request. The Contractor shall provide this disk within 4 days of the Contracting Officer's request.

3.8 DIRECTED CHANGES

If the NTP is issued for changes prior to settlement of price and/or time, the Contractor shall submit proposed schedule revisions to the Contracting Officer within 2 weeks of the NTP being issued. The proposed revisions to the schedule will be approved by the Contracting Officer prior to inclusion of those changes within the project schedule. If the Contractor fails to submit the proposed revisions, the Contracting Officer may furnish the Contractor with suggested revisions to the project schedule. The Contractor shall include these revisions in the project schedule until revisions are submitted, and final changes and impacts have been negotiated. If the Contractor has any objections to the revisions furnished by the Contracting Officer, the Contractor shall advise the

Contracting Officer within 2 weeks of receipt of the revisions. Regardless of the objections, the Contractor shall continue to update the schedule with the Contracting Officer's revisions until a mutual agreement in the revisions is reached. If the Contractor fails to submit alternative revisions within 2 weeks of receipt of the Contracting Officer's proposed revisions, the Contractor will be deemed to have concurred with the Contracting Officer's proposed revisions. The proposed revisions will then be the basis for an equitable adjustment for performance of the work.

3.9 OWNERSHIP OF FLOAT

Float available in the schedule, at any time, shall not be considered for the exclusive use of either the Government or the Contractor.

-- End of Section --

SECTION TABLE OF CONTENTS

DIVISION 01 - GENERAL REQUIREMENTS

SECTION 01330

SUBMITTAL PROCEDURES

PART 1 GENERAL

1.1 SUMMARY
1.1.1 Government-Furnished Information
1.2 DEFINITIONS
1.2.1 Submittal
1.2.2 Types of Submittals
1.3 SUBMITTAL IDENTIFICATION (SD)
1.3.1 Approving Authority
1.3.2 Work
1.4 SUBMITTALS
1.5 USE OF SUBMITTAL REGISTER [DATABASE]
1.5.1 Submittal Register
1.5.2 Contractor Use of Submittal Register
1.5.3 Approving Authority Use of Submittal Register
1.5.4 Contractor Action Code and Action Code
1.5.5 Copies Delivered to the Government
1.6 PROCEDURES FOR SUBMITTALS
1.6.1 Reviewing, Certifying, Approving Authority
1.6.2 Constraints
1.6.3 Scheduling
1.6.4 Variations
1.6.4.1 Considering Variations
1.6.4.2 Proposing Variations
1.6.4.3 Warranting That Variations Are Compatible
1.6.4.4 Review Schedule Is Modified
1.6.5 Contractor's Responsibilities
1.6.6 QC Organization Responsibilities
1.6.7 Government's Responsibilities
1.6.8 Actions Possible
1.7 FORMAT OF SUBMITTALS
1.7.1 Transmittal Form
1.7.2 Identifying Submittals
1.7.3 Format for Product Data
1.7.4 Format for Shop Drawings
1.7.5 Format of Samples
1.7.6 Format of Administrative Submittals
1.8 QUANTITY OF SUBMITTALS
1.8.1 Number of Copies of Product Data
1.8.2 Number of Copies of Shop Drawings
1.8.3 Number of Samples
1.8.4 Number of Copies of Administrative Submittals
1.9 FORWARDING SUBMITTALS
1.9.1 Shop Drawings, Product Data, and O&M Data
1.10 SUBMITTAL CLASSIFICATION
1.10.1 Government Approved
1.10.2 Information Only
1.11 APPROVED SUBMITTALS

1.12 DISAPPROVED SUBMITTALS
1.13 WITHHOLDING OF PAYMENT
1.14 GENERAL
1.15 SUBMITTAL REGISTER
1.16 SCHEDULING
1.17 TRANSMITTAL FORM (ENG FORM 4025)
1.18 SUBMITTAL PROCEDURES
1.18.1 Procedures
1.18.1.1 Resubmittals
1.18.1.2 Submittal Register Copy
1.18.2 Deviations
1.19 MECHANICAL ROOM LAYOUT DRAWINGS
1.20 SPARE PARTS LIST AND MAINTENANCE OPERATIONS MANUALS
1.21 COLOR BOARDS
1.22 AS-BUILTS
1.23 GEOTECHNICAL AND CONCRETE MATERIALS REPORT
1.24 CONTROL OF SUBMITTALS
1.25 GOVERNMENT APPROVED SUBMITTALS
1.26 INFORMATION ONLY SUBMITTALS
1.27 STAMPS

PART 2 PRODUCTS

PART 3 EXECUTION

-- End of Section Table of Contents --

SECTION 01330

SUBMITTAL PROCEDURES

PART 1 GENERAL

1.1 SUMMARY

1.1.1 Government-Furnished Information

Submittal register database and submittal management program will be delivered to the contractor. Register databasewill have the following fields completed, to the extent that will be required by the Government during subsequent usage.

Column (c): Lists specification section in which submittal is required.

Column (d): Lists each submittal description (SD No. and type, e.g. SD-04 Drawings) required in each specification section.

Column (e): Lists one principal paragraph in specification section where a material or product is specified. This listing is only to facilitate locating submitted requirements. Do not consider entries in column (e) as limiting project requirements.

Column (f): Indicate approving authority for each submittal. A "G" indicates approval by contracting officer; a blank indicates approval by QC manager.

1.2 DEFINITIONS

1.2.1 Submittal

Shop drawings, product data, samples, and administrative submittals presented for review and approval. Contract Clauses "FAR 52.236-5, Material and Workmanship," paragraph (b) and "FAR 52.236-21, Specifications and Drawings for Construction," paragraphs (d), (e), and (f) apply to all "submittals."

1.2.2 Types of Submittals

All submittals are classified as indicated in paragraph "Submittal Descriptions (SD)". Submittals also are grouped as follows:

a. Shop drawings: As used in this section, drawings, schedules, diagrams, and other data prepared specifically for this contract, by contractor or through contractor by way of subcontractor, manufacturer, supplier, distributor, or other lower tier contractor, to illustrate portion of work.

b. Product data: Preprinted material such as illustrations, standard schedules, performance charts, instructions, brochures, diagrams,

manufacturer's descriptive literature, catalog data, and other data to illustrate portion of work, but not prepared exclusively for this contract.

c. Samples: Physical examples of products, materials, equipment, assemblies, or workmanship that are physically identical to portion of work, illustrating portion of work or establishing standards for evaluating appearance of finished work or both.

d. Administrative submittals: Data presented for reviews and approval to ensure that administrative requirements of project are adequately met but not to ensure directly that work is in accordance with design concept and in compliance with contract documents.

1.3 SUBMITTAL IDENTIFICATION (SD)

Submittals required are identified by SD numbers and titles as follows:

SD-01 Preconstruction Submittals

Certificates of insurance.
Surety bonds.
List of proposed subcontractors.
List of proposed products.
Construction Progress Schedule.
Submittal schedule.
Schedule of values.
Health and safety plan.
Work plan.
Quality control plan.
Environmental protection plan.

SD-02 Shop Drawings

Drawings, diagrams and schedules specifically prepared to illustrate some portion of the work.

Diagrams and instructions from a manufacturer or fabricator for use in producing the product and as aids to the contractor for integrating the product or system into the project.

Drawings prepared by or for the contractor to show how multiple systems and interdisciplinary work will be coordinated.

SD-03 Product Data

Catalog cuts, illustrations, schedules, diagrams, performance charts, instructions and brochures illustrating size, physical appearance and other characteristics of materials or equipment for some portion of the work.

Samples of warranty language when the contract requires extended product warranties.

SD-04 Samples

Physical examples of materials, equipment or workmanship that illustrate functional and aesthetic characteristics of a material or product and establish standards by which the work can be judged.

Color samples from the manufacturer's standard line (or custom color samples if specified) to be used in selecting or approving colors for the project.

Field samples and mock-ups constructed on the project site establish standards by which the ensuring work can be judged. Includes assemblies or portions of assemblies which are to be incorporated into the project and those which will be removed at conclusion of the work.

SD-05 Design Data

Calculations, mix designs, analyses or other data pertaining to a part of work.

SD-06 Test Reports

Report signed by authorized official of testing laboratory that a material, product or system identical to the material, product or system to be provided has been tested in accord with specified requirements. (Testing must have been within three years of date of contract award for the project.)

Report which includes findings of a test required to be performed by the contractor on an actual portion of the work or prototype prepared for the project before shipment to job site.

Report which includes finding of a test made at the job site or on sample taken from the job site, on portion of work during or after installation.

Investigation reports

Daily checklists

Final acceptance test and operational test procedure

SD-07 Certificates

Statements signed by responsible officials of manufacturer of product, system or material attesting that product, system or material meets specification requirements. Must be dated after award of project contract and clearly name the project.

Document required of Contractor, or of a supplier, installer or subcontractor through Contractor, the purpose of which is to further quality of orderly progression of a portion of the work by documenting procedures, acceptability of methods or personnel qualifications.

Confined space entry permits.

SD-08 Manufacturer's Instructions

Preprinted material describing installation of a product, system or material, including special notices and Material Safety Data sheets concerning impedances, hazards and safety precautions.

SD-09 Manufacturer's Field Reports

Documentation of the testing and verification actions taken by manufacturer's representative to confirm compliance with manufacturer's standards or instructions.

Factory test reports.

SD-10 Operation and Maintenance Data

Data intended to be incorporated in operations and maintenance manuals.

SD-11 Closeout Submittals

Documentation to record compliance with technical or administrative requirements or to establish an administrative mechanism.

As-built drawings.

Special warranties.

Posted operating instructions.

Training plan.

1.3.1 Approving Authority

Person authorized to approve submittal.

1.3.2 Work

As used in this section, on- and off-site construction required by contract documents, including labor necessary to produce construction and materials, products, equipment, and systems incorporated or to be incorporated in such construction.

1.4 SUBMITTALS

Submit the following in accordance with the requirements of this section.

SD-01 Preconstruction Submittals

Submittal register; G

1.5 USE OF SUBMITTAL REGISTER [DATABASE]

Prepare and maintain submittal register, as the work progresses.[Use electronic submittal register program furnished by the Government or any other format.] Do not change data which is output in columns (c), (d), (e), and (f) as delivered by government; retain data which is output in columns (a), (g), (h), and (i) as approved.

1.5.1 Submittal Register

Submit submittal register as an electronic database, using submittals management program furnished to contractor. Submit with quality control plan and project schedule required by Section 01451A, "Quality Control" and Section 01320N, "Project Schedule." Do not change data in columns (c), (d), (e), and (f) as delivered by the government. Verify that all submittals required for project are listed and add missing submittals. Complete the following on the register database:

Column (a) Activity Number: Activity number from the project schedule.

Column (g) Contractor Submit Date: Scheduled date for approving authority to receive submittals.

Column (h) Contractor Approval Date: Date contractor needs approval of submittal.

Column (i) Contractor Material: Date that contractor needs material delivered to contractor control.

1.5.2 Contractor Use of Submittal Register

Update the following fields in the government-furnished submittal register program or equivalent fields in program utilized by contractor.

Column (b) Transmittal Number: Contractor assigned list of consecutive numbers.

Column (j) Action Code (k): Date of action used to record contractor's review when forwarding submittals to QC.

Column (l) List date of submittal transmission.

Column (q) List date approval received.

1.5.3 Approving Authority Use of Submittal Register

Update the following fields[in the government-furnished submittal register program or equivalent fields in program utilized by contractor].

Column (b).

Column (l) List date of submittal receipt.

Column (m) through (p).

Column (q) List date returned to contractor.

1.5.4 Contractor Action Code and Action Code

Entries used will be as follows (others may be prescribed by Transmittal Form):

NR - Not Received

AN - Approved as noted

A - Approved

RR - Disapproved, Revise, and Resubmit

1.5.5 Copies Delivered to the Government

Deliver one copy of submitted register updated by contractor to government with each invoice request. Deliver in electronic format, unless a paper copy is requested by contracting officer.

1.6 PROCEDURES FOR SUBMITTALS

1.6.1 Reviewing, Certifying, Approving Authority

QC organization shall be responsible for reviewing and certifying that submittals are in compliance with contract requirements. Approving authority on submittals is QC manager unless otherwise specified for specific submittal. At each "Submittal" paragraph in individual specification sections, a notation "G," following a submittal item, indicates contracting officer is approving authority for that submittal item.

1.6.2 Constraints

a. Submittals listed or specified in this contract shall conform to provisions of this section, unless explicitly stated otherwise.

b. Submittals shall be complete for each definable feature of work; components of definable feature interrelated as a system shall be submitted at same time.

c. When acceptability of a submittal is dependent on conditions, items, or materials included in separate subsequent submittals, submittal will be returned without review.

d. Approval of a separate material, product, or component does not imply approval of assembly in which item functions.

1.6.3 Scheduling

a. Coordinate scheduling, sequencing, preparing and processing of submittals with performance of work so that work will not be delayed by submittal processing. Allow for potential requirements to resubmit.

b. Except as specified otherwise, allow review period, beginning with receipt by approving authority, that includes at least 15 working days for submittals for QC manager approval and 20 working days for submittals for contracting officer approval. Period of review for submittals with contracting officer approval begins when Government receives submittal from QC organization. Period of review for each resubmittal is the same as for initial submittal.

c. For submittals requiring review by fire protection engineer, allow review period, beginning when government receives submittal from QC organization, of 30 working days for return of submittal to the contractor. Period of review for each resubmittal is the same as for initial submittal.

1.6.4 Variations

Variations from contract requirements require Government approval pursuant to contract Clause entitled "FAR 52.236-21, Specifications and Drawings for Construction" and will be considered where advantageous to government.

1.6.4.1 Considering Variations

Discussion with contracting officer prior to submission, will help ensure

functional and quality requirements are met and minimize rejections and resubmittals. When contemplating a variation which results in lower cost, consider submission of the variation as a Value Engineering Change Proposal (VECP).

1.6.4.2 Proposing Variations

When proposing variation, deliver written request to the contracting officer, with documentation of the nature and features of the variation and why the variation is desirable and beneficial to government. If lower cost is a benefit, also include an estimate of the cost saving. In addition to documentation required for variation, include the submittals required for the item. Clearly mark the proposed variation in all documentation.

1.6.4.3 Warranting That Variations Are Compatible

When delivering a variation for approval, contractor warrants that this contract has been reviewed to establish that the variation, if incorporated, will be compatible with other elements of work.

1.6.4.4 Review Schedule Is Modified

In addition to normal submittal review period, a period of 10 working days will be allowed for consideration by the Government of submittals with variations.

1.6.5 Contractor's Responsibilities

a. Determine and verify field measurements, materials, field construction criteria; review each submittal; and check and coordinate each submittal with requirements of the work and contract documents.

b. Transmit submittals to QC organization in accordance with schedule on approved Submittal Register, and to prevent delays in the work, delays to government, or delays to separate contractors.

c. Advise contracting officer of variation, as required by paragraph entitled "Variations."

d. Correct and resubmit submittal as directed by approving authority. When resubmitting disapproved transmittals or transmittals noted for resubmittal, the contractor shall provide copy of that previously submitted transmittal including all reviewer comments for use by approving authority. Direct specific attention in writing or on resubmitted submittal, to revisions not requested by approving authority on previous submissions.

e. Furnish additional copies of submittal when requested by contracting officer, to a limit of 20 copies per submittal.

f. Complete work which must be accomplished as basis of a submittal in time to allow submittal to occur as scheduled.

g. Ensure no work has begun until submittals for that work have been returned as "approved," or "approved as noted", except to the extent that a portion of work must be accomplished as basis of submittal.

1.6.6 QC Organization Responsibilities

a. Note date on which submittal was received from contractor on each submittal.

b. Review each submittal; and check and coordinate each submittal with requirements of work and contract documents.

c. Review submittals for conformance with project design concepts and compliance with contract documents.

d. Act on submittals, determining appropriate action based on QC organization's review of submittal.

(1) When QC manager is approving authority, take appropriate action on submittal from the possible actions defined in paragraph entitled, "Actions Possible."

(2) When contracting officer is approving authority or when variation has been proposed, forward submittal to Government with certifying statement or return submittal marked "not reviewed" or "revise and resubmit" as appropriate. The QC organization's review of submittal determines appropriate action.

e. Ensure that material is clearly legible.

f. Stamp each sheet of each submittal with QC certifying statement or approving statement, except that data submitted in bound volume or on one sheet printed on two sides may be stamped on the front of the first sheet only.

(1) When approving authority is contracting officer, QC organization will certify submittals forwarded to contracting officer with the following certifying statement:

"I hereby certify that the (equipment) (material) (article) shown and marked in this submittal is that proposed to be incorporated with contract Number _____, is in compliance with the contract drawings and specification, can be installed in the allocated spaces, and is submitted for Government approval.

Certified by Submittal Reviewer _____, Date _____
(Signature when applicable)

Certified by QC manager _____, Date _____"
(Signature)

(2) When approving authority is QC manager, QC manager will use the following approval statement when returning submittals to contractor as "Approved" or "Approved as Noted."

"I hereby certify that the (material) (equipment) (article) shown and marked in this submittal and proposed to be incorporated with contract Number _____, is in compliance with the contract drawings and specification, can be installed in the allocated spaces, and is _____ approved for use.

Certified by Submittal Reviewer _____, Date _____
(Signature when applicable)

Approved by QC manager _____, Date _____"
(Signature)

g. Sign certifying statement or approval statement. The person signing certifying statements shall be QC organization member designated in the approved QC plan. The signatures shall be in original ink. Stamped signatures are not acceptable.

h. Update submittal register database as submittal actions occur and maintain the submittal register at project site until final acceptance of all work by contracting officer.

i. Retain a copy of approved submittals at project site, including contractor's copy of approved samples.

1.6.7 Government's Responsibilities

When approving authority is contracting Officer, the Government will:

a. Note date on which submittal was received from QC manager, on each submittal for which the contracting officer is approving authority.

b. Review submittals for approval within scheduling period specified and only for conformance with project design concepts and compliance with contract documents.

c. Identify returned submittals with one of the actions defined in paragraph entitled "Actions Possible" and with markings appropriate for action indicated.

1.6.8 Actions Possible

Submittals will be returned with one of the following notations:

a. Submittals marked "not reviewed" will indicate submittal has been previously reviewed and approved, is not required , does not have evidence of being reviewed and approved by contractor, or is not complete. A submittal marked "not reviewed" will be returned with an explanation of the reason it is not reviewed. Resubmit submittals returned for lack of review by contractor or for being incomplete, with appropriate action, coordination, or change.

b. Submittals marked "approved" "approved as submitted" authorize contractor to proceed with work covered.

c. Submittals marked "approved as noted" or "approval except as noted; resubmission not required" authorize contractor to proceed with work as noted provided contractor takes no exception to the notations.

d. Submittals marked "revise and resubmit" or "disapproved" indicate submittal is incomplete or does not comply with design concept or requirements of the contract documents and shall be resubmitted with appropriate changes. No work shall proceed for this item until resubmittal is approved.

1.7 FORMAT OF SUBMITTALS

1.7.1 Transmittal Form

Transmit each submittal, except sample installations and sample panels, to office of approving authority. Transmit submittals with transmittal form prescribed by contracting officer and standard for project. The transmittal form shall identify contractor, indicate date of submittal, and include information prescribed by transmittal form and required in paragraph entitled "Identifying Submittals." Process transmittal forms to record actions regarding sample panels and sample installations.

1.7.2 Identifying Submittals

Identify submittals, except sample panel and sample installation, with the following information permanently adhered to or noted on each separate component of each submittal and noted on transmittal form. Mark each copy of each submittal identically, with the following:

a. Project title and location.

b. Construction contract number.

c. Section number of the specification section by which submittal is required.

d. Submittal description (SD) number of each component of submittal.

e. When a resubmission, add alphabetic suffix on submittal description, for example, SD-10A, to indicate resubmission.

f. Name, address, and telephone number of subcontractor, supplier, manufacturer and any other second tier contractor associated with submittal.

g. Product identification and location in project.

1.7.3 Format for Product Data

a. Present product data submittals for each section as a complete, bound volume. Include table of contents, listing page and catalog item numbers for product data.

b. Indicate, by prominent notation, each product which is being submitted; indicate specification section number and paragraph number to which it pertains.

c. Supplement product data with material prepared for project to satisfy submittal requirements for which product data does not exist. Identify this material as developed specifically for project.

1.7.4 Format for Shop Drawings

a. Shop drawings shall not be less than 8 1/2 by 11 inches nor more than 30 by 42 inches.

b. Present 8 1/2 by 11 inches sized shop drawings as part of the bound volume for submittals required by section. Present larger drawings in sets.

c. Include on each drawing the drawing title, number, date, and revision numbers and dates, in addition to information required in paragraph entitled "Identifying Submittals."

d. Dimension drawings, except diagrams and schematic drawings; prepare drawings demonstrating interface with other trades to scale. Shop drawing dimensions shall be the same unit of measure as indicated on the contract drawings. Identify materials and products for work shown.

1.7.5 Format of Samples

a. Furnish samples in sizes below, unless otherwise specified or unless the manufacturer has prepackaged samples of approximately same size as specified:

(1) Sample of Equipment or Device: Full size.

(2) Sample of Materials Less Than 2 by 3 inches: Built up to 8 1/2 by 11 inches.

(3) Sample of Materials Exceeding 8 1/2 by 11 inches: Cut down to 8 1/2 by 11 inches and adequate to indicate color, texture, and material variations.

(4) Sample of Linear Devices or Materials: 10 inch length or length to be supplied, if less than 10 inches. Examples of linear devices or materials are conduit and handrails.

(5) Sample of Non-Solid Materials: Pint. Examples of non-solid materials are sand and paint.

(6) Color Selection Samples: 2 by 4 inches.

(7) Sample Panel: 4 by 4 feet.

(8) Sample Installation: 100 square feet.

b. Samples Showing Range of Variation: Where variations are unavoidable due to nature of the materials, submit sets of samples of not less than three units showing extremes and middle of range.

c. Reusable Samples: Incorporate returned samples into work only if so specified or indicated. Incorporated samples shall be in undamaged condition at time of use.

d. Recording of Sample Installation: Note and preserve the notation of area constituting sample installation but remove notation at final clean up of project.

e. When color, texture or pattern is specified by naming a particular manufacturer and style, include one sample of that manufacturer and style, for comparison.

1.7.6 Format of Administrative Submittals

a. When submittal includes a document which is to be used in project or become part of project record, other than as a submittal, do not apply contractor's approval stamp to document, but to a

separate sheet accompanying document.

b. Operation and Maintenance Manual Data: Submit in accordance with Section 01781N, "Operation and Maintenance Data." Include components required in that section and the various technical sections.

1.8 QUANTITY OF SUBMITTALS

1.8.1 Number of Copies of Product Data

a. Submit six copies of submittals of product data requiring review and approval only by QC organization and seven copies of product data requiring review and approval by contracting officer. Submit three copies of submittals of product data for operation and maintenance manuals.

1.8.2 Number of Copies of Shop Drawings

Submit shop drawings in compliance with quantity requirements specified for product data.

1.8.3 Number of Samples

a. Submit two samples, or two sets of samples showing range of variation, of each required item. One approved sample or set of samples will be retained by approving authority and one will be returned to contractor.

b. Submit one sample panel. Include components listed in technical section or as directed.

c. Submit one sample installation, where directed.

d. Submit one sample of non-solid materials.

1.8.4 Number of Copies of Administrative Submittals

a. Unless otherwise specified, submit administrative submittals compliance with quantity requirements specified for product data.

b. Submit administrative submittals required under "SD-10 Operation and Maintenance Data" to conform to Section 01781N, "Operation and Maintenance Data."

1.9 FORWARDING SUBMITTALS

1.9.1 Shop Drawings, Product Data, and O&M Data

As soon as practicable after award of contract, and before procurement of fabrication, submit, except as specified otherwise, to the the shop drawings, product data and O&M Data required in the technical sections of this specification. The Architect-Engineer for this project will review and provide surveillance for the Contracting Officer to determine if Contractor-approved submittals comply with the contract requirements, and will review and approve for the Contracting Officer those submittals not permitted to be Contractor approved to determine if submittals comply with the contract requirements. One copy of the transmittal form for submittals shall be forwarded to the Resident Officer in Charge of Construction

1.10 SUBMITTAL CLASSIFICATION

Submittals are classified as follows:

1.10.1 Government Approved

Government approval is required for extensions of design, critical materials, deviations, equipment whose compatibility with the entire system must be checked, and other items as designated by the Contracting Officer. Within the terms of the Contract Clause entitled "Specifications and Drawings for Construction," they are considered to be "shop drawings."

1.10.2 Information Only

All submittals not requiring Government approval will be for information only. They are not considered to be "shop drawings" within the terms of the Contract Clause referred to above.

1.11 APPROVED SUBMITTALS

The Contracting Officer's approval of submittals shall not be construed as a complete check, but will indicate only that the general method of construction, materials, detailing and other information are satisfactory. Approval will not relieve the Contractor of the responsibility for any error which may exist, as the Contractor under the Contractor Quality Control (CQC) requirements of this contract is responsible for dimensions, the design of adequate connections and details, and the satisfactory construction of all work. After submittals have been approved by the Contracting Officer, no resubmittal for the purpose of substituting materials or equipment will be considered unless accompanied by an explanation of why a substitution is necessary.

1.12 DISAPPROVED SUBMITTALS

The Contractor shall make all corrections required by the Contracting Officer and promptly furnish a corrected submittal in the form and number of copies specified for the initial submittal. If the Contractor considers any correction indicated on the submittals to constitute a change to the contract, a notice in accordance with the Contract Clause "Changes" shall be given promptly to the Contracting Officer.

1.13 WITHHOLDING OF PAYMENT

Payment for materials incorporated in the work will not be made if required approvals have not been obtained.

1.14 GENERAL

The Contractor shall make submittals as required by the specifications. The Contracting Officer may request submittals in addition to those specified when deemed necessary to adequately describe the work covered in the respective sections. Units of weights and measures used on all submittals shall be the same as those used in the contract drawings. Each submittal shall be complete and in sufficient detail to allow ready determination of compliance with contract requirements. Prior to submittal, all items shall be checked and approved by the Contractor's Quality Control (CQC) System Manager and each item shall be stamped, signed, and dated by the CQC System Manager indicating action taken.

Proposed deviations from the contract requirements shall be clearly identified. Submittals shall include items such as: Contractor's, manufacturer's, or fabricator's drawings; descriptive literature including (but not limited to) catalog cuts, diagrams, operating charts or curves; test reports; test cylinders; samples; O&M manuals (including parts list); certifications; warranties; and other such required submittals. Submittals requiring Government approval shall be scheduled and made prior to the acquisition of the material or equipment covered thereby. Samples remaining upon completion of the work shall be picked up and disposed of in accordance with manufacturer's Material Safety Data Sheets (MSDS) and in compliance with existing laws and regulations.

1.15 SUBMITTAL REGISTER

At the end of this section is a submittal [register] [list] showing items of equipment and materials for which submittals are required by the specifications; this list may not be all inclusive and additional submittals may be required. The Contractor shall maintain a submittal register for the project in accordance with Section 01312A QUALITY CONTROL SYSTEM (QCS).

1.16 SCHEDULING

Submittals covering component items forming a system or items that are interrelated shall be scheduled to be coordinated and submitted concurrently. Certifications to be submitted with the pertinent drawings shall be so scheduled. Adequate time (a minimum of 35 calendar days exclusive of mailing time) shall be allowed and shown on the register for review and approval. No delay damages or time extensions will be allowed for time lost in late submittals. .

1.17 TRANSMITTAL FORM (ENG FORM 4025)

The sample transmittal form (ENG Form 4025) attached to this section shall be used for submitting both Government approved and information only submittals in accordance with the instructions on the reverse side of the form. These forms will be furnished to the Contractor][are included in the Quality Control System (QCS) software that the Contractor is required to use for this contract. This form shall be properly completed by filling out all the heading blank spaces and identifying each item submitted. Special care shall be exercised to ensure proper listing of the specification paragraph and/or sheet number of the contract drawings pertinent to the data submitted for each item.

1.18 SUBMITTAL PROCEDURES

Submittals shall be made as follows:

1.18.1 Procedures

Submittals required by the CONTRACT CLAUSES and other non-technical parts of the contract are not included in this section. The Contractor shall submit to the Contracting Officer: six (6) copies for approval, and four (4) copies for information only, of all shop drawings, certificates of compliance, materials, fixtures and equipment lists called for under the various headings of these specifications. These drawings, certificates and lists shall be complete and detailed and, prior to submission, must be reviewed and certified correct by the Contractor as required by the Quality Control System paragraph of the Construction Quality Control Section. If

approved by the Contracting Officer, four (4) sets of all submittals will be retained by the Contracting Officer and two (2) sets will be returned to the Contractor. Submittals for information only usually will not be returned. The Contractor is encouraged to submit paper documents that are printed/copied double-sided on recycled paper that has at least 20% postconsumer material.

1.18.1.1 Resubmittals

If a submittal is returned for correction or is not satisfactory and is disapproved by the Contracting Officer, the Contractor shall resubmit the corrected material in the same quantity, including reproducibles as specified for the original submittal for approval within 14 days after receipt by him of the disapproved material.

1.18.1.2 Submittal Register Copy

One copy of noted items on the Submittal Register shall be sent directly to the following address:

1.18.2 Deviations

For submittals which include proposed deviations requested by the Contractor, the column "variation" of ENG Form 4025 shall be checked. The Contractor shall set forth in writing the reason for any deviations and annotate such deviations on the submittal. The Government reserves the right to rescind inadvertent approval of submittals containing unnoted deviations.

1.19 MECHANICAL ROOM LAYOUT DRAWINGS

The Contractor shall submit a layout drawing, including appropriate elevations and sections as required, for each Mechanical Room showing the room arrangement he proposes for all pieces of equipment and appurtenances thereto (via., air-conditioning equipment, boilers, compressors, hot water tanks, pumps, electrical control panels, ducts, piping, etc.), that are to be located in the room. The Mechanical Room floor slab will not be placed until the complete Mechanical Room layout drawing has been submitted and approved. No payment will be made to the Contractor for any of the equipment for the room or its installation until these drawings have been approved. Mechanical Room Layout Drawings shall be identified and submitted in the manner specified for "Shop Drawings". Equipment rooms shown on the drawings are of adequate size to accommodate equipment of required capacities, as available from several manufacturers, with sufficient space left for access, servicing, removal, etc. The use of equipment items with dimensions such as to crowd the space will not be permitted.

1.20 SPARE PARTS LIST AND MAINTENANCE OPERATIONS MANUALS

Within 30 calendar days after approval of shop drawings and equipment lists, the Contractor shall submit, to the Contracting Officer, 3 copies of spare parts lists and operating and maintenance manuals as required under the various headings of these specifications.

(A) Spare parts lists shall contain the following listed information:

(1) Quantity of parts required for 120 days and one year of operation.

(2) Description of each spare part.

(3) Drawing number and shop drawing reference.

(4) Part equipment code number.

(5) Unit price of each item.

(6) Total price of all items.

(7) Procurement lead time with particular attention to long lead times.

(8) Name and address of nearest supplier.

(9) Such remarks and data as the manufacturer may consider pertinent.

(10) Complete parts list of all replaceable items.

(B) Operation, Maintenance, and Repair Manuals and Instructions:

(1) The requirements for furnishing operating, maintenance, and repair data/manuals and field instructions under this contract are specified in the Technical Specifications. The Contractor shall submit to the Contracting Officer, not later than 60 calendar days after the Notice to Proceed, an outline showing the proposed submittal date(s) of operation and maintenance manuals to be furnished the Government and the scheduled date(s) of all required field instructions to be provided by Contractor furnished personnel or manufacturer's representatives. All operation and maintenance manuals must be furnished to the Contracting Officer not later than 60 calendar days prior to turnover of the facility to the Government.

(2) Failure on the part of the Contractor to comply with requirements of this clause will result in no further payment until all required O&M data/manuals are submitted and accepted.

(3) All O&M data/manuals submittal data shall be entered in a separate section of the master submittal register.Upon completion of review of submittals requiring Government approval, the submittals will be identified as having received approval by being so stamped and dated. (4) copies of the submittal will be retained by the Contracting Officer and (2) copies of the submittal will be returned to the Contractor.

1.21 COLOR BOARDS

Five sets of color boards shall be submitted within 90 calendar days after receipt of Notice to Proceed for all projects which involve building construction or building modifications. The board shall include samples of colors and finishes of all interior surfaces such as walls, floors, and ceilings. Material shall be submitted in a standard 8-1/2 inches by 11 inches three-ring binder. Fold-outs may be employed to 25-1/2 inches by 33 inches as long as they refold within the standard binder. Actual material samples shall be displayed showing color, texture, pattern, finish,

thickness, etc., for all appearance related items where choice exists. These samples shall be large enough to indicate true patterns. However, care should be taken to present materials in proportion to that which may be installed in a given situation. Samples shall be organized by color schemes with a separate sample for each scheme. The schemes shall be coordinated by room names and numbers shown on the architectural floor plans. Colors shall be labeled with generic color names. Project title and location (Base) shall be placed in the lower right-hand corner of each module. Where special finishes such as architectural concrete, carpet, or prefinished textured metal panels are required, separate samples not less than 8 inches x 10 inches square shall be submitted with the board. If more space is needed, more than one board per set may be submitted. The Contractor shall certify that he has reviewed the color boards in detail and that they are in strict accordance with the contract drawings and specifications except as may be otherwise explicitly stated. Submittal of the color board shall not relieve the Contractor of the responsibility to submit the samples required by the Technical Specifications.

1.22 AS-BUILTS

These paragraphs describe submittal requirements for as-builts and shop drawings. All other submittals and O&M Manuals will be reviewed and submitted as per other Technical Specification Section requirements.

(A) Working As-Built Drawings(Government Approved). The Contractor shall maintain a current record of the work as actually constructed in the form of working as-built drawings. These will typically be red-line mark-ups of the construction plans. The quantity of sets to be red-lined can be found under the paragraph below, Submittal Requirements for Review and Approval. It is the Contractor's responsibility to ensure the use of the most current drawings. Subject to the approval of the Contracting Officer, a member of the Contractor's Quality Control Organization will be assigned the sole responsibility for the maintenance and currency of the as-built drawings. Any reassignment of duties concerning the maintenance of the as-built drawings will be promptly reported to the Contracting Officer. Guidelines and drafting standards for preparing working and final as-built drawings can be found on the Internet. **http://www.cbbs.spk.usace.army.mil/**. See: Contents--A-E Guidance--Construction Contractors--Preparing As-Built Drawings. Contractor will use **UserID Form** (Contents) to request access to this site. Three sets of red-line markups shall be submitted after the completion of work at 25% intervals (i.e. 25%, 50%, 75%, and 100%),for bid items, if appropriate, or with more frequent intervals as determined by the Contracting Officer, in conjunction with approval of progress payments.

(B) Final As-Built Drawings(Government Approved). The Contractor shall prepare final, record copy drawings which depict the actual conditions upon completion of construction. The deliverable required shall be in both hard copy and electronic format. The final approved submittal shall be in electronic format only. Electronic Deliverable instructions can be found on the Internet: **http://cbbs.spk.usace.army.mil/electdel.htm**. All three sets of red-line markups and one new set (hard copy bond or blue-line) of completed final as-built drawings shall be submitted for review within 10 working days prior to the pre-final inspection. If upon review, the drawings are found to contain errors and/or omissions, they shall be returned to the Contractor for corrections.

Within 15 calendar days after the final project inspection, the Contractor shall submit for approval the one copy of updated red-line mark-up CADD files depicting final as-built conditions. If upon review by the Sacramento

District, the drawings are found to contain errors and/or omissions, they shall be returned to the Contractor for corrections.

Within 45 calendar days after the final inspection, the Contractor shall transfer the final as-built drawings to the Government according to Paragraph, End-User (Customer Requirements).

1.23 GEOTECHNICAL AND CONCRETE MATERIALS REPORT

Contractor shall prepare an as constructed geotechnical and concrete materials report for project. For additional information see (Internet Address:

http://www.cbbs.usace.army.mil/net/usace-docs/eng-regs/er1110-1-1901/toc.htm).

1.24 CONTROL OF SUBMITTALS

The Contractor shall carefully control his procurement operations to ensure that each individual submittal is made on or before the Contractor scheduled submittal date shown on the approved "Submittal Register."

1.25 GOVERNMENT APPROVED SUBMITTALS

Upon completion of review of submittals requiring Government approval, the submittals will be identified as having received approval by being so stamped and dated. 4 copies of the submittal will be retained by the Contracting Officer and 2 copies of the submittal will be returned to the Contractor.

1.26 INFORMATION ONLY SUBMITTALS

Normally submittals for information only will not be returned. Approval of the Contracting Officer is not required on information only submittals. The Government reserves the right to require the Contractor to resubmit any item found not to comply with the contract. This does not relieve the Contractor from the obligation to furnish material conforming to the plans and specifications; will not prevent the Contracting Officer from requiring removal and replacement of nonconforming material incorporated in the work; and does not relieve the Contractor of the requirement to furnish samples for testing by the Government laboratory or for check testing by the Government in those instances where the technical specifications so prescribe.

1.27 STAMPS

Stamps used by the Contractor on the submittal data to certify that the submittal meets contract requirements shall be similar to the following:

```
 ____________________________________________________________________
|                              CONTRACTOR                            |
|                                                                    |
|                              (Firm Name)                           |
|                                                                    |
|                                                                    |
|                                                                    |
| _____ Approved                                                     |
|                                                                    |
|                                                                    |
| _____ Approved with corrections as noted on submittal data and/or  |
| attached sheets(s).                                                |
|                                                                    |
|                                                                    |
|                                                                    |
| SIGNATURE:  ______________________________________________________ |
|                                                                    |
| TITLE:  __________________________________________________________ |
|                                                                    |
| DATE:  ___________________________________________________________ |
|                                                                    |
|____________________________________________________________________|
```

PART 2 PRODUCTS

Not used.

PART 3 EXECUTION

Not used.

-- End of Section --

SUBMITTAL REGISTER

CONTRACT NO.

TITLE AND LOCATION
IDIQ - Asphalt and Concrete Repairs and Improvements

CONTRACTOR

ACTIVITY NO	TRANSMITTAL NO	SPEC SECT	DESCRIPTION ITEM SUBMITTED	PARAGRAPH #	CLASSIFICATION	GOVT OR A/E REVWR	CONTRACTOR: SCHEDULE DATES			CONTRACTOR ACTION			APPROVING AUTHORITY					MAILED TO CONTR/ DATE RCD FRM APPR AUTH	REMARKS
							SUBMIT	APPROVAL NEEDED BY	MATERIAL NEEDED BY	ACTION CODE	DATE OF ACTION	DATE FWD TO APPR AUTH/ DATE RCD FROM CONTR	DATE FWD TO OTHER REVIEWER	DATE RCD FROM OTH REVIEWER	ACTION CODE	DATE OF ACTION		
(a)	(b)	(c)	(d)	(e)	(f)		(g)	(h)	(i)	(j)	(k)	(l)	(m)	(n)	(o)	(p)	(q)	(r)
		01270	SD-01 Preconstruction Submittals															
			Weight Certificates	1.4.2.2														
			FIO															
		01330	SD-01 Preconstruction Submittals															
			Submittal register	1.5.1	G													
		01355	SD-01 Preconstruction Submittals															
			Environmental Protection Plan	1.7														
			GA															
			RE															
		01780A	SD-02 Shop Drawings															
			As-Built Drawings	1.2.1														
			FIO															
			SD-03 Product Data															
			As-Built Record of Equipment and	1.2.2														
			Materials															
			FO															
			Warranty Management Plan	1.3.1														
			FIO															
			Warranty Tags	1.3.5														
			Final Cleaning	1.6														
		02210	SD-01 Preconstruction Submittals															
			Permits, Certifications, and															
			Licenses															
			FIO															
			SD-08 Manufacturer's Instructions															

SUBMITTAL REGISTER

CONTRACT NO.

TITLE AND LOCATION
IDIQ - Asphalt and Concrete Repairs and Improvements

CONTRACTOR

ACTIVITY NO	TRANSMITTAL NO	SPEC SECT	DESCRIPTION ITEM SUBMITTED	PARAGRAPH #	CLASSIFICATION	GOVT OR A/E REVWR	CONTRACTOR: SCHEDULE DATES			CONTRACTOR ACTION			APPROVING AUTHORITY					MAILED TO CONTR/ DATE RCD FRM APPR AUTH	REMARKS
							SUBMIT	APPROVAL NEEDED BY	MATERIAL NEEDED BY	ACTION CODE	DATE OF ACTION	DATE FWD TO APPR AUTH/ DATE RCD FROM CONTR	DATE FWD TO OTHER REVIEWER	DATE RCD FROM OTH REVIEWER	ACTION CODE	DATE OF ACTION			
(a)	(b)	(c)	(d)	(e)	(f)		(g)	(h)	(i)	(j)	(k)	(l)	(m)	(n)	(o)	(p)	(q)	(r)	
		02210	Drilling, Sampling, and Testing																
			Plan																
			GA																
			SD-09 Manufacturer's Field																
			Reports																
			Soil Reports																
			GA																
			Drilling Log	3.13															
			GA																
			Geotextile																
			GA																
			Geotextile, Glass Mesh Grid &																
			Asphalt Sealant for Paving																
			Geotextile																
			FIO																
			Geotextile	2.1.1															
			FIO																
			Geotextile	2.1.1															
			FIO																
		02220	SD-08 Manufacturer's Instructions																
			Work Plan																
			GA																
			Materials Other Than Salable																
			Timber																
			FIO																
		02300	SD-08 Manufacturer's Instructions																

SUBMITTAL REGISTER

CONTRACT NO.

TITLE AND LOCATION
IDIQ - Asphalt and Concrete Repairs and Improvements

CONTRACTOR

ACTIVITY NO	TRANSMITTAL NO	SPEC SECT	DESCRIPTION ITEM SUBMITTED	PARAGRAPH #	CLASSIFICATION	GOVT OR A/E REVWR	CONTRACTOR: SCHEDULE DATES			CONTRACTOR ACTION			APPROVING AUTHORITY					
							SUBMIT	APPROVAL NEEDED BY	MATERIAL NEEDED BY	ACTION CODE	DATE OF ACTION	DATE FWD TO APPR AUTH/ DATE RCD FROM CONTR	DATE FWD TO OTHER REVIEWER	DATE RCD FROM OTH REVIEWER	ACTION CODE	DATE OF ACTION	MAILED TO CONTR/ DATE RCD FRM APPR AUTH	REMARKS
(a)	(b)	(c)	(d)	(e)	(f)		(g)	(h)	(i)	(j)	(k)	(l)	(m)	(n)	(o)	(p)	(q)	(r)
		02300	Earthwork															
			GA															
			SD-09 Manufacturer's Field															
			Reports															
			Testing	3.13														
			FIO															
			Testing	3.13														
			FIO															
			Earthwork															
			GA															
		02316	SD-09 Manufacturer's Field															
			Reports															
			Field Density Tests															
			FIO															
			Testing of Backfill Materials															
		02567	SD-01 Preconstruction Submittals															
			Equipment															
			GA															
		02568	SD-01 Preconstruction Submittals															
			Crossing Material or Surface	2.1														
			FIO															
			SD-07 Certificates															
			Materials and Equipment															
			FIO															
			SD-08 Manufacturer's Instructions															

SUBMITTAL REGISTER

CONTRACT NO.

TITLE AND LOCATION
IDIQ - Asphalt and Concrete Repairs and Improvements

CONTRACTOR

ACTIVITY NO	TRANSMITTAL NO	SPEC SECT	DESCRIPTION ITEM SUBMITTED	PARAGRAPH #	CLASSIFICATION	GOVT OR A/E REVWR	CONTRACTOR: SCHEDULE DATES			CONTRACTOR ACTION			APPROVING AUTHORITY					
							SUBMIT	APPROVAL NEEDED BY	MATERIAL NEEDED BY	ACTION CODE	DATE OF ACTION	DATE FWD TO APPR AUTH/ DATE RCD FROM CONTR	DATE FWD TO OTHER REVIEWER	DATE RCD FROM OTH REVIEWER	ACTION CODE	DATE OF ACTION	MAILED TO CONTR/ DATE RCD FRM APPR AUTH	REMARKS
(a)	(b)	(c)	(d)	(e)	(f)		(g)	(h)	(i)	(j)	(k)	(l)	(m)	(n)	(o)	(p)	(q)	(r)
		02568	Traffic Maintenance and Detour															
			Plans															
			GA															
			Crossing Material or Surface	2.1														
			FIO															
			SD-09 Manufacturer's Field															
			Reports															
			Materials and Equipment															
			FIO															
		02579	SD-01 Preconstruction Submittals															
			Patching System															
			GA															
			SD-09 Manufacturer's Field															
			Reports															
			Patching System															
			GA															
		02630	SD-06 Test Reports															
			Placing Pipe	3.3														
			FIO															
			Determination of Density	3.7.5														
			FIO															
			Frame and Cover for Gratings	2.3.7														
			Pipe for Culverts and Storm	2.1														
			Drains															
			FIO															
		02710	SD-01 Preconstruction Submittals															

SUBMITTAL REGISTER

CONTRACT NO.

TITLE AND LOCATION
IDIQ - Asphalt and Concrete Repairs and Improvements

CONTRACTOR

ACTIVITY NO	TRANSMITTAL NO	SPEC SECT	DESCRIPTION ITEM SUBMITTED	PARAGRAPH #	CLASSIFICATION	GOVT OR A/E REVWR	CONTRACTOR: SCHEDULE DATES			CONTRACTOR ACTION			APPROVING AUTHORITY					
							SUBMIT	APPROVAL NEEDED BY	MATERIAL NEEDED BY	ACTION CODE	DATE OF ACTION	DATE FWD TO APPR AUTH/ DATE RCD FROM CONTR	DATE FWD TO OTHER REVIEWER	DATE RCD FROM OTH REVIEWER	ACTION CODE	DATE OF ACTION	MAILED TO CONTR/ DATE RCD FRM APPR AUTH	REMARKS
(a)	(b)	(c)	(d)	(e)	(f)		(g)	(h)	(i)	(j)	(k)	(l)	(m)	(n)	(o)	(p)	(q)	(r)
		02710	Plant, Equipment, Machines, and	1.6														
			Tools															
			FIO															
			Mix Design	3.1.1														
			GA															
			SD-08 Manufacturer's Instructions															
			Source of Bituminous Material	1.8														
			FIO															
			Operation of Aggregate Sources															
			SD-09 Manufacturer's Field															
			Reports															
			Sampling and Testing	3.10														
			FIO															
			Bituminous Material	3.10.8														
			FIO															
		02711	SD-01 Preconstruction Submittals															
			Mix Design	2.2														
			GA															
			SD-09 Manufacturer's Field															
			Reports															
			Stabilizing Course															
			GA															
			Bituminous Material	2.1.2														
			FIO															
			Stabilizing Course															
			FIO															

SUBMITTAL REGISTER

CONTRACT NO.

TITLE AND LOCATION
IDIQ - Asphalt and Concrete Repairs and Improvements

CONTRACTOR

ACTIVITY NO	TRANSMITTAL NO	SPEC SECT	DESCRIPTION ITEM SUBMITTED	PARAGRAPH #	CLASSIFICATION	GOVT OR A/E REVWR	CONTRACTOR: SCHEDULE DATES			CONTRACTOR ACTION			APPROVING AUTHORITY					MAILED TO CONTR/ DATE RCD FRM APPR AUTH	REMARKS
							SUBMIT	APPROVAL NEEDED BY	MATERIAL NEEDED BY	ACTION CODE	DATE OF ACTION	DATE FWD TO APPR AUTH/ DATE RCD FROM CONTR	DATE FWD TO OTHER REVIEWER	DATE RCD FROM OTH REVIEWER	ACTION CODE	DATE OF ACTION		
(a)	(b)	(c)	(d)	(e)	(f)		(g)	(h)	(i)	(j)	(k)	(l)	(m)	(n)	(o)	(p)	(q)	(r)
		02711	Source of Bituminous Materials															
			Waybills and Delivery Tickets	1.4														
		02712	SD-01 Preconstruction Submittals															
			Plant, Equipment, Machines, and	1.9														
			Tools															
			GA															
			Mix Design	2.2														
			SD-09 Manufacturer's Field															
			Reports															
			Sampling and Testing	3.4														
			GA															
			Field Density	3.5.2														
			Testing															
			FIO															
			Waybills and Delivery Tickets	1.3														
			FIO															
		02715	SD-08 Manufacturer's Instructions															
			Field Testing Control															
			GA															
			Inspection and Acceptance															
			SD-09 Manufacturer's Field															
			Reports															
			Field Testing Control															
			GA															
			Environmental Acceptability															
			FIO															

SUBMITTAL REGISTER

CONTRACT NO.

TITLE AND LOCATION
IDIQ - Asphalt and Concrete Repairs and Improvements

CONTRACTOR

ACTIVITY NO	TRANSMITTAL NO	SPEC SECT	DESCRIPTION ITEM SUBMITTED	PARAGRAPH #	CLASSIFICATION	GOVT OR A/E REVWR	CONTRACTOR: SCHEDULE DATES			CONTRACTOR ACTION			APPROVING AUTHORITY					
							SUBMIT	APPROVAL NEEDED BY	MATERIAL NEEDED BY	ACTION CODE	DATE OF ACTION	DATE FWD TO APPR AUTH/ DATE RCD FROM CONTR	DATE FWD TO OTHER REVIEWER	DATE RCD FROM OTH REVIEWER	ACTION CODE	DATE OF ACTION	MAILED TO CONTR/ DATE RCD FRM APPR AUTH	REMARKS
(a)	(b)	(c)	(d)	(e)	(f)		(g)	(h)	(i)	(j)	(k)	(l)	(m)	(n)	(o)	(p)	(q)	(r)
		02715	Testing															
			GA															
			Certification															
			FIO															
		02721	SD-01 Preconstruction Submittals															
			Equipment	1.7														
			FIO															
			SD-09 Manufacturer's Field															
			Reports															
			Sampling and Testing	1.5														
			GA															
			Waybills and Delivery Tickets	1.2.3														
			FIO															
		02722	SD-01 Preconstruction Submittals															
			Plant, Equipment, Machines, and	1.8														
			Tools															
			GA															
			SD-09 Manufacturer's Field															
			Reports															
			Sampling and Testing	1.10														
			FIO															
			Field Density															
			Waybills and Delivery Tickets	1.6														
			FIO															
			Coarse Aggregate	2.1.1.1														

SUBMITTAL REGISTER

CONTRACT NO.

TITLE AND LOCATION
IDIQ - Asphalt and Concrete Repairs and Improvements

CONTRACTOR

ACTIVITY NO	TRANSMITTAL NO	SPEC SECT	DESCRIPTION ITEM SUBMITTED	PARAGRAPH #	CLASSIFICATION	GOVT OR A/E REVWR	CONTRACTOR: SCHEDULE DATES			CONTRACTOR ACTION			APPROVING AUTHORITY					MAILED TO CONTR/ DATE RCD FRM APPR AUTH	REMARKS
							SUBMIT	APPROVAL NEEDED BY	MATERIAL NEEDED BY	ACTION CODE	DATE OF ACTION	DATE FWD TO APPR AUTH/ DATE RCD FROM CONTR	DATE FWD TO OTHER REVIEWER	DATE RCD FROM OTH REVIEWER	ACTION CODE	DATE OF ACTION		
(a)	(b)	(c)	(d)	(e)	(f)		(g)	(h)	(i)	(j)	(k)	(l)	(m)	(n)	(o)	(p)	(q)	(r)
		02740	SD-09 Manufacturer's Field															
			Reports															
			Aggregates															
			GA															
			QC Monitoring															
			Asphalt Cement Binder															
			GA															
			Asphalt Modifier															
			Crumb Rubber Modifier (CRM)															
			Testing Laboratory															
			Mix Design															
			GA															
			Contractor Quality Control															
			Material Acceptance															
		02741	SD-09 Manufacturer's Field															
			Reports															
			Aggregates	2.1														
			GA															
			QC Monitoring	3.10.3.10														
			Asphalt Cement Binder	2.2														
			GA															
			Testing Laboratory	3.6														
			Asphalt Cement Binder	2.2														
			FIO															
			Aggregates	2.1														
			Mix Design	2.3														

SUBMITTAL REGISTER

CONTRACT NO.

TITLE AND LOCATION
IDIQ - Asphalt and Concrete Repairs and Improvements

CONTRACTOR

ACTIVITY NO	TRANSMITTAL NO	SPEC SECT	DESCRIPTION ITEM SUBMITTED	PARAGRAPH #	CLASSIFICATION	GOVT OR A/E REVWR	CONTRACTOR: SCHEDULE DATES			CONTRACTOR ACTION			APPROVING AUTHORITY					
							SUBMIT	APPROVAL NEEDED BY	MATERIAL NEEDED BY	ACTION CODE	DATE OF ACTION	DATE FWD TO APPR AUTH/ DATE RCD FROM CONTR	DATE FWD TO OTHER REVIEWER	DATE RCD FROM OTH REVIEWER	ACTION CODE	DATE OF ACTION	MAILED TO CONTR/ DATE RCD FRM APPR AUTH	REMARKS
(a)	(b)	(c)	(d)	(e)	(f)		(g)	(h)	(i)	(j)	(k)	(l)	(m)	(n)	(o)	(p)	(q)	(r)
		02741	GA															
			Contractor Quality Control	3.10														
			Material Acceptance															
		02745	SD-09 Manufacturer's Field															
			Reports															
			Tests															
			FIO															
			Waybills and Delivery Tickets	1.7														
			FIO															
		02746	SD-09 Manufacturer's Field															
			Reports															
			Coarse and Fine Aggregate															
			GA															
			Open Graded Mix Aggregate															
			Gradation															
			Bituminous Material															
			Slurry Grout Sand															
			Fly Ash															
			Slurry Grout Formula															
			Cement															
			GA															
			Cross Polymer Resin															
			Curing Compound															
			Open Graded Mix															
			GA															
			Slurry Grout Job-Mix-Formula															

SUBMITTAL REGISTER

CONTRACT NO.

TITLE AND LOCATION
IDIQ - Asphalt and Concrete Repairs and Improvements

CONTRACTOR

ACTIVITY NO	TRANSMITTAL NO	SPEC SECT	DESCRIPTION ITEM SUBMITTED	PARAGRAPH #	CLASSIFICATION	GOVT OR A/E REVWR	CONTRACTOR: SCHEDULE DATES			CONTRACTOR ACTION			APPROVING AUTHORITY					
							SUBMIT	APPROVAL NEEDED BY	MATERIAL NEEDED BY	ACTION CODE	DATE OF ACTION	DATE FWD TO APPR AUTH/ DATE RCD FROM CONTR	DATE FWD TO OTHER REVIEWER	DATE RCD FROM OTH REVIEWER	ACTION CODE	DATE OF ACTION	MAILED TO CONTR/ DATE RCD FRM APPR AUTH	REMARKS
(a)	(b)	(c)	(d)	(e)	(f)		(g)	(h)	(i)	(j)	(k)	(l)	(m)	(n)	(o)	(p)	(q)	(r)
		02748	SD-09 Manufacturer's Field															
			Reports															
			Tests															
			GA															
			Waybills and Delivery Tickets	1.2.3														
			FIO															
			Mix Design Samples (Contractor															
			and Job)															
			GA															
			Samples for Government Testing															
		02754	SD-01 Preconstruction Submittals															
			Equipment	1.7														
			GA															
			SD-07 Certificates															
			Paving	3.4														
			GA															
			SD-08 Manufacturer's Instructions															
			Mixture Proportions	2.11														
			GA															
			Placement Inspections															
			FIO															
			Smoothness & CQC Reports															
		02760	SD-06 Test Reports															
			Manufacturer's Recommendations															
			GA															
			SD-07 Certificates															

SUBMITTAL REGISTER

CONTRACT NO.

TITLE AND LOCATION
IDIQ - Asphalt and Concrete Repairs and Improvements

CONTRACTOR

ACTIVITY NO	TRANSMITTAL NO	SPEC SECT	DESCRIPTION ITEM SUBMITTED	PARAGRAPH #	CLASSIFICATION	GOVT OR A/E REVWR	CONTRACTOR: SCHEDULE DATES			CONTRACTOR ACTION			APPROVING AUTHORITY					
							SUBMIT	APPROVAL NEEDED BY	MATERIAL NEEDED BY	ACTION CODE	DATE OF ACTION	DATE FWD TO APPR AUTH/ DATE RCD FROM CONTR	DATE FWD TO OTHER REVIEWER	DATE RCD FROM OTH REVIEWER	ACTION CODE	DATE OF ACTION	MAILED TO CONTR/ DATE RCD FRM APPR AUTH	REMARKS
(a)	(b)	(c)	(d)	(e)	(f)		(g)	(h)	(i)	(j)	(k)	(l)	(m)	(n)	(o)	(p)	(q)	(r)
		02760	Construction Equipment List															
			FIO															
			Materials															
			GA															
		02762	SD-01 Preconstruction Submittals															
			Test Results															
			GA															
			Equipment List															
			Manufacturer's Instructions															
			Compression Seals	2.1														
			GA															
		02770	SD-04 Samples															
			Sidewalks, Handicap Ramps,															
			Curbs and Gutters, Valley Gutters															
			FIO															
			SD-09 Manufacturer’s Field															
			Reports															
			Field Quality Control	3.8														
			FIO															
			Concrete															
			GA															
		02786	SD-01 Preconstruction Submittals															
			Mixing and Application Machine	1.8.1														
			FIO															
			Job Mix Formula (JMF)	2.6.1														
			GA															

SUBMITTAL REGISTER

CONTRACT NO.

TITLE AND LOCATION
IDIQ - Asphalt and Concrete Repairs and Improvements

CONTRACTOR

ACTIVITY NO	TRANSMITTAL NO	SPEC SECT	DESCRIPTION ITEM SUBMITTED	PARAGRAPH #	CLASSIFICATION	GOVT OR A/E REVWR	CONTRACTOR: SCHEDULE DATES			CONTRACTOR ACTION			APPROVING AUTHORITY					
							SUBMIT	APPROVAL NEEDED BY	MATERIAL NEEDED BY	ACTION CODE	DATE OF ACTION	DATE FWD TO APPR AUTH/ DATE RCD FROM CONTR	DATE FWD TO OTHER REVIEWER	DATE RCD FROM OTH REVIEWER	ACTION CODE	DATE OF ACTION	MAILED TO CONTR/ DATE RCD FRM APPR AUTH	REMARKS
(a)	(b)	(c)	(d)	(e)	(f)		(g)	(h)	(i)	(j)	(k)	(l)	(m)	(n)	(o)	(p)	(q)	(r)
		02786	Sampling and Testing	3.5														
			FIO															
			SD-09 Manufacturer's Field															
			Reports															
			Sampling and Testing	3.5														
			FIO															
			Materials															
			FIO															
		02787	SD-04 Samples															
			Bituminous Binder	3.3.2														
		02811	SD-01 Preconstruction Submittals															
			Design Analysis and Calculations															
			GA															
			Spare Parts															
			SD-04 Samples															
			Sprinkler System															
			GA															
			SD-09 Manufacturer's Field															
			Reports															
			Field Tests															
			GA															
			Operations & Maintenance															
			Manuals															
			Sprinkler System															
			GA															
		02840	SD-01 Preconstruction Submittals															

SUBMITTAL REGISTER

CONTRACT NO.

TITLE AND LOCATION
IDIQ - Asphalt and Concrete Repairs and Improvements

CONTRACTOR

ACTIVITY NO	TRANSMITTAL NO	SPEC SECT	DESCRIPTION ITEM SUBMITTED	PARAGRAPH #	CLASSIFICATION	GOVT OR A/E REVWR	CONTRACTOR: SCHEDULE DATES			CONTRACTOR ACTION			APPROVING AUTHORITY					
							SUBMIT	APPROVAL NEEDED BY	MATERIAL NEEDED BY	ACTION CODE	DATE OF ACTION	DATE FWD TO APPR AUTH/ DATE RCD FROM CONTR	DATE FWD TO OTHER REVIEWER	DATE RCD FROM OTH REVIEWER	ACTION CODE	DATE OF ACTION	MAILED TO CONTR/ DATE RCD FRM APPR AUTH	REMARKS
(a)	(b)	(c)	(d)	(e)	(f)		(g)	(h)	(i)	(j)	(k)	(l)	(m)	(n)	(o)	(p)	(q)	(r)
		02840	Vehicle Barriers															
			SD-04 Samples															
			Vehicle Barriers															
			GA															
			SD-08 Manufacturer’s Instructions															
			Vehicle Barriers															
			SD-09 Manufacturer’s Field															
			Reports															
			Field Testing	3.4														
			Vehicle Barriers															
			GA															
		02921	SD-01 Preconstruction Submittals															
			Equipment															
			[_FIO____]															
			Surface Erosion Control Material	2.8														
			Chemical Treatment Material															
			SD-07 Certificates															
			Equipment															
			[_FIO____]															
			SD-08 Manufacturer’s Instructions															
			Delivery	1.4.1														
			[FIO_____]															
			Finished Grade and Topsoil	3.2.1														
			[_FIO____]															
			Topsoil	2.2														

SUBMITTAL REGISTER

CONTRACT NO.

TITLE AND LOCATION
IDIQ - Asphalt and Concrete Repairs and Improvements

CONTRACTOR

ACTIVITY NO	TRANSMITTAL NO	SPEC SECT	DESCRIPTION ITEM SUBMITTED	PARAGRAPH #	CLASSIFICATION	GOVT OR A/E REVWR	CONTRACTOR: SCHEDULE DATES			CONTRACTOR ACTION			APPROVING AUTHORITY					MAILED TO CONTR/ DATE RCD FRM APPR AUTH	REMARKS
							SUBMIT	APPROVAL NEEDED BY	MATERIAL NEEDED BY	ACTION CODE	DATE OF ACTION	DATE FWD TO APPR AUTH/ DATE RCD FROM CONTR	DATE FWD TO OTHER REVIEWER	DATE RCD FROM OTH REVIEWER	ACTION CODE	DATE OF ACTION		
(a)	(b)	(c)	(d)	(e)	(f)		(g)	(h)	(i)	(j)	(k)	(l)	(m)	(n)	(o)	(p)	(q)	(r)
		02921	SD-09 Manufacturer's Field															
			Reports															
			Equipment Calibration	3.1.3														
			[FIO_____]															
			Soil Test	3.1.4														
			[_FIO____]															
			Seed	2.1														
			[_FIO_]															
			Topsoil	2.2														
			pH Adjuster	2.3.1														
			Fertilizer	2.3.2														
			Organic Material	2.3.4														
			Soil Conditioner	2.3.5														
			Mulch	2.4														
			Asphalt Adhesive	2.5														
			Pesticide	2.7														
			Delivered Topsoil	1.4.1.1														
			[_FIO_]															
			Soil Amendments	2.3														
			Mulch	2.4														
			Quantity Check	3.5														
			[_FIO_]															
			Seed Establishment Period	3.9														
			Maintenance Record	3.9.3.5														
			Application of Pesticide	3.6														
		02935	SD-01 Preconstruction Submittals															

SUBMITTAL REGISTER

CONTRACT NO.

TITLE AND LOCATION
IDIQ - Asphalt and Concrete Repairs and Improvements

CONTRACTOR

ACTIVITY NO	TRANSMITTAL NO	SPEC SECT	DESCRIPTION ITEM SUBMITTED	PARAGRAPH #	CLASSIFICATION	GOVT OR A/E REVWR	CONTRACTOR: SCHEDULE DATES			CONTRACTOR ACTION			APPROVING AUTHORITY					
							SUBMIT	APPROVAL NEEDED BY	MATERIAL NEEDED BY	ACTION CODE	DATE OF ACTION	DATE FWD TO APPR AUTH/ DATE RCD FROM CONTR	DATE FWD TO OTHER REVIEWER	DATE RCD FROM OTH REVIEWER	ACTION CODE	DATE OF ACTION	MAILED TO CONTR/ DATE RCD FRM APPR AUTH	REMARKS
(a)	(b)	(c)	(d)	(e)	(f)		(g)	(h)	(i)	(j)	(k)	(l)	(m)	(n)	(o)	(p)	(q)	(r)
		02935	Manufacturer's Literature															
			FIO															
			SD-07 Certificates															
			Equipment List															
			FIO															
			SD-08 Manufacturer’s Instructions															
			Delivery															
			FIO															
			Application of Pesticide	3.7														
			Maintenance Report	3.10.3.7														
			Turf Establishment Period	3.10														
		02950	SD-07 Certificates															
			Delivery Schedule															
			FIO															
			SD-09 Manufacturer’s Field															
			Reports															
			Soil Test															
			FIO															
			Percolation Test															
			Soil Amendments;															
			FIO															
			Plants;															
			Maintenance Period;															
			FIO															
			Maintenance Report;															
			Maintenance Instructions;															

SUBMITTAL REGISTER

CONTRACT NO.

TITLE AND LOCATION
IDIQ - Asphalt and Concrete Repairs and Improvements

CONTRACTOR

ACTIVITY NO	TRANSMITTAL NO	SPEC SECT	DESCRIPTION ITEM SUBMITTED	PARAGRAPH #	CLASSIFICATION	GOVT OR A/E REVWR	CONTRACTOR: SCHEDULE DATES			CONTRACTOR ACTION			APPROVING AUTHORITY					MAILED TO CONTR/ DATE RCD FRM APPR AUTH	REMARKS
							SUBMIT	APPROVAL NEEDED BY	MATERIAL NEEDED BY	ACTION CODE	DATE OF ACTION	DATE FWD TO APPR AUTH/ DATE RCD FROM CONTR	DATE FWD TO OTHER REVIEWER	DATE RCD FROM OTH REVIEWER	ACTION CODE	DATE OF ACTION		
(a)	(b)	(c)	(d)	(e)	(f)		(g)	(h)	(i)	(j)	(k)	(l)	(m)	(n)	(o)	(p)	(q)	(r)
		02951	SD-01 Preconstruction Submittals															
			Rubber Removal Equipment															
			FIO															
			SD-08 Manufacturer's Instructions															
			Runway Rubber Removal															
			FIO															
			Waste Identification and Disposal															
			Plant															
			Lead-based paint removal															
		02960	SD-01 Preconstruction Submittals															
			Mix Design															
			GA															
			Stabilizing Course															
			FIO															
			Plant, Equipment, Machines, and															
			Tools															
			FIO															
			SD-09 Manufacturer's Field															
			Reports															
			Sampling and Testing	1.10														
			FIO															
			Field Density															
			Waybills and Delivery Tickets															
		02961	SD-01 Preconstruction Submittals															
			Mix Design	3.1														
			GA															

SUBMITTAL REGISTER

CONTRACT NO.

TITLE AND LOCATION
IDIQ - Asphalt and Concrete Repairs and Improvements

CONTRACTOR

ACTIVITY NO	TRANSMITTAL NO	SPEC SECT	DESCRIPTION ITEM SUBMITTED	PARAGRAPH #	CLASSIFICATION	GOVT OR A/E REVWR	CONTRACTOR: SCHEDULE DATES			CONTRACTOR ACTION			APPROVING AUTHORITY					
							SUBMIT	APPROVAL NEEDED BY	MATERIAL NEEDED BY	ACTION CODE	DATE OF ACTION	DATE FWD TO APPR AUTH/ DATE RCD FROM CONTR	DATE FWD TO OTHER REVIEWER	DATE RCD FROM OTH REVIEWER	ACTION CODE	DATE OF ACTION	MAILED TO CONTR/ DATE RCD FRM APPR AUTH	REMARKS
(a)	(b)	(c)	(d)	(e)	(f)		(g)	(h)	(i)	(j)	(k)	(l)	(m)	(n)	(o)	(p)	(q)	(r)
		02961	Plant, Equipment, Machines, and	1.7														
			Tools															
			FIO															
			SD-08 Manufacturer's Instructions															
			Bituminous Material	2.1.2														
			FIO															
			SD-09 Manufacturer's Field															
			Reports															
			Field Quality Control	3.10														
			FIO															
			Pulverized Asphalt/Base Material	2.1.4														
			Fly Ash	2.1.3														
		02962	SD-01 Preconstruction Submittals															
			Job Mix Formula	3.1														
			GA															
			Plant, Equipment, Machines, and	1.7														
			Tools															
			FIO															
			SD-08 Manufacturer's Instructions															
			Emulsified Asphalt Stabilizing	2.1.1														
			Additive															
			FIO															
			SD-09 Manufacturer's Field															
			Reports															
			Sampling and Testing	3.9														
			FIO															

SUBMITTAL REGISTER

CONTRACT NO.

TITLE AND LOCATION
IDIQ - Asphalt and Concrete Repairs and Improvements

CONTRACTOR

ACTIVITY NO	TRANSMITTAL NO	SPEC SECT	DESCRIPTION ITEM SUBMITTED	PARAGRAPH #	CLASSIFICATION	GOVT OR A/E REVWR	CONTRACTOR: SCHEDULE DATES			CONTRACTOR ACTION			APPROVING AUTHORITY					MAILED TO CONTR/ DATE RCD FRM APPR AUTH	REMARKS
							SUBMIT	APPROVAL NEEDED BY	MATERIAL NEEDED BY	ACTION CODE	DATE OF ACTION	DATE FWD TO APPR AUTH/ DATE RCD FROM CONTR	DATE FWD TO OTHER REVIEWER	DATE RCD FROM OTH REVIEWER	ACTION CODE	DATE OF ACTION		
(a)	(b)	(c)	(d)	(e)	(f)		(g)	(h)	(i)	(j)	(k)	(l)	(m)	(n)	(o)	(p)	(q)	(r)
		02962	Pulverized Asphalt/Base Material	2.1.2														
		02975	SD-06 Test Reports															
			Installation of Sealant	3.3														
			FIO															
			SD-09 Manufacturer's Field															
			Reports															
			Test Requirements															
			GA															
			Materials															
			GA															
		02981	SD-01 Preconstruction Submittals															
			Equipment															
			GA															
		03100	SD-01 Preconstruction Submittals															
			Design	1.3														
			GA															
			Form Materials	2.1														
			SD-04 Samples															
			Concrete Formwork															
			GA															
			SD-06 Test Reports															
			Form Releasing Agents	2.1.7														
			FIO															
			Fiber Voids	2.1.8														
			FIO															
			Fiber Voids	2.1.8														

SUBMITTAL REGISTER

CONTRACT NO.

TITLE AND LOCATION
IDIQ - Asphalt and Concrete Repairs and Improvements

CONTRACTOR

ACTIVITY NO	TRANSMITTAL NO	SPEC SECT	DESCRIPTION ITEM SUBMITTED	PARAGRAPH #	CLASSIFICATION	GOVT OR A/E REVWR	CONTRACTOR: SCHEDULE DATES			CONTRACTOR ACTION			APPROVING AUTHORITY					
							SUBMIT	APPROVAL NEEDED BY	MATERIAL NEEDED BY	ACTION CODE	DATE OF ACTION	DATE FWD TO APPR AUTH/ DATE RCD FROM CONTR	DATE FWD TO OTHER REVIEWER	DATE RCD FROM OTH REVIEWER	ACTION CODE	DATE OF ACTION	MAILED TO CONTR/ DATE RCD FRM APPR AUTH	REMARKS
(a)	(b)	(c)	(d)	(e)	(f)		(g)	(h)	(i)	(j)	(k)	(l)	(m)	(n)	(o)	(p)	(q)	(r)
		03100	FIO															
		03200	SD-04 Samples															
			Concrete Reinforcement System															
			GA															
			SD-08 Manufacturer's Instructions															
			Welding	1.3														
			FIO															
			Reinforcing Steel	2.3														
			FIO															
		03250	SD-01 Preconstruction Submittals															
			Materials															
			FIO															
			Materials															
			FIO															
		03300	SD-08 Manufacturer's Instructions															
			Mixture Proportions	1.9														
			GA															
			Lightweight Aggregate Concrete	3.4														
			SD-09 Manufacturer's Field															
			Reports															
			Testing and Inspection for	3.17														
			Contractor Quality Control															
			GA															
			Qualifications	1.5														
			GA															
		03371	SD-01 Preconstruction Submittals															

SUBMITTAL REGISTER

CONTRACT NO.

TITLE AND LOCATION
IDIQ - Asphalt and Concrete Repairs and Improvements

CONTRACTOR

ACTIVITY NO	TRANSMITTAL NO	SPEC SECT	DESCRIPTION ITEM SUBMITTED	PARAGRAPH #	CLASSIFICATION	GOVT OR A/E REVWR	CONTRACTOR: SCHEDULE DATES			CONTRACTOR ACTION			APPROVING AUTHORITY					
							SUBMIT	APPROVAL NEEDED BY	MATERIAL NEEDED BY	ACTION CODE	DATE OF ACTION	DATE FWD TO APPR AUTH/ DATE RCD FROM CONTR	DATE FWD TO OTHER REVIEWER	DATE RCD FROM OTH REVIEWER	ACTION CODE	DATE OF ACTION	MAILED TO CONTR/ DATE RCD FRM APPR AUTH	REMARKS
(a)	(b)	(c)	(d)	(e)	(f)		(g)	(h)	(i)	(j)	(k)	(l)	(m)	(n)	(o)	(p)	(q)	(r)
		03371	Mixture Proportions	1.4														
			GA															
			SD-09 Manufacturer's Field															
			Reports															
			Aggregates	2.1.2														
			FIO															
			Accelerator Compatibility	2.1.4.1														
			GA															
			Preconstruction Test Panels	1.8														
			Portland Cement	2.1.1.1														
			FIO															
			Pozzolans															
			Silica Fume															
			Accelerating Admixtures	2.1.4.1														
			Curing Materials	2.1.5														
			Steel Fiber Reinforcement															
			Qualifications	1.7														
			GA															
		16070	SD-01 Preconstruction Submittals															
			Contractor Designed Bracing															
			GA															
		16370	SD-04 Samples															
			Electrical Distribution System															
			FIO															
			FIO															
			FIO	1.3														

SUBMITTAL REGISTER

CONTRACT NO.

TITLE AND LOCATION
IDIQ - Asphalt and Concrete Repairs and Improvements

CONTRACTOR

ACTIVITY NO	TRANSMITTAL NO	SPEC SECT	DESCRIPTION ITEM SUBMITTED	PARAGRAPH #	CLASSIFICATION	GOVT OR A/E REVWR	CONTRACTOR: SCHEDULE DATES			CONTRACTOR ACTION			APPROVING AUTHORITY					MAILED TO CONTR/ DATE RCD FRM APPR AUTH	REMARKS
							SUBMIT	APPROVAL NEEDED BY	MATERIAL NEEDED BY	ACTION CODE	DATE OF ACTION	DATE FWD TO APPR AUTH/ DATE RCD FROM CONTR	DATE FWD TO OTHER REVIEWER	DATE RCD FROM OTH REVIEWER	ACTION CODE	DATE OF ACTION		
(a)	(b)	(c)	(d)	(e)	(f)		(g)	(h)	(i)	(j)	(k)	(l)	(m)	(n)	(o)	(p)	(q)	(r)
		16370	FIO	1.3														
			FIO	1.3														
			FIO	1.3														
			As-Built Drawings															
			SD-09 Manufacturer's Field															
			Reports															
			Factory Test															
			FIO															
			FIO															
			FIO	1.3														
			FIO	1.3														
			FIO	1.3														
			FIO	1.3														
			Field Testing	3.11														
			Test Reports															
			GA															
			Materials and Equipment															
			FIO															
			FIO	1.3														
			FIO	1.3														
			Electrical Distribution System															
			FIO															
			FIO	1.3														
			FIO	1.3														
		16375	SD-01 Preconstruction Submittals															

SUBMITTAL REGISTER

CONTRACT NO.

TITLE AND LOCATION
IDIQ - Asphalt and Concrete Repairs and Improvements

CONTRACTOR

ACTIVITY NO	TRANSMITTAL NO	SPEC SECT	DESCRIPTION ITEM SUBMITTED	PARAGRAPH #	CLASSIFICATION	GOVT OR A/E REVWR	CONTRACTOR: SCHEDULE DATES			CONTRACTOR ACTION			APPROVING AUTHORITY					MAILED TO CONTR/ DATE RCD FRM APPR AUTH	REMARKS
							SUBMIT	APPROVAL NEEDED BY	MATERIAL NEEDED BY	ACTION CODE	DATE OF ACTION	DATE FWD TO APPR AUTH/ DATE RCD FROM CONTR	DATE FWD TO OTHER REVIEWER	DATE RCD FROM OTH REVIEWER	ACTION CODE	DATE OF ACTION		
(a)	(b)	(c)	(d)	(e)	(f)		(g)	(h)	(i)	(j)	(k)	(l)	(m)	(n)	(o)	(p)	(q)	(r)
		16375	Fault Current and Protective															
			Devices Coordination Studies															
			GA															
			Manufacturer's Catalog Data															
			FIO															
			Material, Equipment, and Fixture															
			Lists															
			Installation Procedures															
			SD-04 Samples															
			Electrical Distribution System															
			FIO															
			As-Built Drawings															
			SD-09 Manufacturer’s Field															
			Reports															
			Factory Test															
			FIO															
			Field Testing															
			Test Reports															
			Cable Installation Reports															
			Materials and Equipment															
			FIO															
			Cable Splicer Qualification															
			Cable Installer Qualifications															
			Electrical Distribution System															
			FIO															
		16528	SD-01 Preconstruction Submittals															

SUBMITTAL REGISTER

CONTRACT NO.

TITLE AND LOCATION
IDIQ - Asphalt and Concrete Repairs and Improvements

CONTRACTOR

ACTIVITY NO	TRANSMITTAL NO	SPEC SECT	DESCRIPTION ITEM SUBMITTED	PARAGRAPH #	CLASSIFICATION	GOVT OR A/E REVWR	CONTRACTOR: SCHEDULE DATES			CONTRACTOR ACTION			APPROVING AUTHORITY					MAILED TO CONTR/ DATE RCD FRM APPR AUTH	REMARKS
							SUBMIT	APPROVAL NEEDED BY	MATERIAL NEEDED BY	ACTION CODE	DATE OF ACTION	DATE FWD TO APPR AUTH/ DATE RCD FROM CONTR	DATE FWD TO OTHER REVIEWER	DATE RCD FROM OTH REVIEWER	ACTION CODE	DATE OF ACTION		
(a)	(b)	(c)	(d)	(e)	(f)		(g)	(h)	(i)	(j)	(k)	(l)	(m)	(n)	(o)	(p)	(q)	(r)
		16528	Equipment and Materials															
			FIO															
			Spare Parts															
			SD-04 Samples															
			Lighting System															
			GA															
			As-Built Drawings															
			FIO															
			Operating Test															
			Ground Resistance															
			Measurements															
			Lighting System															
			FIO															

SECTION TABLE OF CONTENTS

DIVISION 01 - GENERAL REQUIREMENTS

SECTION 01355

ENVIRONMENTAL PROTECTION

PART 1 GENERAL

1.1 REFERENCES
1.2 DEFINITIONS
1.2.1 Environmental Pollution and Damage
1.2.2 Environmental Protection
1.2.3 Contractor Generated Hazardous Waste
1.2.4 Land Application for Discharge Water
1.2.5 Pesticide
1.2.6 Pests
1.2.7 Surface Discharge
1.2.8 Waters of the United States
1.2.9 Wetlands
1.3 GENERAL REQUIREMENTS
1.4 SUBCONTRACTORS
1.5 PAYMENT
1.6 SUBMITTALS
1.7 ENVIRONMENTAL PROTECTION PLAN
1.7.1 Compliance
1.7.2 Contents
1.7.3 Appendix
1.8 PROTECTION FEATURES
1.9 SPECIAL ENVIRONMENTAL REQUIREMENTS
1.10 ENVIRONMENTAL ASSESSMENT OF CONTRACT DEVIATIONS
1.11 NOTIFICATION

PART 2 PRODUCTS (NOT USED)

PART 3 EXECUTION

3.1 ENVIRONMENTAL PERMITS AND COMMITMENTS
3.2 LAND RESOURCES
3.2.1 Work Area Limits
3.2.2 Landscape
3.2.3 Erosion and Sediment Controls
3.2.4 Contractor Facilities and Work Areas
3.3 WATER RESOURCES
3.4 AIR RESOURCES
3.4.1 Particulates
3.4.2 Odors
3.4.3 Sound Intrusions
3.4.4 Burning
3.5 CHEMICAL MATERIALS MANAGEMENT AND WASTE DISPOSAL
3.5.1 Solid Wastes
3.5.2 Chemicals and Chemical Wastes

3.5.3 Contractor Generated Hazardous Wastes/Excess Hazardous Materials
3.5.4 Fuel and Lubricants
3.5.5 Waste Water
3.6 RECYCLING AND WASTE MINIMIZATION
3.7 NON-HAZARDOUS SOLID WASTE DIVERSION REPORT
3.8 HISTORICAL, ARCHAEOLOGICAL, AND CULTURAL RESOURCES
3.9 BIOLOGICAL RESOURCES
3.9.1 Fish and Wildlife
3.9.2 Protection of Endangered Trees:
3.10 INTEGRATED PEST MANAGEMENT
3.10.1 Pesticide Delivery and Storage
3.10.2 Qualifications
3.10.3 Pesticide Handling Requirements
3.10.4 Application
3.11 PREVIOUSLY USED EQUIPMENT
3.12 MAINTENANCE OF POLLUTION FACILITIES
3.13 TRAINING OF CONTRACTOR PERSONNEL
3.14 POST CONSTRUCTION CLEANUP

-- End of Section Table of Contents --

SECTION 01355

ENVIRONMENTAL PROTECTION

PART 1 GENERAL

1.1 REFERENCES

The publications listed below form a part of this specification to the extent referenced. The publications are referred to in the text by basic designation only.

AIR FORCE INSTRUCTION

AFI 32-1053	Pest Management Program

ARMY REGULATION

AR 200-5	Pest Management

CODE OF FEDERAL REGULATIONS (CFR)

33 CFR 328	Definitions
40 CFR 68	Chemical Accident Prevention Provisions
40 CFR 152 - 186	Pesticide Programs
40 CFR 260	Hazardous Waste Management System: General
40 CFR 261	Identification and Listing of Hazardous Waste
40 CFR 262	Standards Applicable to Generators of Hazardous Waste
40 CFR 279	Standards for the Management of Used Oil
40 CFR 302	Designation, Reportable Quantities, and Notification
40 CFR 355	Emergency Planning and Notification
49 CFR 171 - 178	Hazardous Materials Regulations

ENGINEERING MANUALS (EM)

EM 385-1-1	(1996) U.S. Army Corps on Engineers Safety and Health Requirements Manual

US ARMY CORPS OF ENGINEERS TECHNICAL REPORT

1.2 DEFINITIONS

1.2.1 Environmental Pollution and Damage

Environmental pollution and damage is the presence of chemical, physical, or biological elements or agents which adversely affect human health or welfare; unfavorably alter ecological balances of importance to human life; affect other species of importance to humankind; or degrade the environment aesthetically, culturally and/or historically.

1.2.2 Environmental Protection

Environmental protection is the prevention/control of pollution and habitat disruption that may occur to the environment during construction. The control of environmental pollution and damage requires consideration of land, water, and air; biological and cultural resources; and includes management of visual aesthetics; noise; solid, chemical, gaseous, and liquid waste; radiant energy and radioactive material as well as other pollutants.

1.2.3 Contractor Generated Hazardous Waste

Contractor generated hazardous waste means materials that, if abandoned or disposed of, may meet the definition of a hazardous waste. These waste streams would typically consist of material brought on site by the Contractor to execute work, but are not fully consumed during the course of construction. Examples include, but are not limited to, excess paint thinners (i.e. methyl ethyl ketone, toluene etc.), waste thinners,excess paints, excess solvents, waste solvents, and excess pesticides, and contaminated pesticide equipment rinse water.

1.2.4 Land Application for Discharge Water

The term "Land Application" for discharge water implies that the Contractor shall discharge water at a rate which allows the water to percolate into the soil. No sheeting action, soil erosion, discharge into storm sewers, discharge into defined drainage areas, or discharge into the "waters of the United States" shall occur. Land Application shall be in compliance with all applicable Federal, State, and local laws and regulations.

1.2.5 Pesticide

Pesticide is defined as any substance or mixture of substances intended for preventing, destroying, repelling, or mitigating any pest, or intended for use as a plant regulator, defoliant or desiccant.

1.2.6 Pests

The term "pests" means arthropods, birds, rodents, nematodes, fungi, bacteria, viruses, algae, snails, marine borers, snakes, weeds and other

organisms (except for human or animal disease-causing organisms) that adversely affect readiness, military operations, or the well-being of personnel and animals; attack or damage real property, supplies, equipment, or vegetation; or are otherwise undesirable.

1.2.7 Surface Discharge

The term "Surface Discharge" implies that the water is discharged with possible sheeting action and subsequent soil erosion may occur. Waters that are surface discharged may terminate in drainage ditches, storm sewers,creeks, and/or "waters of the United States" and would require a permit to discharge water from the governing agency.

1.2.8 Waters of the United States

All waters which are under the jurisdiction of the Clean Water Act, as defined in 33 CFR 328.

1.2.9 Wetlands

Wetlands means those areas that are inundated or saturated by surface or ground water at a frequency and duration sufficient to support, and that under normal circumstances do support, a prevalence of vegetation typically adapted for life in saturated soil conditions. Wetlands generally include swamps, marshes, and bogs. Official determination of whether or not an area is classified as a wetland must be done in accordance with WETLAND MANUAL.

1.3 GENERAL REQUIREMENTS

The Contractor shall minimize environmental pollution and damage that may occur as the result of construction operations. The environmental resources within the project boundaries and those affected outside the limits of permanent work shall be protected during the entire duration of this contract. The Contractor shall comply with all applicable environmental Federal, State, and local laws and regulations. The Contractor shall be responsible for any delays resulting from failure to comply with environmental laws and regulations.

1.4 SUBCONTRACTORS

The Contractor shall ensure compliance with this section by subcontractors.

1.5 PAYMENT

No separate payment will be made for work covered under this section. The Contractor shall be responsible for payment of fees associated with environmental permits, application, and/or notices obtained by the Contractor. All costs associated with this section shall be included in the contract price. The Contractor shall be responsible for payment of all fines/fees for violation or non-compliance with Federal, State, Regional and local laws and regulations.

1.6 SUBMITTALS

Government review is required for submittals. The following shall be submitted in accordance with Section 01330 SUBMITTAL PROCEDURES:

SD-01 Preconstruction Submittals

Environmental Protection Plan; GA, RE

The environmental protection plan.

1.7 ENVIRONMENTAL PROTECTION PLAN

Prior to commencing construction activities or delivery of materials to the site, the Contractor shall submit an Environmental Protection Plan for review by the Contracting Officer. The purpose of the Environmental Protection Plan is to present a comprehensive overview of known or potential environmental issues which the Contractor must address during construction. Issues of concern shall be defined within the Environmental Protection Plan as outlined in this section. The Contractor shall address each topic at a level of detail commensurate with the environmental issue and required construction task(s). Topics or issues which are not identified in this section, but which the Contractor considers necessary, shall be identified and discussed after those items formally identified in this section. Prior to submittal of the Environmental Protection Plan, the Contractor shall meet with the Contracting Officer for the purpose of discussing the implementation of the initial Environmental Protection Plan; possible subsequent additions and revisions to the plan including any reporting requirements; and methods for administration of the Contractor's Environmental Plans. The Environmental Protection Plan shall be current and maintained onsite by the Contractor.

1.7.1 Compliance

No requirement in this Section shall be construed as relieving the Contractor of any applicable Federal, State, and local environmental protection laws and regulations. During Construction, the Contractor shall be responsible for identifying, implementing, and submitting for approval any additional requirements to be included in the Environmental Protection Plan.

1.7.2 Contents

The environmental protection plan shall include, but shall not be limited to, the following:

a. Name(s) of person(s) within the Contractor's organization who is(are) responsible for ensuring adherence to the Environmental Protection Plan.

b. Name(s) and qualifications of person(s) responsible for manifesting hazardous waste to be removed from the site, if applicable.

c. Name(s) and qualifications of person(s) responsible for training the Contractor's environmental protection personnel.

d. Description of the Contractor's environmental protection personnel training program.

e. An erosion and sediment control plan which identifies the type and location of the erosion and sediment controls to be provided. The plan shall include monitoring and reporting requirements to assure that the control measures are in compliance with the erosion and sediment control plan, Federal, State, and local laws and regulations. A Storm Water Pollution Prevention Plan (SWPPP) may be substituted for this

plan.

f. Drawings showing locations of proposed temporary excavations or embankments for haul roads, stream crossings, material storage areas, structures, sanitary facilities, and stockpiles of excess or spoil materials including methods to control runoff and to contain materials on the site.

g. Traffic control plans including measures to reduce erosion of temporary roadbeds by construction traffic, especially during wet weather. Plan shall include measures to minimize the amount of mud transported onto paved public roads by vehicles or runoff.

h. Work area plan showing the proposed activity in each portion of the area and identifying the areas of limited use or nonuse. Plan should include measures for marking the limits of use areas including methods for protection of features to be preserved within authorized work areas.

i. Drawing showing the location of borrow areas.

j. The Spill Control plan shall include the procedures, instructions, and reports to be used in the event of an unforeseen spill of a substance regulated by 40 CFR 68, 40 CFR 302, 40 CFR 355, and/or regulated under State or Local laws and regulations. The Spill Control Plan supplements the requirements of EM 385-1-1. This plan shall include as a minimum:

1. The name of the individual who will report any spills or hazardous substance releases and who will follow up with complete documentation. This individual shall immediately notify the Contracting Officer in addition to the legally required Federal, State, and local reporting channels (including the National Response Center 1-800-424-8802) if a reportable quantity is released to the environment. The plan shall contain a list of the required reporting channels and telephone numbers.

2. The name and qualifications of the individual who will be responsible for implementing and supervising the containment and cleanup.

3. Training requirements for Contractor's personnel and methods of accomplishing the training.

4. A list of materials and equipment to be immediately available at the job site, tailored to cleanup work of the potential hazard(s) identified.

5. The names and locations of suppliers of containment materials and locations of additional fuel oil recovery, cleanup, restoration, and material-placement equipment available in case of an unforeseen spill emergency.

6. The methods and procedures to be used for expeditious contaminant cleanup.

k. A non-hazardous solid waste disposal plan identifying methods and locations for solid waste disposal including clearing debris. The plan shall include schedules for disposal. The Contractor shall identify any subcontractors responsible for the transportation and disposal of

solid waste. Licenses or permits shall be submitted for solid waste disposal sites that are not a commercial operating facility. Evidence of the disposal facility's acceptance of the solid waste shall be attached to this plan during the construction. The Contractor shall attach a copy of each of the Non-hazardous Solid Waste Diversion Reports to the disposal plan. The report shall be submitted on the first working day after the first quarter that non-hazardous solid waste has been disposed and/or diverted and shall be for the previous quarter (e.g. the first working day of January, April, July, and October). The report shall indicate the total amount of waste generated and total amount of waste diverted in cubic yards or tons along with the percent that was diverted.

l. A recycling and solid waste minimization plan with a list of measures to reduce consumption of energy and natural resources. The plan shall detail the Contractor's actions to comply with and to participate in Federal, State, Regional, and local government sponsored recycling programs to reduce the volume of solid waste at the source.

m. An air pollution control plan detailing provisions to assure that dust, debris, materials, trash, etc., do not become air borne and travel off the project site.

n. A contaminant prevention plan that: identifies potentially hazardous substances to be used on the job site; identifies the intended actions to prevent introduction of such materials into the air, water, or ground; and details provisions for compliance with Federal, State, and local laws and regulations for storage and handling of these materials. In accordance with EM 385-1-1, a copy of the Material Safety Data Sheets (MSDS) and the maximum quantity of each hazardous material to be on site at any given time shall be included in the contaminant prevention plan. As new hazardous materials are brought on site or removed from the site, the plan shall be updated.

o. A waste water management plan that identifies the methods and procedures for management and/or discharge of waste waters which are directly derived from construction activities, such as concrete curing water, clean-up water, dewatering of ground water, disinfection water, hydrostatic test water, and water used in flushing of lines. If a settling/retention pond is required, the plan shall include the design of the pond including drawings, removal plan, and testing requirements for possible pollutants. If land application will be the method of disposal for the waste water, the plan shall include a sketch showing the location for land application along with a description of the pretreatment methods to be implemented. If surface discharge will be the method of disposal, a copy of the permit and associated documents shall be included as an attachment prior to discharging the waste water. If disposal is to a sanitary sewer, the plan shall include documentation that the Waste Water Treatment Plant Operator has approved the flow rate, volume, and type of discharge.

p. A historical, archaeological, cultural resources biological resources and wetlands plan that defines procedures for identifying and protecting historical, archaeological, cultural resources, biological resources and wetlands known to be on the project site: and/or identifies procedures to be followed if historical archaeological, cultural resources, biological resources and wetlands not previously known to be onsite or in the area are discovered during construction. The plan shall include methods to assure the protection of known or

discovered resources and shall identify lines of communication between Contractor personnel and the Contracting Officer.

q. A pesticide treatment plan shall be included and updated, as information becomes available. The plan shall include: sequence of treatment, dates, times, locations, pesticide trade name, EPA registration numbers, authorized uses, chemical composition, formulation, original and applied concentration, application rates of active ingredient (i.e. pounds of active ingredient applied), equipment used for application and calibration of equipment. The Contractor is responsible for Federal, State, Regional and Local pest management record keeping and reporting requirements as well as any additional specific requirements.

1.7.3 Appendix

Copies of all environmental permits, permit application packages, approvals to construct, notifications, certifications, reports, and termination documents shall be attached,as an appendix, to the Environmental Protection Plan.

1.8 PROTECTION FEATURES

This paragraph supplements the Contract Clause PROTECTION OF EXISTING VEGETATION, STRUCTURES, EQUIPMENT, UTILITIES, AND IMPROVEMENTS. Prior to start of any onsite construction activities, the Contractor and the Contracting Officer shall make a joint condition survey. Immediately following the survey, the Contractor shall prepare a brief report including a plan describing the features requiring protection under the provisions of the Contract Clauses, which are not specifically identified on the drawings as environmental features requiring protection along with the condition of trees, shrubs and grassed areas immediately adjacent to the site of work and adjacent to the Contractor's assigned storage area and access route(s), as applicable. This survey report shall be signed by both the the Contractor and the Contracting Officer upon mutual agreement as to its accuracy and completeness. The Contractor shall protect those environmental features included in the survey report and any indicated on the drawings, regardless of interference which their preservation may cause to the Contractor's work under the contract.

1.9 SPECIAL ENVIRONMENTAL REQUIREMENTS

The Contractor shall comply with the special environmental requirements listed here.

1.10 ENVIRONMENTAL ASSESSMENT OF CONTRACT DEVIATIONS

Any deviations, requested by the Contractor, from the drawings,plans and specifications which may have an environmental impact will be subject to review by the Contracting Officer and may require an extended review, processing, and approval time. The Contracting Officer reserves the right to disapprove alternate methods, even if they are more cost effective, if the Contracting Officer determines that the proposed alternate method will have an adverse environmental impact.

1.11 NOTIFICATION

The Contracting Officer will notify the Contractor in writing of any observed noncompliance with Federal, State or local environmental laws or

regulations, permits, and other elements of the Contractor's Environmental Protection plan. The Contractor shall, after receipt of such notice, inform the Contracting Officer of the proposed corrective action and take such action when approved by the Contracting Officer. The Contracting Officer may issue an order stopping all or part of the work until satisfactory corrective action has been taken. No time extensions shall be granted or equitable adjustments allowed to the Contractor for any such suspensions. This is in addition to any other actions the Contracting Officer may take under the contract, or in accordance with the Federal Acquisition Regulation or Federal Law.

PART 2 PRODUCTS (NOT USED)

PART 3 EXECUTION

3.1 ENVIRONMENTAL PERMITS AND COMMITMENTS

The Contractor shall be responsible for obtaining and complying with all environmental permits and commitments required by Federal, State, Regional, and local environmental laws and regulations.

3.2 LAND RESOURCES

The Contractor shall confine all activities to areas defined by the drawings and specifications. Prior to the beginning of any construction, the Contractor shall identify any land resources to be preserved within the work area. Except in areas indicated on the drawings or specified to be cleared, the Contractor shall not remove, cut, deface, injure, or destroy land resources including trees, shrubs, vines, grasses, topsoil, and land forms without approval. No ropes, cables, or guys shall be fastened to or attached to any trees for anchorage unless specifically authorized. The Contractor shall provide effective protection for land and vegetation resources at all times as defined in the following subparagraphs. Stone, soil, or other materials displaced into uncleared areas shall be removed by the Contractor.

3.2.1 Work Area Limits

Prior to commencing construction activities, the Contractor shall mark the areas that need not be disturbed under this contract. Isolated areas within the general work area which are not to be disturbed shall be marked or fenced. Monuments and markers shall be protected before construction operations commence. Where construction operations are to be conducted during darkness, any markers shall be visible in the dark. The Contractor's personnel shall be knowledgeable of the purpose for marking and/or protecting particular objects.

3.2.2 Landscape

Trees, shrubs, vines, grasses, land forms and other landscape features indicated and defined on the drawings to be preserved shall be clearly identified by marking, fencing, or wrapping with boards, or any other approved techniques. The Contractor shall restore landscape features damaged or destroyed during construction operations outside the limits of the approved work area.

3.2.3 Erosion and Sediment Controls

The Contractor shall be responsible for providing erosion and sediment control measures in accordance with Federal, State, and local laws and regulations. The erosion and sediment controls selected and maintained by the Contractor shall be such that water quality standards are not violated as a result of the Contractor's construction activities. The area of bare soil exposed at any one time by construction operations should be kept to a minimum. The Contractor shall construct or install temporary and permanent erosion and sediment control best management practices (BMPs) [as indicated on the drawings] [as specified in Section 01356 STORM WATER POLLUTION PREVENTION MEASURES]. BMPs may include, but not be limited to, vegetation cover, stream bank stabilization, slope stabilization, silt fences, construction of terraces, interceptor channels, sediment traps, inlet and outfall protection, diversion channels, and sedimentation basins. Any temporary measures shall be removed after the area has been stabilized.

3.2.4 Contractor Facilities and Work Areas

The Contractor's field offices, staging areas, stockpile storage, and temporary buildings shall be placed in areas designated on the drawings or as directed by the Contracting Officer. Temporary movement or relocation of Contractor facilities shall be made only when approved. Erosion and sediment controls shall be provided for on-site borrow and spoil areas to prevent sediment from entering nearby waters. Temporary excavation and embankments for plant and/or work areas shall be controlled to protect adjacent areas.

3.3 WATER RESOURCES

The Contractor shall monitor construction activities to prevent pollution of surface and ground waters. Toxic or hazardous chemicals shall not be applied to soil or vegetation unless otherwise indicated. All water areas affected by construction activities shall be monitored by the Contractor. For construction activities immediately adjacent to impaired surface waters, the Contractor shall be capable of quantifying sediment or pollutant loading to that surface water when required by State or Federally issued Clean Water Act permits.

3.4 AIR RESOURCES

Equipment operation, activities, or processes performed by the Contractor shall be in accordance with all Federal and State air emission and performance laws and standards.

3.4.1 Particulates

Dust particles; aerosols and gaseous by-products from construction activities; and processing and preparation of materials, such as from asphaltic batch plants; shall be controlled at all times, including weekends, holidays and hours when work is not in progress. The Contractor shall maintain excavations, stockpiles, haul roads, permanent and temporary access roads, plant sites, spoil areas, borrow areas, and other work areas within or outside the project boundaries free from particulates which would cause the Federal, State, and local air pollution standards to be exceeded or which would cause a hazard or a nuisance. Sprinkling, chemical treatment of an approved type, baghouse, scrubbers, electrostatic precipitators or other methods will be permitted to control particulates in the work area. Sprinkling, to be efficient, must be repeated to keep the disturbed area damp at all times. The Contractor must have sufficient, competent equipment available to accomplish these tasks. Particulate

control shall be performed as the work proceeds and whenever a particulate nuisance or hazard occurs. The Contractor shall comply with all State and local visibility regulations.

3.4.2 Odors

Odors from construction activities shall be controlled at all times. The odors shall not cause a health hazard and shall be in compliance with State regulations and/or local ordinances.

3.4.3 Sound Intrusions

The Contractor shall keep construction activities under surveillance and control to minimize environment damage by noise. The Contractor shall comply with the provisions of the State of California rules.

3.4.4 Burning

Burning shall be prohibited on the Government premises.

3.5 CHEMICAL MATERIALS MANAGEMENT AND WASTE DISPOSAL

Disposal of wastes shall be as directed below, unless otherwise specified in other sections and/or shown on the drawings.

3.5.1 Solid Wastes

Solid wastes (excluding clearing debris) shall be placed in containers which are emptied on a regular schedule. Handling, storage, and disposal shall be conducted to prevent contamination. Segregation measures shall be employed so that no hazardous or toxic waste will become co-mingled with solid waste. The Contractor shall transport solid waste off Government property and dispose of it in compliance with Federal, State, and local requirements for solid waste disposal. A Subtitle D RCRA permitted landfill shall be the minimum acceptable off-site solid waste disposal option. The Contractor shall verify that the selected transporters and disposal facilities have the necessary permits and licenses to operate.

3.5.2 Chemicals and Chemical Wastes

Chemicals shall be dispensed ensuring no spillage to the ground or water. Periodic inspections of dispensing areas to identify leakage and initiate corrective action shall be performed and documented. This documentation will be periodically reviewed by the Government. Chemical waste shall be collected in corrosion resistant, compatible containers. Collection drums shall be monitored and removed to a staging or storage area when contents are within 6 inches of the top. Wastes shall be classified, managed, stored, and disposed of in accordance with Federal, State, and local laws and regulations.

3.5.3 Contractor Generated Hazardous Wastes/Excess Hazardous Materials

Hazardous wastes are defined in 40 CFR 261, or are as defined by applicable State and local regulations. Hazardous materials are defined in 49 CFR 171 - 178. The Contractor shall, at a minimum, manage and store hazardous waste in compliance with 40 CFR 262 . The Contractor shall take sufficient measures to prevent spillage of hazardous and toxic materials during dispensing. The Contractor shall segregate hazardous waste from other materials and wastes, shall protect it from the weather by placing it

in a safe covered location, and shall take precautionary measures such as berming or other appropriate measures against accidental spillage. The Contractor shall be responsible for storage, describing, packaging, labeling, marking, and placarding of hazardous waste and hazardous material in accordance with 49 CFR 171 - 178, State, and local laws and regulations. The Contractor shall transport Contractor generated hazardous waste off Government property within 60 days in accordance with the Environmental Protection Agency and the Department of Transportation laws and regulations. The Contractor shall dispose of hazardous waste in compliance with Federal, State and local laws and regulations. Spills of hazardous or toxic materials shall be immediately reported to the Contracting Officer. Cleanup and cleanup costs due to spills shall be the Contractor's responsibility. The disposition of Contractor generated hazardous waste and excess hazardous materials are the Contractor's responsibility.

3.5.4 Fuel and Lubricants

Storage, fueling and lubrication of equipment and motor vehicles shall be conducted in a manner that affords the maximum protection against spill and evaporation. Fuel, lubricants and oil shall be managed and stored in accordance with all Federal, State, Regional, and local laws and regulations. Used lubricants and used oil to be discarded shall be stored in marked corrosion-resistant containers and recycled or disposed in accordance with 40 CFR 279, State, and local laws and regulations.

3.5.5 Waste Water

Disposal of waste water shall be as specified below.

a. Waste water from construction activities, such as onsite material processing, concrete curing, foundation and concrete clean-up, water used in concrete trucks, forms, etc. shall not be allowed to enter water ways or to be discharged prior to being treated to remove pollutants. The Contractor shall dispose of the construction related waste water off-Government property in accordance with all Federal, State, Regional and Local laws and regulations.

b. For discharge of ground water, the Contractor shall obtain a State or Federal permit specific for pumping and discharging ground water prior to surface discharging. Land application shall be in accordance with all Federal, State, Regional, and/or Local laws and regulations for pumping and land applying ground water.]

c. Water generated from the flushing of lines after hydrostatic testing] shall be land applied in accordance with all Federal, State, and local laws and regulations for land application.

3.6 RECYCLING AND WASTE MINIMIZATION

The Contractor shall participate in State and local government sponsored recycling programs. The Contractor is further encouraged to minimize solid waste generation throughout the duration of the project.

3.7 NON-HAZARDOUS SOLID WASTE DIVERSION REPORT

The Contractor shall maintain an inventory of non-hazardous solid waste diversion and disposal of construction and demolition debris. The Contractor shall submit a report through the Contracting Officer on the

first working day after each fiscal year quarter, starting the first quarter that non-hazardous solid waste has been generated. The following shall be included in the report:

a. Construction and Demolition (C&D) Debris Disposed = in cubic yards or tons, as appropriate.

b. Construction and Demolition (C&D) Debris Recycled = in cubic yards or tons, as appropriate.

3.8 HISTORICAL, ARCHAEOLOGICAL, AND CULTURAL RESOURCES

Existing historical, archaeological, and cultural resources within the Contractor's work area are shown on the drawings. The Contractor shall protect these resources and shall be responsible for their preservation during the life of the Contract. If during excavation or other construction activities any previously unidentified or unanticipated historical, archaeological, and cultural resources are discovered or found, all activities that may damage or alter such resources shall be temporarily suspended. Resources covered by this paragraph include but are not limited to: any human skeletal remains or burials; artifacts; shell, midden, bone, charcoal, or other deposits; rock or coral alignments, pavings, wall, or other constructed features; and any indication of agricultural or other human activities. Upon such discovery or find, the Contractor shall immediately notify the Contracting Officer so that the appropriate authorities may be notified and a determination made as to their significance and what, if any, special disposition of the finds should be made. The Contractor shall cease all activities that may result in impact to or the destruction of these resources. The Contractor shall secure the area and prevent employees or other persons from trespassing on, removing, or otherwise disturbing such resources.

3.9 BIOLOGICAL RESOURCES

The Contractor shall minimize interference with, disturbance to, and damage to fish, wildlife, and plants including their habitat. The Contractor shall be responsible for the protection of threatened and endangered animal and plant species including their habitat in accordance with Federal, State, Regional, and local laws and regulations.

3.9.1 Fish and Wildlife

The Contractor shall minimize interference with, disturbance to, and damage of fish and wildlife. Species that require specific attention along with measures for their protection shall be listed by the Contractor prior to beginning of construction operations.

(A) Wild Life Encounters During Construction:

It is not anticipated that there will be an abundance of wild life encounters at the project site. However, should the Contractor discover animals living within the construction boundaries, operation shall be suspended at the site of discovery and continued in other areas. The Contractor shall notify the Contracting Officer and Biological Monitor immediately of the finding. Included with the notification shall be a brief statement to the Contracting Officer and Biological Monitor of the location and the findings. How to identify sensitive animals that may be

discovered will be provided at the Preconstruction Conference.

(B) Desert Tortoise:

Contractor employees shall not touch, harm, harass, or kill desert tortoises. The Biological Monitor shall be notified immediately of all desert tortoise sightings. The Biological Monitor will be responsible for removing desert tortoises out of immediate dangers. Should construction activities threaten the survival of any desert tortoises, those activities will immediately cease until the Biological Monitor safely removes the tortoise(s). The Biological Monitor shall perform clearance surveys in all areas of planned disturbance. The Biological Monitor will be available to accompany construction crews during period of tortoise activity to provide protection of these animals and their burrows.

(1) The Contractor shall implement an employees environmental awareness program which will be provided to construction and operation employees with information to encourage awareness and preservation of the desert ecosystem and the resources found in the Western Mojave Desert. This information shall be distributed to and discussed with all employees during employee orientation sessions. This information shall also be provided to all visitors and subcontractors that will be on-site. The Contractor shall have all persons participating in the environmental awareness program sign and affidavit declaring that the individual understands and will adhere to the guidelines set forth in the program material.

(2) The Contractor shall develop a strict trash and litter control program. A litter control program shall consist of supplying an adequate number of covered trash and litter receptacles in all appropriate locations.

The Contractor shall minimize interference with, disturbance to, and damage of fish and wildlife. Species that require specific attention along with measures for their protection shall be listed by the Contractor prior to beginning of construction operations.

(C) Protection of Fish and Wildlife Resources:

(1) Kit Fox:

The Contractor shall do a pre-activity survey for Kit Fox presence that shall be conducted by a certified Kit Fox Biologist within 60 days physically starting construction of the project site. The survey shall cover all off road areas which will be impacted from ground disturbing activities associated with projects. The survey shall define a project zone for construction activities and exclusion zones shall be established around dens found within the project area. No ground disturbance or vehicle traffic is allowed within the exclusion zones. If an established roadway falls within an exclusion zone, vehicle traffic will be allowed only if critical need exists and alternate routes are not available. Foot traffic ell be allowed for transit only when necessary and when alternate routes are not available. Exclusion zones will be based on the following criteria:

a. Potential den, 15 m (50 feet) radius
b. Known den, 30 m (100 feet) radius
c. Known natal or pupping den, 45 m (150 feet) radius

(2) Dens

Potential dens are defined as dens (ground holes) having entrances of sufficient size to allow use by San Joaquin kit fox, and that occur in habitat suitable for kit fox. Known dens are those known to be currently inhabited by kit fox, or where kit fox have been observed in the past. Know natal or pupping dens are those dens where pregnant females or females with pups have been observed. The exclusion radius is measured from the center of a single den, or from the center of a group of dens.

(3) Zones

Exclusions zones shall be clearly staked, encircled with cord or tape, and flagged. Establishment of exclusion zones shall be done by a qualified wildlife biologist listed in submittal section.

(4) Vehicle Traffic

Construction activities shall be designed to minimize off road vehicle traffic. The contractor shall make use of existing roads, trails, and previously disturbed areas wherever possible. Parking and staging areas shall be clearly delineated to prevent unnecessary disturbance to the adjacent areas. All vehicle traffic shall be limited to 20 miles per hour, except where otherwise posted.

(5) Construction Activities

Construction activities shall be limited to the smallest possible area(s) of disturbance and night time construction activities are prohibited.

(6) Accidental Entrapment Measures

The following measures shall be implemented to avoid accidental entrapment of animals:

a. All steep-sided excavations greater than three (3) feet deep shall be covered or filled at the end of each working day or shall be equipped with earth or plank escape ramps. Escape ramps shall be placed at a 45 degree angle, 12 inches wide and continuous from the bottom of the excavation to the top.

b. All excavations shall be thoroughly inspected for animals prior to sealing or refilling to avoid accidental burial. Permanent and semi-permanent structures installed in ground or underground shall be constructed so that animals will not become trapped within.

c. Any pipe, culvert, or similar material with an inside diameter of four (4) inches or more shall be thoroughly inspected for animals prior to sealing or reconnecting. If animals are found inside the materials, the material shall not be used until the animal vacates or is conducted out of the area. Pipelines temporarily left open in place shall be covered or blocked until work is completed.

(7) Destruction of Dens

Planned, intentional destruction of dens may be allowed, but should

be avoided except where absolutely necessary. Planned destruction of any den(s) shall require notification to the government representative who will provide written notification to the U. S. Fish and Wildlife Service, and shall require their concurrence. Intentional den destruction shall occur only under the direct supervision of a certified kit fox biologist.

(8) Restoration of Areas

Contour and restoration of disturbed areas shall be performed following the conclusion of a project or activity. All temporary excavations shall be filled in, contoured, and vegetated to restore as closely as possible the existing condition of the site(s). Construction shall be blended into the surrounding landscape and vegetated. Local or California native plant species shall be used. All trash, especially food-related items, shall be deposited in closed containers or bags and removed from the site daily.

(9) Toxic Chemicals

Use of toxic chemicals such as rodenticide and herbicides shall be in strict accordance with Federal, State, local, and Army regulations. Government review is required for any pesticide use by the contractor or any of his subcontractors.

(10) Project Briefing

Project or activity supervisors will be briefed on environmental and conservation procedures prior to commencement. The briefing will include information on endangered species and other environmental concerns and conservation measures. Supervisors will then be responsible for dissemination of this information to the project or activity personnel, and implantation of the procedures discussed.

(11) Encounters

Anyone encountering dead, injured, or trapped animal shall immediately notify their supervisor. The supervisor shall in turn notify the appropriate government representative. The following guidelines shall be observed:

a. Trapped animals: Cease activity in the immediate vicinity. Provide a ramp or other means of escape if practicable. ADO NOT attempt to grasp or hold a wild animal.

b. Injured animals): DO NOT ATTEMPT TO HANDLE THE ANIMAL! Note the type and severity of injury if possible, the location and the time the animal was found. Notify SATCOM personnel at (805) 238-8675.

c. Dead animals: DO not touch or move the carcass, and avoid disturbing the area around the carcass. Mark the location and notify SATCOM personnel at (805) 238-8675.

(12) Additional Requirements

a. No pets will be allowed on Camp Roberts or the SATCOM facility at any time.

b. Firearms are prohibited.

c. The contractor supervisors shall attend a one hour workshop on environmental and conservation procedures by the Government. The briefing shall include information on endangered species and other environment concerns and conservation measures. Supervisors shall then be responsible for dissemination of this information to the project tor activity personnel, and implementation of the procedures discussed.

d. Contractor shall use a wildlife biologist approved by the U.S. Fish and Wildlife Service and follow all requirements for the following: U.S. Fish and Wildlife Service, 1989, standardized recommendation for protection of the San Joaquin Kit Fox, April 1989; endangered Species Office, Sacramento, CA.

3.9.2 Protection of Endangered Trees:

(A) Endangered Trees within Project Site:

Due to the limited vegetation in the area, removal or relocation of plants shall be minimized. The Contractor shall obtain approval from the Contracting Officer before removing or relocating any endangered plants within the construction boundaries. One such plant is the Joshua Tree which is an endangered species. How to identify this tree and procedures for relocating those within the project site, are described as follows:

(B) Joshua Trees:

Only trees under 5 feet tall shall be moved using hand tools. Mark North side of the tree and plant in same orientation. Using shovel, dig down to get main root mass (generally within 2 feet of surface). Try to get tap root and a fibrous water storage structure that it leads to. Take some of the soil to put in new hole. Roots should be dusted with sulfur to prevent rot. A small amount of manure can be mixed in with soil when replanting. Soil should be tamped down and a small berm placed around plant 5-foot diameter. Water with several gallons. Stake in 2 directions to prevent wind from knocking down. If not transplanted right away, "heel in" the plant (lay them on their side and cover roots with soil). Very large Joshua Trees (10-20 feet tall) shall not be moved but be detoured around by the utilities. If plants need relocation areas, they can be used in landscaping around the base.

3.10 INTEGRATED PEST MANAGEMENT

In order to minimize impacts to existing fauna and flora, the Contractor, through the Contracting Officer, shall coordinate with the at the earliest possible time prior to pesticide application. The Contractor shall discuss integrated pest management strategies with the IPMC and receive concurrence from the IPMC through the COR prior to the application of any pesticide associated with these specifications. Pest Management personnel shall be given the opportunity to be present at all meetings concerning treatment measures for pest or disease control and during application of the pesticide.

3.10.1 Pesticide Delivery and Storage

Pesticides shall be delivered to the site in the original, unopened containers bearing legible labels indicating the EPA registration number and the manufacturer's registered uses. Pesticides shall be stored according to manufacturer's instructions and under lock and key when unattended.

3.10.2 Qualifications

For the application of pesticides, the Contractor shall use the services of a subcontractor whose principal business is pest control. The subcontractor shall be licensed and certified in the state where the work is to be performed.

3.10.3 Pesticide Handling Requirements

The Contractor shall formulate, treat with, and dispose of pesticides and associated containers in accordance with label directions and shall use the clothing and personal protective equipment specified on the labeling for use during all phases of the application. Material Safety Data Sheets (MSDS)shall be available for all pesticide products.

3.10.4 Application

Pesticides shall be applied by a State Certified Pesticide Applicator in accordance with EPA label restrictions and recommendation. The Certified Applicator shall wear clothing and personal protective equipment as specified on the pesticide label. Water used for formulating shall only come from locations designated by the Contracting Officer. The Contractor shall not allow the equipment to overflow. Prior to application of pesticide, all equipment shall be inspected for leaks, clogging, wear, or damage and shall be repaired prior to being used.

3.11 PREVIOUSLY USED EQUIPMENT

The Contractor shall clean all previously used construction equipment prior to bringing it onto the project site. The Contractor shall ensure that the equipment is free from soil residuals, egg deposits from plant pests, noxious weeds, and plant seeds. The Contractor shall consult with the USDA jurisdictional office for additional cleaning requirements.

3.12 MAINTENANCE OF POLLUTION FACILITIES

The Contractor shall maintain permanent and temporary pollution control facilities and devices for the duration of the contract or for that length of time construction activities create the particular pollutant.

3.13 TRAINING OF CONTRACTOR PERSONNEL

The Contractor's personnel shall be trained in all phases of environmental protection and pollution control. The Contractor shall conduct environmental protection/pollution control meetings for all Contractor personnel prior to commencing construction activities. Additional meetings shall be conducted for new personnel and when site conditions change. The training and meeting agenda shall include: methods of detecting and avoiding pollution; familiarization with statutory and contractual pollution standards; installation and care of devices, vegetative covers, and instruments required for monitoring purposes to ensure adequate and continuous environmental protection/pollution control; anticipated hazardous or toxic chemicals or wastes, and other regulated contaminants; recognition and protection of archaeological sites, artifacts, wetlands, and endangered species and their habitat that are known to be in the area.

3.14 POST CONSTRUCTION CLEANUP

The Contractor shall clean up all areas used for construction in accordance with Contract Clause: "Cleaning Up". The Contractor shall, unless otherwise instructed in writing by the Contracting Officer, obliterate all signs of temporary construction facilities such as haul roads, work area, structures, foundations of temporary structures, stockpiles of excess or waste materials, and other vestiges of construction prior to final acceptance of the work. The disturbed area shall be graded, filled and the entire area seeded unless otherwise indicated.

-- End of Section --

SECTION TABLE OF CONTENTS

DIVISION 01 - GENERAL REQUIREMENTS

01451

CONTRACTOR QUALITY CONTROL

PART 1 GENERAL

1.1 REFERENCES

PART 2 PRODUCTS (Not Applicable)

PART 3 EXECUTION

3.1 GENERAL REQUIREMENTS
3.2 QUALITY CONTROL PLAN
3.2.1 Content of the CQC Plan
3.2.1.1 Design Quality Control Plan (DQCP)
3.2.2 Acceptance of Plan
3.2.3 Notification of Changes
3.3 COORDINATION MEETING
3.4 QUALITY CONTROL ORGANIZATION
3.4.1 Personnel Requirements
3.4.2 CQC System Manager
3.4.3 Additional Requirement
3.4.4 Organizational Changes
3.5 SUBMITTALS AND DELIVERABLES
3.6 CONTROL
3.6.1 Preparatory Phase
3.6.2 Initial Phase
3.6.3 Follow-up Phase
3.6.4 Additional Preparatory and Initial Phases
3.7 TESTS
3.7.1 Testing Procedure
3.7.2 Testing Laboratories
3.7.2.1 Capability Check
3.7.2.2 Quality Assurance Check
3.7.3 Onsite Laboratory
3.7.4 Furnishing or Transportation of Samples for Testing
3.8 COMPLETION INSPECTION
3.8.1 Punch-Out Inspection
3.8.2 Pre-Final Inspection
3.8.3 Final Acceptance Inspection
3.9 DOCUMENTATION
3.10 IMPLEMENTATION OF GOVERNMENT RESIDENT MANAGEMENT SYSTEM FOR CONTRACTOR QUALITY CONTROL OF CONTRACT
3.11 NOTIFICATION OF NONCOMPLIANCE
3.12 CONSTRUCTION CONTROL MANUAL

-- End of Section Table of Contents --

01451

CONTRACTOR QUALITY CONTROL

PART 1 GENERAL

1.1 REFERENCES

The publications listed below form a part of this specification to the extent referenced. The publications are referred to in the text by basic designation only.

AMERICAN SOCIETY FOR TESTING AND MATERIALS (ASTM)

ASTM C 1077	(1996) Standard Practice for Laboratories Testing Concrete and Concrete Aggregates for Use in Construction and Criteria for Laboratory Evaluation
ASTM D 3666	(1996) Standard Specification for Minimum Requirements for Agencies Testing and Inspecting Bituminous Paving Materials
ASTM D 3740	(1996) Minimum Requirements for Agencies Engaged in the Testing and/or Inspection of Soil and Rock as Used in Engineering Design and Construction
ASTM E 329	(1995b) Agencies Engaged in the Testing and/or Inspection of Materials Used in Construction

PART 2 PRODUCTS (Not Applicable)

PART 3 EXECUTION

3.1 GENERAL REQUIREMENTS

The Contractor is responsible for quality control and shall establish and maintain an effective quality control system in compliance with the Contract Clause titled "Inspection of Construction." The quality control system shall consist of plans, procedures, and organization necessary to produce an end product which complies with the contract requirements. The system shall cover all construction operations, both onsite and offsite, and shall be keyed to the proposed construction sequence. The project superintendent will be held responsible for the quality of work on the job and is subject to removal by the Contracting Officer for non-compliance with quality requirements specified in the contract. The project superintendent in this context shall mean the individual with the responsibility for the overall management of the project including quality and production.

3.2 QUALITY CONTROL PLAN

The Contractor shall furnish for review by the Government, not later than 15 days after receipt of notice to proceed, the Contractor Quality Control (CQC) Plan proposed to implement the requirements of the Contract Clause

titled "Inspection of Construction." The plan shall identify personnel, procedures, control, instructions, tests, records, and forms to be used. [The Government will consider an interim plan for the first 60 days of operation. Construction will be permitted to begin only after acceptance of the CQC Plan or acceptance of an interim plan applicable to the particular feature of work to be started. Work outside of the features of work included in an accepted interim plan will not be permitted to begin until acceptance of a CQC Plan] or another interim plan containing the additional features of work to be started.

3.2.1 Content of the CQC Plan

The CQC Plan shall include, as a minimum, the following to cover all construction operations, both onsite and offsite, including work by subcontractors, fabricators, suppliers, and purchasing agents:

a. A description of the quality control organization, including a chart showing lines of authority and acknowledgment that the CQC staff shall implement the three phase control system for all aspects of the work specified. The staff shall include a CQC System Manager who shall report to the project superintendent.

b. The name, qualifications (in resume format), duties, responsibilities, and authorities of each person assigned a CQC function.

c. A copy of the letter to the CQC System Manager signed by an authorized official of the firm which describes the responsibilities and delegates sufficient authorities to adequately perform the functions of the CQC System Manager, including authority to stop work which is not in compliance with the contract. The CQC System Manager shall issue letters of direction to all other various quality control representatives outlining duties, authorities, and responsibilities. Copies of these letters shall also be furnished to the Government.

d. Procedures for scheduling, reviewing, certifying, and managing submittals, including those of subcontractors, offsite fabricators, suppliers, and purchasing agents. These procedures shall be in accordance with Section 01330 SUBMITTAL PROCEDURES.

e. Control, verification, and acceptance testing procedures for each specific test to include the test name, specification paragraph requiring test, feature of work to be tested, test frequency, and person responsible for each test. (Laboratory facilities will be approved by the Contracting Officer.)

f. Procedures for tracking preparatory, initial, and follow-up control phases and control, verification, and acceptance tests including documentation.

g. Procedures for tracking construction deficiencies from identification through acceptable corrective action. These procedures shall establish verification that identified deficiencies have been corrected.

h. Reporting procedures, including proposed reporting formats.

i. A list of the definable features of work. A definable feature of

work is a task which is separate and distinct from other tasks, has separate control requirements, and may be identified by different trades or disciplines, or it may be work by the same trade in a different environment. Although each section of the specifications may generally be considered as a definable feature of work, there are frequently more than one definable features under a particular section. This list will be agreed upon during the coordination meeting.

3.2.1.1 Design Quality Control Plan (DQCP)

The Contractor's DQC Plan shall provide and maintain an effective quality control program which will assure that all services required by this design-build contract are performed and provided in a manner that meets professional architectural and engineering quality standards. The Contractor's DQC Plan shall be prepared in accordance with CESPDR 1110-1-8, "Quality Management Plan", Appendix (http://www.spd.usace.army.mil/qmp.html).
As a minimum, all documents shall be technically reviewed by competent, independent reviewers identified in the DQC Plan. Performance of the independent technical review (ITR) should not be accomplished by the same element that produced the product. In addition, the DQC Plan shall incorporate the Lessons Learned Databases provided by the Government. Errors and deficiencies in the design documents shall be corrected prior to submitting them to the Government.

The Contractor shall include in the DQC plan a time-scaled bar chart or Critical Path Method (CPM) design schedule showing the sequence of events involved in carrying out the project tasks within the specific contract period. This should be at a detailed level of scheduling sufficient to identify all major tasks including those that control the flow of work. The bar chart or schedule shall include review and correction periods proper to submittal of each item. This should be a forward planning as well as a project monitoring tool. The bar chart or schedule reflects calendar days and not dates for each activity. If the schedule is changed, the Contractor shall submit a revised bar chart or schedule reflecting the change within seven calendar days. The Contractor shall include in the DQC Plan the discipline-specific checklists to be used during the design and quality control of each submittal. These completed checklists shall be submitted at each design phase as part of the project documentation. Example checklists can be found in ER 1110-1-12.

The DQC Plan shall be implemented by an assigned person with the Contractor's organization who has the responsibility of being present during the times work is in progress, and shall be cognizant of and assure that all documents on the project have been coordinated. This individual shall be a person who has verifiable engineering or architectural design experience and is a registered professional engineer or architect. The Contractor shall notify the Contracting Officer, in writing, of the name of the individual and the name of an alternate person assigned to the position.

The Contracting Officer will notify the Contractor, in writing, of the acceptance of the DQC Plan. After acceptance, any changes proposed by the Contractor are subject to the acceptance of the Contracting Officer.

3.2.2 Acceptance of Plan

Acceptance of the Contractor's plan is required prior to the start of

construction. Acceptance is conditional and will be predicated on satisfactory performance during the construction. The Government reserves the right to require the Contractor to make changes in his CQC Plan and operations including removal of personnel, as necessary, to obtain the quality specified.

3.2.3 Notification of Changes

After acceptance of the CQC Plan, the Contractor shall notify the Contracting Officer in writing of any proposed change. Proposed changes are subject to acceptance by the Contracting Officer.

3.3 COORDINATION MEETING

After the Preconstruction Conference, before start of construction, and prior to acceptance by the Government of the CQC Plan, the Contractor shall meet with the Contracting Officer or Authorized Representative and discuss the Contractor's quality control system. The CQC Plan shall be submitted for review a minimum of 14 calendar days prior to the Coordination Meeting. During the meeting, a mutual understanding of the system details shall be developed, including the forms for recording the CQC operations, control activities, testing, administration of the system for both onsite and offsite work, and the interrelationship of Contractor's Management and control with the Government's Quality Assurance. Minutes of the meeting shall be prepared by the Government and signed by both the Contractor and the Contracting Officer. The minutes shall become a part of the contract file. There may be occasions when subsequent conferences will be called by either party to reconfirm mutual understandings and/or address deficiencies in the CQC system or procedures which may require corrective action by the Contractor.

3.4 QUALITY CONTROL ORGANIZATION

3.4.1 Personnel Requirements

The requirements for the CQC organization are a CQC System Manager and sufficient number of additional qualified personnel to ensure contract compliance. The Contractor shall provide a CQC organization which shall be at the site at all times during progress of the work and with complete authority to take any action necessary to ensure compliance with the contract. All CQC staff members shall be subject to acceptance by the Contracting Officer.

3.4.2 CQC System Manager

The Contractor shall identify as CQC System Manager an individual within his organization at the site of the work who shall be responsible for overall management of CQC and have the authority to act in all CQC matters for the Contractor. The CQC System Manager shall have a minimum of 3 years construction experience as CQC System Manager on construction similar to this contract. This CQC System Manager shall be on the site at all times during construction and will be employed by the prime Contractor. The CQC System Manager shall be assigned no other duties. An alternate for the CQC System Manager will be identified in the plan to serve in the event of the System Manager's absence. The requirements for the alternate will be the same as for the designated CQC System Manager.

The Contractor shall identify as CQC System Manager an individual within

his organization at the site of the work who shall be responsible for overall management of CQC and have the authority to act in all CQC matters for the Contractor. The CQC System Manager shall be a construction person with a minimum of 5 years in related work. This CQC System Manager shall be on the site at all times during construction and will be employed by the prime Contractor. The CQC System Manager shall be assigned no other duties. An alternate for the CQC System Manager will be identified in the plan to serve in the event of the System Manager's absence. The requirements for the alternate will be the same as for the designated CQC System Manager.

The Contractor shall identify as CQC System Manager an individual within his organization at the site of the work who shall be responsible for overall management of CQC and have the authority to act in all CQC matters for the Contractor. The CQC System Manager shall be a construction person with a minimum of 5 years in related work. This CQC System Manager shall be on the site at all times during construction and will be employed by the prime Contractor. The CQC System Manager shall be assigned as System Manager but may have duties as project superintendent in addition to quality control. An alternate for the CQC System Manager will be identified in the plan to serve in the event of the System Manager's absence. The requirements for the alternate will be the same as for the designated CQC System Manager.

3.4.3 Additional Requirement

In addition to the above experience the CQC System Manager shall have completed the course entitled "Construction Quality Management For Contractors". This course is offered quarterly by the Los Angeles District, contact the Contracting Officer for more information.

3.4.4 Organizational Changes

The Contractor shall maintain the CQC staff at full strength at all times. When it is necessary to make changes to the CQC staff, the Contractor shall revise the CQC Plan to reflect the changes and submit the changes to the Contracting Officer for acceptance.

3.5 SUBMITTALS AND DELIVERABLES

Submittals, if needed, shall be made as specified in Section 01330 SUBMITTAL PROCEDURES. The CQC organization shall be responsible for certifying that all submittals and deliverables are in compliance with the contract requirements.

3.6 CONTROL

Contractor Quality Control is the means by which the Contractor ensures that the construction, to include that of subcontractors and suppliers, complies with the requirements of the contract. At least three phases of control shall be conducted by the CQC System Manager for each definable feature of work as follows:

3.6.1 Preparatory Phase

This phase shall be performed prior to beginning work on each definable feature of work, after all required plans/documents/materials are approved/accepted, and after copies are at the work site. This phase shall include:

a. A review of each paragraph of applicable specifications, reference codes, and standards. A copy of those sections of referenced codes and standards applicable to that portion of the work to be accomplished in the field shall be made available by the Contractor at the preparatory inspection. These copies shall be maintained in the field and available for use by Government personnel until final acceptance of the work.

b. A review of the contract drawings.

c. A check to assure that all materials and/or equipment have been tested, submitted, and approved.

d. Review of provisions that have been made to provide required control inspection and testing.

e. Examination of the work area to assure that all required preliminary work has been completed and is in compliance with the contract.

f. A physical examination of required materials, equipment, and sample work to assure that they are on hand, conform to approved shop drawings or submitted data, and are properly stored.

g. A review of the appropriate activity hazard analysis to assure safety requirements are met.

h. Discussion of procedures for controlling quality of the work including repetitive deficiencies. Document construction tolerances and workmanship standards for that feature of work.

i. A check to ensure that the portion of the plan for the work to be performed has been accepted by the Contracting Officer.

j. Discussion of the initial control phase.

k. The Government shall be notified at least 48 hours in advance of beginning the preparatory control phase. This phase shall include a meeting conducted by the CQC System Manager and attended by the superintendent, other CQC personnel (as applicable), and the foreman responsible for the definable feature. The results of the preparatory phase actions shall be documented by separate minutes prepared by the CQC System Manager and attached to the daily CQC report. The Contractor shall instruct applicable workers as to the acceptable level of workmanship required in order to meet contract specifications.

3.6.2 Initial Phase

This phase shall be accomplished at the beginning of a definable feature of work. The following shall be accomplished:

a. A check of work to ensure that it is in full compliance with contract requirements. Review minutes of the preparatory meeting.

b. Verify adequacy of controls to ensure full contract compliance. Verify required control inspection and testing.

c. Establish level of workmanship and verify that it meets minimum acceptable workmanship standards. Compare with required sample panels as appropriate.

d. Resolve all differences.

e. Check safety to include compliance with and upgrading of the safety plan and activity hazard analysis. Review the activity analysis with each worker.

f. The Government shall be notified at least 48 hours in advance of beginning the initial phase. Separate minutes of this phase shall be prepared by the CQC System Manager and attached to the daily CQC report. Exact location of initial phase shall be indicated for future reference and comparison with follow-up phases.

g. The initial phase should be repeated for each new crew to work onsite, or any time acceptable specified quality standards are not being met.

3.6.3 Follow-up Phase

Daily checks shall be performed to assure control activities, including control testing, are providing continued compliance with contract requirements, until completion of the particular feature of work. The checks shall be made a matter of record in the CQC documentation. Final follow-up checks shall be conducted and all deficiencies corrected prior to the start of additional features of work which may be affected by the deficient work. The Contractor shall not build upon nor conceal non-conforming work.

3.6.4 Additional Preparatory and Initial Phases

Additional preparatory and initial phases shall be conducted on the same definable features of work if: the quality of on-going work is unacceptable; if there are changes in the applicable CQC staff, onsite production supervision or work crew; if work on a definable feature is resumed after a substantial period of inactivity; or if other problems develop.

3.7 TESTS

3.7.1 Testing Procedure

The Contractor shall perform specified or required tests to verify that control measures are adequate to provide a product which conforms to contract requirements. Upon request, the Contractor shall furnish to the Government duplicate samples of test specimens for possible testing by the Government. Testing includes operation and/or acceptance tests when specified. The Contractor shall procure the services of an independent commercial laboratory that has been approved by the Resident Engineer. In addition, the laboratory shall be submitted as part of the Contractor's Quality Control Plan and approved by the Contracting Officer. The Contractor shall perform the following activities and record and provide the following data:

a. Verify that testing procedures comply with contract requirements.

b. Verify that facilities and testing equipment are available and

comply with testing standards.

c. Check test instrument calibration data against certified standards.

d. Verify that recording forms and test identification control number system, including all of the test documentation requirements, have been prepared.

e. Results of all tests taken, both passing and failing tests, shall be recorded on the CQC report for the date taken. Specification paragraph reference, location where tests were taken, and the sequential control number identifying the test shall be given. If approved by the Contracting Officer, actual test reports may be submitted later with a reference to the test number and date taken. An information copy of tests performed by an offsite or commercial test facility shall be provided directly to the Contracting Officer. Failure to submit timely test reports as stated may result in nonpayment for related work performed and disapproval of the test facility for this contract.

3.7.2 Testing Laboratories

3.7.2.1 Capability Check

The Contractor shall use an independent commercial laboratory that has been inspected by the AASHTO Materials Reference Laboratory (AMRL) or the Cement and Concrete Reference Laboratory (CCRL), as applicable, for the required test methods. The inspection report(s) and the written response(s) to any noted deficiencies shall be included with the Contractor Quality Control Plan and will be subject to approval by the Resident Engineer. Laboratories utilized for testing soils, concrete, asphalt, or steel shall meet the applicable requirements of ASTM D 3740, C 1077, D3666 and E 329.

3.7.2.2 Quality Assurance Check

The Government reserves the right to perform a quality assurance check of the laboratory equipment and procedures.

3.7.3 Onsite Laboratory

The Government reserves the right to utilize the Contractor's control testing laboratory and equipment to make assurance tests, and to check the Contractor's testing procedures, techniques, and test results at no additional cost to the Government.

3.7.4 Furnishing or Transportation of Samples for Testing

Costs incidental to the transportation of samples or materials will be borne by the Contractor. Samples of materials for test verification and acceptance testing by the Government shall be delivered to the QA laboratory designated by the Contracting Officer.

Coordination for each specific test, exact delivery location and dates will be made through the Area Office.

3.8 COMPLETION INSPECTION

3.8.1 Punch-Out Inspection

Near the end of the work, or any increment of the work established by a time stated in the Special Clause, "Commencement, Prosecution, and Completion of Work", or by the specifications, the CQC Manager shall conduct an inspection of the work. A punch list of items which do not conform to the approved drawings and specifications shall be prepared and included in the CQC documentation, as required by paragraph DOCUMENTATION. The list of deficiencies shall include the estimated date by which the deficiencies will be corrected. The CQC System Manager or staff shall make a second inspection to ascertain that all deficiencies have been corrected. Once this is accomplished, the Contractor shall notify the Government that the facility is ready for the Government Pre-Final inspection.

3.8.2 Pre-Final Inspection

The Government will perform the pre-final inspection to verify that the facility is complete and ready to be occupied. A Government Pre-Final Punch List may be developed as a result of this inspection. The Contractor's CQC System Manager shall ensure that all items on this list have been corrected before notifying the Government, so that a Final inspection with the customer can be scheduled. Any items noted on the Pre-Final inspection shall be corrected in a timely manner. These inspections and any deficiency corrections required by this paragraph shall be accomplished within the time slated for completion of the entire work or any particular increment of the work if the project is divided into increments by separate completion dates.

3.8.3 Final Acceptance Inspection

The Contractor's Quality Control Inspection personnel, plus the superintendent or other primary management person, and the Contracting Officer's Representative shall be in attendance at the final acceptance inspection. Additional Government personnel including, but not limited to, those from Base/Post Civil Facility Engineer user groups, and major commands may also be in attendance. The final acceptance inspection will be formally scheduled by the Contracting Officer based upon results of the Pre-Final inspection. Notice shall be given to the Contracting Officer at least 14 days prior to the final acceptance inspection and shall include the Contractor's assurance that all specific items previously identified to the Contractor as being unacceptable, along with all remaining work performed under the contract, will be complete and acceptable by the date scheduled for the final acceptance inspection. Failure of the Contractor to have all contract work acceptably complete for this inspection will be cause for the Contracting Officer to bill the Contractor for the Government's additional inspection cost in accordance with the contract clause titled "Inspection of Construction".

3.9 DOCUMENTATION

The Contractor shall maintain current records providing factual evidence that required quality control activities and/or tests have been performed. These records shall include the work of subcontractors and suppliers and shall be on an acceptable form that includes, as a minimum, the following information:

a. Contractor/subcontractor and their area of responsibility.

b. Operating plant/equipment with hours worked, idle, or down for repair.

c. Work performed each day, giving location, description, and by whom. When Network Analysis (NAS) is used, identify each phase of work performed each day by NAS activity number.

d. Test and/or control activities performed with results and references to specifications/drawings requirements. The control phase shall be identified (Preparatory, Initial, Follow-up). List of deficiencies noted, along with corrective action.

e. Quantity of materials received at the site with statement as to acceptability, storage, and reference to specifications/drawings requirements.

f. Submittals and deliverables reviewed, with contract reference, by whom, and action taken.

g. Offsite surveillance activities, including actions taken.

h. Job safety evaluations stating what was checked, results, and instructions or corrective actions.

i. Instructions given/received and conflicts in plans and/or specifications.

j. Contractor's verification statement.

These records shall indicate a description of trades working on the project; the number of personnel working; weather conditions encountered; and any delays encountered. These records shall cover both conforming and deficient features and shall include a statement that equipment and materials incorporated in the work and workmanship comply with the contract. The original and one copy of these records in report form shall be furnished to the Government daily within 24 hours after the date covered by the report, except that reports need not be submitted for days on which no work is performed. As a minimum, one report shall be prepared and submitted for every 7 days of no work and on the last day of a no work period. All calendar days shall be accounted for throughout the life of the contract. The first report following a day of no work shall be for that day only. Reports shall be signed and dated by the CQC System Manager. The report from the CQC System Manager shall include copies of test reports and copies of reports prepared by all subordinate quality control personnel.

3.10 IMPLEMENTATION OF GOVERNMENT RESIDENT MANAGEMENT SYSTEM FOR CONTRACTOR QUALITY CONTROL OF CONTRACT

The Contractor shall utilize a Government furnished CQC Programming Module (A computerized executable file which is DOS based and operates on a minimum of 80386 IBM compatible computers). The Module includes a Daily CQC Reporting System form which must also be used. This form may be in addition to other Contractor desired reporting forms. However, all other such reporting forms shall be consolidated into this one Government specified Daily CQC Report Form. The Contractor will also be required to complete Government-Furnished Module elements which includes, but is not limited to, Prime Contractor staffing; letter codes; planned cumulative progress earnings; subcontractor information showing trade, name, address, point-of-contact, and insurance expiration dates; definable features of work; pay activity and activity information; required Quality Control tests tied to individual activities; planned User Schooling tied to specific

specification paragraphs and contractor activities; Installed Property Listing, Transfer Property Listing and submittal information relating to specification section, description, activity number, review period and expected procurement period. The sum of all activity values shall equal the contract amount, and all Bid Items, Options and Additives shall be separately identified, in accordance with the "Pricing Schedule". Bid Items may include multiple Activities, but Activities may only be assigned to one such Bid Item. This Module shall be completed to the satisfaction of the Contracting Officer prior to any contract payment (except for Bonds, Insurance and/or Mobilization, as approved by the Contracting Officer) and shall be updated as required.

(1) During the course of the contract, the Contractor will receive various Quality Assurance comments from the Government that will reflect corrections needed to Contractor activities or reflect outstanding or future items needing the attention of the Contractor. The Contractor will acknowledge receipt of these comments by specific number reference on his Daily CQC Report, and will also reflect on his Daily CQC Report when these items are specifically completed or corrected to permit Government verification.

(2) The Contractor's schedule system shall include, as specific and separate activities, all Preparatory Phase Meetings (inspections); all O&M Manuals; and all Test Plans of Electrical and Mechanical Equipment or Systems that require validation testing or instructions to Government representatives.

3.11 NOTIFICATION OF NONCOMPLIANCE

The Contracting Officer will notify the Contractor of any detected noncompliance with the foregoing requirements. The Contractor shall take immediate corrective action after receipt of such notice. Such notice, when delivered to the Contractor at the work site, shall be deemed sufficient for the purpose of notification. If the Contractor fails or refuses to comply promptly, the Contracting Officer may issue an order stopping all or part of the work until satisfactory corrective action has been taken. No part of the time lost due to such stop orders shall be made the subject of claim for extension of time or for excess costs or damages by the Contractor.

3.12 CONSTRUCTION CONTROL MANUAL

In addition to the requirements specified in the various Technical Specifications hereinafter, test procedures and minimum number of tests will be performed in accordance with SPK PAM 415-1-2, "Construction Control Manual". Neither the specified minimum number of tests nor the lack of them shall in any way limit or relieve the Contractor of his responsibility to perform adequate tests to assure compliance with the quality requirements of these specifications. The referenced standards listed in this Construction Control Manual shall be of the latest issue unless otherwise specified.

The "Construction Control Manual" may be examined in the following office locations, and will be furnished to the Contractor:

Corps of Engineers
Los Angeles District
Construction Management Section
911 Wilshire Blvd.
Los Angeles, California

Corps of Engineers
High Desert Area Office
352 East Ave., K-4
Lancaster, California

-- End of Section --

INDEX

SECTION 01500

TEMPORARY CONSTRUCTION FACILITIES

PARAGRAPH

PART 1 GENERAL

1.1 APPLICABLE PUBLICATIONS

1.2 GENERAL REQUIREMENTS

1.3 PROTECTION AND MAINTENANCE OF TRAFFIC

1.4 CONTRACTOR'S TEMPORARY FACILITIES

1.5 TEMPORARY PROJECT SAFETY FENCING

1.6 HOUSEKEEPING AND CLEANUP

1.7 RESTORATION OF STORAGE AREA

PART 2 PRODUCTS (NOT APPLICABLE)

PART 3 EXECUTION (NOT APPLICABLE)

SECTION 01500

TEMPORARY CONSTRUCTION FACILITIES

PART 1 GENERAL

1.1 APPLICABLE PUBLICATIONS:

The publications listed below form a part of this specification to the extent referenced. The publications are referred to in the text by the basic designation only.

DEPARTMENT OF COMMERCE (DOC)

DOC PS 1	(1983) Construction and Industrial Plywood
DOC PS 20	(1970) American Softwood Lumber Standard.

FEDERAL SPECIFICATIONS (FS)

FS TT-E-2784	(Rev A) Enamel (Acrylic-Emulsion, Exterior)

AMERICAN NATIONAL STANDARDS INSTITUTE (ANSI)

ANSI Z535.1	(1991) Safety Color Code

AMERICAN SOCIETY FOR TESTING AND MATERIALS (ASTM)

ASTM F 547	(1977; R 1990) Definitions of Terms Relating to Nails for Use with Wood and Wood-Base Materials

U.S. ARMY CORPS OF ENGINEERS

EM 385-1-1	Safety and Health Requirements Manual (3 September 1996).

WEST COAST LUMBER INSPECTION BUREAU (WCLIB)

WCLIB 16	(1970; Rev 1983) Standard Grading and Dressing Rules for Douglas Fir, Western Hemlock, Western Red Cedar, White Fir, Sitka Spruce Lumber

WESTERN WOOD PRODUCTS ASSOCIATION (WWPA)

WWPA-01	(1991; Supple No. 1) Western Lumber Grading Rules 91

1.2 GENERAL REQUIREMENTS

1.2.1 Site Plan

The Contractor shall prepare a site plan indicating the proposed location and dimensions of any area to be fenced and used by the Contractor, the number of trailers to be used, avenues of ingress/egress to the fenced area and details of the fence installation. Any areas which may have to be graveled to prevent the tracking of mud shall also be identified. The Contractor shall also indicate if the use of a supplemental or other staging area is desired.

1.2.2 Identification of Employees

The Contractor shall be responsible for furnishing to each employee and for requiring each employee engaged on the work to display identification as approved and directed by the Contracting Officer. Prescribed identification shall immediately be delivered to the Contracting Officer for cancellation upon release of any employee. When required, the Contractor shall obtain and provide fingerprints of persons employed on the project. Contractor and subcontractor personnel shall wear identifying markings on hard hats clearly identifying the company for whom the employee works.

1.2.3 Employee Parking

Contractor employees shall park privately owned vehicles in an area designated by the Contracting Officer. This area will be within reasonable walking distance of the construction site. Contractor employee parking shall not interfere with existing and established parking requirements of the military installation.

1.2.4 Project and Safety Signs

(A) General:

The Contractor shall construct and erect one safety sign and a minimum of 1 hard hat signs at locations designated by the Contracting Officer. The signs shall conform to the requirements of the drawing attached at the end of this section. The signs shall be erected as soon as possible and within 15 days after date of commencement of work under this contract. The hat decal called for on the signs will be furnished by the Government.

(B) Maintenance and Disposal:

The Contractor shall maintain the signs in good condition throughout the life of the project. Signs shall remain the property of the Contractor and upon completion of the project they shall be removed from the site.

1.3 PROTECTION AND MAINTENANCE OF TRAFFIC

During construction the Contractor shall provide access and temporary relocated roads as necessary to maintain traffic. The Contractor shall maintain and protect traffic on all affected roads during the construction period except as otherwise specifically directed by the Contracting Officer. Measures for the protection and diversion of traffic, including the provision of watchmen and flagmen, erection of barricades, placing of lights around and in front of equipment and the work, and the erection and maintenance of adequate warning, danger, and direction signs, shall be as required by the State and local authorities having jurisdiction. The traveling public shall be protected from damage to person and property. The Contractor's traffic on roads selected for hauling material to and from the site shall interfere as little as possible with public traffic. The Contractor shall investigate the adequacy of existing roads and the allowable load limit on these roads. The Contractor shall be responsible for the repair of any damage to roads caused by construction operations.

1.3.1 Haul Roads

The Contractor shall, at its own expense, construct access and haul roads necessary for proper prosecution of the work under this contract. Haul roads shall be constructed with suitable grades and widths; sharp curves, blind corners, and dangerous cross traffic shall be avoided. The Contractor shall provide necessary lighting, signs, barricades, and distinctive markings for the safe movement of traffic. The method of dust control, although optional, shall be adequate to ensure safe operation at all times. Location, grade, width, and alignment of construction and hauling roads shall be subject to approval by the Contracting Officer. Lighting shall be adequate to assure full and clear visibility for full width of haul road and work areas during any night work operations. Upon completion of the work, haul roads designated by the Contracting Officer shall be removed.

1.3.2 Barricades

The Contractor shall erect and maintain temporary barricades to limit public access to hazardous areas. Such barricades shall be required whenever safe public access to paved areas such as roads, parking areas or sidewalks is prevented by construction activities or as otherwise necessary to ensure the safety of both pedestrian and vehicular traffic. Barricades shall be securely placed, clearly visible with adequate illumination to provide sufficient visual warning of the hazard during both day and night.

1.4 CONTRACTOR'S TEMPORARY FACILITIES

1.4.1 Administrative Field Offices

The Contractor shall provide and maintain administrative field office facilities within the construction area at the designated site. Government office and warehouse facilities will not be available to the Contractor's personnel.

1.4.2 Storage Area

The Contractor shall construct a temporary 1.8 meter (6 foot) high chain link fence around trailers and materials. Fence posts may be driven, in lieu of concrete bases, where soil conditions permit. Trailers, materials, or equipment shall not be placed or stored outside the fenced area unless such trailers, materials, or equipment are assigned a separate and distinct storage area by the Contracting Officer away from the vicinity of the construction site but within the military boundaries. Trailers, equipment, or materials shall not be open to public view with the exception of those items which are in support of ongoing work on any given day. Materials shall not be stockpiled outside the fence in preparation for the next day's work. At the end of each work day mobile equipment, such as tractors, wheeled lifting equipment, cranes, trucks, and like equipment, shall be parked within the fenced area.

1.4.3 Supplemental Storage Area

Upon Contractor's request, the Contracting Officer will designate another or supplemental area for the Contractor's use and storage of trailers, equipment, and materials. This area may not be in close proximity of the construction site but shall be within the military boundaries. Fencing of materials or equipment will not be required at this site; however, the Contractor shall be responsible for cleanliness and orderliness of the area used and for the security of any material or equipment stored in this area. Utilities will not be provided to this area by the Government.

1.4.4 Appearance of Trailers

Trailers utilized by the Contractor for administrative or material storage purposes shall present a clean and neat exterior appearance and shall be in a state of good repair. Trailers which, in the opinion of the Contracting Officer, require exterior painting or maintenance will not be allowed on the military property.

1.4.5 Maintenance of Storage Area

Fencing shall be kept in a state of good repair and proper alignment. Should the Contractor elect to traverse with construction equipment or other vehicles grassed or unpaved areas which are not established roadways, such areas shall be covered with a layer of gravel as necessary to prevent rutting and the tracking of mud onto paved or established roadways; gravel gradation shall be at the Contractor's discretion. Grass located within the boundaries of the construction site shall be mowed for the duration of the project. Grass and vegetation along fences, buildings, under trailers, and in areas not accessible to mowers shall be edged or trimmed neatly.

1.4.6 Security Provisions

Adequate outside security lighting shall be provided at the Contractor's temporary facilities. The Contractor shall be responsible for the security of its own equipment; in addition, the Contractor shall notify the appropriate law enforcement agency requesting periodic security checks of the temporary

1.5 TEMPORARY PROJECT SAFETY FENCING

As soon as practicable, but not later than 15 days after the date established for commencement of work, the Contractor shall furnish and erect temporary project safety fencing at the work site. The safety fencing shall be a high visibility orange colored, high density polyethylene grid or approved equal, a minimum of 1.07 meters (42 inches) high, supported and tightly secured to steel posts located on maximum 3 meters (10 foot) centers, constructed at the approved location. The safety fencing shall be maintained by the Contractor during the life of the contract and, upon completion and acceptance of the work, shall become the property of the Contractor and shall be removed from the work site.

1.6 HOUSEKEEPING AND CLEANUP:

Pursuant to the requirements of paragraph, CLEANING UP, and paragraph, ACCIDENT PREVENTION, of the CONTRACT CLAUSES, Section 00700, the Contractor shall assign sufficient personnel to insure strict compliance. The Contractor shall keep the total construction area, structures and accessways free of debris and obstructions at all times. Work will not be allowed in those areas that have unsatisfactory cleanup and housekeeping as determined by the Government representative in charge. At least once each day all areas shall be checked by the Prime Contractor and, if necessary, corrected to comply with the above requirement. Housekeeping and cleanup shall be assigned by the Contractor to specific personnel. The name(s) of the cleanup personnel shall be available at the project site; each will be supplied with a distinctively marked hard hat, to be worn from the beginning to the end of the project.

1.7 RESTORATION OF STORAGE AREA

Upon completion of the project and after removal of trailers, materials, and equipment from within the fenced area, the fence shall be removed and will become the property of the Contractor. Areas used by the Contractor for the storage of equipment or material, or other use, shall be restored to the original or better condition. Gravel used to traverse grassed areas shall be removed and the area restored to its original condition, including top soil and seeding as necessary.

PART 2 PRODUCTS (NOT APPLICABLE)

PART 3 EXECUTION (NOT APPLICABLE)

-- End of Section --

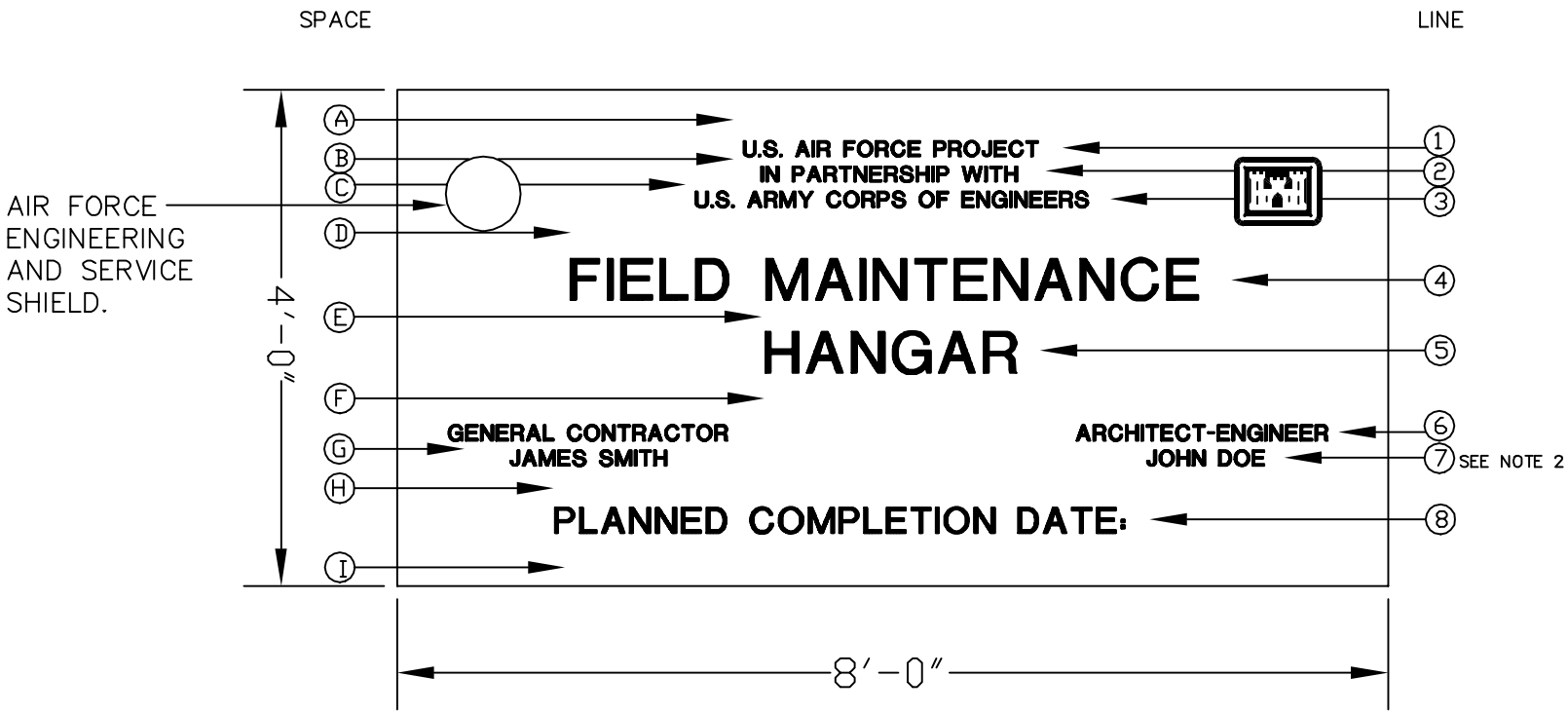

SAMPLE CONSTRUCTION SIGN

NOTES:

1. BACKGROUND AND LETTER COLORS SHELL BE AS SPECIFIED IN SECTION 01500.
2. "CORPS OF ENGINEERS" (FOR SACRAMENTO DISTRICT IN-HOUSE DESIGN PROJECTS ONLY).

SCHEDULE

SPACE	HEIGHT	LINE	DESCRIPTION	LETTER HEIGHT	STROKE
A	5"	1	U.S AIR FORCE PROJECT	1.5"	3/16"
B	1"	2	IN PARTNERSHIP WITH	1.5"	3/16"
C	1"	3	U.S. ARMY CORPS OF ENGINEERS	1.5"	3/16"
D	5"	4	PROJECT NAME	4"	1/2"
E	3"	5	PROJECT NAME (IF REQUIRED)	4"	1/2"
F	5"	6	GENERAL CONTRACTOR/A-E	1.5"	3/16"
G	1"	7	GENERAL CONTRACTOR/A-E	1.5"	3/16"
H	4"	8	PLANNED COMPLETION DATE	2.5"	1/4"
I	5"				

STANDARD DETAIL
PROJECT SIGN
U.S. AIR FORCE
U.S. ARMY ENGINEER DISTRICT
SACRAMENTO

Drawn T. Tufts — Not to Scale
Checked R. Simmons — AUGUST 1994
File. No. 150-25-1162

ACAD DRAWING: SIGN1162 DWG. 9, AUG. 94

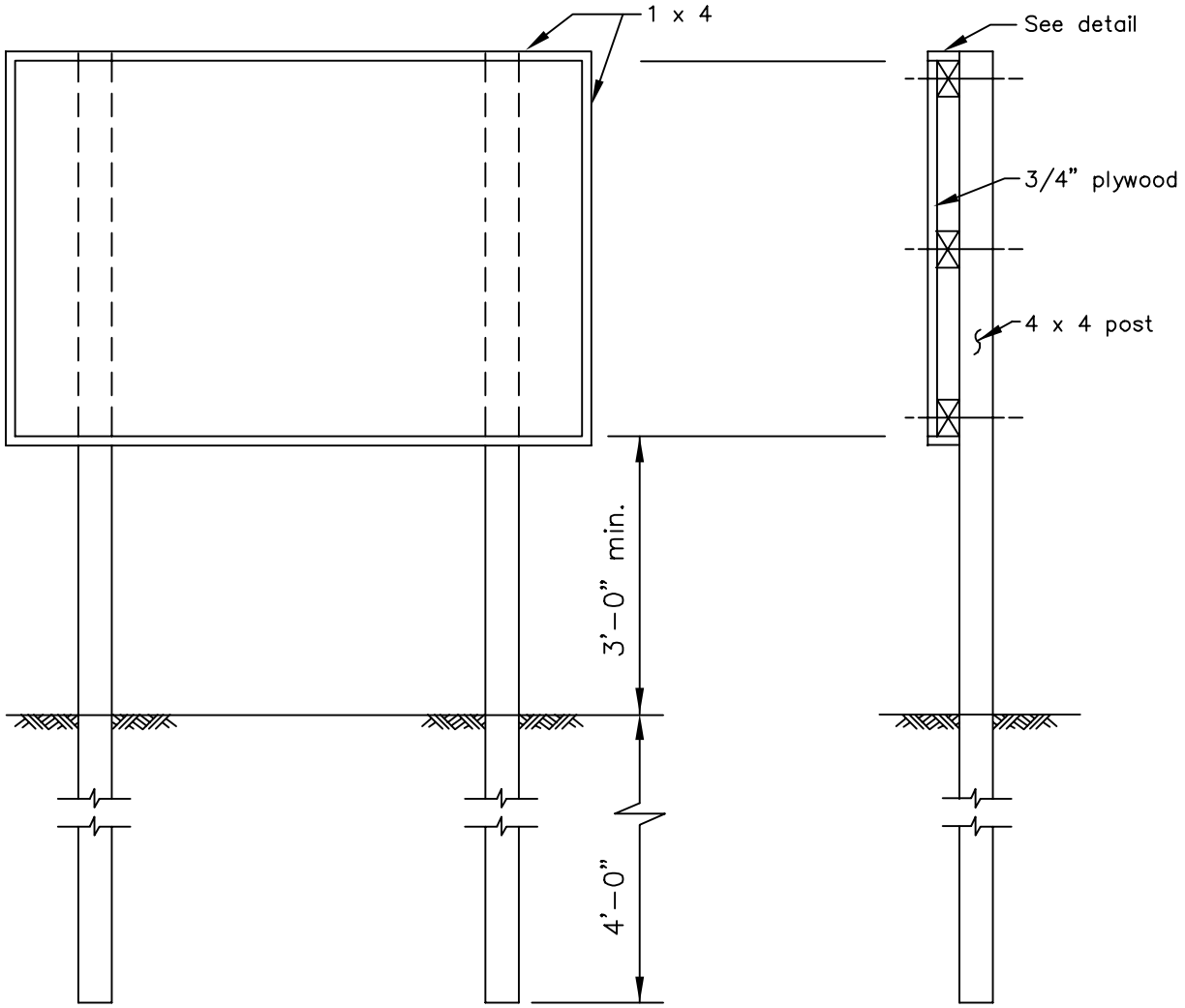

ELEVATION

SECTION

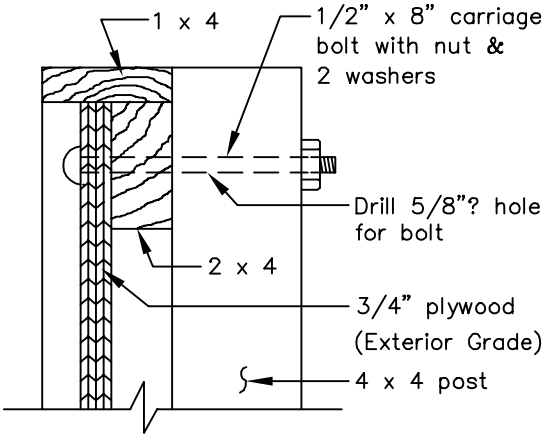

DETAIL

GENERAL NOTES:

1. Lumber to be cut & formed accurately.
2. Secure 1 x 4 and plywood with 6d finish nails at not less than 12" O.C.
3. All exposed nails to be set & holes filled with putty.
4. Sign to be set in good solid ground & backfill carefully tamped into place.
5. Where necessary posts shall be braced to provide a solid installation.
6. Paint primer (Fed. Spec. TT-P-25)
   Paint primer (Fed. Spec. TT-E-529)

STANDARD DETAIL

SIGN DETAILS

U.S. ARMY ENGINEER DISTRICT
SACRAMENTO

Drawn M.Koenig — Not to Scale
Checked R. Simmons — 1987
File No. 150-25-1232

ACAD Drawing SIGN1232.DWG 198

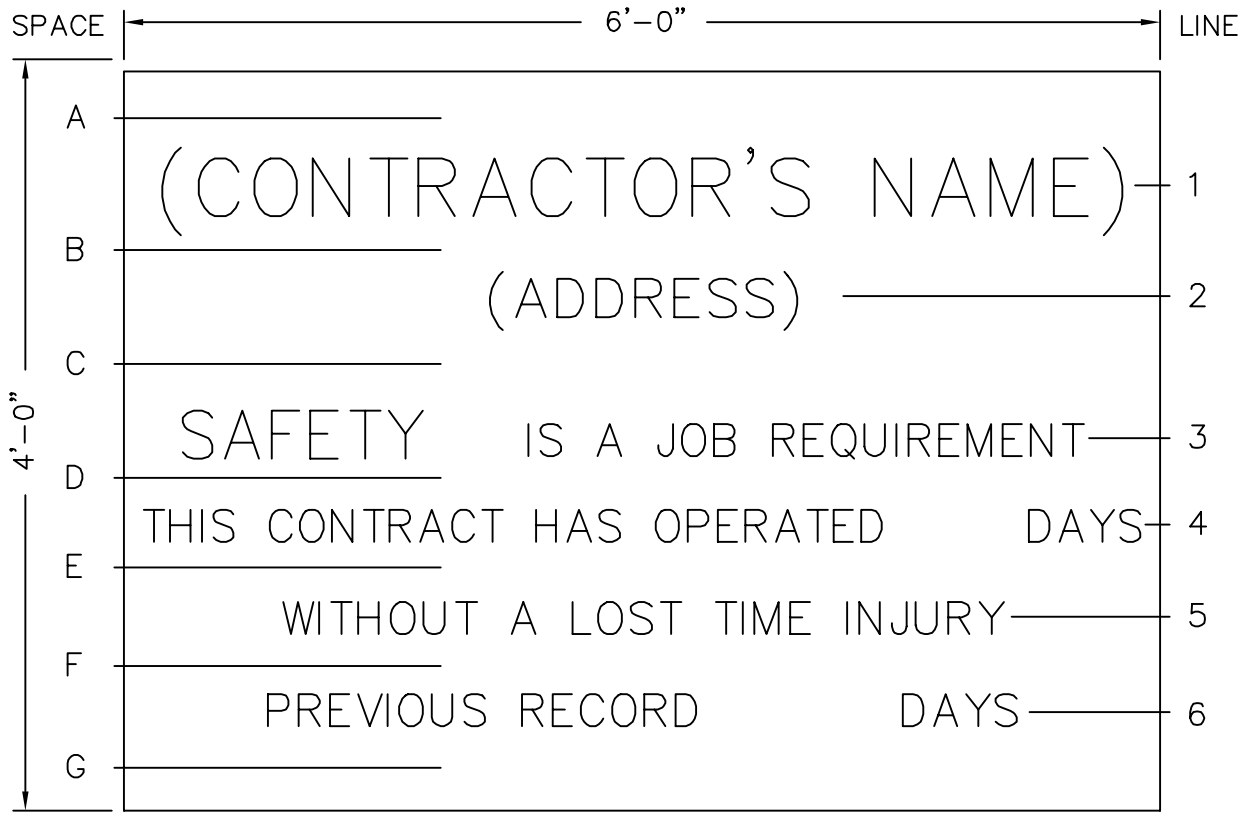

SCHEDULE

SPACE	HEIGHT	LINE	DESCRIPTION	LETTER HEIGHT
A	5"			
		1	CONTRACTOR'S NAME	5"
B	3"			
		2	ADDRESS	3"
C	6"			
		3	SAFETY IS A JOB REQUIREMENT	4 1/2" & 3"
D	3"			
		4	ALL LETTERING	3"
E	3"			
		5	ALL LETTERING	3"
F	3"			
		6	ALL LETTERING	3"
G	5"			

NOTE:

LETTERING SHALL BE BLACK No. 27038, FEDERAL STANDARD 595A.
SIGN SHALL BE INSTALLED IN THE SAME MANNER
AS THE PROJECT SIGN.

STANDARD DETAIL

SAFETY SIGN

U S ARMY ENGINEER DISTRICT
SACRAMENTO

Drawn T. Tufts Not to Scale
Checked R. Simmons AUG. 1988
File number 80-25-707

ACAD DRAWING: SIGN 707 DWG. 9, DEC. 88

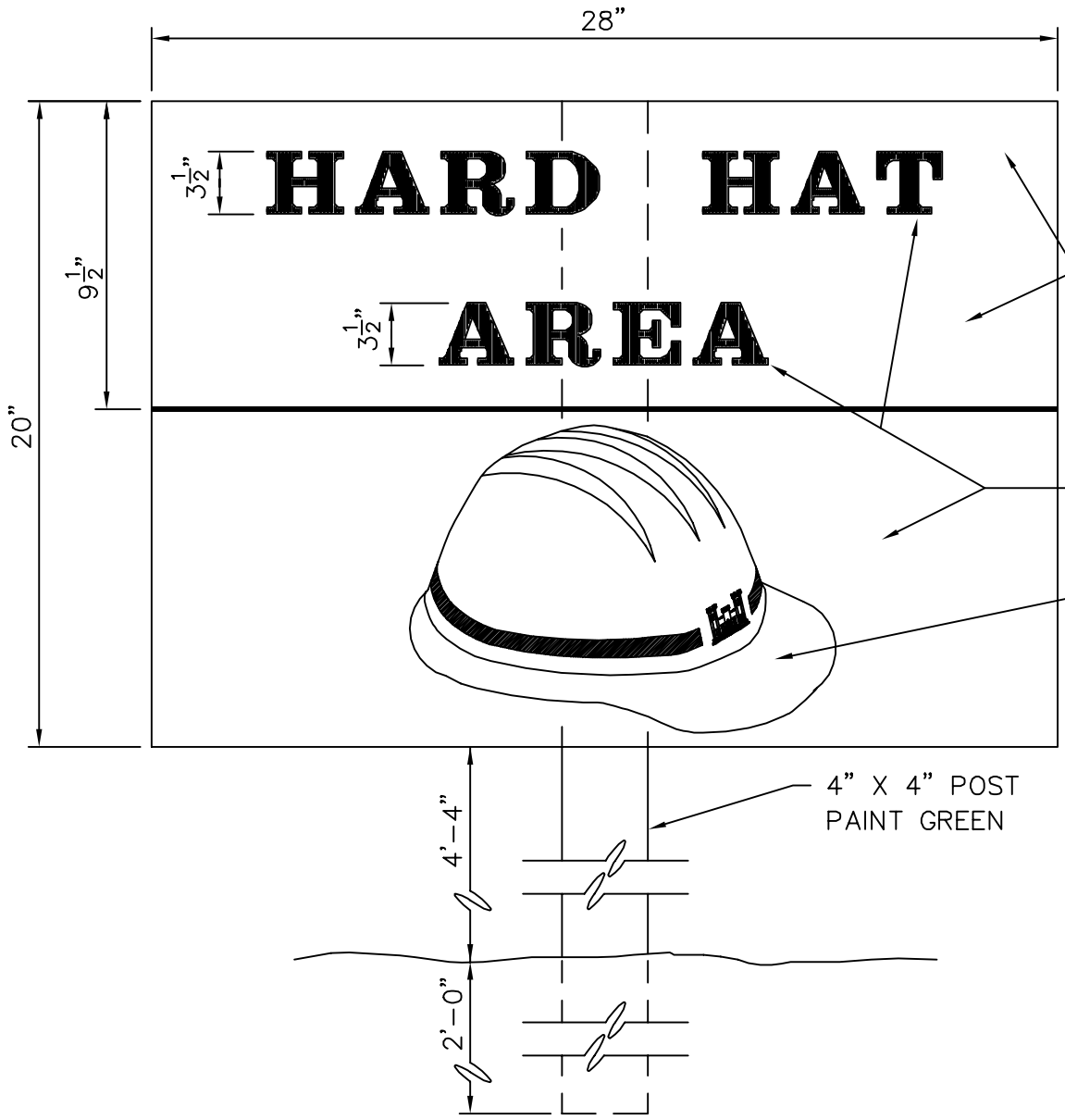

GENERAL NOTES:

1. Green & White Paint shall be opaque glossy as specified in ANSI Z535.1

2. Bolt Sign to post w/$2\frac{1}{2}$" dia. Carriage Bolts.

STANDARD DETAIL

HARD HAT SIGN

U.S. ARMY ENGINEER DISTRICT
SACRAMENTO

Drawn T. Tufts — Not to Scale
Checked R. Simmons — JAN. 1996
File No. 80-25-774

ACAD DRAWING: SIGN774 DWG. 31, JAN. 96

INDEX

SECTION 01505

GENERAL REQUIREMENTS

PARAGRAPH

PART 1 GENERAL

1.1 SCRAP MATERIAL

1.2 WRITTEN GUARANTEES AND GUARANTOR'S LOCAL REPRESENTATIVE

1.3 PRICING OF CONTRACTOR-FURNISHED AND INSTALLED PROPERTY AND GOVERNMENT-FURNISHED CONTRACTOR-INSTALLED PROPERTY

1.4 TEMPORARY ELECTRIC WIRING

1.5 UTILITIES NOT SHOWN

1.6 PLANNED UTILITY OUTAGES AND STREET CLOSURES

1.7 PERMITS

1.8 TIME EXTENSIONS FOR UNUSUALLY SEVERE WEATHER

1.9 SPECIAL CONSTRUCTION PROCEDURES

1.10 HAZARDOUS NOISE AREA

1.11 WARRANTY OF CONSTRUCTION

PART 2 PRODUCTS (NOT APPLICABLE)

PART 3 EXECUTION (NOT APPLICABLE)

SECTION 01505

GENERAL REQUIREMENTS

PART 1 GENERAL

1.1 SCRAP MATERIAL

Materials specified to be removed and become the property of the Contractor are designated as scrap, and the Contractor, by signing this contract, hereby acknowledges that he has made due allowance for value, if any, of such scrap in the contract price. See SECTION 01505, Paragraph 1.9, SPECIAL CONSTRUCTION PROCEDURES, regarding Salvage.

1.2 WRITTEN GUARANTEES AND GUARANTOR'S LOCAL REPRESENTATIVE:

Prior to completion of the contract, the Contractor shall obtain and furnish to the Contracting Officer's representative written guarantees for all the equipment and/or appliances furnished under the contract. The Contractor shall furnish with each guarantee: The name, address, and telephone number of the guarantor's representative nearest to the location where the equipment and/or appliances are installed, who, upon request of the Using Service's representative, will honor the guarantee during the guaranty period and will provide the services prescribed by the terms of the guarantee.

1.3 PRICING OF CONTRACTOR-FURNISHED AND INSTALLED PROPERTY AND GOVERNMENT-FURNISHED CONTRACTOR-INSTALLED PROPERTY:

The Contractor shall promptly furnish and shall cause any sub-contractor or supplier to furnish, in like manner, unit prices and descriptive data required by the Government for Property Record purposes of fixtures and equipment furnished and/or installed by the Contractor or sub-contractor, except prices do not need to be provided for Government-Furnished Property. This information shall be listed on RMS CQC Module furnished by the Government. See example forms at the end of this section.

1.4 TEMPORARY ELECTRIC WIRING:

(A) Temporary Power and Lighting:

The Contractor shall provide construction power facilities in accordance with the safety requirements of the National Electrical Code NFPA No. 70 and the SAFETY AND HEALTH REQUIREMENTS MANUAL EM 385-1-1. The Contractor, or his delegated subcontractor, shall enforce all the safety requirements of electrical extensions for the work of all subcontractors. All work shall be accomplished by skilled electrical tradesmen in a workmanlike manner, as approved by the Contracting Officer.

(B) Construction Equipment:

In addition to the requirements of EM 385-1-1, SAFETY AND HEALTH REQUIREMENTS MANUAL, all temporary wiring conductors installed for operation of construction tools and equipment shall be either Type TW or THW contained in metal raceways, or may be multiconductor cord. Temporary wiring shall be secured above the ground or floor in a workmanlike manner and shall not present an obstacle to persons or equipment. Open wiring may only be used outside of buildings, and then only in strict accordance with the provisions of the National Electrical Code.

(C) Circuit Protection:

In addition to the present requirements in EM 385-1-1 and the National Electrical Code, all 15 and 20-ampere receptacle outlets used for obtaining power during construction shall have ground fault circuit interrupters (GFCI) for personnel protection. Block and brick saws shall also be equipped with GFCI. The Contracting Officer may allow an exception to this requirement for circuits for concrete vibrators or circuits operating at other than 60 Hertz normal (in both cases an assured grounding program as described in the National Electrical Code, except utilizing the daily inspection frequency of the grounding means of such equipment, may be permitted). The assured grounding program will not be permitted as a substitute for usage of GFCI'S except as described above. All generator-powered 15- and 20-ampere, 60 Hertz receptacle outlets shall have GFCI'S, and shall be properly grounded. A testing means shall be provided which will impose a measured fault of 5 milliamperes, plus or minus 1 milliamperes, and result in tripping the GFCI unit.

1.5 UTILITIES NOT SHOWN:

If the Contractor encounters, within the construction limits of the entire project, utilities not shown on the plans and not visible as to the date of this contract and such utilities will interfere with construction operations, he shall immediately notify the Contracting Officer in writing to enable a determination by the Contracting Officer as to the necessity for removal or relocation. If such utilities are removed or relocated as directed by the Contracting Officer, the Contractor shall be entitled to equitable adjustment for any additional pertinent work or delay.

(B) The Prime Contractor's superintendent

The Prime Contractor's superintendent shall take an active role in enforcing the safety requirements by participation in safety conferences, hazard analysis (see below), tool box meetings, walk-through inspections, correction of violations, etc., and including that of the subcontractor's work.

(C) Job Hazard Analysis:

Based on the construction schedule, the Contractor shall submit a job hazard analysis of each major phase of work prior to entering that phase of activity. The analysis shall include major or high risk hazards, as well as commonly recurring deficiencies that might possibly be encountered for that operation, and shall identify proposed methods and techniques of accomplishing each phase in a safe manner. The Prime Contractor's superintendent shall take active participation in the Job Hazard Analysis, including the subcontractors' work. Prior to start of actual work a meeting shall be held with Prime Contractor, Government, and affected subcontractor to review the Job Hazard Analysis. In addition, job site meetings shall be held to indoctrinate foreman and workers on details of this analysis.

(D) Fire Prevention:

Twenty-four hours notice shall be given to the Contracting Officer for coordination with the Facility Fire Department prior to conducting any fire hazardous operation. Cutting or welding will be permitted only in areas that are or have been made fire safe. Where possible, all combustibles shall be located at least 35 feet horizontally from the work site. Where such location is impracticable, combustibles shall be protected with fire blankets and/or protective welding screens to prevent slag from running out of the work area. Edges of covers at the floor shall be tight to prevent sparks from going under them. This precaution is also important at overlaps where several covers are used to protect a large pile. The Contractor shall not allow any welding/cutting or open flame operations in facilities that are protected by a wet pipe fire sprinkler or an automatic detection system, if the system is out of service. First priority of work will be to return the suppression/detection system to operational condition. Return the fire detection and/or suppression system back to an operational status (if possible) during periods that the facility is unoccupied, and at the end of the work day. The Contractor shall post a fire guard for a 24 hour period (or certify to the Fire Department that the facility is safe) after welding, cutting, and open flame operations in a facility when: (a) fire detection and suppression system can not be returned to service; (b) fire detection or suppression systems do not exist. Other fire prevention precautions shall be in accordance with the latest National Fire Codes.

(F) Recordkeeping/Reporting Requirements:

On all contract operations, the Prime Contractor shall be responsible for recording and reporting all accident exposure and experience incident work. (This includes exposure and experience of the prime contractor and his/her sub-contractor(s)). As a minimum these records shall include exposure work-hours and a log of occupational injuries and illnesses. (OSHA Form 200 or state equivalent as prescribed by 29 CFR 1904.5) Reference EM 385-1-1, 01.D.04.

(G) Accident Reporting:

In addition to the requirements for reporting accidents in accordance with EM 385-1-1, Section 1, the Prime Contractor will submit at the 50% point and 100% of project completion, a written summary of worker's compensation claims filed by workers on the project. The report will include all subcontractors. The main report covering the Prime Contractor claims will be certified as "correct and true" by the Contractor's compensation insurance carrier. The same certification will be required for subcontractor reports.

1.6 PLANNED UTILITY OUTAGES AND STREET CLOSURES:

All utility outages and street closures shall occur on the weekends and be of as short a duration as possible and shall be scheduled as far in advance as possible with the Contracting Officer, in no case less than (10) days before the outage or closure. The Contractor shall obtain in writing from the Contracting Officer a statement or schedule giving the permissible times of outages or closures for particular installations and the maximum time allowed for each. The Contractor shall strictly observe such schedules and will be held responsible for any violations.

(A) Street Closure:

The Contractor shall obtain approval in writing from the Contracting Officer before he can close any street or parking lot access. The request for closure shall be submitted in writing to the Contracting Officer 7 working days prior to planned closing and shall include the section to be closed and length of time of closure.

1.7 PERMITS:

(A) Excavation Permit:

The Contractor will be required to obtain an excavation permit on AF Form 103 from the Base Civil Engineer prior to performing any required excavation under this contract. The form shall be accompanied by a sketch showing size, depth, location, and extent of all excavation and trenching included in the contract. The completed form shall be submitted to the Base Civil Engineer with a copy to the Resident Engineer at least 10 working days prior to intended date of excavation. During the 10-day period the Base Civil Engineer and Base Communications Officer will make known to the Contractor by drawings, staking, or both, the location of all known buried utilities and communication lines. In these identified areas, only hand excavation will be permitted.

(B) Authority to Construct Permit

The new generators must qualify for a mandatory Autority to Construct Permit. Prior to purchasing the generators, Air Quality and Compliance shall be consulted in order to confirm that the new generators qualify for a mandatory Authority to Construct (ATC) Permit. Contact the Engineering and Technical Support Services (ETSS) contractor Computer Sciences Corporation (CSC) at (661) 277-6241/1467 for further information.

1.8 TIME EXTENSIONS FOR UNUSUALLY SEVERE WEATHER:

(A) This provision specifies the procedure for the determination of time extensions for unusually severe weather in accordance with the CONTRACT CLAUSE, Section 00700, entitled "DEFAULT (FIXED-PRICE CONSTRUCTION)". In order for the Contracting Officer to award a time extension under this clause, the following conditions must be satisfied:

(1) The weather experienced at the project site during the contract period must be found to be unusually severe, that is, more severe than the adverse weather anticipated for the project location during any given month.

(2) The unusually severe weather must actually cause a delay to the completion of the project. The delay must be beyond the control and without the fault or negligence of the Contractor.

(B) The following schedule of monthly anticipated adverse weather delays is based on National Oceanic and Atmospheric Administration (NOAA) or similar data for the project location and will constitute the base line for monthly weather time evaluations. The Contractor's progress schedule must reflect these anticipated adverse weather delays in all weather dependent activities. Adverse weather days were determined based on the following four elements:

Precipitation greater than or equal to .10 inch.
Minimum temperature less than or equal to 32 degrees F.
Maximum temperature greater than or equal to 100 degrees F.
Surface wind greater than or equal to 20 MPH.

MONTHLY ANTICIPATED ADVERSE WEATHER DELAY
WORK DAYS BASED ON (5) DAY WORK WEEK

JAN	FEB	MAR	APR	MAY	JUN	JUL	AUG	SEP	OCT	NOV	DEC
(13)	(12)	(08)	(03)	(00)	(00)	(00)	(01)	(00)	(02)	(10)	(15)

(C) Upon acknowledgement of the Notice to Proceed (NTP) and continuing throughout the contract, the Contractor will record on the daily CQC report, the occurrence of adverse weather and resultant impact to normally scheduled work. Actual adverse weather delay days must prevent work on critical activities for 50 percent or more of the Contractor's scheduled work day. (ER 415-1-15, 31 OCT 89)

1.9 SPECIAL CONSTRUCTION PROCEDURES

(A) Base-wide identification of employees

The Contractor shall submit the following information on its company letterhead not less than 7 calendar days prior to the start of work on this project.

(1) Project Name
(2) Project Location
(3) Project start date
(4) Anticipated completion date
(5) Name, nationality, and social security number of each employee who will be working on this project.
(6) Registration numbers of all vehicles that will be required to enter the Base during the construction period.

(B) Use of fire hydrants

Any use of the fire hydrants will be coordinated one week in advance with the base fire department and airfield management.

(C) Cooperation with Others:

During the life of this contract, other Contractors will be performing operations in the general area where work under this contract is being performed. The Contractor shall cooperate with others in all respects wherever necessary for the better prosecution of the work. As far as practicable, all persons working in the vicinity shall have equal rights to the use of all transportation facilities and grounds within the limitations specified in the CONTRACT CLAUSES, Section 00700. The obligation of the Contractor under this contract shall include jointly planning and scheduling the work, on a cooperative basis, with other Contractors in order to minimize delays and interferences. The Contractor shall so arrange his operations as to not interfere with other work in progress. In case of dispute or disagreement regarding use of transportation and storage facilities and rights of access, the decision of the Contracting Officer shall govern.

(D) Landfills and Disposal Verification:

Prior to conclusion of the contract, receipt and approval of the Contractor's disposal submittal must be accomplished. For off-base disposal of demolition debris and hazardous waste the Contractor shall, as a minimum, submit the following to the Environmental Management Office, AFFTC/EM:

(1) Name and address of the proposed landfill to be used for disposal of construction project demolition waste

(2) Landfill class

(3) Material list with quantities to be disposed at the proposed landfill.

(E) Contractor shall coordinate the Staging Area with the Contracting Officer.

(F) Contractor shall be allowed to core drill the concrete walls of the TRACON. Any noise that will cause excessive noise on the Air Traffic Control Room floor will not be allowed during normal working hours. Any noise generation operation will have to be scheduled, on a case by case basis, in the early morning hours; and will then be limited to a four hour operation. All operations which will generate excessive noise shall be approved by the Air Traffic Manager.

1.10 HAZARDOUS NOISE AREA

Work area for this contract is located within a high noise area and can be hazardous to the human ear. The Contractor is responsible for providing adequate ear protection as may be required for Contractor's personnel at the job site.

1.11 WARRANTY OF CONSTRUCTION

(a). Performance Bond.

(1). It is understood that the Contractor's Performance Bond will remain effective throughout the life of all warranties and warranty extensions.

(2). In the event the Contractor or his designated representative fails to commence and diligently pursue any work required under the Warranty of Construction Section of the Technical Provisions within a reasonable time after receipt of written notification pursuant to the requirements thereof, the Contracting Officer shall have a right to demand that said work be performed under the Performance Bond by making written notice on the surety. If the surety fails or refuses to perform the obligation it assumed under the Performance Bond, the Contracting Officer shall have the work performed by others, and after completion of the work, shall make demand for reimbursement of any or all expenses incurred by the Government while performing the work, including, but not limited to administrative expenses.

(3). Warranty repair work which arises to threaten the health or safety of personnel, the physical safety of property or equipment, or which impairs operations, habitability of living spaces, etc., will be handled by the Contractor on an immediate basis as directed verbally by the Contracting Officer or his authorized representative. Written verification will follow verbal instructions. Failure of the Contractor to respond as verbally directed will be cause for the Contracting Officer or his authorized representative to have the warranty repair work performed by others and to proceed against the Contractor as outlined in the paragraph b. above.

(b). Pre-Warranty Conference. Prior to contract completion and at a time designated by the Contracting Officer or his authorized representative, the Contractor shall meet with the Contracting Officer to develop a mutual understanding with respect to the requirements of SECTION 00700, Paragraph, WARRANTY OF CONSTRUCTION, of this specification. Communication procedures for Contractor notification of warranty defects, priorities with respect to the type of defect, reasonable time required for Contractor response, and other details deemed necessary by the Contracting Officer or his authorized representative for the execution of the construction warranty shall be established/reviewed at this meeting.

In connection with these requirements and at the time of the Contractor's quality control completion inspection, the Contractor will furnish the name, telephone number and address of a licensed and bonded company which is authorized to initiate and pursue warranty work action on behalf of the Contractor. This single point of contact will be located within the local service area of the warranted construction, will be continuously available, and will be responsive to Government inquiry on warranty work action and status. This requirement does not relieve the Contractor of any of his responsibilities in connection with Section 00700, Paragraph, WARRANTY OF CONSTRUCTION.

(c). Equipment Warranty Identification Tags. The Contractor shall provide warranty identification tags on all equipment installed under this contract.

(d). Contractor's Response to Warranty Service Requirements. The following warranty service requirements are applicable to this contract. Following notification by the Contracting Officer or the Contracting Officer's Representative the Contractor shall respond to a warranty service requirement identified by the Contracting Officer's Representative in accordance with the "Warranty Service Priority List" of this program. This list prioritizes warranty work into the categories:

First Priority 1A Perform on site inspection to evaluate situation, determine course of action, initiate work within 24 hours and work continuously to completion or relief.

Second Priority 1B Perform on site inspection to evaluate situation, determine course of action, initiate work within 48 hours and work continuously to completion of relief.

Third Priority All other work to be initiated within 5 work days and work continuously to completion or relief.

The "Warranty Service Priority List" shall be compiled by the Contractor and approved by the Contracting Officer.

Should parts be required to complete the work and the parts are not immediately available the Contractor shall have a maximum of 12 hours after arrival at the job site to provide the Contracting Officer's Representative with firm written proposals for emergency alternatives and temporary repairs for Government participation with the Contractor to provide emergency relief until the required parts are available on site for the Contractor to perform permanent warranty repair. The Contractors proposals shall include a firm date and time that the required parts shall be available on site to complete the permanent warranty repair. The Contracting Officer's Representative will evaluate the proposed alternatives and negotiate the alternative considered to be in the best interest of the Government to reduce the impact of the emergency condition. Alternatives considered by the Contracting Officer's Representative will include the alternative for the Contractor to "Do Nothing" while waiting until the required parts are available to perform permanent warranty repair. Negotiating a proposal which will require Government participation and the expenditure of Government funds shall constitute a separate procurement action by the using service.

PART 2 PRODUCTS (NOT APPLICABLE)

PART 3 EXECUTION (NOT APPLICABLE)

-- End of Section --

SECTION TABLE OF CONTENTS

DIVISION 01 - GENERAL REQUIREMENTS

SECTION 01780A

CLOSEOUT SUBMITTALS

PART 1 GENERAL

1.1 SUBMITTALS
1.2 PROJECT RECORD DOCUMENTS
1.2.1 As-Built Drawings
1.2.1.1 Government Furnished Materials
1.2.1.2 Working As-Built and Final As-Built Drawings
1.2.1.3 Drawing Preparation
1.2.1.4 Computer Aided Design and Drafting (CADD) Drawings
1.2.1.5 Manually Prepared Drawings
1.2.1.6 Payment
1.2.2 As-Built Record of Equipment and Materials
1.2.3 Final Approved Shop Drawings
1.2.4 Construction Contract Specifications
1.2.5 Real Property Equipment
1.3 WARRANTY MANAGEMENT
1.3.1 Warranty Management Plan
1.3.2 Performance Bond
1.3.3 Pre-Warranty Conference
1.3.4 Contractor's Response to Construction Warranty Service Requirements
1.3.5 Warranty Tags
1.4 MECHANICAL TESTING, ADJUSTING, BALANCING, AND COMMISSIONING
1.5 OPERATION AND MAINTENANCE MANUALS
1.6 FINAL CLEANING

PART 2 PRODUCTS (NOT USED)

PART 3 EXECUTION (NOT USED)

-- End of Section Table of Contents --

SECTION 01780A

CLOSEOUT SUBMITTALS

PART 1 GENERAL

1.1 SUBMITTALS

Government approval is required for submittals with a "G" designation; submittals not having a "G" designation are for information only. When used, a designation following the "G" designation identifies the office that will review the submittal for the Government. The following shall be submitted in accordance with Section 01330 SUBMITTAL PROCEDURES:

SD-02 Shop Drawings

As-Built Drawings; FIO

Drawings showing final as-built conditions of the project. [The final CADD as-built drawings shall consist of one set of electronic CADD drawing files in the specified format, one set of mylar drawings, 2 sets of blue-line prints of the mylars, and one set of the approved working as-built drawings.] [The manually prepared drawings shall consist of 1 set of completed final as-built original transparency drawings, 2 sets of blue-line prints of the transparencies, and the approved marked working as-built prints.]

SD-03 Product Data

As-Built Record of Equipment and Materials; FO

Two copies of the record listing the as-built materials and equipment incorporated into the construction of the project.

Warranty Management Plan; FIO

One set of the warranty management plan containing information relevant to the warranty of materials and equipment incorporated into the construction project, including the starting date of warranty of construction. The Contractor shall furnish with each warranty the name, address, and telephone number of each of the guarantor's representatives nearest to the project location.

Warranty Tags; FIO

Two record copies of the warranty tags showing the layout and design.

Final Cleaning; FIO

Two copies of the listing of completed final clean-up items.

1.2 PROJECT RECORD DOCUMENTS

1.2.1 As-Built Drawings

This paragraph covers as-built drawings complete, as a requirement of the contract. The terms "drawings," "contract drawings," "drawing files," "working as-built drawings" and "final as-built drawings" refer to contract drawings which are revised to be used for final as-built drawings.

1.2.1.1 Government Furnished Materials

One set of electronic CADD files in the specified software and format revised to reflect all bid amendments will be provided by the Government at the preconstruction conference for projects requiring CADD file as-built drawings.

1.2.1.2 Working As-Built and Final As-Built Drawings

The Contractor shall revise 2 sets of paper drawings by red-line process to show the as-built conditions during the prosecution of the project. These working as-built marked drawings shall be kept current on a weekly basis and at least one set shall be available on the jobsite at all times. Changes from the contract plans which are made in the work or additional information which might be uncovered in the course of construction shall be accurately and neatly recorded as they occur by means of details and notes. Final as-built drawings shall be prepared after the completion of each definable feature of work as listed in the Contractor Quality Control Plan (Foundations, Utilities, Structural Steel, etc., as appropriate for the project). The working as-built marked prints and final as-built drawings will be jointly reviewed for accuracy and completeness by the Contracting Officer and the Contractor prior to submission of each monthly pay estimate. If the Contractor fails to maintain the working and final as-built drawings as specified herein, the Contracting Officer will deduct from the monthly progress payment an amount representing the estimated cost of maintaining the as-built drawings. This monthly deduction will continue until an agreement can be reached between the Contracting Officer and the Contractor regarding the accuracy and completeness of updated drawings. The working and final as-built drawings shall show, but shall not be limited to, the following information:

a. The actual location, kinds and sizes of all sub-surface utility lines. In order that the location of these lines and appurtenances may be determined in the event the surface openings or indicators become covered over or obscured, the as-built drawings shall show, by offset dimensions to two permanently fixed surface features, the end of each run including each change in direction. Valves, splice boxes and similar appurtenances shall be located by dimensioning along the utility run from a reference point. The average depth below the surface of each run shall also be recorded.

b. The location and dimensions of any changes within the building structure.

c. Correct grade, elevations, cross section, or alignment of roads, earthwork, structures or utilities if any changes were made from contract plans.

d. Changes in details of design or additional information obtained from working drawings specified to be prepared and/or furnished by the Contractor; including but not limited to fabrication, erection, installation plans and placing details, pipe sizes, insulation material,

dimensions of equipment foundations, etc.

e. The topography, invert elevations and grades of drainage installed or affected as part of the project construction.

f. Changes or modifications which result from the final inspection.

g. Where contract drawings or specifications present options, only the option selected for construction shall be shown on the final as-built prints.

h. If borrow material for this project is from sources on Government property, or if Government property is used as a spoil area, the Contractor shall furnish a contour map of the final borrow pit/spoil area elevations.

i. Systems designed or enhanced by the Contractor, such as HVAC controls, fire alarm, fire sprinkler, and irrigation systems.

j. Modifications (change order price shall include the Contractor's cost to change working and final as-built drawings to reflect modifications) and compliance with the following procedures.

(1) Directions in the modification for posting descriptive changes shall be followed.

(2) A Modification Circle shall be placed at the location of each deletion.

(3) For new details or sections which are added to a drawing, a Modification Circle shall be placed by the detail or section title.

(4) For minor changes, a Modification Circle shall be placed by the area changed on the drawing (each location).

(5) For major changes to a drawing, a Modification Circle shall be placed by the title of the affected plan, section, or detail at each location.

(6) For changes to schedules or drawings, a Modification Circle shall be placed either by the schedule heading or by the change in the schedule.

(7) The Modification Circle size shall be 1/2 inch diameter unless the area where the circle is to be placed is crowded. Smaller size circle shall be used for crowded areas.

1.2.1.3 Drawing Preparation

The as-built drawings shall be modified as may be necessary to correctly show the features of the project as it has been constructed by bringing the contract set into agreement with approved working as-built prints, and adding such additional drawings as may be necessary. These working as-built marked prints shall be neat, legible and accurate. These drawings are part of the permanent records of this project and shall be returned to the Contracting Officer after approval by the Government. Any drawings damaged or lost by the Contractor shall be satisfactorily replaced by the Contractor at no expense to the Government.

1.2.1.4 Computer Aided Design and Drafting (CADD) Drawings

Only personnel proficient in the preparation of CADD drawings shall be employed to modify the contract drawings or prepare additional new drawings. Additions and corrections to the contract drawings shall be equal in quality and detail to that of the originals. Line colors, line weights, lettering, layering conventions, and symbols shall be the same as the original line colors, line weights, lettering, layering conventions, and symbols. If additional drawings are required, they shall be prepared using the specified electronic file format applying the same graphic standards specified for original drawings. The title block and drawing border to be used for any new final as-built drawings shall be identical to that used on the contract drawings. Additions and corrections to the contract drawings shall be accomplished using CADD files. The electronic files will be supplied on compact disc, read-only memory (CD-ROM). The Contractor shall be responsible for providing all program files and hardware necessary to prepare final as-built drawings. The Contracting Officer will review final as-built drawings for accuracy and the Contractor shall make required corrections, changes, additions, and deletions.

a. CADD colors shall be the "base" colors of red, green, and blue. Color code for changes shall be as follows:

(1) Deletions (red) - Deleted graphic items (lines) shall be colored red with red lettering in notes and leaders.

(2) Additions (Green) - Added items shall be drawn in green with green lettering in notes and leaders.

(3) Special (Blue) - Items requiring special information, coordination, or special detailing or detailing notes shall be in blue.

b. The Contract Drawing files shall be renamed in a manner related to the contract number (i.e., 98-C-10.DGN) as instructed in the Pre-Construction conference. Marked-up changes shall be made only to those renamed files. All changes shall be made on the layer/level as the original item. There shall be no deletions of existing lines; existing lines shall be over struck in red. Additions shall be in green with line weights the same as the drawing. Special notes shall be in blue on layer #63.

c. When final revisions have been completed, the cover sheet drawing shall show the wording "RECORD DRAWING AS-BUILT" followed by the name of the Contractor in letters at least 3/16 inch high. All other contract drawings shall be marked either "AS-Built" drawing denoting no revisions on the sheet or "Revised As-Built" denoting one or more revisions. Original contract drawings shall be dated in the revision block.

d. Within 20 days for contracts $5 million and above after Government approval of all of the working as-built drawings for a phase of work, the Contractor shall prepare the final CADD as-built drawings for that phase of work and submit two sets of blue-lined prints of these drawings for Government review and approval. The Government will promptly return one set of prints annotated with any necessary corrections. Within 10 days for contracts $5 million and above the Contractor shall revise the CADD files accordingly at no additional cost and submit one set of final prints for the completed phase of work to the Government. Within 20 days for contracts $5 million and above of substantial completion of all phases of work, the Contractor shall submit the final as-built drawing package for

the entire project. The submittal shall consist of one set of electronic files on compact disc, read-only memory (CD-ROM), one set of mylars, two sets of blue-line prints and one set of the approved working as-built drawings. They shall be complete in all details and identical in form and function to the contract drawing files supplied by the Government. Any transactions or adjustments necessary to accomplish this is the responsibility of the Contractor. The Government reserves the right to reject any drawing files it deems incompatible with the customer's CADD system. Paper prints, drawing files and storage media submitted will become the property of the Government upon final approval. Failure to submit final as-built drawing files and marked prints as specified shall be cause for withholding any payment due the Contractor under this contract. Approval and acceptance of final as-built drawings shall be accomplished before final payment is made to the Contractor.

1.2.1.5 Manually Prepared Drawings

Only personnel proficient in the preparation of manually prepared drawings shall be employed to modify the original contract drawing or prepare additional new drawings. Additions and corrections to the contract drawings shall be neat, clean and legible, shall be done to the same level of detail, and shall match the adjacent existing line work, and lettering being annotated in type, density, size and style. Drafting work shall be done using the same medium (pencil, plastic lead or ink) that was employed on the original contract drawings and with graphite lead on paper base material. The Contracting Officer will review as-built drawings for accuracy and conformance to the above specified drafting standards. Corrections, changes, additions, and deletions required shall meet these standards. The title block to be used for any new as-built drawings shall be similar to that used on the original drawings.

a. When final revisions have been completed, each drawing shall be lettered or stamped with the words "RECORD DRAWING AS-BUILT" followed by the name of the Contractor in letters at least 3/16 inch high. Original contract drawings shall be marked either "As-Built" drawings denoting no revisions on the sheet or "Revised As-Built" denoting one or more revisions All original contract drawings shall be dated in the revision block.

b. Within 20 days for contracts $5 million and above after Government approval of all of the working as-built drawings for a phase of work, the Contractor shall prepare the final as-built drawings for that phase of work and submit two sets of blue-line prints of these drawings for Government review and approval. The Government will promptly return one set of prints annotated with any necessary corrections. Within 10 days for contracts $5 million and above the Contractor shall revise the drawings accordingly at no additional cost and submit one set of final prints for the completed phase of work to the Government. Within 20 days for contracts $5 million and above of substantial completion of all phases of work, the Contractor shall submit the final as-built drawing package for the entire project. The submittal shall consist of the completed final as-built drawings, two blue-line prints of these drawings and the return of the approved marked as-built prints. The drawings shall be complete in all details. Paper prints and reproducible drawings will become the property of the Government upon final approval. Failure to submit final as-built drawings and marked prints, as required herein, will be cause for withholding any payment due the Contractor under this contract. Approval and acceptance of final as-built drawings shall be accomplished before final payment is made to the Contractor.

1.2.1.6 Payment

No separate payment will be made for as-built drawings required under this contract, and all costs accrued in connection with such drawings shall be considered a subsidiary obligation of the Contractor.

1.2.2 As-Built Record of Equipment and Materials

The Contractor shall furnish one copy of preliminary record of equipment and materials used on the project 15 days prior to final inspection. This preliminary submittal will be reviewed and returned 2 days after final inspection with Government comments. Two sets of final record of equipment and materials shall be submitted 10 days after final inspection. The designations shall be keyed to the related area depicted on the contract drawings. The record shall list the following data:

RECORD OF DESIGNATED EQUIPMENT AND MATERIALS DATA

Description	Specification Section	Manufacturer and Catalog, Model, and Serial Number	Composition and Size	Where Used

1.2.3 Final Approved Shop Drawings

The Contractor shall furnish final approved project shop drawings 30 days after transfer of the completed facility.

1.2.4 Construction Contract Specifications

The Contractor shall furnish final as-built construction contract specifications, including modifications thereto, 30 days after transfer of the completed facility.

1.2.5 Real Property Equipment

The Contractor shall furnish a list of installed equipment furnished under this contract. The list shall include all information usually listed on manufacturer's name plate. The "EQUIPMENT-IN-PLACE LIST" shall include, as applicable, the following for each piece of equipment installed: description of item, location (by room number), model number, serial number, capacity, name and address of manufacturer, name and address of equipment supplier, condition, spare parts list, manufacturer's catalog, and warranty. A draft list shall be furnished at time of transfer. The final list shall be furnished 30 days after transfer of the completed facility.

1.3 WARRANTY MANAGEMENT

1.3.1 Warranty Management Plan

The Contractor shall develop a warranty management plan which shall contain information relevant to the clause Warranty of Construction in Speciications. At least 30 days before the planned pre-warranty conference, the Contractor shall submit the warranty management plan for Government approval. The warranty management plan shall include all required actions and documents to assure that the Government receives all warranties to which it is entitled. The plan shall be in narrative form and contain sufficient detail to render it suitable for use by future

maintenance and repair personnel, whether tradesmen, or of engineering background, not necessarily familiar with this contract. The term "status" as indicated below shall include due date and whether item has been submitted or was accomplished. Warranty information made available during the construction phase shall be submitted to the Contracting Officer for approval prior to each monthly pay estimate. Approved information shall be assembled in a binder and shall be turned over to the Government upon acceptance of the work. The construction warranty period shall begin on the date of project acceptance and shall continue for the full product warranty period. A joint 4 month and 9 month warranty inspection shall be conducted, measured from time of acceptance, by the Contractor, Contracting Officer and the Customer Representative. Information contained in the warranty management plan shall include, but shall not be limited to, the following:

a. Roles and responsibilities of all personnel associated with the warranty process, including points of contact and telephone numbers within the organizations of the Contractors, subcontractors, manufacturers or suppliers involved.

b. Listing and status of delivery of all Certificates of Warranty for extended warranty items, to include roofs, HVAC balancing, pumps, motors, transformers, and for all commissioned systems such as fire protection and alarm systems, sprinkler systems, lightning protection systems, etc.

c. A list for each warranted equipment, item, feature of construction or system indicating:

1. Name of item.
2. Model and serial numbers.
3. Location where installed.
4. Name and phone numbers of manufacturers or suppliers.
5. Names, addresses and telephone numbers of sources of spare parts.
6. Warranties and terms of warranty. This shall include one-year overall warranty of construction. Items which have extended warranties shall be indicated with separate warranty expiration dates.
7. Cross-reference to warranty certificates as applicable.
8. Starting point and duration of warranty period.
9. Summary of maintenance procedures required to continue the warranty in force.
10. Cross-reference to specific pertinent Operation and Maintenance manuals.
11. Organization, names and phone numbers of persons to call for warranty service.
12. Typical response time and repair time expected for various warranted equipment.

d. The Contractor's plans for attendance at the 4 and 9 month post-construction warranty inspections conducted by the Government.

e. Procedure and status of tagging of all equipment covered by extended warranties.

f. Copies of instructions to be posted near selected pieces of equipment where operation is critical for warranty and/or safety reasons.

1.3.2 Performance Bond

The Contractor's Performance Bond shall remain effective throughout the construction period.

a. In the event the Contractor fails to commence and diligently pursue any construction warranty work required, the Contracting Officer will have the work performed by others, and after completion of the work, will charge the remaining construction warranty funds of expenses incurred by the Government while performing the work, including, but not limited to administrative expenses.

b. In the event sufficient funds are not available to cover the construction warranty work performed by the Government at the Contractor's expense, the Contracting Officer will have the right to recoup expenses from the bonding company.

c. Following oral or written notification of required construction warranty repair work, the Contractor shall respond in a timely manner. Written verification will follow oral instructions. Failure of the Contractor to respond will be cause for the Contracting Officer to proceed against the Contractor.

1.3.3 Pre-Warranty Conference

Prior to contract completion, and at a time designated by the Contracting Officer, the Contractor shall meet with the Contracting Officer to develop a mutual understanding with respect to the requirements of this section. Communication procedures for Contractor notification of construction warranty defects, priorities with respect to the type of defect, reasonable time required for Contractor response, and other details deemed necessary by the Contracting Officer for the execution of the construction warranty shall be established/reviewed at this meeting. In connection with these requirements and at the time of the Contractor's quality control completion inspection, the Contractor shall furnish the name, telephone number and address of a licensed and bonded company which is authorized to initiate and pursue construction warranty work action on behalf of the Contractor. This point of contact will be located within the local service area of the warranted construction, shall be continuously available, and shall be responsive to Government inquiry on warranty work action and status. This requirement does not relieve the Contractor of any of its responsibilities in connection with other portions of this provision.

1.3.4 Contractor's Response to Construction Warranty Service Requirements

Following oral or written notification by the Contracting Officer, the Contractor shall respond to construction warranty service requirements in accordance with the "Construction Warranty Service Priority List" and the three categories of priorities listed below. The Contractor shall submit a report on any warranty item that has been repaired during the warranty period. The report shall include the cause of the problem, date reported, corrective action taken, and when the repair was completed. If the Contractor does not perform the construction warranty within the timeframes specified, the Government will perform the work and backcharge the construction warranty payment item established.

a. First Priority Code 1. Perform onsite inspection to evaluate situation, and determine course of action within 4 hours, initiate work within 6 hours and work continuously to completion or relief.

b. Second Priority Code 2. Perform onsite inspection to evaluate situation, and determine course of action within 8 hours, initiate work within 24 hours and work continuously to completion or relief.

c. Third Priority Code 3. All other work to be initiated within 3 work days and work continuously to completion or relief.

1.3.5 Warranty Tags

At the time of installation, each warranted item shall be tagged with a durable, oil and water resistant tag approved by the Contracting Officer. Each tag shall be attached with a copper wire and shall be sprayed with a silicone waterproof coating. The date of acceptance and the QC signature shall remain blank until project is accepted for beneficial occupancy. The tag shall show the following information.

a. Type of product/material_____.

b. Model number_____.

c. Serial number_____.

d. Contract number_____.

e. Warranty period_____from_____to_____.

f. Inspector's signature_____.

g. Construction Contractor_____.

Address_____.

Telephone number_____.

h. Warranty contact_____.

Address_____.

Telephone number_____.

i. Warranty response time priority code_____.

j. WARNING - PROJECT PERSONNEL TO PERFORM ONLY OPERATIONAL MAINTENANCE DURING THE WARRANTY PERIOD.

1.4 MECHANICAL TESTING, ADJUSTING, BALANCING, AND COMMISSIONING

Prior to final inspection and transfer of the completed facility; all reports, statements, certificates, and completed checklists for testing, adjusting, balancing, and commissioning of mechanical systems shall be submitted to and approved by the Contracting Officer as specified in applicable technical specification sections.

1.5 OPERATION AND MAINTENANCE MANUALS

Operation manuals and maintenance manuals shall be submitted as specified. Operation manuals and maintenance manuals provided in a common volume shall be clearly differentiated and shall be separately indexed.

1.6 FINAL CLEANING

The premises shall be left broom clean. Stains, foreign substances, and temporary labels shall be removed from surfaces. Carpet and soft surfaces shall be vacuumed. Equipment and fixtures shall be cleaned to a sanitary condition. Filters of operating equipment shall be cleaned. Debris shall be removed from roofs, drainage systems, gutters, and downspouts. Paved areas shall be swept and landscaped areas shall be raked clean. The site shall have waste, surplus materials, and rubbish removed. The project area shall have temporary structures, barricades, project signs, and construction facilities removed. A list of completed clean-up items shall be submitted on the day of final inspection.

PART 2 PRODUCTS (NOT USED)

PART 3 EXECUTION (NOT USED)

-- End of Section --

SECTION TABLE OF CONTENTS

DIVISION 02 - SITE WORK

SECTION 02210

SUBSURFACE DRILLING, SAMPLING, AND TESTING

PART 1 GENERAL

1.1 REFERENCES
1.2 UNIT PRICES
1.2.1 Soil Report
1.2.1 Payment
1.2.2 Unit of Measure
1.2.3 Mobilization and Demobilization
1.2.3.1 Payment
1.2.3.2 Measurement
1.2.4 Drive Sample Boring and Sampling
1.2.4.1 Payment
1.2.4.2 Measurement
1.2.5 Core Drilling, Vertical Holes
1.2.5.1 Payment
1.2.5.2 Measurement
1.2.6 Soil Sampling and Testing
1.2.6.1 Payment
1.2.6.2 Measurement
1.3 SYSTEM DESCRIPTION
1.3.1 Soil Report
1.3.2 Drive Sample Borings and Sampling
1.3.3 Core Drilling
1.3.4 Test Pit Excavation and Sampling
1.4 LOCATION OF TESTING SITES
1.5 SAMPLING
1.6 SUBMITTALS
1.7 CARE AND DELIVERY OF SAMPLES
1.7.1 General
1.8 PROJECT/SITE CONDITIONS
1.8.1 Field Measurements

PART 2 PRODUCTS

2.1 CONTAINERS
2.1.1 Sample Bags
2.1.2 Shipping Boxes
2.2 LABELS
2.2.1 Sample Bags
2.2.2 Shipping Box Labels

PART 3 EXECUTION

3.1 MOBILIZATION AND DEMOBILIZATION
3.1.1 Mobilization
3.1.2 Demobilization

3.2 EQUIPMENT AND SUPPLIES
3.2.1 Drive Sample Boring and Sampling
3.2.2 Core Drilling
3.2.3 Soil Sampling and Testing
3.3 IDENTIFYING SAMPLES
3.4 DRIVE SAMPLE BORING AND SAMPLING
3.5 CORE DRILLING
3.5.1 Procedure
3.5.2 Labeling, Marking and Packing Core
3.5.3 Disposition of Core
3.6 SOIL SAMPLING
3.6.1 Excavation
3.6.2 Sampling
3.7 SUPPLEMENTAL BORINGS AND EXCAVATIONS
3.8 BACKFILLING
3.8.1 Drill Holes
3.8.2 Excavations
3.9 RECORDS
3.10 CONSTRUCTION QUALITY CONTROL

-- End of Section Table of Contents --

SECTION 02210

SUBSURFACE DRILLING, SAMPLING, AND TESTING

PART 1 GENERAL

1.1 REFERENCES

The publications listed below form a part of this specification to the extent referenced. The publications are referred to in the text by basic designation only.

AMERICAN SOCIETY FOR TESTING AND MATERIALS (ASTM)

ASTM D 1586	(1984; R 1992) Penetration Test and Split-Barrel Sampling for Soils
ASTM D 1587	(1994) Thin-Walled Tube Geotechnical Sampling of Soils
ASTM D 2113	(1983; R 1993) Diamond Core Drilling for Site Investigation
ASTM D 2487	(1993) Classification of Soils for Engineering Purposes (Unified Soil Classification System)
ASTM D 2488	(1993) Description and Identification of Soils (Visual-Manual Procedure)

1.2 UNIT PRICES

All measurements for payment shall be made by or in the presence of the Contracting Officer. The Contractor shall preserve all holes in good condition until final measurement and until the records and samples have been examined and accepted. Payment will be made only for drilling those holes that are included in the SCHEDULE OF DRILLING, SAMPLING, AND TESTING, or are directed by the Contracting Officer to be so drilled or excavated. Payment will not be made for any hole or testing for which satisfactory records (and samples), as determined by the Contracting Officer, are not furnished.

1.2.1 Soil Report

1.2.1 Payment

Payment will be made for costs associated with the base year Line Item 0004AC, "SOIL REPORTS" of the Pricing Schedule. Soil Reports shall be provided when directed by the Contracting Officer.

1.2.2 Unit of Measure

Unit of measure: Each.

1.2.3 Mobilization and Demobilization

1.2.3.1 Payment

Payment will be made for costs associated with with the base year Line Item 0004AD, "MOB & DEMOB" of the Pricing Schedule. Sixty percent of the mobilization and demobilization lump-sum price will be paid following completion of moving onto the site, including complete assembly in working order, of all equipment necessary to perform the required drilling, and sampling operations. The remaining 40 percent of the contract lump sum price will be paid after all site restoration is completed and all equipment has been removed from the site. No separate payment will be made for moves between holes or test pits.

1.2.3.2 Measurement

Unit of measure: Each.

1.2.4 Drive Sample Boring and Sampling

1.2.4.1 Payment

Payment will be made for costs associated with with the base year Line Item 0004AB, "DRIVE SAMPLE BORING & SAMPLING" of the Pricing Schedule.
Drive sample boring and sampling with a standard split barrel sampler is specified in ASTM D 1586. Payment includes the costs for grouting, backfilling, and the replacement of any pavement sections, in kind.
Payment also includes the cost of logging the standard penetrometer blow counts, sampling, and material logging in accordance with ASTM D 2488.

1.2.4.2 Measurement

Measurement for drive sample boring and sampling will be for the number of holes that were actually drilled by auger with SPT (standard penetration test) blow counts and samples being taken the standard split barrel sampler in accordance with the specifications.

1.2.5 Core Drilling, Vertical Holes

1.2.5.1 Payment

Payment will be made for costs associated with the base year Line Items 0004AA, "EXPLORATORY DRILLING BITUM PAVEMENT" and 0004AB, "EXPLORATORY DRILL CONCRETE PAVEMENT" of the Pricing Schedule for 4-inch AC cores and the number of 6-inch PCC cores.
Payment shall be for cores drilled through bituminous pavements and for cores drilled through portland cement concrete pavements. Payment includes compensation for backfilling and the replacement of the pavement section, in kind.

1.2.5.2 Measurement

Core drilling vertical holes will be measured by the number of 6-inch cores actually drilled through bituminous pavement sections and the number of 4-inch cores actually drilled through rigid portland cement concrete pavements in accordance with the specifications.

1.2.6 Soil Sampling and Testing

1.2.6.1 Payment

Payment will be made for costs associated with with the base year Line Item 0004AB, "SOIL SAMPLING AND TESTING" of the Pricing Schedule in accordance with this section. Payment includes compensation for backfilling and the replacement of the pavement section, in kind. Payment also includes the cost of sampling and material logging in accordance with ASTM D 2488.

1.2.6.2 Measurement

Test pit excavation will be measured for payment based upon the contract unit price for each soil sample tested.

1.3 SYSTEM DESCRIPTION

The purpose of the work specified herein is to determine the type, nature, and characteristics of subsurface materials and the extent and conditions of the various materials as they exist to the depths and at the locations specified. This is to be accomplished by means of drive sample borings, undisturbed sample borings, core drilling, and test pits and communicated by means of a Soil Report.

1.3.1 Soil Report

The soil report shall include a site or road layout plan with exploration locations accurately located and numbered. Exploration numbering shall be such that the explorations and exploration logs can not be mistaken for those of another project. The report shall contain exploration logs and all pertinent laboratory data.

1.3.2 Drive Sample Borings and Sampling

A drive sample boring is a boring made through unconsolidated or partly consolidated sediments or decomposed rock by means of a mechanical auger and driven sampler. The purpose of these borings is to obtain knowledge of the composition, the thickness, the depth, the sequence, the structure, and the pertinent physical properties of foundation or borrow materials. Drive sample boring and sampling shall be performed in accordance with ASTM D 1586. Standard penetration tests (SPT's) shall be performed in accordance with ASTM D 1586.

1.3.3 Core Drilling

Drilling of cores through asphaltic concrete pavements and portland cement concrete pavements shall be by any approved standard and accepted method of rotary rock core drilling that will provide continuous and complete cores of the pavement section. Coring shall be performed in accordance with ASTM D 2113. The method used shall provide equally good recovery of cores from both bituminous and portland cement concrete pavements.

1.3.4 Test Pit Excavation and Sampling

A test pit is any excavation in soil, hardpan, decomposed rock, or other unconsolidated or partially consolidated overburden materials which has an open cross-sectional area large enough to permit efficient excavation and shoring/lining, engineering and geological inspection and photographing of the subsurface soils and manual undisturbed sampling from within the test pit. All test pits shall be excavated, dewatered (if necessary), stepped and cut back as necessary, and protected from surface water drainage in accordance with all applicable Federal, State, local, Corps of Engineers,

and OSHA safety regulations.

1.4 LOCATION OF TESTING SITES

Testing sites shall be located throughout all bases and shall consist of obtaining test samples along the centerline of existing roadways (or along other portions of the roadway cross sections, as specified in individual task orders) at a frequency of not less than every 100 feet. Test sites are estimated to be one-half mile to six miles long.

1.5 SAMPLING

Samples shall be taken of the roadway cross section down to and including the first one foot of existing subgrade, except that in no case will holes be drilled deeper than 10 feet.

1.6 SUBMITTALS

Government approval is required for all submittals with a "GA" designation; submittals having an "FIO" designation are for information only. The following shall be submitted in accordance with Section 01330 SUBMITTAL PROCEDURES:

SD-01 Data

Permits, Certifications, and Licenses; FIO.

The Contractor shall comply with all Federal, State and local laws, regulations and ordinances relating to the performance of this work. The Contractor shall, at his own expense, procure all required permits, certifications and licenses required of him by Federal, State, and local law for the execution of this work. Copies of all such documents shall be furnished to the Contracting Officer prior to starting work.

SD-08 Statements

Drilling, Sampling, and Testing Plan; GA.

Prior to starting work, the Contractor shall submit a plan for drilling, sampling, testing, and safety. The plan shall include, but not be limited to, the proposed method of drilling and sampling including a description of the equipment and sampling tools that will be used, a listing of any subcontractors to include a description of how the subcontractors will be used and a description of all methods and procedures that will be utilized to insure a safe operation and to protect the environment. This submittal shall also include a statement of the prior experience, in the type of work described in these specifications, of the person or persons designated to perform the work specified herein. All personnel performing soil classification logging shall be able to demonstrate soil classification and verify through references that they have a minimum of two years experience in soil logging using the Unified Soil Classification System in accordance with ASTM D 2487. No work shall be performed until this plan has been approved and no deviation from the approved plan will be permitted without prior approval by the Contracting Officer.

SD-09 Reports

Soil Reports; GA.

The Contractor shall submit a legible copy of the Soil Report meeting the requirements outlined herein shall be submitted to the Contracting Officer within 15 days after explorations and testing are complete.

SD-18 Records

Drilling Log; GA.

The Contractor shall submit complete, legible copies of DRILLING LOG, ENG FORM 1836 and 1836A and records to the Contracting Officer within 5 days after a hole or test pit is completed.

1.7 CARE AND DELIVERY OF SAMPLES

1.7.1 General

The Contractor shall be solely responsible for preserving all samples in good condition. Samples shall be kept from undue exposure to the weather, and shall keep all descriptive labels and designations on plastic sample bags and boxes clean and legible until final delivery of samples to, and acceptance by, the Contracting Officer unless otherwise specified. Samples shall be delivered within the time limits specified for each type of investigation or in accordance with schedules prepared by the Contracting Officer.

1.8 PROJECT/SITE CONDITIONS

1.8.1 Field Measurements

The actual locations of drill holes and test pits will be established in the field by the Contracting Officer prior to the start of work. The approximate elevations of the established locations will also be provided by the Contracting Officer prior to the start of work. The Contractor will provide access to the locations as he deems necessary for the prosecution of the work. Since no separate payment will be made for access construction, all costs associated with this shall be included in the cost of drilling and excavating.

PART 2 PRODUCTS

2.1 CONTAINERS

The Contractor shall furnish plastic bags and sample boxes that meet the following requirements. All such containers will become the property of the Government and the cost thereof shall be included in the contract price for the applicable item for which payment is provided.

2.1.1 Sample Bags

Plastic sample bags shall be substantial equal to bags provided to the Corps of Engineers by the Associated Bag Company (stock no. 277-6-20W 9 x 12.4 mil).

2.1.2 Shipping Boxes

Boxes for shipping cores shall be wooden boxes that have the capacity and the strength to contain and protect the cores under ordinary handling and environmental conditions.

2.2 LABELS

2.2.1 Sample Bags

Plastic sample bags shall be clearly and indelibly labeled with the Base, Date, Project, Exploration Number, Sample Number, and depth interval.

2.2.2 Shipping Box Labels

Each box of samples shall be identified with weatherproof and wear-proof labels indicating the following:

PROJECT: _____

LOCATION: _____ DEPTHS: _____

CORE SAMPLES FROM HOLE OR HOLES: _____

PART 3 EXECUTION

3.1 MOBILIZATION AND DEMOBILIZATION

3.1.1 Mobilization

Mobilization shall consist of the delivery to the site of all plant, equipment, materials and supplies to be furnished by the Contractor, the complete assembly in satisfactory working order of all such plant and equipment at the jobsite and the satisfactory storage at the site of all such materials and supplies.

3.1.2 Demobilization

Demobilization shall consist of the removal from the site of all plant, equipment, materials and supplies after completion of the work and also includes, at the direction of the Contracting Officer, the cleanup and removal of all scrap, waste backfill material, waste drilling fluid, soil contaminated with engine/hydraulic oil, backfilling all sumps or excavations resulting from the operations and, in general, returning the site as close to its original condition as possible.

3.2 EQUIPMENT AND SUPPLIES

3.2.1 Drive Sample Boring and Sampling

Equipment to be furnished by the Contractor for making drive sample borings shall include, but not be limited to, standard 2-inch OD split barrel drive samplers and power-driven drilling machinery of a type or types approved by the Contracting Officer, complete with a 140-pound drive hammer. The hammer shall be a safety hammer with an automatic trip type hammer. All hammers shall be in good condition and calibrated to give a uniform 30 inch lift over repeated cycles. The drive shoe for the split barrel samplers shall be of hardened steel and shall be replaced or repaired when it becomes dented or distorted. Supplies shall include, but not be limited to, all casing, the required length of drill stem, drill bits, drill fluid and additives, pumps, and power necessary to accomplish the required boring and sampling.

3.2.2 Core Drilling

Equipment to be furnished by the Contractor for core drilling shall include core-drilling machinery of a type or types approved by the Contracting Officer complete with all the accessories needed to take continuous cores through asphalt concrete and portland cement concrete pavements. Supplies for core drilling to be furnished by the Contractor shall include, but not be limited to, all casing, drill rods, core barrels, coring bits, piping, pumps, water, tools, and power required for drilling and all boxes and containers required for core samples.

3.2.3 Soil Sampling and Testing

Selection of the sampling methods and equipment shall be at the Contractor's discretion but must be approved by the Contracting Officer. The Contractor shall also comply with all applicable safety regulations.

3.3 IDENTIFYING SAMPLES

Sample jars, shipping boxes, and labels shall comply with PART 2, paragraphs, SHIPPING BOXES, and LABELS, respectively. The Contractor shall take all precautions required to insure that the shipping boxes are not subjected to rough handling or damaging environmental conditions, and complies with paragraph CARE AND DELIVERY OF SAMPLES.

3.4 DRIVE SAMPLE BORING AND SAMPLING

Samples shall be labeled in accordance with paragraph IDENTIFYING SAMPLES. Samples shall be taken continuously at maximum vertical intervals of 2 feet or as otherwise directed by the Contracting Officer. The sampler shall be driven with the force of the 140 pound drive hammer under a free fall of 30 inches. If a hollow stem auger is used as a casing and/or to advance the boring, a plug assembly must be used to keep soil from entering the inside of the auger. Above the water table, samples shall be obtained from a dry hole. Below the water table, water shall be maintained within the hole at or above the groundwater level. Where information on the natural water content of soils above the water table is not needed and when approved by the Contacting Officer, boreholes may be drilled without casing by using a suitable drilling fluid to prevent collapse of sidewalls. When a drilling fluid is used, soil sampling shall be done by such means that will prevent inclusion of drilling fluid in the samples. The samples shall logged as soon as possible after they are taken from the hole. Samples shall be taken from the depths directed and placed in plastic sample bags as soon as possible after they field logged and taken from the hole. All sample bags shall be labeled.

3.5 CORE DRILLING

3.5.1 Procedure

All holes shall be drilled vertically to the bottom of the bituminous wearing course (AC) or portland cement concrete section. As required, a split spoon drive sampler shall be used to measure the thickness and density of the aggregate base course under the wearing course or portland cement concrete pavement. Off-setting of borings from the locations specified in the Plan of Borings or as shown on the drawings, will not be permitted without prior approval. Casing through the overburden may be required. The Contracting Officer may require redrilling, at the Contractor's expense, of any boring from which the core recovery is unsatisfactory.

3.5.2 Labeling, Marking and Packing Core

Cores shall be labeled with the exploration number, location, and date. Cores shall be wrapped in "bubble-wrap" and placed in boxes.

3.5.3 Disposition of Core

While on site, the Contractor shall protect the filled core boxes from direct sunlight, precipitation, and freezing by some form of Contracting Officer approved shelter that allows ventilation to the boxes. Upon completion of core drilling and sampling operations, core boxes containing cores shall be stored in an area provided by the Contracting Officer or shipped to the address provided by the Contracting Officer.

3.6 SOIL SAMPLING AND TESTING

3.6.1 Excavation

Soil shall be excavated to depths indicated. Before excavating, the Contractor shall thoroughly familiarize himself with work site and with all available subsurface data, particularly groundwater conditions. Regardless of the method of excavation employed, the excavations shall dewatered, cut back in conformance with all applicable safety regulations, and sampled and logged.

3.6.2 Sampling

Soil samples shall be obtained from each excavation as directed by the Contracting Officer. Plastic bags shall be used for the collection of disturbed samples.

3.7 SUPPLEMENTAL BORINGS AND EXCAVATIONS

Borings and excavations that are abandoned or from which unsatisfactory samples or cores are obtained will be supplemented by other borings and excavations adjacent to the originals in order that satisfactory samples or the required information will be obtained. Actual locations of any supplemental borings and excavations will be established by the Contracting Officer. Penetration to the depth where the original was abandoned or to the depths where unsatisfactory samples were obtained may be made by any method selected by the Contractor that in the opinion of the Contracting Officer will permit satisfactory completion and sampling below the elevation where the last satisfactory sample was obtained in the abandoned or satisfactory sampling in the reaches where satisfactory samples were not obtained in the original borings and excavations. No payment will be made for supplemental borings and excavations that are required to be drilled or excavated to replace borings and excavations that were abandoned or from which satisfactory samples were not obtained because of mechanical failure of drilling and sampling equipment, negligence on the part of the Contractor, or other preventable cause for which the Contractor is responsible except that payment will be made for acceptable portions of these supplementary borings and excavations below the depths or outside the reaches for which payment was made for the original borings and excavations.

3.8 BACKFILLING

3.8.1 Drill Holes

Unless otherwise noted in these specifications or directed by the Contracting Officer, all drill holes shall be backfilled and abandoned in accordance with all Federal, State, and local laws, regulations and ordinances. The Contractor shall preserve all holes in good condition until final measurement and until the completion of field logging and samples have been taken. As a minimum, all holes shall be grouted from the bottom of the hole to within 5 feet of the ground surface using a grout mixture of six to eight gallons of water per (94 pound) sack of Portland cement. All grout shall be pumped through a tremie pipe that is inserted to the bottom of the boring to insure that the grout fills the full extent of the hole. The remaining ungrouted top 5 feet of the hole shall be backfilled with local soil and tamped. Pavement sections shall be replaced to match the original sections and materials that were penetrated. No separate payment will be made for backfilling drill holes; the cost of this work shall be included in the drilling and coring costs.

3.8.2 Excavations

The Contractor shall backfill all test excavations with local soil. All excavated soil shall be placed in the excavation and compacted. Pavement sections, where encountered, shall be replaced to match the original sections that were penetrated. No separate payment will be made for backfilling test excavations. The cost of this work shall be included in the test excavation costs.

3.9 RECORDS

The Contractor shall keep accurate driller's logs (DRILLING LOG, ENG FORM 1836, and 1836-A will be provided by the Contacting Officer) and records of all work accomplished under this contract and shall deliver complete, legible copies of these logs and records to the Contracting Officer within 5 days after the exploration is completed, unless otherwise directed. All such records shall be recorded during the actual performance of the work and shall be preserved in good condition and order by the Contractor until they are delivered and accepted. The Contracting Officer shall have the right to examine and review all such records at any time prior to their delivery to him and shall have the right to request changes to the record keeping procedure. The following information shall be included on the logs or in the records for each hole and test pit:

a. Hole or test pit number or designation and the approximate elevation of top of hole or test pit.

b. Driller's name and Inspector's name.

c. Make, size, and manufacturer's model designation of drilling or test-pit excavation equipment.

d. Type of drilling and sampling operation by depth.

e. Hole or excavation dimensions.

f. Dates and time by depths when the test-pit excavation, drilling, or sampling operations were performed.

g. Time required for drilling or excavation.

h. Drill action, rotation speed, hydraulic pressure, water pressure, tool drops, and any other unusual and non-ordinary experience which

could indicate the subsurface conditions encountered.

i. Depths at which samples were recovered or attempts made to sample including the top and bottom depth of each run.

j. Classification or description by depths of the materials sampled, penetrated using the Unified Soil Classification System (ASTM D 2487) and including a description of moisture conditions, consistency and other appropriate descriptive information described in paragraph REPORT of ASTM D 2488. This classification or description shall be made immediately after the samples are retrieved.

k. Indication of penetration resistance such as drive-hammer blows given in blows per foot for driving sample spoons and the pressure in pounds per square inch applied to push thin-wall or piston-type samplers.

l. Weight of drive hammer.

m. Percentage of sample or core recovered per run.

n. Depth at which groundwater is encountered initially and when stabilized.

o. Depths at which drill water is lost and regained and amounts.

p. Depths at which the color of the drill water return changes.

q. Type and weight of drill fluid.

r. Depth of bottom of hole.

3.10 CONSTRUCTION QUALITY CONTROL

Attention is directed to the applicable sections which requires the Contractor to perform quality control inspection, testing, and reporting.

-- End of Section --

SECTION TABLE OF CONTENTS

DIVISION 02 - SITE WORK

SECTION 02213

PAVING GEOSYNTHETICS

PART 1 GENERAL

1.1 DESCRIPTION
1.2 REFERENCES
1.3 SUBMITTALS
1.4 MEASUREMENT
1.5 PAYMENT
1.6 GEOTEXTILE PACKING AND STORING
1.7 WEATHER LIMITATIONS

PART 2 PRODUCTS

2.1 MATERIALS
2.1.1 Paving Geosynthetic
2.1.2 Asphalt Sealant
2.1.3 Aggregate
2.2 EQUIPMENT
2.2.1 Asphalt Distributor
2.2.2 Geotextile Handling Equipment
2.2.3 Vacumm Sweeper
2.2.4 Miscellaneous Equipment

PART 3 EXECUTION

3.1 SURFACE PREPARATION
3.2 APPLICATION OF ASPHALT SEALANT
3.3 INSTALLATION OF THE GEOTEXTILE
3.3.1 General
3.3.2 Placement
3.3.3 Geotextile Trafficking
3.4 ASPHALT OVERLAY
3.5 GLASS GRID STORAGE AND INSTALLATION

-- End of Section Table of Contents --

SECTION 02213

PAVING GEOSYNTHETICS

PART 1 GENERAL

1.1 DESCRIPTION

Work shall consist of furnishing and placing a geotextile or an open fiber glass mesh grid between pavement layers for the purpose of incorporating reinforcement within the pavement structure. This specification guide is applicable to geotextiles or grids used for full coverage of the pavement, or as strips over transverse and longitudinal pavement joints. It is not intended to describe geotextile or grid systems specifically for pavement joints and localized (spot) repairs.

1.2 REFERENCES

The publications listed below form a part of this specification to the extent referenced. The publications are referred to in the text by basic designation only.

AMERICAN SOCIETY FOR TESTING AND MATERIALS (ASTM)

ASTM D 276	(1987) Method for Identification of Fibers in Textiles
ASTM D 3776	(1985,R 1990) Mass per Unit Area (Weight) of Woven geotextile
ASTM D 4632	(1991) Grab Breaking Load and Elongation of Geotextiles
ASTM D 5261	(1992) Mass per Unit Area of Geotextiles

GEOSYNTHETIC RESEARCH INSTITUTE (GRI)

GG 1-87	Component Strand Strength and Elongation of Geotextiles

AMERICAN ASSOCIATION OF STATE HIGHWAY AND TRANSPORTATION OFFICIALS (AASHTO)

AASHTO M 288	(1992) Geotextiles Used for Subsurface Drainage Purposes

1.3 SUBMITTALS

Government approval is required for all submittals with a "GA" designation; submittals having an "FIO" designation are for information only. The following shall be submitted in accordance with Section 01330 SUBMITTAL PROCEDURES:

SD-13 Certificates

Geotextile; GA.

The Contractor shall submit a certification of the geotextiles material from the manufacturer. The Contractor shall furnish the Contracting Officer, in duplicate, a mill certificate or affidavit signed by a legally authorized official from the company manufacturing the geotextile. The mill certificate or affidavit shall attest that the geotextile meets the chemical, physical and manufacturing requirements stated in this specification.

SD-14 Samples

Geotextile, Glass Mesh Grid & Asphalt Sealant for Paving Geotextile; FIO.

If requested by the Contracting Officer, the Contractor shall provide to the Government geotextile or glass mesh grid, and asphalt sealant for testing to determine compliance with any or all of the requirements in this specification. When samples are to be provided, they shall be submitted a minimum of 60 days prior to the beginning of installation of the same textile. A written certificate of compliance signed by a legally authorized official from the company shall be submitted, in duplicate, upon delivery of the geotextile. The certificate shall state that the geotextile shipped to the site meets the chemical requirements and exceeds the minimum average roll value listed in TABLE 1, MINIMUM PHYSICAL REQUIREMENTS FOR PAVING GEOSYNTHETICS. Upon request, the contractor shall supply quality control and quality assurance tests for the geotextile. All samples provided shall be from the same production lot as will be supplied for the contract, and shall be the full manufactured width of the geotextile by at least 10 feet long.

1.4 MEASUREMENT

Measurement will be made of the as-built surface area in square yards covered by the geosynthetic. No allowance will be made for waste, overlaps, damaged materials, repairs, or materials used for the convenience of the Contractor.

1.5 PAYMENT

Geosynthetic installed and accepted will be paid for at the respective contract unit price for the base year Line Item 0001AK, "PAVEMENT GEOTEXTILE" and 0001AL, "GLASS MESH GRID" of the Pricing Schedule. This unit price shall include the cost of geosynthetic, asphalt sealant, equipment, installation, testing, and other costs associated with placement of the geosynthetic.

1.6 GEOTEXTILE PACKING AND STORING

Geotextile rolls shall be furnished with suitable wrapping for protection against moisture and extended ultra-violet exposure prior to placement. Each roll shall be labeled or tagged to provide product identification sufficient for inventory and quality control purposes. Rolls shall be stored in a manner which protects them from the elements. If stored outdoors, they shall be elevated and protected with a waterproof cover.

1.7 WEATHER LIMITATIONS

Neither the asphalt sealant nor geotextile shall be placed when weather conditions are not suitable. Air and pavement temperatures shall be sufficient to allow the asphalt sealant to hold the geosynthetic in place.

For asphalt cements, air temperature shall be 50 degrees F and rising. When using asphalt emulsions, air temperature shall be 60 degrees F and rising.

PART 2 PRODUCTS

2.1 MATERIALS

2.1.1 Paving Geosynthetic

One the following two geosynthetics shall be used: the first is a non-woven fabric; the second is a high strength open fiber glass mesh grid. The geotextile shall be constructed of non-woven synthetic fibers; resistant to chemical attack, mildew, and rot; and shall meet the following physical requirements:

TABLE 1

MINIMUM PHYSICAL REQUIREMENTS FOR PAVING GEOSYNTHETICS

Property	Requirements	Test Method
-Breaking load, pounds/inch of width.	80 minimum	ASTM D 4632
-Elongation-at-Break, percent	50 minimum	ASTM D 4632
-Asphalt Retention, gal./sq. yd.	0.2 minimum	AASHTO M 288
-Melting Point, degrees F	300 minimum	ASTM D 276
-Weight, ounce/sq. yd.	3-9	ASTM D 3776 Option B

The open fiber glass mesh grid shall be constructed of fiber glass yarns knitted in a stable construction that conforms to the properties of the table below. The values listed represent certifiable average minimum roll values in the weakest principal direction of the grid.

Property	Requirements	Test Method
-Component Strand Strength, pounds/inch of width.	560 minimum	GRI GG 1-87
-Elongation-at-Break, percent	5 maximum	ASTM D 4632
-Melting Point, degrees F	425 minimum	ASTM D 276
-Mass/Unit Area, ounces/sq. yd.	11 minimum	ASTM D 3776

2.1.2 Asphalt Sealant

The asphalt sealant is used to impregnate and seal the geotextile as well as bond it to both the base pavement and overlay. The grade of asphalt cement specified for hot-mix AC pavement in each geographic location is generally the most acceptable material. Either cationic and anionic emulsions may be used provided the precautions outlined in section "Application of Asphalt Sealant". Cutbacks and emulsions which contain solvents shall not be used.

2.1.3 Aggregate

Washed concrete sand may be spread over asphalt-saturated geotextile to facilitate movement of equipment during construction or to prevent tearing or delamination of the geotextile. Hot-mix broadcast in front of construction vehicle tires may also be used to serve this purpose. If sand is applied, excess quantities shall be removed from the geotextile prior to placing the surface course.

2.2 EQUIPMENT

2.2.1 Asphalt Distributor

The asphalt distributor shall be capable of spraying the asphalt sealant at the prescribed uniform application rate. No streaking, skipping, or dripping will be permitted. The distributor shall also be equipped with a hand spray having a single nozzle and positive shut-off valve.

2.2.2 Geotextile Handling Equipment

Mechanical or manual lay down equipment shall be capable of laying the geotextile smoothly.

2.2.3 Vacumm Sweeper

Self-propelled, vacuum pickup capable of completely removing loose material and debris from pavement surface.

2.2.4 Miscellaneous Equipment

Stiff bristle brooms or squeegees to smooth the geotextile, scissors or blades to cut the geotextile, and brushes for applying asphalt sealant at geotextile overlaps shall be provided. Pneumatic rolling equipment to ensure that the geotextile is bonded to existing pavement. The pneumatic roller should be in good working condition with smooth tires. The roller size should range between 8 and 15 tons, and the tire pressure may be decreased to 60-70 pounds per square inch.

PART 3 EXECUTION

3.1 SURFACE PREPARATION

The surface on which the geotextile or grid is to be placed shall be reasonably free of dirt, water, vegetation, or other debris. Cracks exceeding 1/8 inch in width shall be filled with a suitable crack filler and potholes shall be properly repaired as directed by the Contracting Officer. The crack fillers shall be allowed to cure prior to geotextile placement.

3.2 APPLICATION OF ASPHALT SEALANT

Prior to installing the geotextile, the asphalt sealant shall be uniformly spray applied to the prepared dry pavement surface at the rate 0.20 to 0.30 gallons per square yard or as recommended by the geotextile manufacturer and approved by the Contracting Officer. Application of the sealant shall be by distributor spray bar, with hand spraying kept to a minimum. Temperature of the asphalt sealant shall be sufficiently high to permit a uniform spray pattern. For asphalt cements the minimum temperature shall

be 290°F. To avoid damage to the geotextile, however, distributor tank temperatures shall not exceed 325°F. Spray patterns for asphalt emulsion are improved by heating. Temperatures in the 130 to 160°F range are desirable. A temperature of 160°F shall not be exceeded since higher temperatures may break the emulsion. The target width of asphalt sealant application shall be geotextile width plus 6 inches. The asphalt sealant shall not be applied any further in advance of geotextile placement than the distance which the contractor can maintain free of traffic. Asphalt spills shall be cleaned from the road surface to avoid flushing and geotextile movement. When asphalt emulsions are used, the emulsion shall be cured (essentially no moisture remaining) prior to placing the geotextile and final wearing surface.

3.3 INSTALLATION OF THE GEOTEXTILE

3.3.1 General

Placement of the geotextile shall be made only under the following conditions:

- The ambient air temperature is above 50°F and rising.
- The pavement is dry and pavement temperature is 40°F and rising.

3.3.2 Placement

The geotextile shall be placed into the asphalt sealant with minimum wrinkling prior to the time the asphalt has cooled and lost tackiness. As directed by the Contracting Office, wrinkles or folds in excess of 1 inch shall be slit and laid flat. Brooming and/or pneumatic rolling will be required to maximize geotextile contact with the pavement surface. The geotextile shall overlap 2 to 6 inches at the longitudinal joints and no more than 2 inches at the transverse joints. No joints shall be lapped with more than two layers of geotextile. Transverse joints shall be shingled in the direction of the paving to prevent edge pickup by the paver. Transverse joints may be tacked down with roofing nails spaced every foot across the width of the geotextile. A minimum of 3 to 6 inches overlap should be used if this procedure is specified. A second application of asphalt sealant to geotextile overlaps will be required if in the judgment of the Contracting Officer additional asphalt sealant is needed to ensure proper bonding of the double geotextile layer. Removal and replacement of geotextile that is damaged will be the responsibility of the contractor.

3.3.3 Geotextile Trafficking

Trafficking the geotextile will be permitted for emergency or construction equipment only. Turning of the paving machine or of other vehicles on the geotextile should be gradual and shall be kept to a minimum to avoid damage to the membrane. Should equipment tires tend to stick to the geotextile during pavement operations, small quantities of asphalt concrete shall be broadcast ahead to prevent pick-up of the geotextile. Do not decrease tack rate in order to minimize pick-up on tires.

3.4 ASPHALT OVERLAY

Placement of the hot mix overlay should closely follow geotextile lay down. The temperature of the mix shall not exceed 325°F. In the event asphalt bleeds through the geotextile causing construction problems before the overlay is placed, the affected areas shall be blotted by spreading sand or hot-mix. To avoid movement or damage to the geotextile membrane, turning

of the paver and other vehicles shall be gradual and kept to a minimum.

3.5 GLASS GRID STORAGE AND INSTALLATION

Grid must be stored according to the manufacturer's recommendations and be kept free from dust, dirt and moisture. Installation of the glass grid shall be per the manufacturer's recommendations.

-- End of Section --

SECTION TABLE OF CONTENTS

DIVISION 02 - SITE WORK

SECTION 02216

REINFORCEMENT GEOTEXTILE

PART 1 GENERAL

1.1 Scope of Work
1.2 REFERENCES
1.3 MEASUREMENT
1.4 PAYMENT
1.5 SUBMITTALS
1.6 DELIVERY, STORAGE AND HANDLING

PART 2 PRODUCTS

2.1 MATERIALS
2.1.1 Geotextile

PART 3 EXECUTION

3.1 SURFACE PREPARATION
3.2 INSTALLATION
3.3 PROTECTION
3.4 SEAMING
3.4.1 Overlap Seams
3.4.2 Sewn Seams
3.5 REPAIRS

-- End of Section Table of Contents --

SECTION 02216

REINFORCEMENT GEOTEXTILE

PART 1 GENERAL

1.1 Scope of Work

This section covers the requirements for geotextile reinforcement and separation above a soft subgrade soil and below the aggregate base course layer.

1.2 REFERENCES

The publications listed below form a part of the specification to the extent referenced. The publications are referred to in the text by basic designation only.

AMERICAN SOCIETY FOR TESTING AND MATERIALS (ASTM)

ASTM D 4491	(1995) Water Permeability of Geotextiles by Permittivity
ASTM D 4595	(1986, R 1994) Tensile Properties of Geotextiles by the Wide-Width Strip Method
ASTM D 4884	(1990) Seam Strength of Sewn Geotextiles
ASTM D 5321	Determining the Coefficient of Soil/Geosynthetic Friction by the Direct Sliding Method

1.3 MEASUREMENT

Measurement will be made of the as-built surface area in square yards covered by geotextile. Allowance will be made for geotextile in unstable material remediation but no allowance will be made for waste, overlaps, damaged materials, repairs, or materials used for the convenience of the Contractor.

1.4 PAYMENT

Geotextile installed and accepted will be paid for at the respective contract unit price for the base year Line Item 0001AS, "REINFORCING FABRIC" in the Pricing Schedule. This unit price shall include the cost of materials, equipment, installation, testing, and other costs associated with placement of the geotextile.

1.5 SUBMITTALS

Government approval is required for submittals with a "GA" designation. Submittals having an "FIO" designation are for information only. The following shall be submitted in accordance with SECTION 01330 SUBMITTAL PROCEDURES:

SD-13 Certificates

Geotextile; FIO.

The Contractor shall submit a certification of the geotextile material from the manufacturer. The Contractor shall furnish the Contracting Officer, in duplicate, a mill certificate or affidavit signed by a legally authorized official from the company manufacturing the geotextile. The mill certificate or affidavit shall attest that the geotextile meets the chemical, physical and manufacturing requirements stated in this specification.

SD-14 Samples

Geotextile; FIO.

A minimum of 14 days prior to scheduled use, one sample shall be provided for testing. The sample shall be the full manufactured width of the geotextile and a minimum of 5 feet in length, folded over and the edges stitched with the same thread type, stitch density, and machine that will be used during construction. A smaller sample will be approved when no testing of the samples will be performed by the Government.

1.6 DELIVERY, STORAGE AND HANDLING

The Contractor shall inspect the materials upon delivery to assure that the proper type and grade have been received. The Contractor shall protect all materials from damage. All geosynthetic materials shall be stored at temperatures above 20°F and below 140°F. Rolls of geosynthetic reinforcements may be laid flat and may not be exposed to sunlight for more than 30 days. For extended storage the geosynthetic materials should be covered to prevent damage from long term exposure to sunlight. Any materials damaged during storage shall be replaced by the contractor at no additional cost to the owner.

PART 2 PRODUCTS

2.1 MATERIALS

2.1.1 Geotextile

The geotextile shall be a woven pervious sheet of polymeric material and shall consist of long-chain synthetic polymers composed of at least 85 percent by weight polyolefins, polyesters, or polyamides. Stabilizers and/or inhibitors shall be added to the base polymer if necessary to make the filaments resistant to deterioration by ultraviolet light, oxidation, and heat exposure. Regrind material which consists of edge trimming and other scraps that have never reached the consumer may be used to produce the geotextile. Post-consumer recycled material shall not be used. Geotextile shall be formed into a network such that the filaments or yarns retain dimensional stability relative to each other, including the selvages. The geotextile physical properties shall equal or exceed the following minimum average roll values in both the machine direction and cross-machine direction.

TABLE 1

PHYSICAL REQUIREMENTS FOR REINFORCEMENT GEOTEXTILE

Property	Requirements	Units	Test Method
Ultimate Tensile Strength	225	lbs/in	ASTM D 4595
Tensile Strength @ 5% Strain	110	lbs/in	ASTM D 4595
Tensile Strength @ 2% Strain	45	lbs/in	ASTM D 4595
Coefficient of Interaction - Ci (sand)	0.8		ASTM D 5321
Flow Capacity	100	gpm/ft	ASTM D 4491
Seam Strength	100	lbs/in	ASTM D 4884

PART 3 EXECUTION

3.1 SURFACE PREPARATION

The surface underlying the geotextile shall be smooth and free of ruts or protrusions which could damage the geotextile. Subgrade materials and compaction requirements shall be in accordance with Section 02300 EARTHWORK.

3.2 INSTALLATION

The Contracting Officer shall be present during handling and installation. Geotextile rolls which are damaged or contain imperfections shall be repaired or replaced as directed. The geotextile shall be laid smooth to avoid undue tensile stresses, folds, and wrinkles.

3.3 PROTECTION

The geotextile shall be protected during installation from clogging, tears, and other damage. Damaged geotextile shall be repaired or replaced as directed. Adequate ballast (e.g. sand bags) shall be used to prevent uplift by wind. Staples or pins shall not be used to hold the geotextile in place. The geotextile shall not be left uncovered for more than 14 days during installation. The initial loose soil lift height over the geotextile shall be between 8 inches and 12 inches. Equipment with ground pressures less than 5.0 psi shall be used to place the first lift over the geotextile. Overlying materials shall be deployed such that the geotextile is not shifted, damaged, or placed in tension. Cover soil shall be placed from the bottom of the slope upward. Cover soil placed from a bucket shall be dropped from a height no greater than 3 feet.

3.4 SEAMING

3.4.1 Overlap Seams

Geotextile panels shall be continuously overlapped a minimum of 12 inches. Where it is required that seams be oriented across the slope, the upper sheet shall be lapped over the lower sheet. The Contractor has the option of field sewing instead of overlapping.

3.4.2 Sewn Seams

Seams shall be sewn at the locations shown on the drawings. Seams shall be continuously sewn using a flat seam with one row of a two-thread chain stitch unless otherwise recommended by the manufacturer. The minimum distance from the geotextile edge to the stitch line nearest to that edge shall be 3 inches unless otherwise recommended by the manufacturer. The thread at the end of each seam run shall be tied off to prevent unraveling. Seams shall be on the top side of the geotextile to allow inspection. Skipped stitches or discontinuities shall be sewn with an extra line of stitching with 18 inches of overlap.

3.5 REPAIRS

Geotextile damaged during installation shall be repaired by placing a patch of the same type of geotextile which extends a minimum of 12 inches beyond the edge of the damage or defect. Patches shall be continuously fastened using a sewn seam or other approved method. The machine direction of the patch shall be aligned with the machine direction of the geotextile being repaired. Geotextile which cannot be repaired shall be replaced.

-- End of Section --

SECTION TABLE OF CONTENTS

DIVISION 02 - SITE WORK

SECTION 02220

DEMOLITION

PART 1 GENERAL

1.1 REFERENCES
1.2 GENERAL REQUIREMENTS
1.3 MEASUREMENT
1.4 PAYMENT
1.5 SUBMITTALS
1.6 DUST CONTROL
1.7 PROTECTION
1.7.1 Protection of Personnel
1.7.2 Protection of Structures
1.7.3 Protection of Existing Property
1.7.4 Protection From the Weather
1.7.5 Protection of Trees
1.7.6 Environmental Protection
1.8 BURNING
1.9 USE OF EXPLOSIVES

PART 2 PRODUCTS (Not Applicable)

PART 3 EXECUTION

3.1 EXISTING STRUCTURES
3.2 UTILITIES
3.3 FILLING
3.4 DISPOSITION OF MATERIAL
3.4.1 Salvageable Items and Material
3.4.1.1 Material Salvaged for the Contractor
3.4.1.2 Items Salvaged for the Government
3.4.1.3 Items Salvaged for the Using Service
3.4.1.4 Historical Items
3.4.2 Unsalvageable Material
3.5 CLEAN UP
3.6 PAVEMENTS
3.6.1 Existing Rigid Pavement
3.6.2 Existing Flexible Pavement

-- End of Section Table of Contents --

SECTION 02220

DEMOLITION

PART 1 GENERAL

1.1 REFERENCES

The publications listed below form a part of this specification to the extent referenced. The publications are referred to in the text by basic designation only.

ENGINEERING MANUALS (EM)

EM 385-1-1	(1996) U.S. Army Corps of Engineers Safety and Health Requirements Manual

1.2 GENERAL REQUIREMENTS

The work includes demolition, salvage of identified items and materials, and removal of resulting rubbish and debris. Rubbish and debris shall be removed from Government property daily, unless otherwise directed, to avoid accumulation at the demolition site. Materials that cannot be removed daily shall be stored in areas specified by the Contracting Officer. In the interest of occupational safety and health, the work shall be performed in accordance with EM 385-1-1, Section 23, Demolition, and other applicable Sections. In the interest of conservation, salvage shall be pursued to the maximum extent possible; salvaged items and materials shall be disposed of as specified.

1.3 MEASUREMENT

Demolition work shall be measured as part of the construction work for each line item of the Pricing Schedule unless otherwise listed on the Pricing Schedule. Demolition of curbs, gutters, and sidewalks will be measured in cubic yards.

1.4 PAYMENT

Payment shall be consider as part of the compensation for the work to be performed as construction for each particular option year line item of the Pricing Schedule unless specifically listed in the Pricing Schedule. No additional compensation shall be forthcoming for excessive demolition or the repair or replacement of this, or for demolition work performed solely for the convenience of the Contractor. Compensation for curb, gutter, and sidewalk demolition shall for the base year Line Items 0031A, "DEMO CURB AND GUTTER" and 0031AB, "DEMO SIDEWALK" of the Pricing Schedule..

1.5 SUBMITTALS

Government approval is required for submittals with a "GA" designation; submittals having an "FIO" designation are for information only. The following shall be submitted in accordance with Section 01330 SUBMITTAL PROCEDURES:

SD-08 Statements

Work Plan; GA.

The procedures proposed for the accomplishment of the work. The procedures shall provide for safe conduct of the work, including procedures and methods to provide necessary supports, lateral bracing and shoring when required, careful removal and disposition of materials specified to be salvaged, protection of property which is to remain undisturbed, coordination with other work in progress, and timely disconnection of utility services. The procedures shall include a detailed description of the methods and equipment to be used for each operation, and the sequence of operations in accordance with EM 385-1-1.

1.6 DUST CONTROL

The amount of dust resulting from demolition shall be controlled to prevent the spread of dust to occupied portions of the construction site and to avoid creation of a nuisance in the surrounding area. Use of water will not be permitted when it will result in, or create, hazardous or objectionable conditions such as flooding and pollution.

1.7 PROTECTION

1.7.1 Protection of Personnel

During the demolition work the Contractor shall continuously evaluate the condition of the structure being demolished and take immediate action to protect all personnel working in and around the demolition site. No excavations or structural elements will be allowed to be left open or standing without sufficient bracing, shoring, or lateral support to prevent collapse or failure while workmen remove debris or perform other work in the immediate area.

1.7.2 Protection of Structures

Walls and other structural components that are designed and constructed to stand without lateral support or shoring, and are determined to be in stable condition, shall remain standing without additional bracing, shoring, of lateral support until demolished, unless directed otherwise by the Contracting Officer. The Contractor shall ensure that no elements determined to be unstable are left unsupported and shall be responsible for placing and securing bracing, shoring, or lateral supports as may be required as a result of any cutting, removal, or demolition work performed under this contract.

1.7.3 Protection of Existing Property

Before beginning any demolition work, the Contractor shall survey the site and examine the drawings and specifications to determine the extent of the work. The Contractor shall take necessary precautions to avoid damage to existing items to remain in place, to be reused, or to remain the property of the Government; any damaged items shall be repaired or replaced as approved by the Contracting Officer. The Contractor shall coordinate the work of this section with all other work and shall construct and maintain shoring, bracing, and supports as required. The Contractor shall ensure that structural elements are not overloaded and shall be responsible for increasing structural supports or adding new supports as may be required as

a result of any cutting, removal, or demolition work performed under this contract.

1.7.4 Protection From the Weather

Salvageable materials and equipment shall be protected from the weather at all times.

1.7.5 Protection of Trees

Trees within the project site which might be damaged during demolition, and which are indicated to be left in place, shall be protected by a 6 foot high fence. The fence shall be securely erected a minimum of 5 feet from the trunk of individual trees or follow the outer perimeter of branches or clumps of trees. Any tree designated to remain that is damaged during the work under this contract shall be replaced in kind or as approved by the Contracting Officer.

1.7.6 Environmental Protection

The work shall comply with the requirements of Section 01410 ENVIRONMENT PROTECTION.

1.8 BURNING

The use of burning at the project site for the disposal of refuse and debris will not be permitted.

1.9 USE OF EXPLOSIVES

Use of explosives will not be permitted.

PART 2 PRODUCTS (Not Applicable)

PART 3 EXECUTION

3.1 EXISTING STRUCTURES

Existing structures indicated shall be completely removed. All foundations, walls, and utilities are to be completely removed, full depth, unless otherwise indicated. Sidewalks, curbs, gutters and street light bases shall be removed as indicated. Excavation work shall be performed in strict accordance with the safety requirements of Section 25 of EM 385-1-1.

3.2 UTILITIES

Disconnection of utility services, with related meters and equipment shall be as shown and specified in the applicable sections. Excavations shall be backfilled and compacted as specified in Section 02316 EXCAVATION, TRENCHING, AND BACKFILLING FOR UTILITIES SYSTEMS. Existing utilities shall be removed as indicated. When utility lines are encountered that are not indicated on the drawings, the Contracting Officer shall be notified prior to further work in that area.

3.3 FILLING

Holes and other hazardous openings shall be filled in accordance with Section 02300 EARTHWORK.

3.4 DISPOSITION OF MATERIAL

Title to material and equipment to be demolished, except Government salvage and historical items, is vested in the Contractor upon receipt of notice to proceed. The Government will not be responsible for the condition, loss or damage to such property after notice to proceed.

3.4.1 Salvageable Items and Material

Contractor shall salvage items and material to the maximum extent possible.

3.4.1.1 Material Salvaged for the Contractor

Material salvaged for the Contractor shall be stored as approved by the Contracting Officer and shall be removed from Government property before completion of the contract. Material salvaged for the Contractor shall not be sold on the site.

3.4.1.2 Items Salvaged for the Government

Salvaged items to remain the property of the Government shall be removed in a manner to prevent damage, and packed or crated to protect the items from damage while in storage or during shipment. Items damaged during removal or storage shall be repaired or replaced to match existing items. Containers shall be properly identified as to contents. The following items reserved as property of the Government shall be delivered to the areas designated.

3.4.1.3 Items Salvaged for the Using Service

The following items reserved as property of the using service shall be removed prior to commencement of work under this contract.

3.4.1.4 Historical Items

Historical items shall be removed in a manner to prevent damage. The following historical items shall be delivered to the Government for disposition: Corner stones, contents of corner stones, and document boxes wherever located on the site.

3.4.2 Unsalvageable Material

Concrete, masonry, and other noncombustible material, except concrete permitted to remain in place, shall be disposed-of off of Government-controlled land. Combustible material shall be disposed-of off of Government controlled land.

3.5 CLEAN UP

Debris and rubbish shall be removed from basement and similar excavations. Debris shall be removed and transported in a manner that prevents spillage on streets or adjacent areas. Local regulations regarding hauling and disposal shall apply.

3.6 PAVEMENTS

Existing pavements designated for removal shall be saw cut and removed to the limits and indicated on the drawings.

3.6.1 Existing Rigid Pavement

Where indicated on the drawings, the existing rigid pavement shall be removed and replaced. The existing rigid pavement removal shall be started with double full-depth sawcuts around the removal area as shown on the drawings. Removal shall be accomplished by approved methods, which will not damage the adjacent concrete to remain or disturb the underlying granular base course materials. Upon completion of removal operations, the face of pavement remaining shall have clean, sound, concrete exposed, and shall be essentially vertical. Any pavement beyond the limits of the removal area that is damaged by the Contractor's removal operations shall be removed and replaced by and at the Contractor's expense, using methods designated for rigid pavement removal and replacement under this contract. The removal method shall be demonstrated for approval prior to full production work.

3.6.2 Existing Flexible Pavement

Where flexible pavement removal is required on the drawings, flexible pavement removal shall be started by making a vertical sawcut at the location and depth indicated on the drawings. After completing the sawcut, the remainder of the flexible pavement removal shall be accomplished by approved methods without damaging existing flexible pavements that are to remain in place.

-- End of Section --

SECTION TABLE OF CONTENTS

DIVISION 02 - SITE WORK

SECTION 02230

CLEARING AND GRUBBING

PART 1 GENERAL

1.1 DEFINITIONS
1.1.1 Clearing
1.1.2 Grubbing
1.2 MEASUREMENT
1.3 PAYMENT
1.4 SUBMITTALS

PART 2 PRODUCTS (Not Applicable)

PART 3 EXECUTION

3.1 CLEARING
3.2 GRUBBING
3.3 TREE REMOVAL
3.4 DISPOSAL OF MATERIALS

-- End of Section Table of Contents --

SECTION 02230

CLEARING AND GRUBBING

PART 1 GENERAL

1.1 DEFINITIONS

1.1.1 Clearing

Clearing shall consist of the felling, trimming, and cutting of trees into sections and the satisfactory disposal of the trees and other vegetation designated for removal, including down timber, snags, brush, and rubbish occurring in the areas to be cleared.

1.1.2 Grubbing

Grubbing shall consist of the removal and disposal of stumps, roots larger than 3 inches in diameter, and matted roots from the designated grubbing areas.

1.2 MEASUREMENT

Clearing and grubbing work shall be measured as part of the construction work for each line item of the Pricing Schedule.

1.3 PAYMENT

Payment for clearing and grubbing shall be consider as part of the compensation for the work of each particular option year line item of the Pricing Schedule. No additional compensation shall be forthcoming for excessive clearing and grubbing or the remediation of this, or for clearing and grubbing work performed solely for the convenience of the Contractor

1.4 SUBMITTALS

Government approval is required for submittals with a "GA" designation; submittals having an "FIO" designation are for information only. The following shall be submitted in accordance with Section 01330 SUBMITTAL PROCEDURES:

SD-18 Records

Materials Other Than Salable Timber; FIO.

Written permission to dispose of such products on private property shall be filed with the Contracting Officer.

PART 2 PRODUCTS (Not Applicable)

PART 3 EXECUTION

3.1 CLEARING

Trees, stumps, roots, brush, and other vegetation in areas to be cleared

shall be cut off flush with or below the original ground surface, except such trees and vegetation as may be indicated or directed to be left standing. Trees designated to be left standing within the cleared areas shall be trimmed of dead branches 1-1/2 inches or more in diameter and shall be trimmed of all branches the heights indicated or directed. Limbs and branches to be trimmed shall be neatly cut close to the bole of the tree or main branches. Cuts more than 1-1/2 inches in diameter shall be painted with an approved tree-wound paint. Trees and vegetation to be left standing shall be protected from damage incident to clearing, grubbing, and construction operations by the erection of barriers or by such other means as the circumstances require. Clearing shall also include the removal and disposal of structures that obtrude, encroach upon, or otherwise obstruct the work.

3.2 GRUBBING

Material to be grubbed, together with logs and other organic or metallic debris not suitable for foundation purposes, shall be removed to a depth of not less than 18 inches below the original surface level of the ground in areas indicated to be grubbed and in areas indicated as construction areas under this contract, such as areas for buildings, and areas to be paved. Depressions made by grubbing shall be filled with suitable material and compacted to make the surface conform with the original adjacent surface of the ground.

3.3 TREE REMOVAL

Where indicated or directed, trees and stumps that are designated as trees shall be removed from areas outside those areas designated for clearing and grubbing. This work shall include the felling of such trees and the removal of their stumps and roots as specified in paragraph GRUBBING. Trees shall be disposed of as specified in paragraph DISPOSAL OF MATERIALS.

3.4 DISPOSAL OF MATERIALS

Logs, stumps, roots, brush, rotten wood, and other refuse from the clearing and grubbing operations, shall be disposed of in the designated waste disposal area at the Contractor's responsibility, except when otherwise directed in writing. Such directive will state the conditions covering the disposal of such products and will also state the areas in which they may be placed.

-- End of Section --

SECTION TABLE OF CONTENTS

DIVISION 02 - SITE WORK

SECTION 02300

EARTHWORK

PART 1 GENERAL

1.1 REFERENCES
1.2 MEASUREMENT
1.2.1 Common Excavation, Rock Excavation, Embankment, and Unstable Material Replacement
1.2.2 Subgrade Preparation
1.2.3 Shoulder and Ditch Work
1.2.4 Topsoil Requirements
1.3 PAYMENT
1.3.1 Common Excavation, Rock Excavation, Embankment, and Unstable Material Replacement
1.3.2 Subgrade Preparation
1.3.3 Shoulder and Ditch Reshaping
1.3.4 Classified Excavation
1.3.5 Unclassified Excavation
1.4 DEFINITIONS
1.4.1 Satisfactory Materials
1.4.1.1 Bridging Material
1.4.2 Unsatisfactory Materials
1.4.2.1 Unstable Materials
1.4.3 Degree of Compaction
1.4.4 Topsoil
1.5 SUBMITTALS
1.6 SUBSURFACE DATA
1.7 CLASSIFICATION OF EXCAVATION
1.7.1 Rock Excavation
1.7.2 Common Excavation
1.8 BLASTING
1.9 UTILIZATION OF EXCAVATED MATERIALS

PART 2 PRODUCTS (Not Applicable)

PART 3 EXECUTION

3.1 STRIPPING OF TOPSOIL
3.2 GENERAL EXCAVATION
3.2.1 Unstable Materials
3.2.2 Ditches, Gutters, and Channel Changes
3.2.3 Drainage Structures
3.3 SELECTION OF BORROW MATERIAL
3.4 OPENING AND DRAINAGE OF EXCAVATION AND BORROW PITS
3.5 BACKFILL
3.6 PREPARATION OF GROUND SURFACE FOR EMBANKMENTS
3.6.1 General Requirements

3.7 EARTH EMBANKMENTS
3.8 SUBGRADE PREPARATION
3.8.1 Construction
3.8.2 Compaction
3.8.2.1 Subgrade for Railroads
3.8.2.2 Subgrade for Pavements
3.8.2.3 Subgrade for Shoulders
3.9 SHOULDER CONSTRUCTION
3.10 FINISHING
3.11 PLACING TOPSOIL
3.12 TESTING
3.12.1 Backfill and Embankment Testing
3.12.1.1 Field Density with Moisture Content
3.12.1.2 Gradation with Atterberg Limits
3.12.1.3 Moisture-Density Relationships with Gradation, Atterberg Limits, Specific Gravity, and Classification
3.12.2 Subgrade Testing
3.12.2.1 Field Density with Moisture Content
3.12.2.2 Gradation with Atterberg Limits
3.12.2.3 Moisture-Density Relationships with Gradation, Atterberg Limits, Specific Gravity, and Classification
3.12.2.4 Tolerance Tests for Subgrades
3.13 SUBGRADE AND EMBANKMENT PROTECTION
3.14 CONSTRUCTION QUALITY CONTROL

-- End of Section Table of Contents --

SECTION 02300

EARTHWORK

PART 1 GENERAL

1.1 REFERENCES

The publications listed below form a part of this specification to the extent referenced. The publications are referred to in the text by basic designation only.

AMERICAN SOCIETY FOR TESTING AND MATERIALS (ASTM)

ASTM C 136	(1996) Sieve Analysis of Fine and Coarse Aggregates
ASTM D 1140	(1992) Amount of Material in Soils Finer than the No. 200 (75-micrometer) Sieve
ASTM D 1556	(1990; R 1996) Density and Unit Weight of Soil in Place by the Sand-Cone Method
ASTM D 1557	(1991) Laboratory Compaction Characteristics of Soil Using Modified Effort (56,000 ft-lbf/cu. ft. (2,700 kN-m/cu. m.))
ASTM D 2216	(1992) Laboratory Determination of Water (Moisture) Content of Soil and Rock
ASTM D 2487	(1993) Classification of Soils for Engineering Purposes (Unified Soil Classification System)
ASTM D 2922	(1996) Density of Soil and Soil-Aggregate in Place by Nuclear Methods (Shallow Depth)
ASTM D 3017	(1988; R 1993) Water Content of Soil and Rock in Place by Nuclear Methods (Shallow Depth)
ASTM D 3740	(1996) Minimum Requirements for Agencies Engaged in the Testing and/or Inspection of Soil and Rock as Used in Engineering Design and Construction
ASTM D 4318	(1995a) Liquid Limit, Plastic Limit, and Plasticity Index of Soils
ASTM D 5255	(1992)Certification of Personnel Engaged in the Testing of Soil and Rock
ASTM D 5268	(1992; R 1996) Topsoil Used for

	Landscaping Purposes
ASTM E 329	(1990) Evaluation of Testing and Inspection Agencies as Used in Construction

DEPARTMENT OF THE ARMY, CORPS OF ENGINEERS

EM 385-1-1	Safety and Health Requirements Manual
CESPK PAM 415-1-2	Construction Control Manual

1.2 MEASUREMENT

1.2.1 Common Excavation, Rock Excavation, Embankment, and Unstable Material Replacement

The unit of measurement for common excavation, rock excavation, and embankment, and unstable material replacement will be the cubic yard, computed by the average end area method from cross sections taken before and after the excavation, fill, and replacement operations. The volume of excavation to be paid for will be the number of cubic yards of material measured in its original position and removed from the excavation and borrow areas, including the excavation of ditches, gutters, and channel changes, when the material is acceptably utilized for embankment construction or disposed of as herein specified. The measurements will include authorized excavation of rock, authorized excavation of unsatisfactory and unstable subgrade soil, and the volume of loose, scattered rocks and boulders collected within the limits of the work; allowance will be made on the same basis for satisfactory material and bridging material ordered as replacement material. The measurement will not include the volume of subgrade material or other material that is scarified or plowed and reused in-place, and will not include the volume excavated without authorization or the volume of any material used for purposes other than directed. The volume of overburden stripped from borrow pits and the volume of excavation for ditches to drain borrow pits, unless used as borrow material, will not be measured for payment. The measurement will not include the volume of any excavation performed prior to the taking of elevations and measurements of the undisturbed grade.

1.2.2 Subgrade Preparation

Subgrade preparation shall be measured as the number of square yards of subgrade preparation performed to a depth of 6 inches.

1.2.3 Shoulder and Ditch Work

Measurement for shoulder reshaping and ditch work shall be the number of linear feet of shoulder and ditch reshaped and accepted.

1.2.4 Topsoil Requirements

Separate excavation, hauling, and spreading or piling of topsoil and related miscellaneous operations will be considered subsidiary obligations of the Contractor, covered under the contract unit price for excavation.

1.3 PAYMENT

1.3.1 Common Excavation, Rock Excavation, Embankment, and Unstable Material Replacement

Payment will constitute full compensation for all labor, equipment, tools, supplies, and incidentals necessary to complete the work for the base year Line Items 0021AA, "COMMON EXCAVATION"; 0021AB, "ROCK EXCAVATION"; 0022AA, "SOIL EMBANKMENT"; 0023AA, "EXCAVATION OF UNSUITABLE MATERIAL"; 0023AB, "HAULING OF UNSUITABLE MATERIAL"; and 0023AC, "LANDFILL DISPOSAL" of the Pricing Schedule.

1.3.2 Subgrade Preparation

Subgrade preparation shall paid fro under base year Line Items 0001AO and 0003AD, SUBGRADE PREP ASSUME 6" THICK" and as part of the incidental work of base year Line Item 0002, "PATCHING EXISTING ASPHALT" of the Pricing Schedule.

1.3.3 Shoulder and Ditch Reshaping

Payment for shoulder and ditch reshaping shall be under the base year Line Items 0010AA, "SHOULDERS" and 0010AB, "DITCHES" of the Pricing Schedule.

1.3.4 Classified Excavation

Classified excavation will be paid for at the contract unit prices per cubic yard for common or rock excavation.

1.3.5 Unclassified Excavation

Unclassified excavation will be paid for at the contract unit price per cubic yard for unclassified excavation.

1.4 DEFINITIONS

1.4.1 Satisfactory Materials

Satisfactory materials for grading operations shall comprise materials classified by ASTM D 2487 as GP, GM, GP-GM, GC, GP-GC, GM-GC, SW, SP, SM, SW-SM, SC, SW-SC, SP-SM, SP-SC, and CL. Satisfactory materials for grading shall have a maximum particle size of 2 inches in any dimension. The portion passing the No. 40 standard sieve shall have a liquid limit of no greater than 35 when tested in accordance with ASTM D 4318.

1.4.1.1 Bridging Material

Bridging material is satisfactory for remediation of unstable soil conditions where directed. Bridging material shall consist of hard and angular crushed rock and sand particles classified by ASTM D 2487 as GW or GP with a maximum particle size of 3 inches. Compensation for bridging material shall be based on the ability of the material to successfully bridge unstable materials, i.e., the surface shall no longer rutt and shove under the wheels of construction equipment. No compensation shall be forthcoming for material that becomes part of the unstable matrix.

1.4.2 Unsatisfactory Materials

Materials which do not comply with the requirements for satisfactory materials are unsatisfactory. Unsatisfactory materials also include trash; refuse; and material classified as satisfactory which contains root and other organic matter or unstable material. Additionally, fills and backfills of otherwise satisfactory materials from previous construction

are unsatisfactory until compacted to the densities specified herein. Any materials that will not readily compact to the densities specified herein are unsatisfactory. The Contracting Officer shall be notified of any contaminated materials.

1.4.2.1 Unstable Materials

Materials that rut or shove under the wheels of construction equipment due to excessive moisture are unstable and unsatisfactory. Potentially unstable materials are fine grained soils with moisture contents near or above the plastic limit or 5 or more percent above the ASTM D 1557 optimum water content. Unstable material may be encountered at sites during construction. Unstable material will require disking and drying and/or replacement and disposal.

1.4.3 Degree of Compaction

Degree of compaction required is expressed as a percentage of the maximum dry density obtained by the test procedure presented in ASTM D 1557 Procedure C abbreviated herein as the percent of laboratory maximum dry density.

1.4.4 Topsoil

Material suitable for planting and revegetation obtained from offsite areas and meeting the percentages outlined in Table 1 of ASTM D 5268 is defined as topsoil.

1.5 SUBMITTALS

Government approval is required for submittals with a "GA" designation; submittals having an "FIO" designation are for information only. The following shall be submitted in accordance with Section 01330 SUBMITTAL PROCEDURES:

SD-08 Statements

Earthwork; GA.

Procedure and location for disposal of unused satisfactory material. Proposed source of borrow material and bridging material.

SD-09 Reports

Testing; FIO.

Within 24 hours of conclusion of physical tests, 2 copies of test results, including calibration curves and results of calibration tests. Information shall be submitted on a "Density Test Log" which shall include but not be limited to the following: test date, test number, feature of work, station/location, offset, elevation, in place dry unit weight, moisture content, percent compaction, pass or fail, test method, and soil classification.

SD-13 Certificates

Testing; FIO.

Qualifications of the commercial testing laboratory or Contractor's testing

facilities in accordance with ASTM D 3740 and ASTM E 329. Qualifications of testing personnel in accordance with ASTM D 5255.

SD-18 Records

Earthwork; GA.

Notification of encountering rock in the project. Advance notice on the opening of excavation or borrow areas. Advance notice on shoulder construction for rigid pavements.

1.6 SUBSURFACE DATA

Subsurface soil boring logs are shown on the drawings. These data represent the best subsurface information available; however, variations may exist in the subsurface between exploration locations.

1.7 CLASSIFICATION OF EXCAVATION

Excavation specified shall be done on a classified basis, in accordance with the following designations and classifications.

1.7.1 Rock Excavation

Rock excavation shall include excavating, grading, and disposing of material classified as rock and shall include the satisfactory removal and disposal of boulders 1/2 cubic yard or more in volume; solid rock; rock material that is in ledges, bedded deposits, and unstratified masses, which cannot be removed without systematic drilling and fracturing; and firmly cemented conglomerate deposits possessing the characteristics of solid rock impossible to remove without systematic drilling and fracturing. The removal of any concrete or masonry structures, except pavements, exceeding 1/2 cubic yard in volume that may be encountered in the work shall be included in this classification. If at any time during excavation, the Contractor encounters material that may be classified as rock excavation, such material shall be uncovered and the Contracting Officer notified by the Contractor. The Contractor shall not proceed with the excavation of this material until the Contracting Officer has classified the materials as common excavation or rock excavation and has taken cross sections as required. Failure on the part of the Contractor to uncover such material, notify the Contracting Officer, and allow ample time for classification and cross sectioning of the undisturbed surface of such material will cause the forfeiture of the Contractor's right of claim to any classification or volume of material to be paid for other than that allowed by the Contracting Officer for the areas of work in which such deposits occur.

1.7.2 Common Excavation

Common excavation shall include the satisfactory removal and disposal of all materials not classified as rock excavation.

1.8 BLASTING

Blasting will not be permitted.

1.9 UTILIZATION OF EXCAVATED MATERIALS

Unsatisfactory materials removed from excavations shall be disposed-of off of Government-controlled land unless otherwise directed. Satisfactory

material removed from excavations shall be used, insofar as practicable, in the construction of fills, embankments, subgrades, shoulders, bedding (as backfill), and for similar purposes. No satisfactory excavated material shall be wasted without specific written authorization. Satisfactory material authorized to be wasted shall be disposed of in designated areas approved for surplus material storage or designated waste areas as directed. Newly designated waste areas on Government-controlled land shall be cleared and grubbed before disposal of waste material thereon. Coarse rock from excavations shall be stockpiled and used for constructing slopes or embankments adjacent to streams, or sides and bottoms of channels and for protecting against erosion. No excavated material shall be disposed of to obstruct the flow of any drainage channel, endanger a partly finished structure, impair the efficiency or appearance of any structure, or be detrimental to the completed work in any way.

PART 2 PRODUCTS (Not Applicable)

PART 3 EXECUTION

3.1 STRIPPING OF TOPSOIL

Where indicated or directed, materials that meet the requirements outlined in Table 1 of ASTM D 5268 shall be stripped to a depth of 6 inches. Topsoil shall be spread on areas already graded and prepared for topsoil, or transported and deposited in stockpiles convenient to areas that are to receive application of the topsoil later, or at locations indicated or specified. Topsoil shall be kept separate from other excavated materials, brush, litter, vegetation, roots, stones larger than 2 inches in diameter, and other materials that would interfere with planting and maintenance operations. Any surplus of topsoil from excavations and grading shall be stockpiled in the locations shown on the Task Order or removed from the site.

3.2 GENERAL EXCAVATION

The Contractor shall perform excavation of every type of material encountered within the limits of the project to the lines, grades, and elevations indicated and as specified. Deep excavation shall be conducted in conformance with the safety requirements of Section 25 of EM 385-1-1. Grading shall be in conformity with the typical sections shown and the tolerances specified in paragraph FINISHING. Satisfactory excavated materials shall be transported to and placed in fill or embankment within the limits of the work. Unsatisfactory materials and rock encountered within the limits of the work shall be excavated below grade and replaced with satisfactory materials as directed. Such excavated material and the satisfactory material ordered as replacement shall be included in excavation. Surplus satisfactory excavated material not required for fill or embankment shall be disposed of in areas approved for surplus material storage or designated waste areas. Unsatisfactory excavated material shall be disposed-of off Government-controlled land. During construction, excavation and fill shall be performed in a manner and sequence that will provide proper drainage at all times. Material required for fill or embankment in excess of that produced by excavation within the grading limits shall be excavated from borrow areas.

3.2.1 Unstable Materials

The Contracting Officer will be notified when unstable materials are encountered so that measurements can be taken and excavation quantities agreed to. No additional compensation shall be forthcoming for excavation or overexcavation performed without the knowledge and authorization of the Contracting Officer. No additional compensation shall be forthcoming for the excavation, overexcavation, and replacement of material rendered unstable by Contractor managed operations.

3.2.2 Ditches, Gutters, and Channel Changes

Excavation of ditches, gutters, and channel changes shall be accomplished by cutting accurately to the cross sections, grades, and elevations shown. Ditches and gutters shall not be excavated below grades shown. Excessive open ditch or gutter excavation shall be backfilled with satisfactory, thoroughly compacted, material or with suitable stone or cobble to grades shown. Material excavated shall be disposed of as shown or as directed, except that in no case shall material be deposited less than 4 feet from the edge of a ditch. The Contractor shall maintain excavations free from detrimental quantities of leaves, brush, sticks, trash, and other debris until final acceptance of the work.

3.2.3 Drainage Structures

Excavations shall be made to the lines, grades, and elevations shown, or as directed. Trenches and foundation pits shall be of sufficient size to permit the placement and removal of forms for the full length and width of structure footings and foundations as shown. Rock or other hard foundation material shall be cleaned of loose debris and cut to a firm, level, stepped, or serrated surface. Loose disintegrated rock and thin strata shall be removed. When concrete or masonry is to be placed in an excavated area, the bottom of the excavation shall not be disturbed. Excavation to the final grade level shall not be made until just before the concrete or masonry is to be placed.

3.3 SELECTION OF BORROW MATERIAL

With the exception of topsoil, all borrow material shall meet the requirements for satisfactory material and be selected to meet the requirements and conditions of the particular fill or embankment for which it is to be used. Borrow material shall be obtained from approved sources selected by the Contractor. Unless otherwise provided in the contract, the Contractor shall obtain from the owners the right to procure material, pay royalties and other charges involved, and bear the expense of developing the sources, including rights-of-way for hauling. Borrow material from approved sources on Government-controlled land may be obtained without payment of royalties. Unless specifically provided, no borrow shall be obtained within the limits of the project site without prior written approval. Necessary clearing, grubbing, and satisfactory drainage of borrow pits and the disposal of debris thereon shall be considered related operations to the borrow excavation.

3.4 OPENING AND DRAINAGE OF EXCAVATION AND BORROW PITS

The Contractor shall notify the Contracting Officer sufficiently in advance of the opening of any excavation or borrow pit to permit elevations and measurements of the undisturbed ground surface to be taken. Except as otherwise permitted, borrow pits and other excavation areas shall be excavated providing adequate drainage. Overburden and other spoil material shall be transported to designated spoil areas or otherwise disposed of as

directed. Borrow pits shall be neatly trimmed and drained after the excavation is completed. The Contractor shall ensure that excavation of any area, operation of borrow pits, or dumping of spoil material results in minimum detrimental effects on natural environmental conditions.

3.5 BACKFILL

Backfill adjacent to any and all types of structures shall be placed and compacted to at least 95 percent laboratory maximum dry density. Materials shall be placed and compacted in such a manner as to prevent wedging action or eccentric loading upon or against the structure. Ground surface on which backfill is to be placed shall be prepared as specified in paragraph PREPARATION OF GROUND SURFACE FOR EMBANKMENTS. Compaction requirements for backfill materials shall also conform to the applicable portions of paragraphs PREPARATION OF GROUND SURFACE FOR EMBANKMENTS, EMBANKMENTS, and SUBGRADE PREPARATION, and Section 02316 EXCAVATION, TRENCHING, AND BACKFILLING FOR UTILITIES SYSTEMS. Compaction shall be accomplished by sheepsfoot rollers, pneumatic-tired rollers, steel-wheeled rollers, vibratory compactors, or other equipment well suited to compact the materials encountered.

3.6 PREPARATION OF GROUND SURFACE FOR EMBANKMENTS

3.6.1 General Requirements

Ground surface on which fill is to be placed shall be stripped of live, dead, or decayed vegetation, rubbish, debris, and other unsatisfactory material; plowed, disked, or otherwise broken up to a depth of 12 inches (unless otherwise shown on the Task Order); pulverized; moistened or aerated as necessary; thoroughly mixed; and compacted to at least 95 percent of the laboratory maximum dry density. Compaction shall be accomplished by sheepsfoot rollers, pneumatic-tired rollers, steel-wheeled rollers, vibratory compactors, or other equipment well suited to compact the materials encountered. The prepared ground surface shall be scarified and moistened or aerated as required just prior to placement of embankment materials to assure adequate bond between embankment material and the prepared ground surface.

3.7 EARTH EMBANKMENTS

Earth embankments shall be constructed from satisfactory materials free of organic or frozen material and rocks with any dimension greater than 3 inches. The material shall be placed in successive horizontal layers of loose material not more than 8 inches in depth. Each layer shall be spread uniformly on a soil surface that has been moistened or aerated as necessary, and scarified or otherwise broken up so that the fill will bond with the surface on which it is placed. After spreading, each layer shall be plowed, disked, or otherwise broken up; moistened or aerated as necessary; thoroughly mixed; and compacted to at least 95 percent laboratory maximum dry density. Compaction requirements for the upper portion of earth embankments forming subgrade for pavements shall be identical with those requirements specified in paragraph SUBGRADE PREPARATION. Compaction shall be accomplished by sheepsfoot rollers, pneumatic-tired rollers, steel-wheeled rollers, vibratory compactors, or other equipment well suited to the soil materials being compacted.

3.8 SUBGRADE PREPARATION

3.8.1 Construction

Subgrade shall be shaped to line, grade, and cross section, and compacted as specified. This operation shall include plowing, disking, and any moistening or aerating required to obtain specified compaction. Soft or otherwise unsatisfactory material shall be removed and replaced with satisfactory excavated material or other approved material as directed. Rock encountered in the cut section shall be excavated to a depth of 6 inches below finished grade for the subgrade. Low areas resulting from removal of unsatisfactory material or excavation of rock shall be brought up to required grade with satisfactory materials, and the entire subgrade shall be shaped to line, grade, and cross section and compacted as specified. After rolling, the surface of the subgrade for roadways shall not show deviations greater than 1/2 inch when tested with a 12-foot straightedge applied both parallel and at right angles to the centerline of the area. The elevation of the finish subgrade shall not vary more than 0.05-foot from the established grade and cross section.

3.8.2 Compaction

Compaction shall be accomplished by sheepsfoot rollers, pneumatic-tired rollers, steel-wheeled rollers, vibratory compactors, or other equipment well suited to the soil materials being compacted. Except for paved areas and railroads, each layer of the embankment shall be compacted to at least 95 percent of the laboratory maximum dry density. Compaction shall be performed on materials that are within 2 percent of the optimum water content.

3.8.2.1 Subgrade for Railroads

Subgrade for railroads shall be compacted to at least 95 percent of the laboratory maximum dry density. Compaction shall be performed on materials that are within 2 percent of the optimum water content.

3.8.2.2 Subgrade for Pavements

Subgrade for pavements shall be compacted to at least 95 percent of the laboratory maximum dry density for the depth below the surface of the pavement shown. When more than one soil classification is present in the subgrade, the top 6 inches of subgrade shall be scarified, windrowed, thoroughly blended, reshaped, and compacted. Compaction shall be performed on materials that are within 2 percent of the optimum water content.

3.8.2.3 Subgrade for Shoulders

Subgrade for shoulders shall be compacted to at least 95 percent of the laboratory maximum dry density for the depth below the surface of shoulder shown. Compaction shall be performed on materials that are within 2 percent of the optimum water content.

3.9 SHOULDER CONSTRUCTION

Shoulders shall be constructed of satisfactory excavated material or borrow material. Shoulders shall be constructed as soon as possible after adjacent paving is complete, but in the case of rigid pavements, shoulders shall not be constructed until permission of the Contracting Officer has been obtained. The entire shoulder area shall be compacted to at least the percentage of maximum density as specified in paragraph SUBGRADE PREPARATION above, for specific ranges of depth below the surface of the shoulder. Compaction shall be accomplished by sheepsfoot rollers,

pneumatic-tired rollers, steel-wheeled rollers, vibratory compactors, or other equipment well suited to compact the soil materials being placed. Shoulder construction shall be done in proper sequence in such a manner that adjacent ditches will be drained effectively and that no damage of any kind is done to the adjacent completed pavement. The completed shoulders shall be true to alignment and grade and shaped to drain in conformity with the cross section shown.

3.10 FINISHING

The surface of excavations, embankments, and subgrades shall be finished to a smooth and compact surface in accordance with the lines, grades, and cross sections or elevations shown. The degree of finish for graded areas shall be within 0.1 foot of the grades and elevations indicated except that the degree of finish for subgrades shall be specified in paragraph SUBGRADE PREPARATION. Gutters and ditches shall be finished in a manner that will result in effective drainage. The surface of areas to be turfed shall be finished to a smoothness suitable for the application of turfing materials.

3.11 PLACING TOPSOIL

On areas to receive topsoil, the compacted subgrade soil shall be scarified to a 2-inch depth for bonding of topsoil with subsoil. Topsoil then shall be spread evenly to a thickness of 6 inches and graded to the elevations and slopes shown. Topsoil shall not be spread when frozen or excessively wet or dry. Material required for topsoil in excess of that produced by excavation within the grading limits shall be obtained from offsite borrow areas.

3.12 TESTING

Testing shall be performed by an approved commercial testing laboratory or by the Contractor subject to approval. If the Contractor elects to establish testing facilities, no work requiring testing will be permitted until the Contractor's facilities have been inspected and approved by the Contracting Officer. The first inspection will be at the expense of the Government. Cost incurred for any subsequent inspections required because of failure of the first inspection will be charged to the Contractor. Field in-place density shall be determined in accordance with ASTM D 1556 and ASTM D 2922. When ASTM D 2922 is used, the Contractor shall obtain all necessary permits and authorizations for the use of the nuclear gage. When ASTM D 2922 is used, the calibration curves shall be checked and adjusted using only the sand cone method as described in ASTM D 1556. ASTM D 2922 results in a wet unit weight of soil and when using this method ASTM D 3017 shall be used to determine the moisture content of the soil. The calibration curves furnished with the moisture gauges shall also be checked along with density calibration checks as described in ASTM D 3017; the calibration checks of both the density and moisture gauges shall be made at the beginning of a job and on each different type of material encountered, and at intervals to provide at least one check for each set of five nuclear tests. When test results indicate, as determined by the Contracting Officer, that compaction is not as specified, the material shall be removed, replaced and recompacted to meet specification requirements. Tests on recompacted areas shall be performed to determine conformance with specification requirements. Inspections and test results shall be certified by a registered professional civil engineer. These certifications shall state that the tests and observations were performed by or under the direct supervision of the engineer and that the results are representative of the materials or conditions being certified by the tests.

The following number of tests are in conformance with CESPK PAM 415-1-2, the Construction Control Manual. Testing, if performed at the appropriate time, will be the minimum acceptable for each type operation.

3.12.1 Backfill and Embankment Testing

3.12.1.1 Field Density with Moisture Content

a. Two tests per lift for each increment or fraction of 2000 square yards, placed during each 8 hour shift for areas compacted by other than hand-operated machines. Water contents shall be determined by the test method outlined in ASTM D 2216.

b. One random test at each location, of each lift of fill or backfill areas compacted by hand-operated machines.

3.12.1.2 Gradation with Atterberg Limits

One test for every five in-place density tests. From compacted material, the gradation of fill and backfill material shall be determined in accordance with ASTM C 136 and ASTM D 1140, as applicable. Atterberg limits shall be determined in accordance with the test method outlined in ASTM D 4318.

3.12.1.3 Moisture-Density Relationships with Gradation, Atterberg Limits, Specific Gravity, and Classification

One test for every five field density tests, with not less than one for each type of material.

3.12.2 Subgrade Testing

3.12.2.1 Field Density with Moisture Content

a. Two tests per lift for each increment or fraction of 1000 square yards, placed during each 8 hour shift for areas compacted by other than hand-operated machines.

b. One random test at each location, of each lift of fill or backfill areas compacted by hand-operated machines.

3.12.2.2 Gradation with Atterberg Limits

Two tests for every five in-place density tests. From compacted material, the gradation of fill and backfill material shall be determined in accordance with ASTM C 136 and ASTM D 1140, as applicable. Atterberg limits shall be determined in accordance with the test method outlined in ASTM D 4318.

3.12.2.3 Moisture-Density Relationships with Gradation, Atterberg Limits, Specific Gravity, and Classification

One test for every five field density tests, with not less than one for each type of material.

3.12.2.4 Tolerance Tests for Subgrades

Checks on the degree of finish specified in paragraph SUBGRADE PREPARATION shall be made at the edges and centerlines of subgrade areas, in both the

longitudinal and transverse directions, at 50-foot intervals during construction of the subgrades.

3.13 SUBGRADE AND EMBANKMENT PROTECTION

During construction, embankments and excavations shall be kept shaped and drained. Ditches and drains along subgrade shall be maintained to drain effectively at all times. The finished subgrade shall not be disturbed by traffic or other operations and shall be protected and maintained by the Contractor in a satisfactory condition until ballast, subbase, base, or pavement is placed. The storage or stockpiling of materials on the finished subgrade will not be permitted. No subbase, base course, ballast, or pavement shall be laid until the subgrade has been checked and approved, and in no case shall subbase, base, surfacing, pavement, or ballast be placed on a unstable subgrade.

3.14 CONSTRUCTION QUALITY CONTROL

Attention is directed to the applicable sections which requires the Contractor to perform quality control inspection, testing, and reporting.

-- End of Section --

SECTION TABLE OF CONTENTS

DIVISION 02 - SITE WORK

SECTION 02316

EXCAVATION, TRENCHING, AND BACKFILLING FOR UTILITIES SYSTEMS

PART 1 GENERAL

1.1 REFERENCES
1.2 MEASUREMENT AND PAYMENT
1.2.1 Rock Excavation
1.2.2 Shielding and Bracing
1.2.3 Select Granular Material
1.2.4 Excavation, Hauling, and Disposal of Unsuitable Material
1.3 DEGREE OF COMPACTION
1.4 SUBMITTALS

PART 2 PRODUCTS

2.1 MATERIALS
2.1.1 Satisfactory Materials
2.1.2 Unsatisfactory Materials
2.1.2.1 Unstable Materials
2.1.3 Rock
2.1.4 Unyielding Material
2.1.5 Foundations
2.1.6 Initial Backfill Material
2.1.6.1 Select Granular Material
2.2 PLASTIC MARKING TAPE

PART 3 EXECUTION

3.1 EXCAVATION
3.1.1 Trench Excavation Requirements
3.1.1.1 Bottom Preparation
3.1.1.2 Removal of Unyielding Material
3.1.1.3 Removal of Unstable Material
3.1.1.4 Excavation for Appurtenances
3.1.1.5 Jacking, Boring, and Tunneling
3.1.2 Stockpiles
3.2 BACKFILLING AND COMPACTION
3.2.1 Trench Backfill
3.2.1.1 Replacement of Unyielding Material
3.2.1.2 Replacement of Unstable Material
3.2.1.3 Initial Backfill
3.2.1.4 Final Backfill
3.2.2 Backfill for Appurtenances
3.3 SPECIAL REQUIREMENTS
3.3.1 Water Lines
3.3.2 Electrical Distribution System
3.3.3 Plastic Marking Tape
3.4 TESTING

3.4.1 In-Place Densities
3.4.2 Moisture-Density Relationships
3.4.3 Gradation, Atterberg Limits, and Classification
3.4.4 Miscellaneous Testing
3.4.5 Testing Schedule
3.4.6 Displacement of Sewers

-- End of Section Table of Contents --

SECTION 02316

EXCAVATION, TRENCHING, AND BACKFILLING FOR UTILITIES SYSTEMS

PART 1 GENERAL

1.1 REFERENCES

The publications listed below form a part of this specification to the extent referenced. The publications are referred to in the text by basic designation only.

AMERICAN SOCIETY FOR TESTING AND MATERIALS (ASTM)

ASTM C 33	(1993) Concrete Aggregates
ASTM C 136	(1996a) Sieve Analysis of Fine and Coarse Aggregates
ASTM D 422	(1963; R 1990) Particle-Size Analysis of Soils
ASTM D 1556	(1990; R 1996) Density and Unit Weight of Soil in Place by the Sand-Cone Method
ASTM D 1557	(1991) Laboratory Compaction Characteristics of Soil Using Modified Effort (56,000 ft-lbf/cu. ft. (2,700 kN-m/cu. m.))
ASTM D 2216	(1992) Laboratory Determination of Water (Moisture) Content of Soil, and Rock
ASTM D 2487	(1993) Classification of Soils for Engineering Purposes (Unified Soil Classification System
ASTM D 2922	(1996) Density of Soil and Soil-Aggregate in Place by Nuclear Methods (Shallow Depth)
ASTM D 3017	(1996) Water Content of Soil and Rock in Place by Nuclear Methods (Shallow Depth)
ASTM D 3740	(1996) Minimum Requirements for Agencies Engaged in the Testing and/or Inspection of Soil and Rock as Used in Engineering Design and Construction
ASTM D 5255	(1992)Certification of Personnel Engaged in the Testing of Soil and Rock
ASTM E 329	(1990) Evaluation of Testing and Inspection Agencies as Used in Construction

DEPARTMENT OF THE ARMY, CORPS OF ENGINEERS

EM 385-1-1	Safety and Health Requirements Manual
CESPK PAM 415-1-2	Construction Control Manual

1.2 MEASUREMENT AND PAYMENT

Measurement and payment for excavation, trenching, and backfilling shall be considered as part of the compensation for completed work performed for the base year Line Item Headings: 0013, "FLARED METAL HEADWALLS-INCLUDES INGRESS AND EGRESS"; 0016, "REMOVE/REPLACE CULVERTS"; and 0017, "INSTALL NEW CULVERTS". Compensation for the plastic marking tape specified herein shall be considered as part of the per linear foot price of conduit installation.

1.2.1 Rock Excavation

Rock excavation shall be measured and paid for by the number of cubic yards of acceptably excavated rock material. The material shall be measured in place, but volume shall be based on a maximum 20 inches for pipes 12 inches in diameter or less, and a maximum width of 12 inches greater than the outside diameter of the pipe for pipes over 12 inches in diameter. The measurement shall include all authorized overdepth rock excavation as determined by the Contracting Officer. For manholes and other appurtenances, volumes of rock excavation shall be computed on the basis of 1 foot outside of the wall lines of the structures. Payment for rock excavation will be made in addition to the price bid for the the base year Line Item 0021AB, "ROCK EXCAVATION" of Pricing Schedule, and will include all necessary drilling and fracturing and all incidentals necessary to excavate and dispose of the rock.

1.2.2 Shielding and Bracing

No additional compensation shall be forthcoming for any required shielding and bracing. Shielding and bracing shall be considered as part of the work to be performed.

1.2.3 Select Granular Material

Select granular material shall be measured in place as the actual cubic yards replacing wet or unstable material in trench bottoms within the limits shown and in authorized overdepth areas. The unit price shall include furnishing and placing the granular material, excavation and disposal of unsatisfactory material, and additional requirements for sheeting and bracing, pumping, bailing, cleaning, and other incidentals necessary to complete the work. Payment for select granular material will be made under the base year Line Item 0018, "SELECT FILL MATERIAL" of the Pricing Schedule.

1.2.4 Excavation, Hauling, and Disposal of Unsuitable Material

Payment for excavation, hauling, and disposal of unsuitable materials will be made under the base year Line Items; 0023AA, "EXCAVATION OF UNSUITABLE MATERIAL" 0023AB, "HAULING OF UNSUITABLE MATERIAL" and 0023AC, "LANDFILL DISPOSAL" of the Pricing Schedule.

1.3 DEGREE OF COMPACTION

Degree of compaction shall be expressed as a percentage of the maximum dry density obtained by the test procedure presented in ASTM D 1557 Procedure C.

1.4 SUBMITTALS

Government approval is required for submittals with a "GA" designation; submittals having an "FIO" designation are for information only. The following shall be submitted in accordance with Section 01330 SUBMITTAL PROCEDURES:

SD-09 Reports

Field Density Tests; FIO. Testing of Backfill Materials; FIO.

Copies of all laboratory and field test reports within 24 hours of the completion of the test.

PART 2 PRODUCTS

2.1 MATERIALS

2.1.1 Satisfactory Materials

Satisfactory materials shall comprise any materials classified by ASTM D 2487 as GW, GP, GM, GP-GM, GW-GM, GC, GP-GC, GM-GC, SW, SP, SM, SW-SM, SC, SW-SC, SP-SM, SP-SC, and CL. Materials shall be free from roots and other organic matter, trash, debris, and frozen materials and stones larger than 2 inches. The portion passing the No. 40 standard sieve shall have a liquid limit of no greater than 35 when tested in accordance with ASTM D 4318.

2.1.2 Unsatisfactory Materials

Materials which do not comply with the requirements for satisfactory materials are unsatisfactory. Man-made fills and backfills of otherwise satisfactory materials from previous construction are unsatisfactory until compacted to the densities specified herein. Any materials that will not readily compact to the densities specified herein are unstable and unsatisfactory. The Contracting Officer shall be notified of any contaminated materials.

2.1.2.1 Unstable Materials

Materials that cannot be properly compacted or will not support construction equipment or conduits and their appurtenances due to excessive moisture are unstable. Potentially unstable materials are fine grained soils with moisture contents near or above the plastic limit or 5 or more percent above the ASTM D 1557 optimum water content. Unstable materials are also indicated by waving, rutting, and shoving under the wheels and rollers of construction equipment. Unstable material may be encountered at this site during construction. Unstable conditions in excavations shall be mitigated as specified herein after.

2.1.3 Rock

Rock shall consist of boulders measuring 1/2 cubic yard or more and materials that cannot be removed without systematic drilling and fracturing such as rock material in ledges, bedded deposits, unstratified masses and conglomerate deposits, and below ground concrete or masonry structures,

exceeding 1/2 cubic yard in volume, except that pavements shall not be considered as rock.

2.1.4 Unyielding Material

Unyielding material shall consist of cemented gravel and cobble soils which require large tracked equipment for excavation. No additional compensation shall be forthcoming for unyielding material excavation.

2.1.5 Foundations

The Contractor is notified that remnants of existing subgrade footings may exist at the site and no additional compensation shall be forthcoming for any additional effort required for the removal and disposal of these.

2.1.6 Initial Backfill Material

Initial backfill material shall consist of the material specified by the conduit or coating manufacturer for the particular trench configuration and loading condition. Where conflicts in specifications exist, the better material or alternative shall be utilized. In the absence of a conduit or coating manufacturer's specifications, initial backfill shall consist of satisfactory material. Select granular material shall be used for bridging upon notification of the Contracting Officer of unstable conditions.

2.1.6.1 Select Granular Material

Select granular material shall consist of sands, gravels, crushed gravel, or crushed stone composed of hard, tough and durable particles. Select granular material shall be graded in accordance with the ASTM C 33 gradation for size 67 concrete coarse aggregate.

2.2 PLASTIC MARKING TAPE

Plastic marking tape shall be acid and alkali-resistant polyethylene film, 6 inches wide with minimum thickness of 0.004 inch. Tape shall have a minimum strength of 1750 psi lengthwise and 1500 psi crosswise. The tape shall be manufactured with integral wires, foil backing or other means to enable detection by a metal detector when the tape is buried up to 3 feet deep. The tape shall be of a type specifically manufactured for marking and locating underground utilities. The metallic core of the tape shall be encased in a protective jacket or provided with other means to protect it from corrosion. Tape color shall be as specified in TABLE 1 and shall bear a continuous printed inscription describing the specific utility.

TABLE 1. Tape Color

Red:	Electric
Yellow:	Gas, Oil, Dangerous Materials
Orange:	Telephone, Telegraph, Television, Police, and Fire Communications
Blue:	Water Systems
Green:	Sewer Systems

PART 3 EXECUTION

3.1 EXCAVATION

Excavation shall be performed to the lines and grades indicated.

Excavations shall be made in compliance with the safety requirements of Section 25 of EM 385-1-1. Rock excavation shall include removal and disposition of material defined as rock in paragraph MATERIALS. Earth excavation shall include removal and disposal of material not classified as rock excavation. During excavation, material satisfactory for backfilling shall be stockpiled in an orderly manner at a distance from the banks of the trench equal to the depth of the excavation, but in no instance closer than 3 feet. Excavated material not required or not satisfactory for backfill shall be removed from the site and disposed-of off of Government-controlled land. Grading shall be done as may be necessary to prevent surface water from flowing into the excavation, and any water accumulating shall be removed to maintain the stability of the bottom and sides of the excavation. No additional compensation shall be forthcoming for the excavation and replacement of materials from unauthorized overexcavation or materials rendered unsatisfactory by Contractor managed operations.

No additional compensation shall be forthcoming for material excavation and replacement due to the Contractor's failure to protect, drain, or dewater the project site. A change in the Contract price shall be considered for incidents where unsatisfactory materials are encountered at depths and locations that are in conflict with the Contract Exploration Logs. Overexcavation shall be backfilled in accordance with paragraph BACKFILLING AND COMPACTION.

3.1.1 Trench Excavation Requirements

The trench shall be excavated as recommended by the manufacturer of the pipe to be installed. Trench walls below the top of the pipe shall be sloped, or made vertical, and of such width as recommended in the manufacturer's installation manual. Where no manufacturer's installation manual is available, trench walls shall be made vertical. Trench walls more than 5 feet high shall be shored, cut back to a stable slope, or provided with equivalent means of protection for employees who may be exposed to moving ground or cave in. Vertical trench walls more than 5 feet high shall be shored in accordance with EM 385-1-1. Trench walls which are cut back shall be excavated to at least the angle of repose of the soil. Special attention shall be given to slopes which may be adversely affected by weather or moisture content. The trench wall to pipe distance below the top of pipe shall not exceed 6 inches. Where recommended trench widths are exceeded, redesign, stronger pipe, or special installation procedures shall be utilized by the Contractor. The cost of redesign, stronger pipe, or special installation procedures shall be borne by the Contractor without any additional cost to the Government.

3.1.1.1 Bottom Preparation

Trenches shall be overexcavated to provide sufficient clearance for the bedding material below the bottom of the conduits. The bottoms of trenches shall be accurately graded to provide uniform bearing and support for the bedding material beneath each section of the pipe. Stones shall be removed to avoid point bearing on conduits.

3.1.1.2 Removal of Unyielding Material

Where unyielding material is encountered in the bottom of the trench, such material shall be removed to provide sufficient clearance for initial backfill material below the conduits.

3.1.1.3 Removal of Unstable Material

Where unstable material is encountered in the bottom of the trench, such material shall be removed to the depth directed and replaced to the proper grade with select granular material as provided in paragraph BACKFILLING AND COMPACTION. When removal of unstable material is required due to the Contractor's fault or neglect in performing the work, the resulting material shall be excavated and replaced by the Contractor without additional cost to the Government.

3.1.1.4 Excavation for Appurtenances

Excavation for manholes, catch-basins, inlets, or similar structures shall be of sufficient size to permit the placement and removal of forms for the full length and width of structure footings and foundations as shown. Rock and other cemented materials shall be cleaned of loose debris and cut to a firm surface either level, stepped, or serrated, as shown or as directed. Loose disintegrated rock and thin strata shall be removed. Removal of unstable material shall be as specified above. When concrete or masonry is to be placed in an excavated area, special care shall be taken not to disturb the bottom of the excavation. Excavation to the final grade level shall not be made until just before the concrete or masonry is to be placed.

3.1.1.5 Jacking, Boring, and Tunneling

Unless otherwise indicated, excavation shall be by open cut except that sections of a trench may be jacked, bored, or tunneled if, in the opinion of the Contracting Officer, the pipe, cable, or duct can be safely and properly installed and backfill can be properly compacted in such sections. The Contractor shall vertically and horizontally locate all underground utilities in the vicinity of the operation and shall repair any broken or damaged utilities or pavements at no cost to the Government. The Contractor shall obtain all permits and clearances for the operation. All excavations shall be completely backfilled, compacted, and graded upon completion of testing. No additional compensation shall be forthcoming for boring and jacking operations.

3.1.2 Stockpiles

Stockpiles of satisfactory and waste materials shall be separately placed and graded. Stockpiles shall be kept in a neat and well drained condition, giving due consideration to drainage at all times. The ground surface at stockpile locations shall be cleared, grubbed, and sealed by rubber-tired equipment, excavated satisfactory and unsatisfactory materials shall be separately stockpiled. Stockpiles of satisfactory materials shall be protected from contamination which may destroy the quality and fitness of the stockpiled material. If the Contractor fails to protect the stockpiles, and any material becomes unsatisfactory, such material shall be removed and replaced with satisfactory material from approved sources at no additional cost to the Government. Locations of stockpiles shall be subject to prior approval of the Contracting Officer.

3.2 BACKFILLING AND COMPACTION

Backfill material shall consist of satisfactory material and initial backfill material as required. Backfill shall be placed in layers not exceeding 6 inches loose thickness for compaction by hand operated machine compactors, and 8 inches loose thickness for other than hand operated machines, unless otherwise specified. Each layer shall be compacted to the

maximum dry densities specified herein after.

3.2.1 Trench Backfill

Trenches shall be backfilled to the grade shown. The trench shall be backfilled to 2 feet above the top of pipe prior to performing the required pressure tests. The joints and couplings shall be left uncovered during the pressure test and thrust blocks shall be allowed to cure for 48 hours prior to testing. Backfilling shall not be completed until all specified tests are performed and passed.

3.2.1.1 Replacement of Unyielding Material

Unyielding material removed from the bottom of the trench shall be replaced with initial backfill material.

3.2.1.2 Replacement of Unstable Material

Unstable material removed from the bottom of the trench or excavation shall be replaced or bridged with select granular material as directed.

3.2.1.3 Initial Backfill

Care shall be taken to ensure thorough compaction of material under the haunches of the pipe. Initial backfill material shall be placed and compacted with approved tampers to a height of at least one foot above the utility pipe or conduit. The backfill shall be brought up evenly on both sides of the pipe for the full length of the pipe. Initial backfill shall be placed in 6 inch loose lifts, each lift compacted with an approved hand-operated vibratory plate-type compactor until no additional surface elevation changes occur.

3.2.1.4 Final Backfill

The remainder of the trench, except for special materials for roadways, shall be filled with satisfactory material. Placed conduits shall be protected from crushing by construction vehicles during subsequent construction operations. The Contractor shall repair damaged lines at no additional cost to the Government. Backfill material shall be placed and compacted as follows:

a. Under Paved Areas and Shoulders: Backfill shall be placed and compacted to a minimum of 95 percent of the maximum laboratory dry density, full depth. Water flooding or jetting methods of compaction will not be permitted.

b. Sidewalks, Turfed or Seeded Areas and Miscellaneous Areas: Backfill shall be deposited and compacted to 90 percent of the maximum laboratory dry density. Compaction by water flooding or jetting will not be permitted. This requirement shall also apply to all other areas not specifically designated above.

3.2.2 Backfill for Appurtenances

After the manhole, catchbasin, inlet, or similar structure has been constructed and the concrete has been allowed to cure for 7 days, backfill shall be placed in such a manner that the structure will not be damaged by the shock of falling earth. The backfill material shall be deposited and compacted as specified for final backfill, and shall be brought up evenly

on all sides of the structure to prevent eccentric loading and excessive stress.

3.3 SPECIAL REQUIREMENTS

Special requirements for both excavation and backfill relating to the specific utilities are as follows:

3.3.1 Water Lines

Trenches shall be of a depth to provide a minimum cover of 2 feet from the existing ground surface, or from the indicated finished grade, whichever is lower, to the top of the pipe. Thrust blocks shall be placed at the joints as shown on the Contract Drawings; care shall be taken to keep thrust block concrete clear of the joint interfaces and bolted connections. Thrust blocks shall be allowed to cure for a minimum of 48 hours prior to pressure testing.

3.3.2 Electrical Distribution System

Direct burial cable and conduit or duct line shall have a minimum cover of 24 inches from the finished grade, unless otherwise indicated. Special trenching requirements for direct-burial electrical cables and conduits are specified in Section 16375 ELECTRICAL DISTRIBUTION SYSTEM, UNDERGROUND.

3.3.3 Plastic Marking Tape

Warning tapes shall be installed directly above the pipe, at a depth of 18 inches below finished grade unless otherwise shown.

3.4 TESTING

Testing shall be the responsibility of the Contractor and shall be performed at no additional cost to the Government. Testing shall be performed by an independent commercial testing laboratory that has been inspected by the National Institute of Standards and Technology (NIST) for compliance with ASTM E 329, ASTM D 3740, and ASTM C 1077, as applicable. Testing personnel shall meet the requirements outlined in ASTM D 5255. No work requiring testing will be permitted until the personnel and testing facilities have been approved by the Contracting Officer.Information shall be submitted on a "Density Test Log" which shall include but not be limited to the following: test date, test number, feature of work, station/location, offset, elevation, in place dry unit weight, moisture content, percent compaction, pass or fail, test method, and soil classification.

3.4.1 In-Place Densities

Field in-place density shall be determined in accordance with ASTM D 1556 or ASTM D 2922. When ASTM D 2922 is used, the calibration curves shall be checked and adjusted if necessary by the procedure described in ASTM D 2922, paragraph ADJUSTING CALIBRATION CURVE. ASTM D 2922 results in a wet unit weight of soil and when using this method ASTM D 3017 shall be used to determine the moisture content of the soil. The calibration curves furnished with the moisture gauges shall also be checked along with density calibration checks as described in ASTM D 3017. Calibration checks, using ASTM D 1556 and ASTM D 2216, for both the density and moisture gauges shall be made at the beginning of a job and on each different type of material encountered; a minimum one calibration check shall be performed for each

set of five nuclear compaction tests.

3.4.2 Moisture-Density Relationships

Moisture-density relationships shall be determined by the test method outlined in ASTM D 1557, Procedure C.

3.4.3 Gradation, Atterberg Limits, and Classification

Gradation testing aggregates shall be performed by the test method outlined in ASTM C 136. Gradation testing for soil materials shall be performed in accordance with ASTM D 422. Atterberg limits shall be determined by ASTM D 4318. Classification shall be determined by the test method outlined in ASTM D 2487.

3.4.4 Miscellaneous Testing

Wear tests for select granular material and controlled low-strength material aggregate shall be performed in accordance with ASTM C 131. Aggregates shall have a loss of no greater than 40 percent when tested with 500 revolutions. A minimum of two compressive strength tests shall be in accordance with ASTM C 39 for each source of controlled low strength material. Sieve size analysis for sand and controlled low-strength material aggregate shall be performed in accordance with ASTM C 136.

3.4.5 Testing Schedule

The following number of tests, if performed at the appropriate time, shall be the minimum acceptable for each type operation.

(a) Field Density and Moisture Content: For utility trenches, perform one test for each lift or each increment or fraction of 200 feet. For isolated utility appurtenances, one random test during backfilling operations at each location.

(b) Moisture-Density Relationship with Gradation, Atterberg Limits, and Classification: From a bulk sample; one set of tests for every 5 field density tests (with not less than 1 test for each type of material).

(c) Miscellaneous Granular Materials: For select granular material and controlled low-strength material aggregate; perform a minimum of two random sieve size analyses and two wear tests for each material source. Perform a minimum of two sieve size analyses and two water content tests for in place sand, if used for bedding and initial backfill. A minimum of two compressive strength tests shall be performed for each source of controlled low strength material.

3.4.6 Displacement of Sewers

After other required tests have been performed and the trench backfill compacted to 2 feet above the top of the pipe, the pipe shall be inspected to determine whether significant displacement has occurred. This inspection shall be conducted in the presence of the Contracting Officer. Pipe sizes larger than 36 inches shall be entered and examined, while smaller diameter pipe shall be inspected by shining a light or laser between manholes or manhole locations, or by the use of television cameras passed through the pipe. If, in the judgement of the Contracting Officer, the interior of the pipe shows poor alignment or any other defects that would cause improper functioning of the system, the defects shall be

remedied as directed at no additional cost to the Government.

-- End of Section --

SECTION TABLE OF CONTENTS

DIVISION 02 - SITE WORK

SECTION 02452

TRAFFIC SIGNS

PART 1 GENERAL

1.1 REFERENCES
1.2 UNIT PRICES

PART 2 PRODUCTS

2.1 TRAFFIC SIGNS
2.1.1 Stop Signs
2.1.2 Other Traffic Signs
2.2 RESERVED PARKING (HANDICAP PARKING) SIGNS:
2.3 SIGN POSTS, SUPPORTS AND FOUNDATIONS FOR TRAFFIC SIGNS
2.4 SIGN POSTS, AND FOUNDATIONS FOR RESERVED PARKING (HANDICAP PARKING) SIGNS

PART 3 EXECUTION

-- End of Section Table of Contents --

SECTION 02452

TRAFFIC SIGNS

PART 1 GENERAL

1.1 REFERENCES

The publications listed below form a part of this specification to the extent referenced. The publications are referred to in the text by basic designation only.

FEDERAL HIGHWAY ADMINISTRATION

Manual on Uniform Traffic Control Devices

1.2 UNIT PRICES

Compensation for traffic signs shall be for each sign properly installed and accepted under the individual sign items of the base year Line Item Heading 0025, "FURNISH AND INSTALL ROAD SIGNS" of the Pricing Schedule. This payment will constitute full compensation for furnishing materials, equipment, and labor and incidentals necessary to complete the work required, and for removing and properly disposing of replaced materials. Any required work or materials, such as lubricants and creosote, which are not listed on the Unit Price Schedule, shall be considered subsidiary to the items listed, and their cost shall be included in the costs for the listed items. Bid items are self-explanatory except as described below.

PART 2 PRODUCTS

2.1 TRAFFIC SIGNS

2.1.1 Stop Signs

Stop signs shall be 30-inch across and shall be a minimum of 0.080-inch thick new sheet aluminum of 6061-T6 or 5052-H38. Legend shall be 10-inches high reflectorized white on a reflectorized red background and signs shall have a reflectorized white border. Reflective sheeting for legend and background shall be that manufactured or marketed by the following firms: 3M, American Decal, or Mitsubishi Corp., or approved equal. Stop signs shall conform to Sign R1-1 of the Manual on Uniform Traffic Control Devices.

2.1.2 Other Traffic Signs

Other traffic signs shall be of the same backing material as stop signs, with reflectorized background and silk-screened legend symbols, and border for signs with black legend, symbols, and border, and reflectorized background and reflectorized legend, symbols and border for signs with red and white legend, symbols and border. Sign sizes, legend symbols and border shall conform to the manual on Uniform Traffic Control Devices. Reflective sheeting for background and legend shall be that manufactured or marketed by the following firms: 3M, American Decal, or Mitsubishi Corp., or approved equal.

2.2 RESERVED PARKING (HANDICAP PARKING) SIGNS:

Reserved parking signs shall be 18-inches high and 12-inches wide of 0.063 inch thick new sheet aluminum of 6061-T6 or 5052-H38. Legend and border shall be green, with 2-inch high letters. White symbol shall be 4-inches high on a 6-inch square blue background. The major sign background shall be white.

2.3 SIGN POSTS, SUPPORTS AND FOUNDATIONS FOR TRAFFIC SIGNS

Sign post, supports and foundations for traffic signs shall be in conformance with CALTRANS SS SECTION 56

2.4 SIGN POSTS, AND FOUNDATIONS FOR RESERVED PARKING (HANDICAP PARKING) SIGNS

Sign post and foundations for reserved parking signs shall be in conformance with CALTRANS SS SECTION 56.

PART 3 EXECUTION

(NOT APPLICABLE)

-- End of Section --

SECTION TABLE OF CONTENTS

DIVISION 02 - SITE WORK

SECTION 02567

GRINDING FOR ROADWAY PAVEMENT

PART 1 GENERAL

1.1 SCOPE OF WORK
1.2 REFERENCES
1.3 SUBMITTALS
1.4 MEASUREMENT
1.4.1 Measurement
1.4.2 Payment
1.5 WATER SUPPLY
1.6 ENVIRONMENTAL REQUIREMENTS

PART 2 PRODUCTS

2.1 EQUIPMENT
2.1.1 Grinding Machine

PART 3 EXECUTION

3.1 PREPARATION
3.2 GRINDING
3.2.1 Portland Cement Concrete
3.2.2 Asphalt Concrete Pavement
3.2.3 Ground Surface
3.2.4 Grinding Residue
3.3 NOISE LEVEL ZONE

-- End of Section Table of Contents --

SECTION 02567

GRINDING FOR ROADWAY PAVEMENT

PART 1 GENERAL

1.1 SCOPE OF WORK

This work shall consist of grinding asphalt concrete or portland cement pavement and roadway surfaces as shown on the plans and as specified in this specification.

1.2 REFERENCES

The publications listed below form a part of this specification to the extent referenced. The publications are referred to in the text by basic designation only.

STATE OF CALIFORNIA, DEPARTMENT OF TRANSPORTATION (CALTRANS), STANDARD SPECIFICATION (SS)

CALTRANS SS SECTION 40	(1995) Section 40, Portland Cement Concrete Pavement
CALTRANS SS SECTION 42	(1999) Section 42, Groove and Grind Pavement
CALTRANS SS SECTION 51	(1995) Section 51, Concrete Structure

1.3 SUBMITTALS

Government approval is required for submittals with a "GA" designation; submittals having an "FIO" designation are for information only. The following shall be submitted in accordance with Section 01330 SUBMITTAL PROCEDURES:

SD-01 Data

Equipment; GA.

List of proposed equipment to be used in performance of construction work, including descriptive data.

1.4 MEASUREMENT

1.4.1 Measurement

Pavement grinding on existing concrete pavements will be measured by the square yard. The quantity of pavement grinding to be paid will be determined by multiplying the width of the ground area by the horizontal length ground.

1.4.2 Payment

The contract price paid for the base year Line Item 0001AH, "MILL ASPHALT 1"" and 0001AI, "EACH ADDITIONAL INCH" of the Pricing Schedule for grinding

existing pavementS. Price shall include full compensation for furnishing all labor, materials, tools, equipment, and incidentals, and for doing all work involved in grinding the existing concrete pavement, including removing and disposing of residue, as specified in these specifications and as directed by the project engineer.

1.5 WATER SUPPLY

Water for the grooving operation shall be provided by the Contractor and shall be transported from the source shown on the drawings to the job.

1.6 ENVIRONMENTAL REQUIREMENTS

Grinding operations will not be permitted when freezing conditions prevent the immediate removal of debris and/or drainage of water from the grooved or grinded area.

PART 2 PRODUCTS

2.1 EQUIPMENT

2.1.1 Grinding Machine

Grinding shall be performed with abrasive grinding machine utilizing diamond cutting blades.

PART 3 EXECUTION

3.1 PREPARATION

Pavement grinding shall be performed in accordance with CALTRANS SS SECTION 40 and CALTRANS SS SECTION 42.

3.2 GRINDING

3.2.1 Portland Cement Concrete

Grinding shall be performed so that the pavement surface on both sides of all transverse joints and cracks has essentially the same depth of texture and does not vary from a true plane enough to permit a 0.075 inch thick shim 3 inches wide to pass under a 3-foot straight edge adjacent to either side of the joint or crack when the straight-edge is laid on the pavement parallel to centerline with its midpoint at the joint or crack. After grinding has been completed, the pavement shall conform to the straightedge and profile requirements specified in CALTRANS SS SECTION 40 -1.10, "Final Finishing", Portland Cement Concrete Pavement, California Department of Transportation (CALTRANS) Handbook.

3.2.2 Asphalt Concrete Pavement

Grinding shall be performed so that the finished surface shall not vary from a true plane enough to permit a 0.118-inch thick shim 3 inches wide to pass under a straightedge 12 feet long when the straightedge is laid on the finished surface parallel with the centerline. The traverse slope of the finished surface shall be uniform to a degree such that a 0.24 inch thick shim 3 inches wide will not pass under a straightedge 12 feet long when the straightedge is laid on the finished surface in a direction transverse to the centerline and extending from edge to edge of a 12 foot traffic lane.

3.2.3 Ground Surface

Ground surfaces shall not be smooth or polished and, except as otherwise specified in the CALTRANS SS SECTION 51-1.17, shall have a coefficient of friction of not less than 0.30 as determined by California Test 342.

3.2.4 Grinding Residue

Residue from grinding operations shall be picked up by means of a vacuum attachment to the grinding machine and shall not be allowed to flow across the pavement nor be left on the surface of the pavement. Residue from grinding portland cement concrete pavement and asphalt concrete shall be disposed of at a location specified by the project engineer.

3.3 NOISE LEVEL ZONE

The noise level created by the combined grooving or grinding operation shall not exceed 86 dBA at a distance of 50 feet at right angles to the direction of travel. If this noise level zone for adequate wearing protection is exceeded, then the Contractor shall provide, and the employee shall wear, adequate hearing protection.

-- End of Section --

SECTION TABLE OF CONTENTS

DIVISION 02 - SITE WORK

SECTION 02568

RAILROAD CROSSING PADS

PART 1 GENERAL

1.1 REFERENCES
1.2 UNIT PRICES
1.3 SUBMITTALS
1.4 DELIVERY, STORAGE, AND HANDLING
1.4.1 Materials and Samples
1.5 QUALIFICATIONS
1.5.1 Crossing Construction
1.6 PROJECT/SITE CONDITIONS
1.6.1 Temporary Work
1.6.2 Traffic Control

PART 2 PRODUCTS

2.1 Crossing Material or Surface

PART 3 EXECUTION

3.1 HIGHWAY CROSSINGS
3.1.1 Tie Plates, Spikes, and Rubber Tie Pads
3.1.2 Crossing Surface and Materials
3.2 SAMPLING AND TESTING
3.3 INSPECTION AND FIELD TESTING
3.3.1 Track

-- End of Section Table of Contents --

SECTION 02568

RAILROAD CROSSING PADS

PART 1 GENERAL

1.1 REFERENCES

The publications listed below form a part of this specification to the extent referenced. The publications are referred to in the text by basic designation only.

AMERICAN RAILWAY ENGINEERING ASSOCIATION (AREA)

AREA MRE	(1995) Manual for Railway Engineering (Fixed Properties)
AREA PTWP	(1995) Portfolio of Trackwork Plans

AMERICAN SOCIETY FOR TESTING AND MATERIALS (ASTM)

ASTM D 3740	(1994a) Minimum Requirements for Agencies Engaged in the Testing and/or Inspection of Soil and Rock as Used in Engineering Design and Construction

FEDERAL HIGHWAY ADMINISTRATION (FHWA)

FHWA SA-89-006	(1988) Manual on Uniform Traffic Control Devices for Streets and Highways

1.2 UNIT PRICES

Transitional material between road and railroad crossings shall be paid for at the per linear foot price for the base year Line Items; 0005AA, "RUBBER RAILROAD COSSING PAD", 0005AB, "CONCRETE RAILROAD CROSSING PAD", and 0005AC, "BITUMINOUS RAILROAD CROSSING PAD" of the Pricing Schedule. Compensation shall be for materials must be actually used or installed in the completed work. No measurement will be made for wasted materials or materials used for the convenience of the Contractor. This payment will constitute full compensation for furnishing materials, equipment, and labor and incidentals necessary to complete the work required, and for removing and properly disposing of replaced materials. Any required work or materials, such as lubricants, which are not listed on the Unit Price Schedule, shall be considered subsidiary to the items listed, and their cost shall be included in the costs for the listed items.

1.3 SUBMITTALS

Government approval is required for submittals with a "GA" designation; submittals having an "FIO" designation are for information only. The following shall be submitted in accordance with Section 01330 SUBMITTAL PROCEDURES:

SD-01 Data

Crossing Material or Surface; FIO.

Within 30 days of the Notice to Proceed, the brand name of the premanufactured crossing material or crossing surface material proposed for use along with manufacturer's literature concerning the product; and for built-in-place crossings, the type of materials to be used along with manufacturer's literature.

SD-07 Schedules

Materials and Equipment; FIO.

A complete schedule of the materials proposed for installation within 60 days of receipt of notice to proceed, and before installation of the materials; the schedule shall include a list of equipment proposed for the work.

SD-08 Statements

Traffic Maintenance and Detour Plans; GA.

Traffic maintenance and detour plans for approval.

Crossing Material or Surface; FIO.

Detailed installation procedure for the premanufactured crossing material or crossing surface material proposed for use within 30 days of the notice to proceed.

SD-09 Reports

Materials and Equipment; FIO.

Manufacturer's certificates of conformance for the following materials:

a. Premanufactured road crossings and/or crossing surfaces.

1.4 DELIVERY, STORAGE, AND HANDLING

1.4.1 Materials and Samples

The Contracting Officer will notify the Contractor of the materials approved or disapproved. Disapproved materials that have already been delivered to the project site, shall be promptly segregated from the approved materials and removed from the premises. If materials are disapproved, acceptable replacement materials shall be provided at no additional cost to the Government. Initial approval by the Contracting Officer will not prevent the removal and replacement of materials that are materially defective or materials not meeting this specification that are discovered during construction and/or routine quality control/quality assurance operations.

1.5 QUALIFICATIONS

1.5.1 Crossing Construction

Crossing construction shall be performed under the direction of qualified and competent supervisory personnel experienced in railroad construction.

1.6 PROJECT/SITE CONDITIONS

1.6.1 Temporary Work

During construction, suitable roads and crossings with all necessary lights, signs, drainage, and other appurtenances required for safe public and local travel shall be provided. Suitable temporary fences shall be erected and maintained where required to prevent trespass upon work or damage to adjoining property. Drainage shall be maintained, and the accumulation of water that might affect the stability of the roadbed shall not be permitted.

1.6.2 Traffic Control

Traffic control devices shall comply with FHWA SA-89-006. Suitable warning signs shall be placed near the beginning of the work site and well ahead of the work site for alerting approaching traffic from both directions. Small markers shall be placed along newly painted lines or freshly placed raised markers to control traffic and prevent damage to newly painted surfaces or displacement of raised pavement markers. Painting equipment shall be marked with large warning signs indicating slow-moving painting equipment in operation.

PART 2 PRODUCTS

2.1 Crossing Material or Surface

Crossing material or surface material shall be new and shall be fabricated in accordance with AREA PTWP and AREA MRE.

PART 3 EXECUTION

3.1 HIGHWAY CROSSINGS

Highway and other crossings within the project shall be constructed as indicated on the contract drawings or as shown on the standard plans of AREA PTWP.

3.1.1 Tie Plates, Spikes, and Rubber Tie Pads

All ties within the crossing and for 20 feet beyond each end of the crossing shall be fully tie plated, and spiked with 4 rail-holding spikes per tie plate. Rubber tie pads shall be installed between the tie and tie plate on all ties within the crossing area and for 20 ft beyond each end of the crossing.

3.1.2 Crossing Surface and Materials

The crossing surface shall be installed to provide a smooth crossing for vehicles. The crossing shall be maintained at an elevation level with or above the top of the rails, but not greater than 1/4 inch higher than the top of the rails. Maintain this elevation for a distance of 2 feet outside of the rails for either single or multiple-track crossings. Additionally, a smooth transition shall be maintained between the crossing surface and the adjoining pavement.

3.2 SAMPLING AND TESTING

Sampling and testing shall be the responsibility of the Contractor. Sampling and testing shall be performed by an approved commercial testing laboratory, or by the Contractor, subject to approval. If the Contractor elects to establish testing facilities, approval of such facilities shall be based on compliance with ASTM D 3740. No work requiring testing will be permitted until the Contractor's facilities have been inspected and approved. The first inspection of the facilities will be at the expense of the Government and any subsequent inspections required because of failure of the first inspection shall be at the expense of the Contractor. Such costs will be deducted from the total amount due the Contractor.

3.3 INSPECTION AND FIELD TESTING

Quality control inspection and testing shall be performed by the Contractor.

3.3.1 Track

Inspection shall be performed to ensure that all the requirements of these specifications are met. Bolted joints shall be inspected for loose bolts and for smooth transitions between rails of different sections. Rail, tie plates, and ties shall be checked to ensure that the rail is properly seated and has full bearing on the tie plate and tie.

-- End of Section --

SECTION TABLE OF CONTENTS

DIVISION 02 - SITE WORK

SECTION 02579

PARTIAL DEPTH (SPALL) REPAIRS OF RIGID PAVEMENTS

PART 1 GENERAL

1.1 SCOPE OF WORK
1.2 REFERENCES
1.3 UNIT PRICES
1.3.1 Measurement
1.3.1.1 Concrete
1.3.1.2 Epoxy-Resin Grout
1.3.2 Payment
1.3.2.1 Concrete
1.3.2.2 Epoxy-Resin Grout
1.4 DESIGN
1.5 SUBMITTALS
1.6 EQUIPMENT; APPROVAL AND MAINTENANCE
1.7 SAMPLING AND LABORATORY TESTING OF MATERIALS
1.7.1 Cement
1.7.2 Aggregate
1.7.3 Joint-Sealing Materials
1.7.4 Epoxy-Resin Grout
1.8 DELIVERY AND STORAGE OF MATERIALS
1.8.1 Cement
1.8.2 Aggregates
1.8.3 Epoxy-Resin Grout
1.9 WEATHER LIMITATIONS

PART 2 PRODUCTS

2.1 MATERIALS
2.1.1 Coarse Aggregate
2.1.1.1 Composition
2.1.1.2 Quality
2.1.1.3 Particle Shape
2.1.1.4 Size and Grading
2.1.2 Fine Aggregate
2.1.2.1 Composition
2.1.2.2 Particle Shape
2.1.2.3 Grading
2.1.3 Air-Entraining Admixture
2.1.4 Cement
2.1.5 High-Early-Strength Portland Cement
2.1.6 Curing Materials
2.1.6.1 Burlap
2.1.6.2 Curing Compound
2.1.6.3 Waterproof Blanket Materials
2.1.7 Epoxy-Resin Grout
2.1.8 Water

PART 3 EXECUTION

3.1 REPAIRING PARTIAL DEPTH SPALLS ALONG JOINTS, CRACKS, AND OTHER AREAS
3.1.1 Preparation
3.1.2 Filling
3.1.3 Portland Cement Concrete and Mortar Mixtures
3.1.4 Batching and Mixing Portland Cement Mixtures
3.1.5 Epoxy Resins
3.1.5.1 Mixing Epoxy-Resin Grout Components
3.1.5.2 Tools and Equipment
3.1.5.3 Health and Safety Precautions
3.1.6 Joints
3.1.7 Steel Encountered In Cavity
3.1.8 Curing Portland Cement Concrete and Mortar
3.1.9 Testing During Construction
3.1.10 Final Acceptance
3.2 CONSTRUCTION QUALITY CONTROL

-- End of Section Table of Contents --

SECTION 02579

PARTIAL DEPTH (SPALL) REPAIRS OF RIGID PAVEMENTS

PART 1 GENERAL

1.1 SCOPE OF WORK

This specification shall be used for partial depth repairs using Portland Cement Concrete (pcc) and Epoxy concrete. Epoxy mortar repairs shall be performed for repairs less than 0.03 cubic feet and pcc repairs for repairs equal to and greater than 0.03 cubic feet. Full depth repairs are specified in Section 02754 CONCRETE PAVEMENT FOR SMALL PROJECTS.

1.2 REFERENCES

The publications listed below form a part of this specification to the extent referenced. The publications are referred to in the text by basic designation only.

AMERICAN ASSOCIATION OF STATE HIGHWAY AND TRANSPORTATION OFFICIALS (AASHTO)

AASHTO M 182	(1991) Burlap Cloth Made from Jute or Kenaf

AMERICAN SOCIETY FOR TESTING AND MATERIALS (ASTM)

ASTM C 31	(1991) Making and Curing Concrete Test Specimens in the Field
ASTM C 33	(1997) Concrete Aggregates
ASTM C 39	(1993) Compressive Strength of Cylindrical Concrete Specimens
ASTM C 131	(1989) Resistance to Abrasion of Small Size Coarse Aggregate by Abrasion & Impact in the Los Angeles Machine
ASTM C 136	(1995a) Sieve Analysis of Fine and Coarse Aggregates
ASTM C 143	(1990a) Slump of Hydraulic Cement Concrete
ASTM C 150	(1995) Portland Cement
ASTM C 171	(1995) Sheet Materials for Curing Concrete
ASTM C 173	(1994a) Air Content of Freshly Mixed Concrete by the Volumetric Method
ASTM C 192	(1990a) Making and Curing Concrete Test Specimens in the Laboratory
ASTM C 231	(1991b) Air Content of Freshly Mixed Concrete by the Pressure Method

ASTM C 260	(1994) Air-Entraining Admixtures for Concrete
ASTM C 494	(1992) Chemical Admixtures for Concrete
ASTM C 685	(1998a) Standard Specification for Concrete Made By Volumetric Batching and Continuous Mixing
ASTM C 881	(1990) Epoxy-Resin-Base Bonding Systems for Concrete
ASTM D 75	(1987; R 1992) Sampling Aggregates

CORPS OF ENGINEERS (COE)

COE CRD-C 104	(1980) Method of Calculation of the Fineness Modulus of Aggregate
COE CRD-C 300	(1990) Specification for Membrane-Forming Compounds for Curing Concrete

1.3 UNIT PRICES

1.3.1 Measurement

1.3.1.1 Concrete

The quantity of concrete to be paid for will be the number of square feet placed in the completed and accepted patched areas.

1.3.1.2 Epoxy-Resin Grout

The quantity of epoxy-resin grout material to be paid for will be the number of square feet, placed in the completed and accepted patched areas.

1.3.2 Payment

1.3.2.1 Concrete

The quantity of concrete, measured as specified, will be paid for at the unit price for the particular option year Line Item _031A, "Use of Early Strength Blended Concrete" of the Pricing Schedule. The unit price for concrete will include materials, tools and equipment and labor involved in placing concrete on the surface of the existing pavement to be patched.

1.3.2.2 Epoxy-Resin Grout

The quantity of epoxy-resin grout determined as specified will be paid for at the contract unit price for the particular option year Line Item _031B, "Use of Epoxy Concrete" of the Pricing Schedule, which price will include all costs of handling, hauling, storage at the site, labor, materials, tools and equipment, and for performing work involved in placing epoxy-resin grout on the surface of the existing pavement to be patched.

1.4 DESIGN

The concrete mixtures shall be designed to produce concrete having an

average compressive strength as indicated in paragraph "3.1.3 Portland Cement Concrete and Mortar Mixtures". The concrete mixtures shall be designed to secure an air content by volume of 4 percent, plus or minus 1 percent, based on measurements made on concrete immediately after discharge from the mixer in conformance with ASTM C 231. Mix design studies and tests shall be made in accordance with ASTM C 39 and ASTM C 192, and the test results submitted for approval. The coarse aggregate shall have a percentage of wear not to exceed 30 percent after 500 revolutions when teste in accordance with ASTM C 131.

1.5 SUBMITTALS

Government approval is required for submittals with a "GA" designation; submittals having an "FIO" designation are for information only. The following shall be submitted in accordance with Section 01300 SUBMITTAL PROCEDURES:

SD-01 Data

Patching System; GA.

Three copies of the proposed mix design, 14-days prior to placement. The mix design shall indicate the weight of each ingredient of the mixture. No concrete shall be placed prior to approval of the proposed mix design. No deviation from the approved job-mix formula will be permitted without prior approval.

SD-09 Reports

Patching System; GA.

Three copies of test results, shall be provided within 24 hours of physical completion of laboratory testing. Manufacturer's certifications may be submitted rather than laboratory test results for proposed materials. Certificates should certify compliance with the appropriate specification referenced herein. No materials shall be placed without prior approval from the Contracting Officer.

1.6 EQUIPMENT; APPROVAL AND MAINTENANCE

Dependable and sufficient equipment that is appropriate and adequate to accomplish the work specified shall be assembled at the site of the work a sufficient time before the start of paving to permit thorough inspection, calibration of weighing and measuring devices, adjustment of parts, and the making of any repairs that may be required. The equipment shall be maintained in good working condition.

1.7 SAMPLING AND LABORATORY TESTING OF MATERIALS

Sampling and testing shall be performed by an approved commercial laboratory or by the Contractor subject to approval. Should the Contractor elect to establish testing facilities, no work requiring testing shall be permitted until the Contractor's facilities have been inspected and approved. The first laboratory inspection shall be at the expense of the Government and the cost of any subsequent inspection resulting from failure of the first inspection shall be at the expense of the Contractor. Such costs shall be deducted from the total amount due the Contractor. All testing shall be performed at no additional cost to the Government.

1.7.1 Cement

Cement shall be tested as prescribed in the referenced specification under which it is furnished. Cement may be accepted on the basis of mill tests and the manufacturer's certification of compliance with the specification, provided the cement is the product of a mill with a record for the production of high-quality cement for the past 3 years.

1.7.2 Aggregate

Aggregate samples for laboratory testing shall be taken in conformance with ASTM D 75 and tested in accordance with ASTM C 136.

1.7.3 Joint-Sealing Materials

Joint-sealing materials shall be tested for conformance with the referenced applicable material specification.

1.7.4 Epoxy-Resin Grout

Epoxy-resin grout shall be tested for conformance with ASTM C 881.

1.8 DELIVERY AND STORAGE OF MATERIALS

1.8.1 Cement

Cement may be furnished in bulk or in suitable bags used for packaging cements and shall be stored in a manner to prevent absorption of moisture.

1.8.2 Aggregates

Aggregates shall be handled and stored in a manner to avoid breakage, segregation, or contamination by foreign materials.

1.8.3 Epoxy-Resin Grout

Epoxy-resin grout shall be delivered to the site in such manner as to avoid damage or loss. Storage areas shall be in a windowless and weatherproof, but ventilated, insulated noncombustible building, with provision nearby for conditioning the material to 70 to 85 degrees F for a period of 48 hours prior to use. The ambient temperature in the storage area of the epoxy materials shall at no time be higher than 100 degrees F.

1.9 WEATHER LIMITATIONS

Concrete shall not be placed when weather conditions detrimentally affect the quality of the finished product. No concrete shall be placed when the air temperature is below 40 degrees F in the shade. When air temperature is likely to exceed 90 degrees F, the concrete shall have a temperature not exceeding 90 degrees F when deposited, and the surface of such placed concrete shall be kept damp with a water fog until the approved curing medium is applied.

PART 2 PRODUCTS

2.1 MATERIALS

2.1.1 Coarse Aggregate

2.1.1.1 Composition

Coarse aggregate shall consist of gravel, crushed gravel, crushed stone, or a combination thereof.

2.1.1.2 Quality

Aggregate as delivered to the mixers shall consist of clean, hard, unweathered, and uncoated particles. Dust and other coatings shall be removed from the coarse aggregates by adequate washing.

2.1.1.3 Particle Shape

Particles of the coarse aggregate shall be generally spherical or cubical in shape. The coarse aggregate shall have a percentage of wear not to exceed 30 percent after 500 revolutions when tested in accordance with ASTM C 131.

2.1.1.4 Size and Grading

The maximum nominal size of the coarse aggregate shall be 1/2 inch. The coarse aggregate shall be well graded within the limits specified, and when tested in accordance with ASTM C 136, shall conform to the following grading requirements as delivered to the batching hoppers:

Sieve designation U.S. Standard square mesh	Percentage by weight passing individual sieves No. 4 to 1/2 inch
3/4 inch	100
1/2 inch	90-100
3/8 inch	40-70
No. 4	0-15
No. 8	0-5

2.1.2 Fine Aggregate

2.1.2.1 Composition

Fine aggregate shall consist of either natural sand, manufactured sand, or a combination of natural and manufactured sand, and shall be composed of clean, hard, durable particles.

2.1.2.2 Particle Shape

Particles of the fine aggregate shall be generally spherical or cubical in shape.

2.1.2.3 Grading

Grading of the fine aggregate as delivered to the mixer shall conform to the following requirements when tested in accordance with ASTM C 136.

Sieve designation U.S. Standard square mesh	Percentage by weight, passing
3/8 inch	100
No. 4	95-100
No. 8	80-90
No. 16	60-80
No. 30	30-60
No. 50	12-30
No. 100	2-10

In addition, the fine aggregate, as delivered to the mixer, shall have a fineness modulus of not less than 2.40 nor more than 2.90, when calculated in accordance with COE CRD-C 104.

2.1.3 Air-Entraining Admixture

Air-entraining admixture shall conform to ASTM C 260.

2.1.4 Cement

Cement shall be portland cement conforming to ASTM C 150, Type II, low alkali.

2.1.5 High-Early-Strength Portland Cement

ASTM C 150, Type III with tricalcium aluminate limited to 5 percent, low alkali. Type III cement shall be used only in isolated instances and only when approved in writing.

2.1.6 Curing Materials

2.1.6.1 Burlap

Burlap shall conform to AASHTO M 182.

2.1.6.2 Curing Compound

Membrane-forming curing compound shall be a pigmented type conforming to COE CRD-C 300.

2.1.6.3 Waterproof Blanket Materials

Waterproof blanket materials shall conform to ASTM C 171, Type optional, color white.

2.1.7 Epoxy-Resin Grout

Epoxy-resin grout shall be a two-component material formulated to meet the requirements of ASTM C 881, Type I or II. Type I material shall be used when pavement, materials, or atmospheric temperatures are 70 degrees F or above. Type II material shall be used when pavement, materials, or atmospheric temperatures are below 70 degrees F.

2.1.8 Water

Water shall be clean, fresh, and free from injurious amounts of oil, acid, salt, alkali, organic matter, or other deleterious substances. Water approved by Public Health authorities for domestic consumption may be accepted for use without being tested.

PART 3 EXECUTION

3.1 REPAIRING PARTIAL DEPTH SPALLS ALONG JOINTS, CRACKS, AND OTHER AREAS

Mixing, placing, consolidating, and finishing of repair material and application of curing procedures shall take place only in the presence of a Government representative. It shall be the Contractor's responsibility to inform the Government of his work schedule each day so a Government representative will be there as needed to meet the above requirement. No mixing or placing of repair materials shall take place when the temperature of the repair material or of the pavement temperature exceeds 100 degrees F.

3.1.1 Preparation

Where directed, spalls along joints of new slabs, along edges of adjacent existing concrete, and other locations shall be repaired by first making double vertical sawcut at least 2-inches outside the spalled area and to a depth of at least 2-inches. Saw cuts shall be straight lines forming rectangular areas in line with the jointing pattern. Sawcut runouts (kerfs) beyond the edges of the repair cavity shall be cleaned and filled, as approved, with epoxy resin conforming to ASTM C881, Type IV, Grade 2, after the curing period is over. The concrete within the sawcut lines or between the sawcut and the joint, or crack, shall be chipped out to remove all unsound concrete and at least 1-inch depth of visually sound concrete, and to provide at least 2 in. total depth from the pavement surface throughout. Removal shall be performed using light jackhammers, maximum weight of 30 lb. The cavity thus formed shall be thoroughly cleaned with high pressure water jets supplemented with compressed air to remove all loose material. Cavity to be filled with portland cement concrete or mortar shall be kept completely moist for the 24 hours immediately before the application. Cavity to be filled with epoxy does not need pre-wet period and should be kept dry prior to epoxy placement. All free water shall be blown from the cavity immediately before placing the bond coat. Immediately before filling the cavity, a bond coat shall be applied to the cleaned surface of all sides and bottom of the cavity, except any joint face. The bond coat shall be applied in a thin coating and scrubbed into the surface with a stiff-bristle brush. Bond coat for portland cement repairs shall be a neat cement grout and for epoxy resin repairs shall be epoxy resin, Type III, Grade 1 conforming to ASTM C881.

3.1.2 Filling

The cavity shall be filled with portland cement concrete or mortar or with epoxy resin mortar, immediately after the bond coat is applied--before it begins to dry.

Portland cement concrete shall be used for larger spalls, those more than 1/3 cu. ft. in size after removal operations, provided there is no dimension less than 3-in.;

Portland cement mortar shall be used for all spalls equal or less than 1/3 cu. ft and greater than 0.03 cu. ft.; and

Epoxy resin mortar or type III, Grade 3 epoxy resin shall be used for those spalls equal or less than 0.03 cu. ft. in size after removal

operations.

Portland cement concretes and mortars shall be very low slump mixtures, with 1/2-inch or less slump, proportioned, mixed, placed, and consolidated by vigorous tamping, supplemented by use of small diameter immersion vibrators, all as specified or directed. Grate tampers (jitterbugs) shall not be used. The concrete or mortar, while still green but sufficiently hardened to bear a man's weight without appreciable imprint shall be floated to a true even plane. Hand floating shall be supplemented with an approved vibratory compactor for small patches (up to 8.0 sq. ft.) and with an approved disc-type mechanical float which has integral impact mechanism for larger patches. Under no conditions shall any water or dry cement be added to the surface at any time before curing commences. The finished surface of repairs shall have a texture matching the surrounding pavement surface. The surfaces shall be checked for grade and shall meet the grade of the surrounding pavement and shall not deviate more than 1/8 inch from a true plane surface in the repair area.

3.1.3 Portland Cement Concrete and Mortar Mixtures

The Contractor shall be responsible for developing mixture proportions; this shall be performed by an approved commercial laboratory. Concrete shall conform to the materials and production requirements specified for paving concrete, except as otherwise specified herein. Water-cement ratio of the concrete shall not exceed 0.40, the mixture shall be designed to produce concrete having at least 4000 psi at 14 days, and shall contain the greatest proportion of coarse aggregate, ASTM C 33 grading size No. 4 and No. 67, practical to use, as approved. Mixture proportions developed for concrete and mortar shall be submitted for approval before starting construction. Mortar shall consist of the following materials, proportioned by weight as follows:

1.00 part portland cement
1.15 to 1.25 parts fine aggregate
1.80 to 2.00 parts coarse aggregate--max. size 3/4 in.
Water--Max. w/c ratio 0.33
Air entraining admixture as required

Water reducing admixture conforming to ASTM C 494 Type A, may be used in concrete and mortar, as approved.

3.1.4 Batching and Mixing Portland Cement Mixtures

Portland cement concrete shall be mixed in a continuous batching and mixing plant conforming to ASTM C685 or in drum type mixers or in pugmills, neither the drum type or pugmill mixers to be over 4 sack size. Mortar shall be mixed in a horizontal shaft mortar mixer. All measuring, batching, and mixing procedures and equipment shall be subject to specific approval. All materials shall be batched by weight, except that water and admixtures may be batched by volume. Each dry material may be prebatched for each batch and supplied in waterproof containers. Mixing shall be performed adjacent to the repair areas. Batches shall not exceed 0.5 cu. yd. in size. Ready-mix concrete or conventional truck mixers shall not be used. If the materials and procedures are approved in writing, latex modified concrete mixtures may be used for repairing spalls less than 1/3-cu. ft. in size.

3.1.5 Epoxy Resins

Epoxy resin mortars shall be made with Type III, Grade l epoxy resin, using proportions and mixing, placing, and curing procedures as recommended by the manufacturer and approved by the Contracting Officer. The epoxy resin

materials shall be placed in the cavity in layers not over 2-in. thick. The time interval between placement of additional layers shall be such that the temperature of the epoxy resin material does not exceed 140 degrees F. at any time during hardening. Mechanical vibrators and hand tampers shall be used to consolidate the epoxy resin mortar. Any repair material on the surrounding surfaces shall be removed before it hardens.

3.1.5.1 Mixing Epoxy-Resin Grout Components

Epoxy-resin grout components shall be mixed in the proportions recommended by the manufacturer. The components shall be conditioned to 70 degrees F to 85 degrees F for 48 hours prior to mixing. The two epoxy components shall be mixed with a power-driven, explosion-proof stirring device in a metal or polyethylene container having a hemispherical bottom. The polysulfide-curing-agent component shall be added gradually to the epoxy-resin component with constant stirring until a uniform mixture is obtained. The rate of stirring shall be such that the entrained air is a minimum.

3.1.5.2 Tools and Equipment

Tools and equipment used further in the work shall be thoroughly cleaned before the epoxy-resin grout sets.

3.1.5.3 Health and Safety Precautions

The following health and safety precautions shall be followed:

a. Full face shields shall be provided for all mixing and blending operations and for placing operations as required.

b. Protective coveralls and neoprene-coated gloves shall be provided for all workmen engaged in the operations.

c. Protective creams of a suitable nature for the operation shall be supplied.

d. Adequate fire protection shall be maintained at all mixing and placing operations.

e. Smoking or the use of spark- or flame-producing devices shall be prohibited within 50 feet of mixing and placing operations.

f. The mixing, placing, or storage of epoxy-resin grout or solvent shall be prohibited within 50 feet of any vehicle, equipment, aircraft, or machinery that could be damaged from fire or could ignite vapors from the material.

3.1.6 Joints

Where the spalled area abuts a joint, an insert or other bond-breaking medium shall be used to prevent bond between the patch and existing concrete at the joint face. A reservoir for the joint sealant shall be sawed to the dimensions required for other adjacent joints, and sealed as specified elsewhere.

3.1.7 Steel Encountered In Cavity

If reinforcing bars or tie bars are encountered at the required depth of

removal and not more than one-half of the circumference of the wire or bar is exposed, the bar or fabric shall be left in place, any loose rust blasted off, and the cavity repaired. If more than one-half of the circumference is exposed, the removal shall continue to a depth of 3/4 inch below and around bars and to 1/2 inch below fabric, any loose rust blasted off, and the cavity repaired. If more than 1/10 of the circumference of a dowel is exposed, the entire repair shall be made full depth of the pavement, and the dowel cut off and replaced by drilling and grouting as previously specified. If any of these is severely rusted so as to reduce the diameter by 20 percent or more at any point, it shall be cut off and replaced with similar new material, lapped or connected as approved.

3.1.8 Curing Portland Cement Concrete and Mortar

Curing shall be by moist curing for at least 7 days, followed by application of white-pigmented membrane-forming curing compound, performed as follows:

a. Commence immediately after finishing is complete for each repair (patch).

b. Apply two layers of completely presaturated clean burlap conforming to AASHTO M182.

c. Resaturate (oversaturate) the burlap after placing and immediately cover with clear or white polyethylene sheeting at least 4 mils in thickness.

d. Cover with plywood at least 1/2 inch thick or wood form material and weight down sufficiently to prevent displacement by wind.

e. All covering materials, burlap, plastic, and wood, shall extend at least 150 mm (6 inches) beyond every edge of the patch.

f. At least once every 24 hours, the plywood and plastic shall be removed, the burlap resaturated, and the plastic and plywood immediately replaced.

g. When moist curing operations are complete, remove the plastic sheet and the plywood between 20:00 and 24:00 hours in the evening. Between 3 and 7 hours later, remove the burlap and immediately apply a uniform coat of white-pigmented curing compound to the repair area. Curing compound shall conform to CRD-C300, and shall be applied at a coverage rate of 200 sq. ft. per gallon.

h. Patches shall be protected from traffic during the moist cure.

3.1.9 Testing During Construction

At least once for 1.0 cu. yd. of portland cement concrete or mortar, the Contractor shall perform slump and air content tests, and at double that interval shall fabricate, cure, protect and test 6 inch by 12 inch test cylinders. One cylinder shall be tested at 7 days and the other at 14-day age. The cylinders shall be fabricated and cured in accordance with ASTM C31 and tested in accordance with C39. Slump tests shall be made in accordance with ASTM C143, and air content tests in accordance with C231.

3.1.10 Final Acceptance

After 14 days and before final acceptance, each patch shall be tested by the Contractor in the presence of a Government representative. Patches shall be tested by sounding with a carpenter's hammer, at least 20 oz., or similar equipment. Any patches found to be drummy shall be removed and replaced at no additional cost to the Government.

3.2 CONSTRUCTION QUALITY CONTROL

Attention is directed to the applicable sections which requires the Contractor to perform quality control inspection, testing, and reporting.

-- End of Section --

SECTION TABLE OF CONTENTS

DIVISION 02 - SITE WORK

SECTION 02580

PAVEMENT MARKINGS

PART 1 GENERAL

1.1 REFERENCES
1.2 UNIT PRICES
1.2.1 Measurement
1.2.1.1 Pavement Striping and Marking
1.2.1.2 Surface Mounted and Recessed Reflectors
1.2.2 Payment
1.3 DELIVERY AND STORAGE
1.4 EQUIPMENT
1.4.1 Paint Application Equipment
1.4.2 Thermoplastic Application Equipment
1.4.2.1 Thermoplastic Material
1.4.2.2 Application Equipment
1.4.2.3 Mobile and Maneuverable
1.4.3 Reflective Media Dispenser
1.4.4 Preformed Tape Application Equipment
1.4.5 Surface Preparation Equipment
1.4.5.1 Sandblasting Equipment
1.4.5.2 Waterblast Equipment
1.4.6 Traffic Controls
1.5 HAND-OPERATED, PUSH-TYPE MACHINES

PART 2 PRODUCTS

2.1 PAINT
2.2 PREFORMED TAPE
2.3 RAISED REFLECTIVE MARKERS
2.4 REFLECTIVE MEDIA

PART 3 EXECUTION

3.1 SURFACE PREPARATION
3.1.1 Cleaning Existing Pavement Markings
3.2 APPLICATION
3.2.1 Paint
3.2.1.1 Rate of Application
3.2.1.2 Drying
3.2.2 Preformed Tape
3.2.3 Raised Reflective Markers
3.2.4 Reflective Media

-- End of Section Table of Contents --

SECTION 02580

PAVEMENT MARKINGS

PART 1 GENERAL

1.1 REFERENCES

The publications listed below form a part of this specification to the extent referenced. The publications are referred to in the text by basic designation only.

AMERICAN ASSOCIATION OF STATE HIGHWAY AND TRANSPORTATION OFFICIALS (AASHTO)

AASHTO M 247	(1981; Rev 1986) Glass Beads Used in Traffic Paint
AASHTO M 248	(1991I) Ready-Mixed White and Yellow Traffic Paints

AMERICAN SOCIETY FOR TESTING AND MATERIALS (ASTM)

ASTM D 792	(1991) Density and Specific Gravity (Relative Density) of Plastics by Displacement
ASTM D 4280	(1995) Extended Life Type, Nonplowable, Prismatic, Raised, Retroreflective Pavement Markers
ASTM D 4505	(1992) Preformed Plastic Pavement Marking Tape for Extended Service Life
ASTM E 28	(1992) Softening Point by Ring-and-Ball Apparatus

FEDERAL SPECIFICATIONS (FS)

FS TT-B-1325C	(1993) Beads (Glass Spheres) Retro-Reflective (Metric)
FS TT-P-1952D	(1994) Paint, Traffic and Airfield Marking, Water Borne

1.2 UNIT PRICES

1.2.1 Measurement

1.2.1.1 Pavement Striping and Marking

The unit of measurement for pavement striping and marking shall be the number of square feet of reflective and nonreflective striping or marking actually completed and accepted by the Contracting Officer.

1.2.1.2 Surface Mounted and Recessed Reflectors

The unit of measurement for raised and recessed pavement markers shall be for each reflector required. Payment will be for the total number actually placed and approved by the Contracting Officer.

1.2.2 Payment

The quantities of surface preparation and pavement striping or marking determined as specified in paragraph Measurement will be paid for at the contract unit price for the base year Line Items under heading: 0008, "STRIPING AND MARKING OF ROADS AND PARKING LOTS" of the Pricing Schedule. Payment for surface mounted reflectors shall for the base year Line Item heading 0014; "SURFACE MOUNTED REFLECTORS" of the Pricing Schedule. Payment for recessed reflectors shall be for base year Line Item 0015; "RECESSED REFLECTORS" of the Pricing Schedule. The payment will constitute full compensation for furnishing all labor, materials, tools, equipment, appliances, and doing all work involved in marking pavements and placing reflectors. Any striping or markings which are placed without reflective media, when reflective media is required, shall be removed and replaced at no cost to the Government. Striping or markings which do not conform to the alignment and/or location required will be removed and replaced at no cost to the Government.

1.3 DELIVERY AND STORAGE

All materials shall be delivered and stored in sealed containers that plainly show the designated name, formula or specification number, batch number, color, date of manufacture, manufacturer's name, and directions, all of which shall be plainly legible at time of use.

1.4 EQUIPMENT

All machines, tools and equipment used in the performance of the work shall be approved and maintained in satisfactory operating condition. Equipment operating on roads and runways will display low speed traffic markings and traffic warning lights.

1.4.1 Paint Application Equipment

The equipment to apply paint to pavements shall be a self-propelled or mobile-drawn pneumatic spraying machine with suitable arrangements of atomizing nozzles and controls to obtain the specified results. The machine shall have a speed during application not less than 5 mph, and shall be capable of applying the stripe widths indicated, at the paint coverage rate specified in paragraph APPLICATION, and of even uniform thickness with clear-cut edges. Equipment used for marking streets and highways shall be capable of placing the prescribed number of lines at a single pass as solid lines, intermittent lines or a combination of solid and intermittent lines using a maximum of two different colors of paint as specified. The paint applicator shall have paint reservoirs or tanks of sufficient capacity and suitable gauges to apply paint in accordance with requirements specified. Tanks shall be equipped with suitable air-driven mechanical agitators. The spray mechanism shall be equipped with quick-action valves conveniently located, and shall include necessary pressure regulators and gauges in full view and reach of the operator. Paint strainers shall be installed in paint supply lines to insure freedom from residue and foreign matter that may cause malfunction of the spray guns. The paint applicator shall be readily adaptable for attachment of an

air-actuated dispenser for the reflective media approved for use. Pneumatic spray guns shall be provided for hand application of paint in areas where the mobile paint applicator cannot be used.

1.4.2 Thermoplastic Application Equipment

1.4.2.1 Thermoplastic Material

Thermoplastic material shall be applied to the primed pavement surface by spray techniques or by the extrusion method, wherein one side of the shaping die is the pavement and the other three sides are contained by, or are part of, suitable equipment for heating and controlling the flow of material. By either method, the markings shall be applied with equipment that is capable of providing continuous uniformity in the dimensions of the stripe.

1.4.2.2 Application Equipment

Application equipment shall provide continuous mixing and agitation of the material. Conveying parts of the equipment between the main material reservoir and the extrusion shoe or spray gun shall prevent accumulation and clogging. All parts of the equipment which come into contact with the material shall be easily accessible and exposable for cleaning and maintenance. All mixing and conveying parts up to and including the extrusion shoes and spray guns shall maintain the material at the required temperature with heat-transfer oil or electrical-element-controlled heat.

The application equipment shall be so constructed as to ensure continuous uniformity in the dimensions of the stripe. The applicator shall provide a means for cleanly cutting off stripe ends squarely and shall provide a method of applying "skiplines." The equipment shall be capable of applying varying widths of traffic markings.

The applicator shall be equipped with a drop-on type bead dispenser capable of uniformly dispensing reflective glass spheres at controlled rates of flow. The bead dispenser shall be automatically operated and shall begin flow prior to the flow of composition to assure that the strip is fully reflectorized.

1.4.2.3 Mobile and Maneuverable

Application equipment shall be mobile and maneuverable to the extent that straight lines can be followed and normal curves can be made in a true arc. The equipment used for the placement of thermoplastic pavement markings shall be of two general types: mobile applicator and portable applicator.

a. Mobile Application Equipment: The mobile applicator shall be defined as a truck-mounted, self-contained pavement marking machine that is capable of hot applying thermoplastic by either the extrusion or spray method. The unit shall be equipped to apply the thermoplastic marking material at temperatures exceeding 375 degrees F, at widths varying from 3 to 12 inches and in thicknesses varying from 0.020 to 0.190 inch and shall have an automatic drop-on bead system. The mobile unit shall be capable of operating continuously and of installing a minimum of 20,000 lineal feet of longitudinal markings in a 8-hour day.

(1) The mobile unit shall be equipped with a melting kettle of such capacity as to hold a minimum of 6000 pounds of molten

thermoplastic material. The kettle shall be capable of heating the thermoplastic composition to temperatures of 375 to 425 degrees F. The heating mechanism shall be by means of a thermostatically controlled heat transfer liquid. Heating of the composition by direct flame shall not be allowed. Oil and material temperature gauges shall be visible at both ends of the kettle. [The mobile unit shall be equipped with a minimum of two extrusion shoes located one on each side of the truck, and shall be capable of marking simultaneous edgeline and centerline stripes. Each extrusion shoe shall be a closed, oil-jacketed unit; shall hold the molten thermoplastic at a temperature of 375 to 425 degrees F; and shall be capable of extruding a line of 3 to 8 inches in width; and at a thickness of not less than 0.125 inch nor more than 0.190 inch, and of generally uniform cross section.] [The mobile unit shall be equipped with a spray gun system. The spray system shall consist of a minimum of four spray guns, located two on each side of the truck, and shall be capable of marking simultaneous edgeline and centerline stripes. The spray system shall be surrounded (jacketed) with heating oil so as to maintain the molten thermoplastic at a temperature of 375 to 425 degrees F; and shall be capable of spraying a stripe of 3 to 12 inches in width, and in thicknesses varying from 0.055 inch to 0.095 inch, and of generally uniform cross section.]

(2) The mobile unit shall be equipped with an electronic programmable line pattern control system. The control system shall be capable of applying skip or solid lines in any sequence, through any and all of the extrusion shoes, or the spray guns, and in programmable cycle lengths. In addition, the mobile unit shall be equipped with an automatic counting mechanism capable of recording the number of lineal feet of thermoplastic markings applied to the pavement surface with an accuracy of 0.5 percent.

b. Portable Application Equipment: The portable applicator shall be defined as hand-operated equipment, specifically designed for placing special markings such as crosswalks, stopbars, legends, arrows, and short lengths of lane, edge and centerlines. The portable applicator shall be capable of applying thermoplastic pavement markings by the extrusion method. It is intended that the portable applicator will be loaded with hot thermoplastic composition from the melting kettles on the mobile applicator. The portable applicator shall be equipped with all the necessary components, including a materials storage reservoir, bead dispenser, extrusion shoe, and heating accessories, so as to be capable of holding the molten thermoplastic at a temperature of 375 to 425 degrees F, of extruding a line of 3 to 12 inches in width, and in thicknesses of not less than 0.125 inch nor more than 0.190 inch and of generally uniform cross section.

1.4.3 Reflective Media Dispenser

The dispenser for applying the reflective media shall be attached to the paint dispenser and operate automatically and simultaneously with the applicator through the same control mechanism. The dispenser shall be capable of adjustment and designed to provide uniform flow of reflective media over the full length and width of the stripe at the rate of coverage specified in paragraph APPLICATION at all operating speeds of the applicator to which it is attached.

1.4.4 Preformed Tape Application Equipment

Mechanical application equipment shall be used for the placement of preformed marking tape. Mechanical application equipment shall be defined as a mobile pavement marking machine specifically designed for use in applying precoated, pressure-sensitive pavement marking tape of varying widths, up to 12 inches. The applicator shall be equipped with rollers, or other suitable compactive device, to provide initial adhesion of the preformed, pressure-sensitive marking tape with the pavement surface. Additional hand-operated rollers shall be used as required to properly seat the thermoplastic tape.

1.4.5 Surface Preparation Equipment

1.4.5.1 Sandblasting Equipment

Sandblasting equipment shall include an air compressor, hoses, and nozzles of proper size and capacity as required for cleaning surfaces to be painted. The compressor shall be capable of furnishing not less than 150 cfm of air at a pressure of not less than 90 psi at each nozzle used, and shall be equipped with traps that will maintain the compressed air free of oil and water.

1.4.5.2 Waterblast Equipment

The water pressure shall be specified at 2600 psi at 140 degrees F in order to adequately clean the surfaces to be marked.

1.4.6 Traffic Controls

Suitable warning signs shall be placed near the beginning of the worksite and well ahead of the worksite for alerting approaching traffic from both directions. Small markers shall be placed along newly painted lines or freshly placed raised markers to control traffic and prevent damage to newly painted surfaces or displacement of raised pavement markers. Painting equipment shall be marked with large warning signs indicating slow-moving painting equipment in operation.

1.5 HAND-OPERATED, PUSH-TYPE MACHINES

All machines, tools, and equipment used in performance of the work shall be approved and maintained in satisfactory operating condition. Hand-operated push-type machines of a type commonly used for application of paint to pavement surfaces shall be acceptable for marking small streets and parking areas. Applicator machine shall be equipped with the necessary paint tanks and spraying nozzles, and shall be capable of applying paint uniformly at coverage specified. Sandblasting equipment shall be provided as required for cleaning surfaces to be painted. Hand-operated spray guns shall be provided for use in areas where push-type machines cannot be used.

PART 2 PRODUCTS

2.1 PAINT

The paint shall be homogeneous, easily stirred to smooth consistency, and shall show no hard settlement or other objectionable characteristics during a storage period of 6 months. Paints for airfields shall conform to FS TT-P-1952, color as shown in the task order. Paint for roads and streets

shall conform to AASHTO M 248, color as indicated . Pavement marking paints shall comply with applicable state and local laws enacted to ensure compliance with Federal Clean Air Standards. Paint materials shall conform to the restrictions of the local Air Pollution Control District.

2.2 PREFORMED TAPE

The preformed tape shall be an adherent reflectorized strip in accordance with ASTM D 4505 Type I or IV, Class optional.

2.3 RAISED REFLECTIVE MARKERS

Either metallic or nonmetallic markers of the button or prismatic reflector type may be used. Markers shall be of permanent colors as specified for pavement marking, and shall retain the color and brightness under the action of traffic. Button markers shall have a diameter of not less than 4 inches, and shall be spaced not more than 40 feet apart on solid longitudinal lines. Broken centerline marker spacings shall be in segments indicated with gaps indicated between segments. Markers shall have rounded surfaces presenting a smooth contour to traffic and shall not project more than 3/4 inch above level of pavement. Pavement markers and adhesive epoxy shall conform to ASTM D 4280.

2.4 REFLECTIVE MEDIA

Reflective media for roads and streets shall conform to FS TT-B-1325, Type I, Gradation A, or AASHTO M 247, Type I.

PART 3 EXECUTION

3.1 SURFACE PREPARATION

Surfaces to be marked shall be thoroughly cleaned before application of the pavement marking material. Dust, dirt, and other granular surface deposits shall be removed by sweeping, blowing with compressed air, rinsing with water or a combination of these methods as required. Rubber deposits, surface laitance, existing paint markings, and other coatings adhering to the pavement shall be completely removed with scrapers, wire brushes, sandblasting, approved chemicals, or mechanical abrasion as directed. Areas of old pavement affected with oil or grease shall be scrubbed with several applications of trisodium phosphate solution or other approved detergent or degreaser, and rinsed thoroughly after each application. After cleaning, oil-soaked areas shall be sealed with cut shellac to prevent bleeding through the new paint. Pavement surfaces shall be allowed to dry, when water is used for cleaning, prior to striping or marking. Surfaces shall be recleaned, when work has been stopped due to rain.

3.1.1 Cleaning Existing Pavement Markings

In general, markings shall not be placed over existing pavement marking patterns. Existing pavement markings that are in good condition that interfere with or conflict with the newly applied marking patterns shall be removed. Deteriorated or obscured markings that are not misleading or confusing or interfere with the adhesion of the new marking material do not require removal. Whenever grinding, scraping, sandblasting or other operations are performed the work must be conducted in such a manner that the finished pavement surface is not damaged or left in a pattern that is misleading or confusing. When these operations are completed the pavement

surface shall be blown off with compressed air to remove residue and debris resulting from the cleaning work.

3.2 APPLICATION

All pavement markings and patterns shall be placed as shown on the plans.

3.2.1 Paint

Paint shall be applied to clean, dry surfaces, and only when air and pavement temperatures are above 40 degrees F and less than 95 degrees F. Paint temperature shall be maintained within these same limits. New asphalt pavement surfaces and new portland concrete cement shall be allowed to cure for a period of not less than 30 days before applications of paint. Paint shall be applied pneumatically with approved equipment at rate of coverage specified herein. The Contractor shall provide guide lines and templates as necessary to control paint application. Special precautions shall be taken in marking numbers, letters, and symbols. Edges of markings shall be sharply outlined.

3.2.1.1 Rate of Application

Reflective Markings: Pigmented binder shall be applied evenly to the pavement area to be coated at a rate of 105 plus or minus 5 square feet per gallon. Glass spheres shall be applied uniformly to the wet paint on road and street pavement at a rate of 6 plus or minus 0.5 pounds of glass spheres per gallon of paint.

Nonreflective Markings: Paint shall be applied evenly to the pavement surface to be coated at a rate of 105 plus or minus 5 square feet per gallon.

3.2.1.2 Drying

The maximum drying time requirements of the paint specifications will be strictly enforced to prevent undue softening of bitumen, and pickup, displacement, or discoloration by tires of traffic. If there is a delay in drying of the markings, painting operations shall be discontinued until cause of the slow drying is determined and corrected.

3.2.2 Preformed Tape

The pavement surface temperature shall be a minimum of 60 degrees F and the ambient temperature shall be a minimum of 60 degrees F and rising. The preformed markings shall be placed in accordance with the manufacturer's written instructions.

3.2.3 Raised Reflective Markers

Prefabricated markers shall be aligned carefully at the required spacing and permanently fixed in place by means of epoxy resin adhesives. To insure good bond, pavement in areas where markers will be set shall be thoroughly cleaned by sandblasting and use of compressed air prior to applying adhesive.

3.2.4 Reflective Media

Application of reflective media shall immediately follow application of pigmented binder. Drop-on application of glass spheres shall be

accomplished to insure that reflective media is evenly distributed at the specified rate of coverage. Should there be malfunction of either paint applicator or reflective media dispenser, operations shall be discontinued immediately until deficiency is corrected.

-- End of Section --

SECTION TABLE OF CONTENTS

DIVISION 02 - SITE WORK

SECTION 02581

PAVEMENT MARKINGS (EDWARDS AFB) PAINT, WATERBORNE TRAFFIC LINE WHITE, YELLOW AND BLACK

PART 1 GENERAL

1.1 SPECIFICATIONS AND STANDARDS
1.2 UNIT PRICES
1.2 Measurement
1.3 Payment
1.4 NOTES
1.4.1 Certification of Compliance
1.5 QUALIFIED PRODUCTS LIST (QPL)
1.5.1 Paint Samples
1.5.2 Qualification Testing and Evaluation

PART 2 PRODUCTS

2.1 REQUIREMENTS
2.1.1 General
2.1.1.1 Pre-Bid Qualifications
2.2 COMPOSITION
2.3 CHARACTERISTICES OF THE FINISHED PAINT
2.3.1 Condition in the Container
2.4 ALLOWABLE VARIATIONS
2.5 QUALITY ASSURANCE PROVISIONS
2.5.1 Inspection
2.6 PREPARATION FOR DELIVERY
2.6.1 Packaging
2.6.2 Marking

PART 3 EXECUTION

3.1 WORKMANSHIP
3.1.1 Foreign Materials
3.1.2 Pigment
3.1.3 Properties
3.1.4 Air Pollution Controls

-- End of Section Table of Contents --

SECTION 02581

PAVEMENT MARKINGS (EDWARDS AFB) PAINT, WATERBORNE TRAFFIC LINE WHITE, YELLOW AND BLACK

PART 1 GENERAL

1.1 SPECIFICATIONS AND STANDARDS

The following Specifications, Test Methods, and Standards in effect on the opening date of the Invitation for Bid form a part of this Specification where referenced.

AMERICAN SOCIETY FOR TESTING AND MATERIALS (ASTM)

ASTM D75	(1997) Standard Practice for Sampling Aggregates
ASTM D93	(1999) Standard Test Methods for Flash-point by Pensky-Martens Closed Cup Tester
ASTM D522	(1993a) Standard Test Methods for Mandrel Bend Test of Attached Organic Coatings
ASTM D562	(1997 E) Standard Test Method for Consistency of Paints Using the Stormer Viscometer
ASTM D711	(1998) Standard Test Method for No-Pick-Up Time of Traffic Paint
ASTM D713	(1998) Standard Practice for Conducting Road Service Tests on Fluid Traffic Marking Materials
ASTM D1210	(1996) Standard Test Method for Fineness of Dispersion of Pigment-Vehicle Systems by Hegman-Type Gage
ASTM D1475	(1998) Standard Test Method for Density of Liquid Coatings, Inks, and Related Products
ASTM D1640	(1995) Standard Test Methods for Drying, Curing, or Film Formation of Organic Coatings at Room Temperature
ASTM D2369	(1998) Standard Test Method for Volatile Content of Coatings
ASTM D2486	(1996) Standard Test Methods for Scrub Resistance of Wall Paints
ASTM D3186	(1995) Standard Test Methods for Rubber Evaluation of SBR (Styrene-Butadiene Mixed With Carbon Black or Carbon Black and Oil

ASTM D3335	(1999) Standard Test Method for Low Concentrations of Lead, Cadmium, and Cobalt in Paint by Atomic Absorbtion Spectroscopy
ASTM D3718	1999) Standard Test Methods for Low Concentrations of Chromium in Paint by Atom Absorption Spectroscopy
ASTM D3723	(1999) Standard Test Method for Pigment Content of Water Emulsion Paints by Low Temperature Ashing
ASTM D3960	(1998) Standard Practice for Determining Volatile Organic Compound (VOC) Content of Paints and Related Coatings
ASTM D5380	(1998) Standard Test Method for Identification of Crystalline Pigments and Extenders in Paint by X-Ray Diffraction Analysis
ASTM E70	(1997) Standard Test Method for PH of Aqueous Solutions with the Glass Electrode
ASTM G53	(1996) Standard Test Method for Operating Light and Water Exposure Apparatus (Fluorescent UV-Condensation Type)

STATE OF CALIFORNIA DEPARTMENT OF TRANSPORTATION (CDT)

SPECIFICATION	(1995) Standards

CODE OF FEDERAL REGULATIONS (CFR)

TITLE 49	(1995)Specifications

FEDERAL STANDARDS (FedStd)

FED-STD-595B	(1995) Colors

FEDERAL SPECIFICATIONS (FS)

FS TT-B-1325C	(1993Rev C) Beads (Glass Spheres) Retro-Reflective (Metric)
FS TT-P-1952D	(1994) Paint, Traffic and Airfield Marking, Water Borne

1.2 UNIT PRICES

1.2 Measurement

The unit of measurement for pavement striping shall be based on the quantity of painting and marking to be performed under Line Item 0035. Payment shall be for the number of square feet of reflective and

nonreflective striping or marking actually completed and accepted by the Contracting Officer.

1.3 Payment

The quantities of surface preparation and pavement striping or marking determined as specified in paragraph Measurement will be paid for at the contract unit price for the particular option year Line Items: _035A, "Painting Less than 10,000 SF/Location"; _035B, "Painting More than 10,000 SF/Location"; _035C, "Marking Less than 10,000 SF/Location"; and _035D, "Marking More than 10,000 SF/Location" of the Pricing Schedule. The payment will constitute full compensation for furnishing all labor, materials, tools, equipment, appliances, and doing all work involved in marking pavements. Any striping or markings which are placed without reflective media, when reflective media is required, shall be removed and replaced at no cost to the Government. Striping or markings which do not conform to the alignment and/or location required will be removed and replaced at no cost to the Government.

1.4 NOTES

1.4.1 Certification of Compliance

The manufacturer shall furnish a Certificate of Compliance with each batch of paint, in accordance with the provisions of Section 6-1.07 of the Standard Specification.

1.5 QUALIFIED PRODUCTS LIST (QPL)

1.5.1 Paint Samples

All paint samples submitted will be inspected for compliance with this specification. Paint complying to this specification will be listed on the State of California Qualified Products List for: Paint, Waterborne Traffic Line, White, Yellow and Black. Qualification of a paint does not relieve the manufacturer of his obligation to maintain such quality control assuring that subsequent deliveries of his product will comply with this specification and be identical to sample(s) evaluated. When changes in manufacture are made in products appearing on the Qualified Products List, it is the responsibility of the supplier to immediately notify the Department of Transportation of such changes. Deliveries of the new product shall not be made until the product has been submitted to the Department of Transportation, evaluated and qualified.

1.5.2 Qualification Testing and Evaluation

Qualification testing and evaluation is performed by the Transportation Laboratory. Venders seeking qualification must submit samples of the paint and the following information to the Transportation Laboratory, Chemistry Section, 5900 Folsom Blvd., Sacramento, CA 95819-0128.

Material Safety Data Sheets.

Test results from a qualified testing laboratory for the batches of paint submitted for qualification.

Legal certificate that states the bid samples represent the designated batch of paint.

A Quality Control plan for the manufacture, testing and shipment of water borne traffic paint. The plan shall detail how the manufacturer will remain within the allowable variances of the selected paint properties. Testing shall be performed by a qualified testing laboratory. The descriptions of the qualified testing laboratory shall include but not be limited to; a description of the lab test equipment, calibration procedures, familiarity with the test methods and qualifications of lab personnel to perform the testing.

Paint submitted must meet all the requirements of this specification. Venders must qualify for white, yellow and black paints, no partial qualification will be allowed.

A minimum of 15 quarts each of white and yellow, and 4 quarts of black are required. If the clean-up and flushing solvent is other than water, the recommended solvent shall be printed on the label. All shipping and transportation charges shall be prepaid by the vendor.

STATE OF CALIFORNIA DEPARTMENT OF TRANSPORTATION

QUALIFIED PRODUCTS LIST (QPL) FOR SPECIFICATION #8010-20B
Paint, Waterborne Traffic Line, White, Yellow and Black

Manufacturer	Manufacturer's Product Code	Color
Pervo Paint Company	6000	White
	6003	Yellow
	6002	Black
	6052	Black
Morton Traffic Markings	28-48-1	White
	28-52-2	Yellow
	2677A7	Black
Ennis Paint Company	EP-CA-301	White
	EP-CA-302	Yellow
	EP-CA-303	Black

PART 2 PRODUCTS

2.1 REQUIREMENTS

2.1.1 General

This Specification is intended to specify paint that will meet service requirements for highway construction and maintenance.

2.1.1.1 Pre-Bid Qualifications

The Department of Transportation maintains a Qualified Products List (QPL) for Waterborne Traffic Line paint. Only those brands and product numbers listed on the QPL will be accepted for State of California purchase and use. Requirements for prequalification, and products currently qualified, are listed in section 1.4.2.

2.2 COMPOSITION

The composition of the paint shall be determined by the manufacturer. However, the paint shall not be manufactured using lead or chromium pigments. It will be the manufacturer's responsibility to produce a pigmented water borne paint containing the necessary co-solvents, dispersants, wetting agents, preservatives and all other additives, so that the paint will retain its viscosity, stability and all other properties as specified herein. No glass beads or sand shall be permitted in the paint formulation.

2.3 CHARACTERISTICES OF THE FINISHED PAINT

2.3.1 Condition in the Container

The paint, as received, shall show no evidence of biological growth, corrosion of the container, livering or hard settling. The paint shall be returned to a smooth and homogeneous consistency, which is exempt of gel structures, persistent foam or air bubbles, by had mixing.

	White	Yellow	Black
A) Consistency, K.U. at 25±1 C ASTM D562	75-90	75-90	75-90
B) Fineness of Dispersion, Hegman, minimum, ASTM D1210	3.0	3.0	3.0
C) No-Pick Up Time, without beads, minutes, maximum, ASTM D711	10	10	10
D) Dry through, minutes, maximum	20	20	20

This test may be performed on the same draw down sample as in section 3.3.4. The test is the same as outlined in ASTM D1640 except that the lightest thumb pressure possible should be used. The thumb is turned through an angle of 90 degrees while lightly in contact with the film. The drying time at which this rotation does not break the film is recorded.

	White	Yellow	Black
E) Dry Through, 90% Relative Humidity, minutes, maximum	180	180	

Draw down the paint on a glass panel to a wet film thickness of Immediately place the panel in a humidity chamber maintained at 23±2 C and 90±5% relative humidity. Test in accordance with ASTM D1640 except that the pressure exerted shall be the minimum needed to maintain contact between the thumb and the film. Check the film for a dry through condition at 15 minute intervals.

	White	Yellow	Black
F) Volatile Organic Compounds (VOC), grams per liter of paint, excluding water, maximum.	150	150	150

Use ASTM D3960 or other approved method in effect at the time of paint manufacture to determine the VOC level and water content of the paint.

	White	Yellow	Black
G) Flashpoint, ASTM D93 Method A, minimum, C	38	38	38

	White	Yellow	Black
H) Flexibility, ASTM D522	Pass	Pass	Pass

Method B

Use 100 x 150 mm tin-plated steel panels 250 mm thick. Prepare the panel by lightly buffing one side with Grade 0 (medium-fine) steel wool, followed by cleaning with toluene and drying. Draw down the paint on the buffed side of the panel to a wet film thickness of 130 mm. Air dry the panel for 24 hours at standard conditions, then bake for 5 hours at 105±2 C and finally condition the panel for 30 minutes at standard conditions. Bend 180 over a 13 mm mandrel and examine under a magnification of 10 diameters. The paint film shall not crack, chip or flake when the panel is bent around the mandrel.

	White	Yellow	Black
I) Appearance	Pass	Pass	Pass

Draw down a 330 mm thick wet film of the paint on a glass plate and allow to dry for 24 hours at standard conditions. The paint shall produce a film which is smooth, uniform, free from; grit, undispersed particles. Craters, pinholes and cracking.

	White	Yellow	Black
J) Dry Opacity, minimum	0.90	0.85	1.0

On a black-white Leneta chart, Form 2C-Opacity, draw down a 130 mm thick wet film of paint covering both the black and white portions of the chart. Dry for 24 hours at standard conditions. Use a Photovolt Reflection Meter, Model 670 or equivalent, with Model 610 T Search Unit provided with Tristimulus filters; green, blue and amber. Calibrate according to the manufacturer's instructions and measure the reflectance over the white and black portions with the green filter. Dry Opacity is calculated as:

$$\frac{\text{Reflectance over black}}{\text{Reflectance over white}} = \text{Dry Opacity}$$

	White	Yellow	Black
K) Yellowness Index, maximum	8	-	-

Draw down a 330 mm thick wet film on two 75 x 150 mm chromate treated aluminum panels. Dry for 24 hours at standard conditions. Save one panel for the Accelerated Weathering test (section 2.3.1 O)). Using a Reflection Meter, measure the reflectance of the white paint film using the green, blue and amber tristimulus filters. Follow the manufacturer's instructions to recalibrate the Reflection Meter as the filters are changed. Calculate the Yellowness Index as follows:

$$\text{Yellowness Index} = \frac{\text{Amber - Blue}}{\text{Green}} \times 100$$

	White	Yellow	Black
L) Daylight Luminous Reflectance	86 min.	50-60	-

With the same draw down as in section 2.3.1 K) above, measure the reflectance of the white and yellow paint films using the Reflection Meter and the green tristimulus filter.

M) Yellow Color

Draw down the yellow paint on two chromate treated aluminum panels as described in section 2.3.1 K). One panel should be used for the

Accelerated Weathering test section 2.3.1 O). Retain the other yellow panel as a control and for the Reflectance test (section 2.3.1 L)). The yellow color shall match 595b, color #33538 and shall lie within the chromaticity coordinate limits as defined below when tested according to California Test Method No. 660 and plotted on a C.I.E. (1931) chromaticity Diagram. The yellow color shall lie within these chromaticity coordinate limits both before and after the Accelerated Weathering test.

Measurement conditions: 2 /Illuminant "C"
Hue: 580 to 583.5 nm
Minimum color saturation: x=0.7000-0.5000y
Brightness: Y=50 to 60

N) Black Color

Draw down the black paint on a chromate treated aluminum panel as described in section 2.3.1 K). After drying for 24 hours at standard conditions the color shall closely match 595b, color #37038.

O) Accelerated Weathering Test
Ultraviolet Light and Condensate Exposure, ASTM G53. 300 hours total.

Prepare samples of the white and yellow paints as described in section Alternately expose the samples to four hours of UV exposure at 60 C, followed by four hours condensate exposure at 40 C. Type FS-40 (UV-B) bulbs are used at an irradiance level of 0.47 watts per square meter at 310 mm, as measured a the sample surface during the UV cycle. After 300 hours total exposure the paint samples shall meet the requirements below. Retain these samples for the Scrub Resistance test (see section 2.3.1 P)).

White - Yellowness Index, maximum, 12 (see section 2.3.1 K))
Yellow - Must pass Yellow Color test (see section 2.3.1 M))

	White	Yellow	Black
P) Scrub Resistance, cycles, minimum	500	500	-

Follow the procedure in ASTM D2486 modified to use the exposed 75 x 150 mm panels from the Accelerated Weathering test (section 2.3.1 O)). Tape the aluminum sample panel to the scrub machine with its 75 mm length parallel to the axis of scrubbing and laying in the path of the oscillating scrub brush. No shim should be used. The paint shall not wear through on any part of the paint film in less than 500 cycles.

	White	Yellow	Black
Q) Roadway Service Durability Rating, minimum ASTM D713, after 180 days exposure	6	6	-

Test stripes shall be applied transversely across the pavement in accordance with ASTM D713. Paints shall be applied and tested on both portland cement concrete and asphalt concrete pavements.

Dry paint film thickness of the test stripes shall be between 130 and 200 mm as determined from test panels taken during application. Current State Specification glass beads (moisture-proof type) shall be applied immediately after the paint and during the same striping operation. The paint film shall accept the glass beads so that the spheres are embedded into the film to a depth of 60% of their diameter. Test stripes will be observed for a period of 180 days from the date of application.

After 180 days of service, the durability of the test stripes will be rated from 0 to 10 in accordance with ASTM D713. Only those test stripes with a rating of 6 or better will be accepted. Glass beads shall have good retention to the test line. This is determined by close-up examination of the test line.

This Roadway Service Durability Rating may be waived at the option of the Engineer or evaluated for a period of less than 180 days.

	White	Yellow	Black
R) Lead, mg/kg in dried paint, maximum, ASTM D3335	100	100	100

	White	Yellow	Black
S) Chromium, mg/kg in dried paint, maximum, ASTM D3718	50	50	50

	White	Yellow	Black
T) Thick Application Cracking Resistance	Pass	Pass	Pass

On a black-white Leneta chart, Form 2C-Opacity, draw down a stripe of the paint 75 mm wide and at least 150 mm long and having a 1530 ±130 mm wet film thickness. Allow the paint to dry for 48 hrs. at standard conditions on a horizontal surface. After 48 hrs. the paint film shall not contain any cracks.

	White	Yellow	Black
U) Accelerated Package Stability	Pass	Pass	Pass

All a clean 500 mL (1 pint) resin-lined friction-top paint can with a well stirred sample. Immediately close the can tightly. Store this can at a temperature of 52 C for 14 days. Allow the can to cool overnight. Determine the Consistency of the paint as in section 2.2, except allow hand stirring for 5 minutes to ensure uniform redistribution of any settlement. The consistency of the paint shall not change more than 5 K.U. after this heated storage period. Draw down a 330 mm thick wet film of this sample on a glass plate and examine for Appearance as in 2.3.1 I).

2.4 ALLOWABLE VARIATIONS

The following properties will be measured at the time of qualification and again during the delivery of production lots. The composition and properties of the paint must remain within the allowable variations as indicated. If any property falls outside the variances, the batch will be rejected and replaced at the manufacturer's expense.

	White	Yellow	Black
A) Density, g/ml, at 25 C, ASTM D1475 allowable variation from qualifying sample	±0.04	±0.04	±0,04

	White	Yellow	Black
B) Pigment, Weight %, ASTM D3723, allowable variation from qualifying sample	±2.0	±2.0	±2.0

	White	Yellow	Black
C) Nonvolatile Content, Weight %, ASTM D2369 allowable variation from qualifying sample	±2.0	±2.0	±2.0

	White	Yellow	Black
D) Infrared Spectra of Nonvolatile Vehicle ASTM D3186 allowable variation from qualifying sample	None	None	None

	White	Yellow	Black
E) X-Ray Diffraction Scan of Pigments ASTM D5380 allowable variation from qualifying sample	None	None	None

	White	Yellow	Black
F) pH, ASTM E70 allowable variation from qualifying sample	±1.0	±1.0	±1.0

2.5 QUALITY ASSURANCE PROVISIONS

2.5.1 Inspection

Each batch of waterborne traffic paint intended for use by the State of California must be tested by a qualified laboratory and a certified copy of the test results sent to the Transportation laboratory before the material is shipped. See section 1.4.2 for a description of what constitutes a qualified lab. A batch shall be that amount of paint which was manufactured and packaged in a single operation. Information to be included in the test report are: No-Pick Up time, Dry Opacity, Yellowness Index, Reflectance, Consistency, Non-Volatile Weight Percent, Pigment Weight Percent and Density. The first three production batches of each color shall be tested by the Transportation laboratory, as well as the qualified laboratory, and correlation between laboratories must be satisfactory before shipment occurs.

When the first three batches of each color are accepted, the subsequent batches shall be treated as follows. The manufacturer shall send to the Transportation laboratory a representative 1L (one-quart) sample of each batch of paint fro random testing. Test data from these samples shall prevail over all other tests and will be the basis of rejection. Material not meeting the specification shall be removed and replaced by the manufacturer at his expense, including all costs for handling, retesting and shipping.

On the first Monday following shipment of waterborne traffic paint fro any Department of Transportation contract during the previous week, a list of each shipping location including: name and phone number of contact person, colors, batch numbers and quantity of each paint, shall be faxed to the Transportation Laboratory, Chemical Testing Section, 5900 Folsom Blvd., Sacramento, CA 95819-0128, attn: Lisa Dobeck, (916) 227-7280, Fax (916)227-7168.

2.6 PREPARATION FOR DELIVERY

2.6.1 Packaging

All manufactured paint shall be prepared at the factory ready for application. The finished paint shall be furnished in the container size specified in the purchase order or contract.

When 19 liter containers are specified, they shall be round and have standard full open head and bail. If 208 liter steel drums are specified, they must have removable lids and airtight band fasteners.

When bulk containers are required by the purchase order or contract, the paint shall be delivered in a container (tote) meeting the following requirements.

1. Tank volumes are estimated and so specified in each of three (3) Bulk Container drawings dated 09-04-91. Vendor shall allow a 19 liter headspace for expansion of the paint.

2. Maximum size in regards to width, depth and height shall be in accordance with one of the three drawings dated 90-04-91.

3. Top openings; 46 cm diameter manhole and 15 cm diameter fill cap.

4. Bottom outlet; 5 cm I.D. full flow non-restrictive valve with outlet guard.

5. Outlet to have ‘Ever-Tite' or compatible quick coupler.

6. Fabricated from 304 stainless steel.

7. Capable of being stacked two (2) high when full.

8. Capable of being lifted by crane (lifting eye) and forklift when full.

9. Top of tank shall be equipped with one (1) vacuum relief valve and one (1) pressure relief valve.

10. Top opening and outlet shall provide for easy installation of liner.

11. Proper certification by the California Highway Patrol that the container complies with all applicable laws, rules, and regulations.

All shipping containers must comply with Code of Federal Regulations, Title 49 and all other applicable Federal and State Regulations governing their use. The containers and lids must lined with a suitable coating so as to prevent attack by the paint or by agents in the airspace above the paint. The lining must not come off the container or lid as skins.

Containers shall be colored white, including lids, and have an identifying band of the appropriate color around and within the top one-third of the container. Stainless steel containers (totes) do not need to be painted white.

All containers shall be properly sealed with suitable gaskets and shall show no evidence of leakage and shall remain in satisfactory condition for a period of 12 months after delivery. The vendor shall be held responsible for replacing containers unfit for use and will be responsible for all costs and transportation charges incurred in replacing paint and containers.

All containers shall be pelletized and banded for shipment.

2.6.2 Marking

All containers of paint shall be labeled showing the State specification number, manufacturer's name, date of manufacture, color and manufacturer's batch number. Containers shall be clearly labeled " Waterborne Traffic Paint".

All containers of the paint shall be labeled to indicate that the contents fully comply with all rules and regulations concerning air pollution control in the State of California.

The manufacturer of the paint shall be responsible for proper shipping labels with reference to whether the contents are; toxic, corrosive, flammable, etc., as outlined in the Code of Federal Regulations, Title 49.

The Contractor shall list on the Demountable Weight Tags the kilograms

per liter and pounds per gallon each for the white, yellow and black paints.

PART 3 EXECUTION

3.1 WORKMANSHIP

3.1.1 Foreign Materials

The paint shall be free from foreign materials such as; dirt, sand, fibers or other materials capable of clogging; screens, valves, pumps, or other equipment used in paint striping apparatus.

3.1.2 Pigment

The paint pigment shall be well ground and properly dispersed in the vehicle. The pigment shall not cake or thicken in the container and shall not become granular or curdled. Any settlement of the pigment in the paint shall result in a thoroughly wetted, soft mass which permits the complete and easy vertical penetration of a paddle. Settled pigment shall be easily redispersed, with a minimum of resistance to the sidewise manual motion of the paddle across the bottom of the container. This stirring shall return the paint to a smooth uniform product of the proper consistency. If the paint cannot be easily redispersed, due to excessive pigment settlement or any other cause, then the paint shall be considered unfit for use.

3.1.3 Properties

The paint shall retain all specified properties under normal storage conditions for 8 months after acceptance and delivery. The vendor shall be responsible for all costs and transportation charges incurred in replacing paint that is unfit for use. The characteristics of any replacement paint, as specified in section 2.3, shall remain satisfactory for 8 months from the date of acceptance and delivery.

3.1.4 Air Pollution Controls

The paint shall comply with all air pollution control rules and regulations within the State of California in effect at the time the paint is manufactured.

-- End of Section --

SECTION TABLE OF CONTENTS

DIVISION 02 - SITE WORK

SECTION 02630

STORM-DRAINAGE SYSTEM

PART 1 GENERAL

1.1 REFERENCES
1.2 MEASUREMENT AND PAYMENT
1.2.1 Pipe Culverts and Storm Drains
1.2.2 Manholes and Inlets
1.2.3 Trench Drain
1.2.4 Flared End Sections
1.2.5 Raise and Lower Utility Covers
1.2.6 Rock Excavation
1.2.7 Backfill Replacing Unstable Material
1.2.8 Pipe Placed by Jacking
1.3 SUBMITTALS
1.4 DELIVERY, STORAGE, AND HANDLING
1.4.1 Delivery and Storage
1.4.2 Handling

PART 2 PRODUCTS

2.1 PIPE FOR CULVERTS AND STORM DRAINS
2.1.1 Concrete Pipe
2.1.1.1 Nonreinforced Pipe
2.1.2 Corrugated Steel Pipe
2.1.2.1 Fully Bituminous Coated
2.1.3 PVC Pipe
2.1.3.1 Type PSM PVC Pipe
2.1.3.2 Profile PVC Pipe
2.1.3.3 Smooth Wall PVC Pipe
2.1.3.4 Corrugated PVC Pipe
2.2 DRAINAGE STRUCTURES
2.2.1 Precast Reinforced Concrete Box
2.3 MISCELLANEOUS MATERIALS
2.3.1 Concrete
2.3.2 Mortar
2.3.3 Precast Reinforced Concrete Manholes
2.3.4 Frame and Cover for Gratings
2.3.5 Joints
2.3.5.1 External Sealing Bands
2.3.5.2 PVC Plastic Pipes
2.4 STEEL LADDER

PART 3 EXECUTION

3.1 EXCAVATION FOR PIPE CULVERTS, STORM DRAINS, AND DRAINAGE STRUCTURES
3.1.1 Trenching
3.1.2 Removal of Rock

3.1.3 Removal of Unstable Material
3.2 BEDDING
3.2.1 Concrete Pipe Requirements
3.2.2 Corrugated Metal Pipe
3.2.3 Plastic Pipe
3.3 PLACING PIPE
3.3.1 Concrete, PVC, and Ribbed PVC
3.3.2 Elliptical and Elliptical Reinforced Concrete Pipe
3.3.3 Corrugated Metal Pipe and Pipe Arch
3.3.4 Multiple Culverts
3.3.5 Jacking Pipe Through Fills
3.4 JOINTING
3.4.1 Concrete Pipe
3.4.1.1 Cement-Mortar Bell-and-Spigot Joint
3.4.1.2 Cement-Mortar Oakum Joint for Bell-and-Spigot Pipe
3.4.1.3 Cement-Mortar Diaper Joint for Bell-and-Spigot Pipe
3.4.1.4 Cement-Mortar Tongue-and-Groove Joint
3.4.1.5 Cement-Mortar Diaper Joint for Tongue-and-Groove Pipe
3.4.1.6 Plastic Sealing Compound Joints for Tongue-and-Grooved Pipe
3.4.1.7 Flexible Watertight Joints
3.4.1.8 External Sealing Band Joint for Noncircular Pipe
3.4.2 Corrugated Metal Pipe
3.4.2.1 Field Joints
3.5 DRAINAGE STRUCTURES
3.5.1 Manholes and Inlets
3.5.2 Walls and Headwalls
3.6 STEEL LADDER INSTALLATION
3.7 BACKFILLING
3.7.1 Backfilling Pipe in Trenches
3.7.2 Backfilling Pipe in Fill Sections
3.7.3 Movement of Construction Machinery
3.7.4 Compaction
3.7.4.1 General Requirements
3.7.4.2 Minimum Density
3.7.5 Determination of Density

-- End of Section Table of Contents --

SECTION 02630

STORM-DRAINAGE SYSTEM

PART 1 GENERAL

1.1 REFERENCES

The publications listed below form a part of this specification to the extent referenced. The publications are referred to in the text by basic designation only.

ACI INTERNATIONAL (ACI)

ACI 346/346R	(1990) Standard Specification for Cast-in-Place Nonreinforced Concrete Pipe and Recommendations

AMERICAN ASSOCIATION OF STATE HIGHWAY AND TRANSPORTATION OFFICIALS (AASHTO)

AASHTO HB-16	(1996) Standard Specifications for Highway Bridges
AASHTO M 167	(1994) Corrugated Steel Structural Plate, Zinc Coated, for Field Bolted Pipe
AASHTO M 190	(1988) Bituminous Coated Corrugated Metal Culvert Pipe and Pipe Arches
AASHTO M 198	(1994) Joints for Circular Concrete Sewer and Culvert Pipe Using Flexible Watertight Gaskets
AASHTO M 219	(1992) Aluminum Alloy Structural Plate for Field Bolted Conduits
AASHTO M 243	(1994) Field Applied Coating of Corrugated Metal Structural Plate for Pipe, Pipe-Arches, and Arches
AASHTO M 294	(1994) Corrugated Polyethylene Pipe, 305- to 915- mm (12-to 36 in.) Diameter
AASHTO MP6	(1995) Corrugated Polyethylene Pipe 1050 and 1200 mm Diameter

AMERICAN RAILWAY ENGINEERING ASSOCIATION (AREA)

AREA-01	(1997) 1997-1998 Manual for Railway Engineering 4 Vol., Volume 1

AMERICAN SOCIETY FOR TESTING AND MATERIALS (ASTM)

ASTM A 48	(1994a) Gray Iron Castings
ASTM A 123/A 123M	(1997a) Zinc (Hot-Dip Galvanized) Coatings on Iron and Steel Products
ASTM A 536	(1984; R 1993) Ductile Iron Castings
ASTM A 716	(1995) Ductile Iron Culvert Pipe
ASTM A 742/A 742M	(1995) Steel Sheet, Metallic Coated and Polymer Precoated for Corrugated Steel Pipe
ASTM A 760/A 760M	(1997) Corrugated Steel Pipe, Metallic-Coated for Sewers and Drains
ASTM A 762/A 762M	(1997) Corrugated Steel Pipe, Polymer Precoated for Sewers and Drains
ASTM A 798/A 798M	(1997) Installing Factory-Made Corrugated Steel Pipe for Sewers and Other Applications
ASTM A 807	(1996) Installing Corrugated Steel Structural Plate Pipe for Sewers and Other Applications
ASTM A 849	(1996) Post-Applied Coatings, Pavings, and Linings for Corrugated Steel Sewer and Drainage Pipe
ASTM A 929/A 929M	(1996) Steel Sheet, Metallic-Coated by the Hot-Dip Process for Corrugated Steel Pipe
ASTM B 26/B 26M	(1997) Aluminum-Alloy Sand Castings
ASTM B 745/B 745M	(1995) Corrugated Aluminum Pipe for Sewers and Drains
ASTM C 12	(1995) Installing Vitrified Clay Pipe Lines
ASTM C 14	(1995) Concrete Sewer, Storm Drain, and Culvert Pipe
ASTM C 14M	(1995) Concrete Sewer, Storm Drain, and Culvert Pipe (Metric)
ASTM C 32	(1993) Sewer and Manhole Brick (Made from Clay or Shale)
ASTM C 55	(1997) Concrete Building Brick
ASTM C 62	(1997) Building Brick (Solid Masonry Units Made from Clay or Shale)
ASTM C 76	(1997) Reinforced Concrete Culvert, Storm Drain, and Sewer Pipe
ASTM C 76M	(1997) Reinforced Concrete Culvert, Storm Drain, and Sewer Pipe (Metric)

ASTM C 139	(1997) Concrete Masonry Units for Construction of Catch Basins and Manholes
ASTM C 231	(1997) Air Content of Freshly Mixed Concrete by the Pressure Method
ASTM C 270	(1997a) Mortar for Unit Masonry
ASTM C 425	(1997) Compression Joints for Vitrified Clay Pipe and Fittings
ASTM C 443	(1994) Joints for Circular Concrete Sewer and Culvert Pipe, Using Rubber Gaskets
ASTM C 478	(1997) Precast Reinforced Concrete Manhole Sections
ASTM C 478M	(1997) Precast Reinforced Concrete Manhole Sections (Metric)
ASTM C 506	(1995a) Reinforced Concrete Arch Culvert, Storm Drain, and Sewer Pipe
ASTM C 506M	(1995a) Reinforced Concrete Arch Culvert, Storm Drain, and Sewer Pipe (Metric)
ASTM C 507	(1995a) Reinforced Concrete Elliptical Culvert, Storm Drain, and Sewer Pipe
ASTM C 507M	(1995a) Reinforced Concrete Elliptical Culvert, Storm Drain, and Sewer Pipe (Metric)
ASTM C 655	(1995a) Reinforced Concrete D-Load Culvert, Storm Drain, and Sewer Pipe
ASTM C 700	(1997) Vitrified Clay Pipe, Extra Strength, Standard Strength, and Perforated
ASTM C 789	(1995a) Precast Reinforced Concrete Box Sections for Culverts, Storm Drains, and Sewers
ASTM C 828	(1990; R 1996) Low-Pressure Air Test of Vitrified Clay Pipe Lines
ASTM C 850	(1995a) Precast Reinforced Concrete Box Sections for Culverts, Storm Drains, and Sewers with Less Than 2 ft of Cover Subjected to Highway Loadings
ASTM C 877	(1994) External Sealing Bands for Noncircular Concrete Sewer, Storm Drain, and Culvert Pipe
ASTM C 924	(1989; R 1997) Concrete Pipe Sewer Lines by Low-Pressure Air Test Method

ASTM C 1103	(1994) Joint Acceptance Testing of Installed Precast Concrete Pipe Sewer Lines
ASTM C 1103M	(1994) Joint Acceptance Testing of Installed Precast Concrete Pipe Sewer Lines (Metric)
ASTM D 1056	(1991) Flexible Cellular Materials - Sponge or Expanded Rubber
ASTM D 1171	(1994) Rubber Deterioration - Surface Ozone Cracking Outdoors or Chamber (Triangular Specimens)
ASTM D 1557	(1991) Laboratory Compaction Characteristics of Soil Using Modified Effort (56,000 ft-lbf/cu. ft. (2,700 kN-m/cu.m.))
ASTM D 1751	(1983; R 1991) Preformed Expansion Joint Filler for Concrete Paving and Structural Construction (Nonextruding and Resilient Bituminous Types)
ASTM D 1752	(1984; R 1996) Preformed Sponge Rubber and Cork Expansion Joint Fillers for Concrete Paving and Structural Construction
ASTM D 1784	(1997) Rigid Poly(Vinyl Chloride) (PVC) Compounds and Chlorinated Poly(Vinyl Chloride) (CPVC) Compounds
ASTM D 2167	(1994) Density and Unit Weight of Soil in Place by the Rubber Balloon Method
ASTM D 2321	(1989; R 1995) Underground Installation of Thermoplastic Pipe for Sewers and Other Gravity-Flow Applications
ASTM D 2922	(1996) Density of Soil and Soil-Aggregate in Place by Nuclear Methods (Shallow Depth)
ASTM D 3017	(1996) Water Content of Soil and Rock in Place by Nuclear Methods (Shallow Depth)
ASTM D 3034	(1994) Type PSM Poly(Vinyl Chloride) (PVC) Sewer Pipe and Fittings
ASTM D 3212	(1996a) Joints for Drain and Sewer Plastic Pipes Using Flexible Elastomeric Seals
ASTM D 3350	(1996) Polyethylene Plastics Pipe and Fittings Materials
ASTM F 477	(1995) Elastomeric Seals (Gaskets) for Joining Plastic Pipe
ASTM F 679	(1995) Poly(Vinyl Chloride) (PVC) Large-Diameter Plastic Gravity Sewer Pipe

	and Fittings
ASTM F 714	(1994) Polyethylene (PE) Plastic Pipe (SDR-PR) Based on Outside Diameter
ASTM F 794	(1995a) Poly(Vinyl Chloride) (PVC) Profile Gravity Sewer Pipe and Fittings Based on Controlled Inside Diameter
ASTM F 894	(1995) Polyethylene (PE) Large Diameter Profile Wall Sewer and Drain Pipe
ASTM F 949	(1994) Poly(Vinyl Chloride) (PVC) Corrugated Sewer Pipe with a Smooth Interior and Fittings
ASTM F 1417	(1992) Installation Acceptance of Plastic Gravity Sewer Lines Using Low-Pressure Air

1.2 MEASUREMENT AND PAYMENT

1.2.1 Pipe Culverts and Storm Drains

The length of pipe installed will be measured along the centerlines of the pipe from end to end of pipe without deductions for diameter of manholes. Pipe will be paid for at the contract unit price for the number of linear feet of culverts or storm drains placed in the accepted work. Payment shall be for the base year Line Item Headings; 0016, "REMOVE/REPLACE CULVERTS" and 0017 "INSTALL NEW CULVERTS" of the Pricing Schedule. Included in the compensation price is all earthwork as specified in Section 02316 EXCAVATION, TRENCHING, AND BACKFILLING FOR UTILITIES SYSTEMS.

1.2.2 Manholes and Inlets

The quantity of manholes and inlets will be measured as the total number of manholes and inlets of the various types of construction, complete with frames and gratings or covers and, where indicated, with fixed side-rail ladders, constructed to the depth required. The depth of manholes and inlets will be measured from the top of grating or cover to invert of outlet pipe. Payment shall be negotiated. Included in the compensation price will be all earthwork as specified in Section 02316 EXCAVATION, TRENCHING, AND BACKFILLING FOR UTILITIES SYSTEMS.

1.2.3 Trench Drain

Trench drains will be measured by the number of Linear feet of of trench drain constructed and accepted. Payment shall be negotiated. Included in the compensation price will be all earthwork specified in Section 02316 EXCAVATION, TRENCHING, AND BACKFILLING FOR UTILITIES SYSTEMS.

1.2.4 Flared End Sections

Flared metal end sections will be measured for each unit except for concrete pads which are specified in Section 02754 CONCRETE PAVEMENTS FOR SMALL PROJECTS. Flared end sections will be paid for at the contract unit price for the various sizes For the base year Line Items; 0013AG, "FLARED HEADWALL 24 INCHES" and 0013AH, "FLARED HEADWALL 30 INCHES" of the Pricing Schedule. Concrete pads shall be paid for under the base year Line Item 0013AI, "CONCRETE PADS" of the Pricing Schedule. Included in the

compensation price is all earthwork as specified in Section 02316 EXCAVATION, TRENCHING, AND BACKFILLING FOR UTILITIES SYSTEMS.

1.2.5 Raise and Lower Utility Covers

Payment will be made for each utility cover raised or lowered under the base year Line Item 0019, "RAISE/LOWER UTILITY COVERS" of the Pricing Schedule. Included in the compensation price is all repaving and any earthwork specified in other Contract Specifications.

1.2.6 Rock Excavation

Payment will be made for the number of cubic yards of material acceptably excavated, as specified and defined as rock excavation in Section 02316 EXCAVATION, TRENCHING, AND BACKFILLING FOR UTILITIES SYSTEMS.

1.2.7 Backfill Replacing Unstable Material

Payment will be made for the number of cubic yards of material acceptably replaced as specified and defined for unstable material in Section 02316 EXCAVATION, TRENCHING, AND BACKFILLING FOR UTILITIES SYSTEMS.

1.2.8 Pipe Placed by Jacking

No additional compensation shall be forthcoming for boring and jacking operations.

1.3 SUBMITTALS

Government approval is required for submittals with a "GA" designation; submittals having an "FIO" designation are for information only. The following shall be submitted in accordance with Section 01330 SUBMITTAL PROCEDURES:

SD-06 Instructions

Placing Pipe; FIO.

Printed copies of the manufacturer's recommendations for installation procedures of the material being placed, prior to installation.

SD-13 Certificates

Determination of Density; FIO. Frame and Cover for Gratings; FIO.

Certified copies of test reports demonstrating conformance to applicable pipe specifications, before pipe is installed. Certification on the ability of frame and cover or gratings to carry the imposed live load.

SD-14 Samples

Pipe for Culverts and Storm Drains; FIO.

1.4 DELIVERY, STORAGE, AND HANDLING

1.4.1 Delivery and Storage

Materials delivered to site shall be inspected for damage, unloaded, and

stored with a minimum of handling. Materials shall not be stored directly on the ground. The inside of pipes and fittings shall be kept free of dirt and debris. Before, during, and after installation, plastic pipe and fittings shall be protected from any environment that would result in damage or deterioration to the material. The Contractor shall have a copy of the manufacturer's instructions available at the construction site at all times and shall follow these instructions unless directed otherwise by the Contracting Officer. Solvents, solvent compounds, lubricants, elastomeric gaskets, and any similar materials required to install plastic pipe shall be stored in accordance with the manufacturer's recommendations and shall be discarded if the storage period exceeds the recommended shelf life. Solvents in use shall be discarded when the recommended pot life is exceeded.

1.4.2 Handling

Materials shall be handled in a manner that ensures delivery to the trench in sound, undamaged condition. Pipe shall be carried to the trench, not dragged.

PART 2 PRODUCTS

2.1 PIPE FOR CULVERTS AND STORM DRAINS

Pipe for culverts and storm drains shall be of the sizes indicated and shall conform to the requirements specified.

2.1.1 Concrete Pipe

ASTM C 76, Class I.

2.1.1.1 Nonreinforced Pipe

ASTM C 14, Class 2.

2.1.2 Corrugated Steel Pipe

ASTM A 760/A 760M, zinc coated,aluminum coated oraluminum-zinc alloy coated pipe of:

a. Type I pipe with annular corrugations.

2.1.2.1 Fully Bituminous Coated

AASHTO M 190 Type A and ASTM A 760/A 760M [zinc coated] [aluminum coated] [aluminum-zinc alloy coated] pipe of:

a. Type I pipe with annular corrugations.

2.1.3 PVC Pipe

The pipe manufacturer's resin certification, indicating the cell classification of PVC used to manufacture the pipe, shall be submitted prior to installation of the pipe.

2.1.3.1 Type PSM PVC Pipe

ASTM D 3034, Type PSM, maximum SDR 35, produced from PVC certified by the compounder as meeting the requirements of ASTM D 1784, minimum cell class

12454-B.

2.1.3.2 Profile PVC Pipe

ASTM F 794, Series 46, produced from PVC certified by the compounder as meeting the requirements of ASTM D 1784, minimum cell class 12454-B.

2.1.3.3 Smooth Wall PVC Pipe

ASTM F 679 produced from PVC certified by the compounder as meeting the requirements of ASTM D 1784, minimum cell class 12454-B.

2.1.3.4 Corrugated PVC Pipe

ASTM F 949 produced from PVC certified by the compounder as meeting the requirements of ASTM D 1784, minimum cell class 12454-B.

2.2 DRAINAGE STRUCTURES

2.2.1 Precast Reinforced Concrete Box

For highway loadings with 2 feet of cover or more or subjected to dead load only, ASTM C 789; for less than 2 feet of cover subjected to highway loading, ASTM C 850.

2.3 MISCELLANEOUS MATERIALS

2.3.1 Concrete

Unless otherwise specified, concrete and reinforced concrete shall conform to the requirements for 3,000 psi. The concrete mixture shall have air content by volume of concrete, based on measurements made immediately after discharge from the mixer, of 5 to 7 percent when maximum size of coarse aggregate exceeds 1-1/2 inches. Air content shall be determined in accordance with ASTM C 231. The concrete covering over steel reinforcing shall not be less than 1 inch thick for covers and not less than 1-1/2 inches thick for walls and flooring. Concrete covering deposited directly against the ground shall have a thickness of at least 3 inches between steel and ground. Expansion-joint filler material shall conform to ASTM D 1751, or ASTM D 1752, or shall be resin-impregnated fiberboard conforming to the physical requirements of ASTM D 1752.

2.3.2 Mortar

Mortar for pipe joints, connections to other drainage structures, and brick or block construction shall conform to ASTM C 270, Type M, except that the maximum placement time shall be 1 hour. The quantity of water in the mixture shall be sufficient to produce a stiff workable mortar. Water shall be clean and free of harmful acids, alkalies, and organic impurities. The mortar shall be used within 30 minutes after the ingredients are mixed with water. The inside of the joint shall be wiped clean and finished smooth. The mortar head on the outside shall be protected from air and sun with a proper covering until satisfactorily cured.

2.3.3 Precast Reinforced Concrete Manholes

Precast reinforced concrete manholes shall conform to ASTM C 478. Joints between precast concrete risers and tops shall be full-bedded in cement mortar and shall be smoothed to a uniform surface on both interior and

exterior of the structure.

2.3.4 Frame and Cover for Gratings

Frame and cover for gratings shall be cast gray iron, ASTM A 48, Class 35B; cast ductile iron, ASTM A 536, Grade 65-45-12; or cast aluminum, ASTM B 26/B 26M, Alloy 356.OT6. Weight, shape, size, and waterway openings for grates and curb inlets shall be as indicated on the plans Gratings shall be bicycle proof.

2.3.5 Joints

2.3.5.1 External Sealing Bands

Requirements for external sealing bands shall conform to ASTM C 877.

2.3.5.2 PVC Plastic Pipes

Joints shall be solvent cement or elastomeric gasket type in accordance with the specification for the pipe and as recommended by the pipe manufacturer.

2.4 STEEL LADDER

Steel ladder shall be provided where the depth of the manhole exceeds 12 feet. These ladders shall be not less than 16 inches in width, with 3/4 inch diameter rungs spaced 12 inches apart. The two stringers shall be a minimum 3/8 inch thick and 2-1/2 inches wide. Ladders and inserts shall be galvanized after fabrication in conformance with ASTM A 123/A 123M.

PART 3 EXECUTION

3.1 EXCAVATION FOR PIPE CULVERTS, STORM DRAINS, AND DRAINAGE STRUCTURES

Excavation of trenches, and for appurtenances and backfilling for culverts and storm drains, shall be in accordance with the applicable portions of Section 02316 EXCAVATION, TRENCHING, AND BACKFILLING FOR UTILITIES SYSTEMS and the requirements specified below.

3.1.1 Trenching

The width of trenches at any point below the top of the pipe shall be not greater than the outside diameter of the pipe plus 8 inches to permit satisfactory jointing and thorough tamping of the bedding material under and around the pipe. Sheeting and bracing, where required, shall be placed within the trench width as specified. Contractor shall not overexcavate. Where trench widths are exceeded, redesign with a resultant increase in cost of stronger pipe or special installation procedures will be necessary. Cost of this redesign and increased cost of pipe or installation shall be borne by the Contractor without additional cost to the Government.

3.1.2 Removal of Rock

Rock in either ledge or boulder formation shall be replaced with suitable materials to provide a compacted earth cushion having a thickness between unremoved rock and the pipe of at least 8 inches or 1/2 inch for each foot of fill over the top of the pipe, whichever is greater, but not more than three-fourths the nominal diameter of the pipe. Where bell-and-spigot pipe is used, the cushion shall be maintained under the bell as well as under

the straight portion of the pipe. Rock excavation shall be as specified and defined in Section 02316 EXCAVATION, TRENCHING, AND BACKFILLING FOR UTILITIES SYSTEMS.

3.1.3 Removal of Unstable Material

Where wet or otherwise unstable soil incapable of properly supporting the pipe, as determined by the Contracting Officer, is unexpectedly encountered in the bottom of a trench, such material shall be removed to the depth required and replaced to the proper grade with select granular material, compacted as provided in paragraph BACKFILLING. When removal of unstable material is due to the fault or neglect of the Contractor in his performance of shoring and sheeting, water removal, or other specified requirements, such removal and replacement shall be performed at no additional cost to the government. Unstable material remediation is specified in Section 02316 EXCAVATION, TRENCHING, AND BACKFILLING FOR UTILITIES SYSTEMS.

3.2 BEDDING

The bedding surface for the pipe shall provide a firm foundation of uniform density throughout the entire length of the pipe.

3.2.1 Concrete Pipe Requirements

When no bedding class is specified or detailed on the drawings, concrete pipe shall be bedded in a soil foundation accurately shaped and rounded to conform to the lowest one-fourth of the outside portion of circular pipe or to the lower curved portion of pipe arch for the entire length of the pipe or pipe arch. When necessary, the bedding shall be tamped. Bell holes and depressions for joints shall be not more than the length, depth, and width required for properly making the particular type of joint.

3.2.2 Corrugated Metal Pipe

Bedding for corrugated metal pipe and pipe arch shall be in accordance with ASTM A 798/A 798M. It is not required to shape the bedding to the pipe geometry. However, for pipe arches, the Contractor shall either shape the bedding to the relatively flat bottom arc or fine grade the foundation to a shallow v-shape.

3.2.3 Plastic Pipe

Bedding for PVC and PE pipe shall meet the requirements of ASTM D 2321. Bedding, haunching, and initial backfill shall be either Class IB or II material.

3.3 PLACING PIPE

Each pipe shall be thoroughly examined before being laid; defective or damaged pipe shall not be used. Plastic pipe shall be protected from exposure to direct sunlight prior to laying, if necessary to maintain adequate pipe stiffness and meet installation deflection requirements. Pipelines shall be laid to the grades and alignment indicated. Proper facilities shall be provided for lowering sections of pipe into trenches. Lifting lugs in vertically elongated metal pipe shall be placed in the same vertical plane as the major axis of the pipe. Pipe shall not be laid in water, and pipe shall not be laid when trench conditions or weather are unsuitable for such work. Diversion of drainage or dewatering of trenches

during construction shall be provided as necessary. Deflection of installed flexible pipe shall not exceed the following limits:

TYPE OF PIPE	MAXIMUM ALLOWABLE DEFLECTION (%)
Corrugated Steel	5
Plastic	7.5

Not less than 30 days after the completion of backfilling, the Government may perform a deflection test on the entire length of installed flexible pipe using a mandrel or other suitable device. Installed flexible pipe showing deflections greater than those indicated above shall be retested by a run from the opposite direction. If the retest also fails, the suspect pipe shall be replaced at no cost to the Government.

3.3.1 Concrete, PVC, and Ribbed PVC

Laying shall proceed upgrade with spigot ends of bell-and-spigot pipe and tongue ends of tongue-and-groove pipe pointing in the direction of the flow.

3.3.2 Elliptical and Elliptical Reinforced Concrete Pipe

The manufacturer's reference lines, designating the top of the pipe, shall be within 5 degrees of a vertical plane through the longitudinal axis of the pipe, during placement. Damage to or misalignment of the pipe shall be prevented in all backfilling operations.

3.3.3 Corrugated Metal Pipe and Pipe Arch

Laying shall be with the separate sections joined firmly together, with the outside laps of circumferential joints pointing upstream, and with longitudinal laps on the sides. Any unprotected metal in the joints shall be coated with bituminous material as specified in AASHTO M 190 or AASHTO M 243. Interior coating shall be protected against damage from insertion or removal of struts or tie wires. Lifting lugs shall be used to facilitate moving pipe without damage to exterior or interior coatings. During installation, pipe or pipe arch shall be handled with care to preclude damage to the bituminous coating or paving. Prior to placing backfill, damaged areas of coupling bands and pipe shall be given a coating of bituminous material, as specified in AASHTO M 190 or AASHTO M 243. Pipe on which bituminous coating has been damaged to such an extent that satisfactory field repairs cannot be made shall be removed and replaced. Vertical elongation, where indicated, shall be accomplished by factory elongation. Suitable markings or properly placed lifting lugs shall be provided to ensure placement of factory elongated pipe in a vertical plane.

3.3.4 Multiple Culverts

Where multiple lines of pipe are installed, adjacent sides of pipe shall be at least half the nominal pipe diameter or 3 feet apart, whichever is less.

3.3.5 Jacking Pipe Through Fills

Methods of operation and installation for jacking pipe through fills shall conform to requirements specified in Volume 1, Chapter 1, Part 4 of AREA-01. Any damage to road or utility structures or appurtenant items shall be repaired by the Contractor at no additional cost to the Government.

3.4 JOINTING

3.4.1 Concrete Pipe

3.4.1.1 Cement-Mortar Bell-and-Spigot Joint

The first pipe shall be bedded to the established gradeline, with the bell end placed upstream. The interior surface of the bell shall be thoroughly cleaned with a wet brush and the lower portion of the bell filled with mortar as required to bring inner surfaces of abutting pipes flush and even. The spigot end of each subsequent pipe shall be cleaned with a wet brush and uniformly matched into a bell so that sections are closely fitted. After each section is laid, the remainder of the joint shall be filled with mortar, and a bead shall be formed around the outside of the joint with sufficient additional mortar. If mortar is not sufficiently stiff to prevent appreciable slump before setting, the outside of the joint shall be wrapped or bandaged with cheesecloth to hold mortar in place.

3.4.1.2 Cement-Mortar Oakum Joint for Bell-and-Spigot Pipe

A closely twisted gasket shall be made of jute or oakum of the diameter required to support the spigot end of the pipe at the proper grade and to make the joint concentric. Joint packing shall be in one piece of sufficient length to pass around the pipe and lap at top. This gasket shall be thoroughly saturated with neat cement grout. The bell of the pipe shall be thoroughly cleaned with a wet brush, and the gasket shall be laid in the bell for the lower third of the circumference and covered with mortar. The spigot of the pipe shall be thoroughly cleaned with a wet brush, inserted in the bell, and carefully driven home. A small amount of mortar shall be inserted in the annular space for the upper two-thirds of the circumference. The gasket shall be lapped at the top of the pipe and driven home in the annular space with a caulking tool. The remainder of the annular space shall be filled completely with mortar and beveled at an angle of approximately 45 degrees with the outside of the bell. If mortar is not sufficiently stiff to prevent appreciable slump before setting, the outside of the joint thus made shall be wrapped with cheesecloth. Placing of this type of joint shall be kept at least five joints behind laying operations.

3.4.1.3 Cement-Mortar Diaper Joint for Bell-and-Spigot Pipe

The pipe shall be centered so that the annular space is uniform. The annular space shall be caulked with jute or oakum. Before caulking, the inside of the bell and the outside of the spigot shall be cleaned.

a. Diaper Bands: Diaper bands shall consist of heavy cloth fabric to hold grout in place at joints and shall be cut in lengths that extend one-eighth of the circumference of pipe above the spring line on one side of the pipe and up to the spring line on the other side of the pipe. Longitudinal edges of fabric bands shall be rolled and stitched around two pieces of wire. Width of fabric bands shall be such that after fabric has been securely stitched around both edges on wires, the wires will be uniformly spaced not less than 8 inches apart. Wires shall be cut into lengths to pass around pipe with sufficient extra length for the ends to be twisted at top of pipe to hold the band securely in place; bands shall be accurately centered around lower portion of joint.

b. Grout: Grout shall be poured between band and pipe from the high side of band only, until grout rises to the top of band at the spring line of pipe, or as nearly so as possible, on the opposite side of pipe, to ensure a thorough sealing of joint around the portion of pipe covered by the band. Silt, slush, water, or polluted mortar grout forced up on the lower side shall be forced out by pouring, and removed.

c. Remainder of Joint: The remaining unfilled upper portion of the joint shall be filled with mortar and a bead formed around the outside of this upper portion of the joint with a sufficient amount of additional mortar. The diaper shall be left in place. Placing of this type of joint shall be kept at least five joints behind actual laying of pipe. No backfilling around joints shall be done until joints have been fully inspected and approved.

3.4.1.4 Cement-Mortar Tongue-and-Groove Joint

The first pipe shall be bedded carefully to the established gradeline with the groove upstream. A shallow excavation shall be made underneath the pipe at the joint and filled with mortar to provide a bed for the pipe. The grooved end of the first pipe shall be thoroughly cleaned with a wet brush, and a layer of soft mortar applied to the lower half of the groove. The tongue of the second pipe shall be cleaned with a wet brush; while in horizontal position, a layer of soft mortar shall be applied to the upper half of the tongue. The tongue end of the second pipe shall be inserted in the grooved end of the first pipe until mortar is squeezed out on interior and exterior surfaces. Sufficient mortar shall be used to fill the joint completely and to form a bead on the outside.

3.4.1.5 Cement-Mortar Diaper Joint for Tongue-and-Groove Pipe

The joint shall be of the type described for cement-mortar tongue-and-groove joint in this paragraph, except that the shallow excavation directly beneath the joint shall not be filled with mortar until after a gauze or cheesecloth band dipped in cement mortar has been wrapped around the outside of the joint. The cement-mortar bead at the joint shall be at least 1/2 inch, thick and the width of the diaper band shall be at least 8 inches. The diaper shall be left in place. Placing of this type of joint shall be kept at least five joints behind the actual laying of the pipe. Backfilling around the joints shall not be done until the joints have been fully inspected and approved.

3.4.1.6 Plastic Sealing Compound Joints for Tongue-and-Grooved Pipe

Sealing compounds shall follow the recommendation of the particular manufacturer in regard to special installation requirements. Surfaces to receive lubricants, primers, or adhesives shall be dry and clean. Sealing compounds shall be affixed to the pipe not more than 3 hours prior to installation of the pipe, and shall be protected from the sun, blowing dust, and other deleterious agents at all times. Sealing compounds shall be inspected before installation of the pipe, and any loose or improperly affixed sealing compound shall be removed and replaced. The pipe shall be aligned with the previously installed pipe, and the joint pulled together. If, while making the joint with mastic-type sealant, a slight protrusion of the material is not visible along the entire inner and outer circumference of the joint when the joint is pulled up, the pipe shall be removed and the joint remade. After the joint is made, all inner protrusions shall be cut

off flush with the inner surface of the pipe. If nonmastic-type sealant material is used, the "Squeeze-Out" requirement above will be waived.

3.4.1.7 Flexible Watertight Joints

Gaskets and jointing materials shall be as recommended by the particular manufacturer in regard to use of lubricants, cements, adhesives, and other special installation requirements. Surfaces to receive lubricants, cements, or adhesives shall be clean and dry. Gaskets and jointing materials shall be affixed to the pipe not more than 24 hours prior to the installation of the pipe, and shall be protected from the sun, blowing dust, and other deleterious agents at all times. Gaskets and jointing materials shall be inspected before installing the pipe; any loose or improperly affixed gaskets and jointing materials shall be removed and replaced. The pipe shall be aligned with the previously installed pipe, and the joint pushed home. If, while the joint is being made the gasket becomes visibly dislocated the pipe shall be removed and the joint remade.

3.4.1.8 External Sealing Band Joint for Noncircular Pipe

Surfaces to receive sealing bands shall be dry and clean. Bands shall be installed in accordance with manufacturer's recommendations.

3.4.2 Corrugated Metal Pipe

3.4.2.1 Field Joints

Transverse field joints shall be designed so that the successive connection of pipe sections will form a continuous line free of appreciable irregularities in the flow line. In addition, the joints shall meet the general performance requirements described in ASTM A 798/A 798M. Suitable transverse field joints which satisfy the requirements for one or more of the joint performance categories can be obtained with the following types of connecting bands furnished with suitable band-end fastening devices: corrugated bands, bands with projections, flat bands, and bands of special design that engage factory reformed ends of corrugated pipe. The space between the pipe and connecting bands shall be kept free from dirt and grit so that corrugations fit snugly. The connecting band, while being tightened, shall be tapped with a soft-head mallet of wood, rubber or plastic, to take up slack and ensure a tight joint. The annular space between abutting sections of part paved, and fully paved pipe and pipe arch, in sizes 30 inches or larger, shall be filled with a bituminous material after jointing. Field joints for each type of corrugated metal pipe shall maintain pipe alignment during construction and prevent infiltration of fill material during the life of the installations. The type, size, and sheet thickness of the band and the size of angles or lugs and bolts shall be as indicated or where not indicated, shall be as specified in the applicable standards or specifications for the pipe.

3.5 DRAINAGE STRUCTURES

3.5.1 Manholes and Inlets

Construction shall be of reinforced concrete or plain concrete, ; complete with frames and covers or gratings; and with fixed galvanized steel ladders where indicated. Pipe studs and junction chambers of prefabricated corrugated metal manholes shall be fully bituminous-coated and paved when the connecting branch lines are so treated.

3.5.2 Walls and Headwalls

Construction shall be as indicated.

3.6 STEEL LADDER INSTALLATION

Ladder shall be adequately anchored to the wall by means of steel inserts spaced not more than 6 feet vertically, and shall be installed to provide at least 6 inches of space between the wall and the rungs. The wall along the line of the ladder shall be vertical for its entire length.

3.7 BACKFILLING

3.7.1 Backfilling Pipe in Trenches

After the pipe has been properly bedded, selected material from excavation or borrow, at a moisture content that will facilitate compaction, shall be placed along both sides of pipe in layers not exceeding 6 inches in compacted depth. The backfill shall be brought up evenly on both sides of pipe for the full length of pipe. The fill shall be thoroughly compacted under the haunches of the pipe. Each layer shall be thoroughly compacted with mechanical tampers or rammers. This method of filling and compacting shall continue until the fill has reached an elevation of at least 12 inches above the top of the pipe. The remainder of the trench shall be backfilled and compacted by spreading and rolling or compacted by mechanical rammers or tampers in layers not exceeding 8 inches. Tests for density shall be made as necessary to ensure conformance to the compaction requirements specified below. Where it is necessary, in the opinion of the Contracting Officer, that sheeting or portions of bracing used be left in place, the contract will be adjusted accordingly. Untreated sheeting shall not be left in place beneath structures or pavements.

3.7.2 Backfilling Pipe in Fill Sections

For pipe placed in fill sections, backfill material and the placement and compaction procedures shall be as specified below. The fill material shall be uniformly spread in layers longitudinally on both sides of the pipe, not exceeding 6 inches in compacted depth, and shall be compacted by rolling parallel with pipe or by mechanical tamping or ramming. Prior to commencing normal filling operations, the crown width of the fill at a height of 12 inches above the top of the pipe shall extend a distance of not less than twice the outside pipe diameter on each side of the pipe or 12 feet, whichever is less. After the backfill has reached at least 12 inches above the top of the pipe, the remainder of the fill shall be placed and thoroughly compacted in layers not exceeding 8 inches.

3.7.3 Movement of Construction Machinery

When compacting by rolling or operating heavy equipment parallel with the pipe, displacement of or injury to the pipe shall be avoided. Movement of construction machinery over a culvert or storm drain at any stage of construction shall be at the Contractor's risk. Any damaged pipe shall be repaired or replaced.

3.7.4 Compaction

3.7.4.1 General Requirements

Cohesionless materials include gravels, gravel-sand mixtures, sands, and

gravelly sands. Cohesive materials include clayey and silty gravels, gravel-silt mixtures, clayey and silty sands, sand-clay mixtures, clays, silts, and very fine sands. When results of compaction tests for moisture-density relations are recorded on graphs, cohesionless soils will show straight lines or reverse-shaped moisture-density curves, and cohesive soils will show normal moisture-density curves.

3.7.4.2 Minimum Density

Backfill over and around the pipe and backfill around and adjacent to drainage structures shall be compacted at the approved moisture content to the following applicable minimum density, which will be determined as specified below.

a. Under airfield and heliport pavements, paved roads, streets, parking areas, and similar-use pavements including adjacent shoulder areas, the density shall be not less than 90 percent of maximum density for cohesive material and 95 percent of maximum density for cohesionless material, up to the elevation where requirements for pavement subgrade materials and compaction shall control.

b. Under unpaved or turfed traffic areas, density shall not be less than 90 percent of maximum density for cohesive material and 95 percent of maximum density for cohesionless material.

c. Under nontraffic areas, density shall be not less than that of the surrounding material.

3.7.5 Determination of Density

Testing shall be the responsibility of the Contractor and performed at no additional cost to the Government. Testing shall be performed by an approved commercial testing laboratory or by the Contractor subject to approval. Tests shall be performed in sufficient number to ensure that specified density is being obtained. Laboratory tests for moisture-density relations shall be made in accordance with ASTM D 1557 except that mechanical tampers may be used provided the results are correlated with those obtained with the specified hand tamper. Field density tests shall be determined in accordance with ASTM D 2167 or ASTM D 2922. When ASTM D 2922 is used, the calibration curves shall be checked and adjusted, if necessary, using the sand cone method as described in paragraph Calibration of the referenced publications. ASTM D 2922 results in a wet unit weight of soil and when using this method ASTM D 3017 shall be used to determine the moisture content of the soil. The calibration curves furnished with the moisture gauges shall be checked along with density calibration checks as described in ASTM D 3017 or ASTM D 2922. Test results shall be furnished the Contracting Officer. The calibration checks of both the density and moisture gauges shall be made at the beginning of a job on each different type of material encountered and at intervals as directed.

-- End of Section --

SECTION TABLE OF CONTENTS

DIVISION 02 - SITE WORK

SECTION 02710

BITUMINOUS-STABILIZED BASE OR SUBBASE COURSE

PART 1 GENERAL

1.1 SCOPE OF WORK
1.2 REFERENCES
1.3 UNIT PRICES
1.3.1 Measurement and Payment
1.3.1.1 Bituminous Stabilization
1.3.2 Basis for Payment
1.4 SUBMITTALS
1.5 DEGREE OF COMPACTION
1.6 STOCKPILING MATERIALS
1.7 PLANT, EQUIPMENT, MACHINES, AND TOOLS
1.7.1 General Requirements
1.7.2 Bituminous Distributor
1.7.3 Straightedge
1.8 WEATHER LIMITATIONS
1.9 SOURCE OF BITUMINOUS MATERIAL

PART 2 PRODUCTS

2.1 MATERIALS
2.1.1 Bituminous Material
2.1.1.1 Emulsified Asphalt
2.1.2 Material to be Stabilized
2.1.2.1 Subbase Course Material
2.1.2.2 Base Course Material
2.1.3 Water

PART 3 EXECUTION

3.1 GENERAL CONSTRUCTION REQUIREMENTS
3.1.1 Mix Design
3.1.2 Bituminous Material Mix
3.2 PREPARATION OF AREAS TO BE STABILIZED
3.2.1 General Requirements
3.2.2 Subbase Material
3.3 GRADE CONTROL
3.4 MIXING OF MATERIALS
3.4.1 Mixed-in-Place Method
3.5 PLACEMENT AND COMPACTION
3.6 EDGES OF STABILIZED COURSE
3.7 FINISHING
3.7.1 Smoothness
3.7.2 Thickness Control
3.8 CONSTRUCTION JOINTS
3.9 SAMPLING AND TESTING

3.9.1 Field Density
3.9.1.1 Field Density With Moisture Content
3.9.2 Extraction Test
3.9.3 Smoothness Test
3.9.4 Thickness
3.9.5 Bituminous Material
3.10 MAINTENANCE
3.11 TRAFFIC
3.12 CONSTRUCTION QUALITY CONTROL

-- End of Section Table of Contents --

SECTION 02710

BITUMINOUS-STABILIZED BASE OR SUBBASE COURSE

PART 1 GENERAL

1.1 SCOPE OF WORK

This guide specification covers the requirements for bituminous stabilization of subbases and base courses for airfield pavements and for roads, streets, and parking areas.

1.2 REFERENCES

The publications listed below form a part of this specification to the extent referenced. The publications are referred to in the text by basic designation only.

AMERICAN SOCIETY FOR TESTING AND MATERIALS (ASTM)

ASTM D 140	(1993) Sampling Bituminous Materials
ASTM D 977	(1991) Emulsified Asphalt
ASTM D 979	(1996) Sampling Bituminous Paving Mixtures
ASTM D 1556	(1990, R 1996) Density and Unit Weight of Soil in Place by the Sand-Cone Method
ASTM D 1557	(1991) Laboratory Compaction Characteristics of Soil Using Modified Effort (56,000 ft-lbf/cu. ft. (2,700 kN-m/cu. m.))
ASTM D 1883	(1994) CBR (California Bearing Ratio) of Laboratory-Compacted Soils
ASTM D 2172	(1995) Quantitative Extraction of Bitumen from Bituminous Paving Mixtures
ASTM D 2922	(1996) Density of Soil and Soil-Aggregate in Place by Nuclear Methods (Shallow Depth)
ASTM D 3017	(1988; R 1993) Water Content of Soil and Rock in Place by Nuclear Methods (Shallow Depth)
ASTM D 3666	(1993) Minimum Requirements for Agencies Testing and Inspection Bituminous Paving Materials

1.3 UNIT PRICES

1.3.1 Measurement and Payment

1.3.1.1 Bituminous Stabilization

Measurement will be by the cubic yard of work completed and accepted.

1.3.2 Basis for Payment

There are no line items in the current Pricing Schedule for this work; bituminous stabilization, constructed and accepted, will be paid for at the negotiated contract unit price per cubic yard of work completed for Bituminous Stabilized Subbase and Base Courses. No payment will be made for any material wasted, used for the convenience of the Contractor, unused or rejected. No separate payment will be made for sanding or dusting the bituminous prime-coated surfaces, and all costs for sanding or dusting shall be included in the contract unit price for bituminous stabilization.

1.4 SUBMITTALS

Government approval is required for submittals with a "GA" designation; submittals having an "FIO" designation are for information only. The following shall be submitted in accordance with Section 01330 SUBMITTAL PROCEDURES:

SD-01 Data

Plant, Equipment, Machines, and Tools; FIO. Mix Design; GA.
List of proposed equipment to be used in performance of construction work, including descriptive data. Mix design at least 30 days before it is to be used.

SD-08 Statements

Source of Bituminous Material; FIO. Operation of Aggregate Sources; FIO.

Notification upon selection of bituminous material and aggregate sources.

SD-09 Reports

Sampling and Testing; FIO.

Calibration curves and related test results, prior to using the device or equipment being calibrated. Copies of field tests results within 24 hours after the tests are performed. Certified copies of test results, not less than 30 days before material is required for the work.

SD-14 Samples

Bituminous Material; FIO.

Bituminous material used in the job.

1.5 DEGREE OF COMPACTION

Degree of compaction is expressed as a percentage of the maximum dry density obtained by the test procedure in accordance with ASTM D 1557, Procedure C, abbreviated herein as percent laboratory maximum density.

1.6 STOCKPILING MATERIALS

Select material, including approved material available from excavation and grading shall be stockpiled in the manner and at the locations designated.

Before stockpiling material, the storage sites shall be cleared, drained, and leveled. Materials obtained from different sources shall be stockpiled separately.

1.7 PLANT, EQUIPMENT, MACHINES, AND TOOLS

1.7.1 General Requirements

Plant, equipment, machines, and tools used in the work shall be subject to approval and shall be maintained in a satisfactory working condition at all times. The equipment shall be adequate and shall have the capability of producing the required compaction, meeting grade controls, thickness control and smoothness requirements as set forth herein.

1.7.2 Bituminous Distributor

Distributor shall have pneumatic tires of such size and number to prevent rutting, shoving, or otherwise damaging base surface or other layers in the pavement structure. Distributor shall be designed and equipped to spray bituminous material in a uniform double or triple lap at the specified temperature, at variable widths, and at readily determined and controlled rates from 0.05 to 2.0 gallons per square yard with an allowable variation from the specified rate of plus or minus 5 percent and with a pressure range of 25 to 75 psi. Distributor equipment shall include a separate power unit for the bitumen pump, full-circulation spray bars, tachometer, pressure gauges, volume-measuring devices, adequate heaters for heating of materials to the proper application temperature, a thermometer for reading temperature of tank contents, and a hand hose attachment suitable for applying bituminous material manually to areas inaccessible to the distributor. Distributor shall be equipped to circulate and agitate the bituminous material during the heating process.

1.7.3 Straightedge

The Contractor shall furnish and maintain at the site, in good condition, one 12-foot straightedge for each bituminous paver, for use in the testing of the finished surface. Straightedge shall be made available for government use. Straightedges shall be constructed of aluminum or other lightweight metal and shall have blades of box or box-girder cross section with flat bottom reinforced to insure rigidity and accuracy. Straightedges shall have handles to facilitate movement on pavement.

1.8 WEATHER LIMITATIONS

Bituminous material shall not be applied when the atmospheric temperature is less than 50 degrees F. No bituminous material shall be applied to soils that are frozen or contain frost. If the temperature falls below 35 degrees F, completed bitumen-treated areas shall be protected against any detrimental effects of freezing.

1.9 SOURCE OF BITUMINOUS MATERIAL

After selecting the source of bituminous material a notification shall be submitted to the Contracting Officer within 15 days after the award of contract.

PART 2 PRODUCTS

2.1 MATERIALS

2.1.1 Bituminous Material

Material used in the subbase and base-bitumen mixture shall be the same type throughout and shall conform to one of the following:

2.1.1.1 Emulsified Asphalt

ASTM D 977 Type SS-1.

2.1.2 Material to be Stabilized

2.1.2.1 Subbase Course Material

Subbase course material shall conform to the requirements outlined in Section 02721, SUBBASE COURSE.

2.1.2.2 Base Course Material

Base course material shall conform to the requirements outlined in Section 02722, AGGREGATE BASE COURSE.

2.1.3 Water

Water shall be clean, fresh, and potable.

PART 3 EXECUTION

3.1 GENERAL CONSTRUCTION REQUIREMENTS

3.1.1 Mix Design

Contractor shall develop and submit for approval a proposed mix design prior to stabilization work. Mix shall be developed using samples of the material to be stabilized. Mix design shall be capable of producing a CBR bearing value in accordance with ASTM D 1883 for the following applications:

Application	CBR Value
Subbase Course(All)	35
Base Course(Roads/Parking Areas)	50
Base Course(Airfields)	80

3.1.2 Bituminous Material Mix

Bituminous material, of the amount required for each application, shall be uniformly applied by a bituminous distributor within a temperature range of 77 degrees F to 131 degrees F, as directed. Areas inaccessible to or missed by the distributor shall be properly treated with bituminous material, using the manually operated hose attachment. After mixing is completed, the proportions of the mixture shall be in accordance with the approved mix design. On the basis of dry weight, moisture shall be held at optimum plus or minus 1 percent when mixing is complete. When the stabilized course is constructed in more than one layer, the previously constructed layer shall be cleaned of loose and foreign matter by sweeping with power sweepers or power brooms, except that hand brooms may be used in areas where power cleaning is not practicable. Adequate drainage shall be

provided during the entire construction period to prevent water from collecting or standing on the area to be stabilized or on pulverized, mixed, or partially mixed material.

3.2 PREPARATION OF AREAS TO BE STABILIZED

3.2.1 General Requirements

Soil subgrade areas upon which stabilized subbase material is to be placed shall be cleared of debris, compacted, and accepted as outlined on Section 02300, EARTHWORK. Subbase areas upon which stabilized base material is to be placed shall be cleared of debris, compacted, and accepted as outlined in Section 02721, SUBBASE COURSES. Surfaces shall be inspected for adequate compaction and shall be capable of withstanding, without displacement, the compaction specified for the subbase material or base-bitumen mixture. Debris and removed unsatisfactory in-place material shall be disposed of off of Government-controlled land prior to the completion of construction.

3.2.2 Subbase Material

Sufficient subbase material shall be utilized to provide the required thickness of the soil-bitumen layer after compaction and shall be processed to meet the requirements specified before bituminous stabilization is undertaken.

3.3 GRADE CONTROL

Underlying material shall be excavated to sufficient depth for the required stabilized-course thickness so that the finish stabilized course with the subsequent surface course will meet the fixed grade. Line and grade stakes shall be provided as necessary for control. Grade stakes shall be placed in lines parallel to the centerline of the area under construction and suitably spaced for string lining. Finished and completed stabilized area shall conform to the lines, grades, cross section, and dimensions indicated.

3.4 MIXING OF MATERIALS

3.4.1 Mixed-in-Place Method

Rate of application of bituminous material for the subbase material or base-bitumen mixture shall be that rate sufficient to meet the mix design amount of bitumen. Bituminous material shall be uniformly mixed with the subbase or base materials by means of a disk, blade grader, or rotary mixer. If the bituminous material is applied in more than one increment, each application shall be partially mixed into the material as directed. After the required amount of bituminous material has been added to the loose material, the bituminous material and subbase or base material shall be thoroughly mixed by disking, blading with a blade grader, rotary mixer, or other equipment suitable for mixing the soil and bitumen. No equipment except that used for spreading and mixing operations shall pass over the freshly spread bituminous material.

3.5 PLACEMENT AND COMPACTION

For mixed-in-place material the soil-bitumen shall have been allowed an adequate amount of time to cure. After curing, the mixture shall be shaped approximately to the specified lines and grades and thoroughly loosened to its full depth and width. Rolling shall begin at the outside edge of the

surface and proceed to the center, overlapping on successive trips at least one-half the width of the roller. Alternate trips of the roller shall be slightly different lengths. The speed of the roller shall be such that displacement of materials does not occur. Density of compacted mixture shall be at least 95 percent of laboratory maximum dry density. Areas inaccessible to rollers shall be compacted to the required density with mechanical tampers.

3.6 EDGES OF STABILIZED COURSE

For areas where plant-mixed stabilized material is placed in successive strips, one foot of the material from the outside edge of the previously placed strip shall be removed prior to placing the adjacent strip. For the shoulders of the stabilized areas, approved material shall be placed along the edges of the stabilized course in such quantity as will compact to the thickness of the course being constructed, or to the thickness of each layer in a multiple-layer course. At least a 1 foot width of the shoulder or previously placed strip shall be rolled and compacted simultaneously with the rolling and compacting of each layer of the stabilized course as directed.

3.7 FINISHING

The surface of the top layer shall be finished to grade and cross section shown. Finished surface shall be uniform texture. Light blading during rolling may be necessary for the finished surface to conform to the lines, grades, and cross sections. Should the surface for any reason become rough, corrugated, uneven in texture, or traffic-marked prior to completion, such unsatisfactory portion shall be scarified, reworked, relaid, or replaced as directed. Should any portion of the course, when laid, become watersoaked for any reason, that portion shall be removed immediately, and the mix placed in a windrow and aerated until a moisture content within the limits specified is obtained, and then spread, shaped, and rolled as specified.

3.7.1 Smoothness

The surface of each layer shall show no deviations in excess of 3/8 inch when tested with the 12-foot straightedge. Deviations exceeding this amount shall be corrected by removing material and replacing with new material, or by reworking existing material and compacting, as directed.

3.7.2 Thickness Control

Compacted thickness of the stabilized course shall be within 1/2 inch of the thickness indicated. Where measured thickness of the stabilized course is more than 1/2 inch deficient, such areas shall be corrected by scarifying, adding new material of proper gradation, reblading, and recompacting as directed. Where the measured thickness of the stabilized course is 1/2 inch thicker than indicated, the course shall be considered as conforming to the specified thickness requirements. Average job thickness shall be the average of all thickness measurements taken for the job, but shall be within 1/4 inch of the thickness indicated.

3.8 CONSTRUCTION JOINTS

At the end of each day's construction, a straight transverse construction joint shall be formed by cutting back into the completed work to form a true vertical face free of loose or shattered material. Material along

construction joints not properly compacted shall be removed and replaced with soil-bitumen that is mixed, moistened, and compacted in accordance with this specification.

3.9 SAMPLING AND TESTING

Sampling and testing shall be performed by an approved commercial testing laboratory or by facilities furnished by the Contractor and meeting the requirements outlined in ASTM D 3666. No work requiring testing will be permitted until the facilities have been inspected and approved. The first inspection shall be at the expense of the Government. Cost incurred for any subsequent inspection required because of failure of the facilities to pass the first inspection will be charged to the Contractor. Soil and aggregate tests shall be performed as specified in Section 02721, SUBBASE COURSE or Section 02722, AGGREGATE BASE COURSE, as applicable. Tests shall be performed in sufficient numbers and at the locations and times directed to ensure that materials and compaction meet specified requirements. Certified copies of test results shall be furnished to the Contracting Officer.

3.9.1 Field Density

Field in-place density shall be determined in accordance with ASTM D 1556 or ASTM D 2922. When ASTM D 2922 is used, the Contractor shall obtain all necessary authorization(s) and permits at no additional cost to the Government. When ASTM D 2922 is used, the calibration curves shall be checked, and adjusted if necessary, using the sand cone method as described in paragraph Calibration of the ASTM publication. ASTM D 2922 results in a wet unit weight of soil and when using this method, ASTM D 3017 shall be used to determine the moisture content of the soil. The calibration curves furnished with the moisture gauges shall be checked along with density calibration checks as described in ASTM D 3017. If ASTM D 2922 is used, in-place densities shall be checked by ASTM D 1556 at least once per lift for every 5 nuclear tests. Calibration curves and calibration test results shall be furnished within 24 hours of conclusion of the tests.

3.9.1.1 Field Density With Moisture Content

Perform two field density tests with moisture contents for each increment or fraction of 1000 square yards placed during each 8 hour shift.

3.9.2 Extraction Test

Extraction tests shall be conducted in accordance with ASTM D 2172, to confirm the amount of bitumen and moisture in the mixture. One test shall be conducted for every 5 density tests. Sampling shall be taken in accordance with ASTM D 979.

3.9.3 Smoothness Test

Measurements for deviation from grade and cross section shown shall be taken in successive positions parallel to the area centerline, with a 12-foot straightedge. Measurements shall also be taken perpendicular to the area centerline at 50-foot intervals.

3.9.4 Thickness

Thickness of the stabilized course shall be measured at intervals in such a manner as to ensure one measurement for each 100 square yards square yards

of stabilized course. Measurements shall be made by taking differential elevations between the presurfaced subgrade or subbase course and the top of the completed stabilized course at preselected locations.

3.9.5 Bituminous Material

A sample of the bituminous material used shall be taken in accordance with ASTM D 140 under the supervision of the Contracting Officer. The sample will be retained by the Government.

3.10 MAINTENANCE

Stabilized area shall be maintained in a satisfactory condition until accepted by the Contracting Officer. Maintenance shall include immediate repairs to any defects and shall be repeated as often as necessary to keep the area intact. Defects shall be corrected as specified herein.

3.11 TRAFFIC

Completed portions of the stabilized subbase or base-bitumen area may be opened to controlled traffic within 4 hours of completion of the course, if approved by the Contracting Officer.

3.12 CONSTRUCTION QUALITY CONTROL

Attention is directed to the applicable sections which requires the Contractor to perform quality control inspection, testing, and reporting.

-- End of Section --

SECTION TABLE OF CONTENTS

DIVISION 02 - SITE WORK

SECTION 02711

PORTLAND CEMENT-STABILIZED BASE OR SUBBASE COURSE

PART 1 GENERAL

1.1 DEFINITION
1.2 REFERENCES
1.3 UNIT PRICES
1.4 WAYBILLS AND DELIVERY TICKETS
1.5 SUBMITTALS
1.6 PLANT, EQUIPMENT, MACHINES, AND TOOLS
1.6.1 Straightedge
1.7 WEATHER LIMITATIONS

PART 2 PRODUCTS

2.1 MATERIALS
2.1.1 Cement
2.1.2 Bituminous Material
2.1.3 Material to be Stabilized
2.1.4 Water
2.1.5 Burlap
2.1.6 Impervious Sheeting
2.2 MIX DESIGN
2.2.1 Laboratory Tests for Mix Design
2.2.1.1 General
2.2.1.2 Sieve Analysis and Plasticity Index
2.2.1.3 Moisture-Density Tests
2.2.1.4 Compressive Strength Tests
2.2.1.5 Mix Design Proposal

PART 3 EXECUTION

3.1 GENERAL REQUIREMENTS
3.2 STOCKPILING MATERIALS
3.3 PREPARATION OF AREA TO BE STABILIZED
3.3.1 In-Place Material to be Stabilized
3.3.2 In-Place Materials to Receive Stabilized Course
3.3.3 Select Material
3.4 INSTALLATION
3.4.1 Edges of Stabilized Course
3.4.2 Mixed-in-Place Method
3.4.2.1 Scarifying and Pulverizing of Soil
3.4.2.2 Application of Cement
3.4.2.3 Dry Mixing
3.4.2.4 Water Application and Moist Mixing
3.4.3 Traveling-Plant Method
3.4.4 Layer Thickness
3.4.5 Compaction

3.5 FINISHING
3.6 CONSTRUCTION JOINTS
3.7 CURING AND PROTECTION
3.7.1 Moist Curing
3.7.2 Burlap
3.7.3 Impervious Sheeting
3.7.4 Bituminous Material
3.8 FIELD QUALITY CONTROL
3.8.1 General
3.8.2 Soil
3.8.3 Cement Content Control
3.8.3.1 Spot check
3.8.3.2 Overall check
3.8.4 Preparation for Placing
3.8.5 Placing
3.8.6 In Place Density Tests
3.8.7 Compressive Strengths
3.8.8 Grade Control
3.8.9 Smoothness Test
3.8.10 Thickness Control
3.8.11 Protection
3.8.12 Traffic
3.9 DISPOSAL OF UNSATISFACTORY MATERIALS

-- End of Section Table of Contents --

SECTION 02711

PORTLAND CEMENT-STABILIZED BASE OR SUBBASE COURSE

PART 1 GENERAL

1.1 DEFINITION

Portland cement-stabilized base or subbase course, as used herein, is a mixture of portland cement and in-place, material uniformly blended and thoroughly compacted to produce a pavement course which meets the criteria set forth in the drawings and specifications.

1.2 REFERENCES

The publications listed below form a part of this specification to the extent referenced. The publications are referred to in the text by basic designation only.

AMERICAN ASSOCIATION OF STATE HIGHWAY AND TRANSPORTATION OFFICIALS (AASHTO)

AASHTO M 81	(1992) Cut-Back Asphalt (Rapid-Curing Type)
AASHTO M 82	(1975) Cut-Back Asphalt (Medium-Curing Type)
AASHTO M 147	(1965) Materials for Aggregate and Soil-Aggregate Subbase, Base and Surface Courses
AASHTO M 182	(1991) Burlap Cloth Made from Jute or Kenaf
AASHTO T 134	(1993) Moisture-Density Relations of Soil-Cement Mixtures
AASHTO T 135	(1992) Wetting-and-Drying Test of Compacted Soil-Cement Mixtures
AASHTO T 136	(1992) Freezing-and-Thawing Tests of Compacted Soil-Cement Mixtures

AMERICAN SOCIETY FOR TESTING AND MATERIALS (ASTM)

ASTM C 136	(1996a) Sieve Analysis of Fine and Coarse Aggregates
ASTM C 150	(1996) Portland Cement
ASTM C 171	(1997) Sheet Materials for Curing Concrete
ASTM C 511	(1985) Moist Rooms and Water Storage Tanks Used in Testing Hydraulic Cements and Concrete

ASTM D 75	(1987; R 1992) Sampling Aggregates
ASTM D 558	(1996) Moisture-Density Relations of Soil-Cement Mixtures
ASTM D 977	(1991) Emulsified Asphalt
ASTM D 1556	(1990; R 1996) Density and Unit Weight of Soil in Place by the Sand-Cone Method
ASTM D 1557	(1991) Laboratory Compaction Characteristics of Soil Using Modified Effort (56,000 ft-lbf/cu. ft.(2,700 kN-m/cu. m.))
ASTM D 1632	(1996) Making and Curing Soil-Cement Compression and Flexure Test Specimens in the Laboratory
ASTM D 1633	(1996) Compressive Strength of Molded Soil-Cement Cylinders
ASTM D 2216	(1992) Laboratory Determination of Water (Moisture) Content Of Soil, Rock and Soil-Aggregate Mixtures.
ASTM D 2922	(1996) Density of Soil and Soil-Aggregate in Place by Nuclear Methods (Shallow Depth)
ASTM D 3017	(1988; R 1993) Water Content of Soil and Rock In Place by Nuclear Methods (Shallow Depth)
ASTM D 4318	(1995a) Liquid Limit, Plastic Limit, and Plasticity Index of Soils
ASTM E 11	(1995) Wire-Cloth Sieves for Testing Purposes

1.3 UNIT PRICES

There are no line items in the current Pricing Schedule for this work; Portland Cement Stabilization, constructed and accepted, will be paid for at the negotiated contract unit price per cubic yard of work completed for Portland Cement Stabilized Subbase and Base Courses. No payment will be made for any material wasted, used for the convenience of the Contractor, unused or rejected.

1.4 WAYBILLS AND DELIVERY TICKETS

Copies of waybills or delivery tickets shall be submitted during the progress of the work. Before the final payment is allowed, waybills and certified delivery tickets shall be furnished for all cement, bituminous material and select material used in the construction.

1.5 SUBMITTALS

Government approval is required for submittals with a "GA" designation; submittals having an "FIO" designation are for information only. The following shall be submitted in accordance with Section 01330 SUBMITTAL PROCEDURES:

SD-01 Data

Mix Design; GA.

Proposed mix design, prior to start of stabilization work.

SD-09 Reports

Stabilizing Course; GA.

Certified copies of aggregate test results, not less than 30 days before the material is required in the work. Calibration curves and related test results, prior to using the device or equipment being calibrated.

SD-13 Certificates

Bituminous Material; FIO.

Certified copies of the manufacturer's test reports indicating compliance with applicable specified requirements, not less than 30 days before the material is required in the work.

SD-18 Records

Stabilizing Course; FIO.

Notification of sources from which aggregates are to be obtained, within 15 days after the award of contract.

Source of Bituminous Materials; FIO.

Notification of sources from which bituminous materials are to be obtained, within 15 days after the award of the contract.

Waybills and Delivery Tickets; FIO.

Copies during construction. Copies for all material used, before final payment.

1.6 PLANT, EQUIPMENT, MACHINES, AND TOOLS

Plant, equipment, machines, and tools used in the work shall be subject to approval and shall be maintained in a satisfactory working condition at all times. The equipment shall have the capability of producing the required compaction, meeting grade controls, thickness control and smoothness requirements specified. A test section of at least 8 by 100 feet, utilizing the equipment and procedures proposed for use by the Contractor, shall be placed to demonstrate that soil-cement stabilization conforming to this specification can be produced.

1.6.1 Straightedge

The Contractor shall furnish and maintain at the site, in good condition, one 12 foot straightedge for each bituminous paver, for use in the testing

of the finished surface. Straightedges shall be made available for Government use. Straightedges shall be constructed of aluminum or other lightweight metal and shall have blades of box or box-girder cross section with flat bottom reinforced to insure rigidity and accuracy. Straightedges shall have handles to facilitate movement on pavement.

1.7 WEATHER LIMITATIONS

Cement shall not be applied when the atmospheric temperature is less than 40 degrees F. Cement shall not be applied to soils that are frozen or contain frost, or when the underlying material is frozen. If the temperature falls below 35 degrees F, completed cement-treated areas shall be protected against detrimental effects of freezing. Any areas of completed base or subbase that are damaged by freezing, rainfall, or other weather conditions shall be brought to a satisfactory condition in conformance with this specification without additional cost to the Government.

PART 2 PRODUCTS

2.1 MATERIALS

2.1.1 Cement

Cement shall conform to ASTM C 150, Type I or II. Low alkali cement shall be used for reactive aggregates.

2.1.2 Bituminous Material

Bituminous material for curing coat shall be emulsified asphalt conforming to ASTM D 977, Type RS-1.

2.1.3 Material to be Stabilized

Subbase material shall conform to the material requirements outlined in Section 02721, SUBBASE COURSE, except that milled asphalt concrete or asphalt contaminated materials will not be allowed. Base material to be stabilized shall consist of aggregate base material as specified in Section Section 02722, AGGREGATE BASE COURSE, as applicable. Stones retained on a 2 inch sieve and deleterious substances such as asphalt concrete, sticks, debris, and organic matter shall be removed.

2.1.4 Water

Water shall be clean, fresh, and free from injurious amounts of oil, acid, salt, alkali, organic matter, and other substances deleterious to the hardening of soil-cement, and shall be subject to approval.

2.1.5 Burlap

Burlap shall conform to AASHTO M 182.

2.1.6 Impervious Sheeting

Sheeting shall conform to ASTM C 171 and shall be white waterproof paper, white opaque polyethylene film or white burlap-polyethylene sheets.

2.2 MIX DESIGN

Mix shall be developed using the aggregate or soil-aggregate material to be stabilized. Mix shall have a minimum compressive strength of 250 psi for subbase, 750 psi for base, a weight loss of 14 percent or less after 12 cycles of the durability test, and "low alkali" cement for alkali reactive aggregate.

2.2.1 Laboratory Tests for Mix Design

2.2.1.1 General

All laboratory tests required for design of the soil-cement mix shall be provided by the Contractor. All such tests requiring the addition of water to the soil-cement mixture shall use water from the same approved source that will be used in the field for construction of the soil-cement course. The tests shall be performed by an approved commercial testing laboratory. Copies of the test results shall be furnished to the Contracting Officer within 24 hours of completion of tests. Anticipate 5 to 10 percent cement by weight will be needed to achieve required strength based on the variations in subgrade soil.

2.2.1.2 Sieve Analysis and Plasticity Index

Sieve analysis and the determination of plasticity index shall be performed on a representative sample of soil obtained from the material to be stabilized. Sieve analysis shall be performed in accordance with ASTM C 136 using sieves conforming to ASTM E 11 and shall include a 2-inch sieve. The plasticity index shall be determined in accordance with ASTM D 4318.

2.2.1.3 Moisture-Density Tests

The Contractor shall conduct moisture-density tests in accordance with the procedures contained in ASTM D 558; however, the apparatus (4 inch or 6 inch diameter mold) and the compactive effort (56,000 ft-lbf/cubic foot) shall be as described in ASTM D 1557 to compact the soil-cement mixture.

2.2.1.4 Compressive Strength Tests

Samples for compressive strength tests shall be prepared in accordance with ASTM D 1632. Prepare at least 15 specimens; 5 at three different cement contents by weight of dry soil. The cement contents may be selected using the guidance provided in the Portland Cement Association publication, SOIL-CEMENT LABORATORY HANDBOOK. Prepare the specimens at optimum moisture and maximum density, and measure and record the moisture content, dry density, and wet density. The specimens shall be cured at a constant moisture content and temperature for 7 days in an environment meeting the requirements of ASTM C 511. Unconfined compressive strength tests shall be performed on the prepared soil-cement samples, in accordance with ASTM D 1633, Method B, immediately after the seventh day of curing.

2.2.1.5 Mix Design Proposal

The Contractor shall allow the Contracting Officer seven (7) days following the submittal of the test results to allow the Government time to evaluate the mix design.

PART 3 EXECUTION

3.1 GENERAL REQUIREMENTS

Cement shall not be applied if the soil moisture content exceeds optimum moisture content specified for the cement-treated mixture. After mixing is completed, the proportions of the mixture shall be in accordance with the approved mix design. When application of water and mixing are completed, on the basis of dry weight, moisture shall not be below the optimum moisture content of the mixture nor shall it be more than 2 percent above the optimum moisture content. When the stabilized course is constructed in more than 1 layer, the previously constructed layer shall be cleaned of loose and foreign matter by sweeping with power sweepers or power brooms, except that hand brooms may be used in areas where power cleaning is not practicable. Adequate drainage shall be provided during the entire construction period to prevent water from collecting or standing on the areas to be stabilized or on pulverized, mixed, or partially mixed material. Line and grade stakes shall be provided as necessary for control. Grade stakes shall be placed in lines parallel to the centerline of the area under construction and suitably spaced for string lining.

3.2 STOCKPILING MATERIALS

Select material, including approved material available from excavation and grading shall be stockpiled in the manner and at the locations designated. Before stockpiling of material, the storage sites shall be cleared, drained, and leveled. Materials obtained from different sources shall be stockpiled separately.

3.3 PREPARATION OF AREA TO BE STABILIZED

Area to be stabilized shall be cleaned of debris, and shall be inspected for adequate compaction; and shall be capable of withstanding, without displacement, the compaction specified for the soil-cement mixture. Debris and removed unsatisfactory in-place material shall be disposed of as specified.

3.3.1 In-Place Material to be Stabilized

The entire area to be stabilized shall be graded and shaped to conform to the lines, grades, and cross sections shown in the plans, prior to being processed. Soft or yielding areas shall be made stable before construction is begun.

3.3.2 In-Place Materials to Receive Stabilized Course

Soft, yielding areas and ruts or other irregularities in the surface shall be corrected. Material in the affected areas shall be loosened and unsatisfactory material removed. Approved select material shall be added where directed. The area shall then be shaped to line, grade, and cross section, and shall be compacted to the specified density. Subgrade shall conform to Section 02300 EARTHWORK. Subbase course shall conform to Section 02721 SUBBASE COURSES.

3.3.3 Select Material

Sufficient select material shall be utilized to provide the required thickness of the soil-cement layer after compaction and shall be processed to meet the requirements specified before cement stabilization is undertaken.

3.4 INSTALLATION

3.4.1 Edges of Stabilized Course

Approved material shall be placed along the edges of the stabilized course in such quantity as will compact to the thickness of the course being constructed, or to the thickness of each layer in a multiple-layer course, allowing at least a 1 foot width of the shoulder to be rolled and compacted simultaneously with the rolling and compacting of each layer of the stabilized course.

3.4.2 Mixed-in-Place Method

3.4.2.1 Scarifying and Pulverizing of Soil

Prior to the application of cement, the soil shall be scarified and pulverized to the depth shown. Scarification shall be carefully controlled so that the layer beneath the layer to be stabilized is not disturbed. Depth of pulverizing shall not exceed the depth of scarification. Unless otherwise permitted, the area scarified and pulverized shall not exceed the area that can be completed in 2 working days.

3.4.2.2 Application of Cement

Pulverized material shall be shaped approximately to the cross section indicated. Cement shall be applied so that when uniformly mixed with the soil, the specified cement content is obtained, and a sufficient quantity of cement-treated soil is produced to construct a compacted cement-treated course conforming to the lines, grades, and cross section indicated. Equipment, except that used in spreading and mixing operations, shall not pass over the freshly spread soil cement.

3.4.2.3 Dry Mixing

Immediately after the cement has been distributed, it shall be mixed with the soil. The cement shall not be mixed below the required depth. Mixing shall continue until the cement has been sufficiently blended with the soil to prevent the formation of cement balls when water is applied.

3.4.2.4 Water Application and Moist Mixing

Moisture content of the mixture shall be determined immediately after completion of mixing of the soil and cement. Water-supply and pressure distributing equipment shall be provided that will permit the continuous application within 3 hours of all water required on the section being processed. Water shall be incorporated in the mix so that concentration of water near the surface does not occur. After all the mixing water has been added, mixing shall be continued until the water is uniformly distributed throughout the full depth of the mixture, with no portion of the mixture remaining undisturbed during mixing for more than 30 minutes. Any portion of the mixture remaining undisturbed more than 30 minutes during mixing shall be disposed of as specified. Satisfactory moisture distribution shall occur along the edges of the section.

3.4.3 Traveling-Plant Method

Traveling plant shall move at a uniform rate of speed and shall accomplish thorough mixing of the materials. Water and cement shall be delivered from supply trucks or bins at a predetermined rate. Windrows of prepared

soil-cement mixture shall be of sufficient size to cover a predetermined width to the indicated compacted thickness.

3.4.4 Layer Thickness

Compacted thickness of the stabilized course shall be as indicated. No layer shall be in excess of 8 inches nor less than 4 inches in compacted thickness.

3.4.5 Compaction

Compaction shall commence immediately after mixing is completed. Each layer shall be uniformly compacted to a density of at least 95 percent maximum density, where maximum density is measured in accordance with ASTM D 1557. At the time of compaction the moisture content shall not be less than 1 percentage point below optimum; shall be less than that which will cause the soil-cement to become unstable during compaction and finishing operations; and shall not be more than 2 percentage points above optimum. Rolling shall begin at the outside edge of the surface and proceed to the center, overlapping on successive trips at least one-half the width of the roller. Alternate trips of the roller shall be slightly different lengths. Speed of the roller at all times shall be such that displacement of the mixture does not occur.

The moisture content shall be uniform throughout the layer of material being compacted. At no time shall water be added during compaction operations to the uncompacted soil-cement mixture. If in the opinion of the Contracting Officer, the surface of a layer of soil-cement has been rutted or compacted by hauling equipment to the degree it reduces the effectiveness of compaction by the specified compactors, the Contractor will be required to scarify such surfaces as directed prior to compacting with the specified compactors. No section shall be left undisturbed for longer than thirty minutes during compaction operations. Compaction shall be done in such a manner as to produce a dense surface, free of compaction planes in not longer than one (l) hour from the time water is added to the mixture.

3.5 FINISHING

The surface shall be moistened, if necessary, and shaped to the required lines, grades, and cross section. If necessary, the surface shall be lightly scarified to eliminate any imprints made by the compacting or shaping equipment. The surface shall then be thoroughly compacted to the specified density with rubber-tired rollers and smooth-wheel tandem rollers to the extent necessary to provide a smooth, dense, uniform surface that is free of surface checking, ridges, or loose material, and that conforms to the crown, grade, and line indicated. These finishing operations shall be completed within 2 hours after completion of mixing operations. In places not accessible to finishing and shaping equipment, the mixtures shall be compacted with mechanical tampers to the density specified and shall be shaped and finished by hand methods. Any portion of the compacted mix that has density less than that specified, that has not properly hardened, or that is improperly finished shall be corrected as specified below.

3.6 CONSTRUCTION JOINTS

At the end of each day's construction, a straight transverse construction joint shall be formed by cutting back into the completed work to form a true vertical face free of loose or shattered material. Material along

construction joints not properly compacted shall be removed and replaced with soil-cement that is mixed, moistened, and compacted as specified.

3.7 CURING AND PROTECTION

The finished surface shall be protected against rapid drying for 7 days by one of the methods specified.

3.7.1 Moist Curing

A 2 inch covering of soil or not less than 4 pounds per square yard of straw shall be applied. The material shall be moistened initially and kept moistened throughout the curing period. In multiple-layer construction, the soil used in moist curing, if of approved select material, may be used for constructing the succeeding stabilized course.

3.7.2 Burlap

Burlap covers shall consist of 2 or more layers of burlap having a combined weight of 14 ounces or more per square yard in a dry condition. Burlap shall be either new or shall have been used only for curing concrete. Burlap strips shall have a length, after shrinkage, at least 1 foot greater than necessary to cover the entire width and edges of the finished stabilized area. Mats shall overlap each other at least 6 inches. Mats shall be thoroughly wetted before placing and shall be kept continuously wet and in contact with the surface and edges of the finished stabilized area for the entire curing period.

3.7.3 Impervious Sheeting

The surface of the finished stabilized area shall be moistened with a fine spray of water and then covered with impervious sheeting. The burlap of the polyethylene-coated burlap shall be thoroughly saturated with water before placing. Sheeting shall be placed with the light-colored side up. Sheets shall extend over the edges of the stabilized area and shall be held securely in place throughout the curing period. Edges of sheets shall overlap each other at least 12 inches and shall be securely cemented or taped to form continuous closed joints. Tears and holes in sheets shall be repaired immediately.

3.7.4 Bituminous Material

Bituminous material shall be uniformly applied by means of a bituminous distributor within a temperature range of 130 to 185 degrees F, as directed. Bituminous material for curing shall be uniformly applied at the rate of 0.2 to 0.25 gallon per square yard. Areas inaccessible to or missed by the distributor shall be properly treated using the manually operated hose attachment. Bituminous material shall be applied only to the top layer. At the time the bituminous material is applied, the surface shall be free of loose or foreign matter and shall contain sufficient moisture to prevent excessive penetration of the bituminous material. When necessary, water in sufficient quantity to fill the surface voids shall be applied immediately before the bituminous material is applied. Treated surface shall be sanded or dusted to prevent the bituminous material from being picked up by traffic.

3.8 FIELD QUALITY CONTROL

3.8.1 General

Field tests shall be performed in sufficient numbers to assure that the specifications are being met. Quality control testing shall be the responsibility of the Contractor. The following number of tests, performed at the appropriate time, will be the minimum acceptable for each type of operation.

3.8.2 Soil

At least once during each shift, there shall be a gradation analysis, a moisture content, and a set of Atterberg limits performed in accordance with ASTM C 136, ASTM D 2216, and ASTM D 4318, respectively, on the material being stabilized. The location at which samples are taken may be selected by the Contractor as the most advantageous for control.

3.8.3 Cement Content Control

The quantity of bulk cement that is spread shall be checked in two ways; spot checks and overall checks.

3.8.3.1 Spot check

To spot check, a sheet of canvas, usually 1 square yard in area, is placed ahead of the cement spreader. After the spreader has passed, the canvas and cement is weighed. The spreader is then adjusted if necessary and the procedure repeated until the correct spread per square yard is obtained.

3.8.3.2 Overall check

The overall check is made by measuring the area over which a truckload of cement of known weight is spread. This actual area is then compared with the theoretical area, which the known quantity of cement should have covered. The spreader is first adjusted at the start of construction after checking the cement spread per square yard with the canvas. Then slight adjustments are made after checking the distance over which each truckload is spread. A continuous check on cement spreading operations shall be kept.

3.8.4 Preparation for Placing

The subgrade and the construction joints shall be inspected in sufficient time prior to each soil-cement placement by the Contractor in order to certify to the Contracting Officer that it is ready to receive soil-cement.

3.8.5 Placing

The placing foreman shall supervise all placing operations and shall be responsible for measuring and recording ambient temperature, weather conditions, time of placement, yardage placed, and method of placement.

3.8.6 In Place Density Tests

One density test conforming to ASTM D 1556 or ASTM D 2922 shall be performed for each 280-foot length of an 8-foot wide paving lane, which is equivalent to one test per 250 square yards of soil cement constructed. Tests shall be performed immediately after rolling. Test ASTM D 2922 results in a wet unit weight of soil, and when using this method, ASTM D 3017 shall be used to determine the moisture content of the soil. Calibration curves furnished along with the density gauge shall be checked as described in ASTM D 3017. Calibration checks of the density gauge shall

be made at the beginning of a job on each type of material encountered. If ASTM D 2922 is used, in-place densities shall be checked by ASTM D 1556 at least once for each nuclear test until correlation is established between the two test methods. Following adequate correlation, ASTM D 1556 shall be used to check nuclear tests at a frequency of one per every 5 nuclear tests. Calibration curves and calibration test results shall be furnished within 24 hours of conclusion of the tests. The locations of tests shall be randomly distributed throughout the soil-cement which has been placed. The Contracting Officer shall be immediately notified of all density test results. A complete written report of test results shall be supplied to the Contracting Officer within 24 hours of sampling.

3.8.7 Compressive Strengths

At least one compressive strength test (two cylinders each) shall be conducted for each 250 cubic yards of soil-cement placed, and no less than two tests per shift. Tests shall determine the seven (7) day compressive strength in accordance with ASTM D 1633, Method B.

3.8.8 Grade Control

Underlying material shall be excavated to sufficient depth for the required stabilized-course thickness so that the finished stabilized course with the subsequent surface course will meet the fixed grade. Finished and completed stabilized area shall conform to the lines, grades, cross section, and dimensions indicated.

3.8.9 Smoothness Test

The surface of a stabilized layer shall show no deviations in excess of 3/8 inch when tested with the 12-foot straightedge. Deviations exceeding this amount shall be corrected by removing material and replacing new material, or by reworking existing material and compacting, as directed. Measurements for deviation from grade and cross section shown shall be taken in successive positions parallel to the road centerline with a 12-foot straightedge. Measurements shall also be taken perpendicular to the area centerline at 50-foot intervals.

3.8.10 Thickness Control

The completed thickness of the stabilized course shall be within 1/2 inch of the thickness indicated. Where the measured thickness is more than 1/2 inch deficient, such areas shall be corrected by scarifying, adding mixture of proper gradation, reblading, and recompacting as directed. Where the measured thickness is more than 1/2 inch thicker than indicated, the course shall be considered as conforming with the specified thickness requirements. Average job thickness shall be the average of all thickness measurements taken for the job, but shall be within 1/4 inch of the thickness indicated. The thickness of the stabilized course shall be measured at intervals in such a manner as to ensure one measurement for each 100 square yards of stabilized course. Measurements shall be made by taking differential elevations between the subgrade and top of the stabilized course at preselected locations.

3.8.11 Protection

At least once each shift, an inspection shall be made of all areas subject to protection from adverse weather or flows. Deficiencies shall be corrected.

3.8.12 Traffic

Completed portions of the cement-treated soil area may be opened immediately to light traffic provided the curing is not impaired. After the curing period has elapsed, completed areas may be opened to all traffic provided that the cement-stabilized course has hardened sufficiently to prevent marring or distorting of the surface by equipment or traffic. Heavy equipment shall not be permitted on the area during the curing period. Cement and water may be hauled over the area with pneumatic-tired equipment as approved. Finished portions of cement-stabilized soil that are traveled on by equipment used in constructing an adjoining section shall be protected in a manner so as to prevent equipment from marring or damaging the completed work.

3.9 DISPOSAL OF UNSATISFACTORY MATERIALS

Removed in-place materials that are unsuitable for stabilization, material that is removed for the required correction of defective areas, waste material, and debris shall be disposed of off of Government-controlled land at the completion of construction.

-- End of Section --

SECTION TABLE OF CONTENTS

DIVISION 02 - SITE WORK

SECTION 02712

LIME-STABILIZED SUBGRADE

PART 1 GENERAL

1.1 REFERENCES
1.2 MEASUREMENT FOR PAYMENT
1.2.1 Lime Stabilization
1.2.2 Lime
1.2.3 Bituminous Material
1.3 WAYBILLS AND DELIVERY TICKETS
1.4 BASIS FOR PAYMENT
1.5 DEFINITIONS
1.5.1 Lime-Stabilized Subgrade
1.5.2 Degree of Compaction
1.6 JOB DESCRIPTION
1.7 SUBMITTALS
1.8 STOCKPILING MATERIALS
1.9 PLANT, EQUIPMENT, MACHINES, AND TOOLS
1.9.1 General Requisites
1.9.2 Steel-Wheeled Rollers
1.9.3 Pneumatic-Tired Rollers
1.9.4 Mechanical Spreader
1.9.5 Sprinkling Equipment
1.9.6 Tampers
1.9.7 Straightedge
1.10 WEATHER LIMITATIONS

PART 2 PRODUCTS

2.1 MATERIALS
2.1.1 Lime
2.1.2 Bituminous Material
2.1.2.1 Emulsified Asphalt
2.1.3 Material to be Stabilized
2.1.4 Water
2.2 MIX DESIGN

PART 3 EXECUTION

3.1 LIME STABILIZATION MIXTURE
3.2 PREPARATION OF AREA TO BE STABILIZED
3.2.1 In-Place Material to be Stabilized
3.2.2 Grade Control
3.3 INSTALLATION
3.3.1 Mixed In-Place Method
3.3.1.1 Scarifying and Pulverizing of Soil
3.3.1.2 Application of Lime
3.3.1.3 Initial Mixing

3.3.1.4 Water Application and Moist Mixing
3.3.2 Edges of Stabilized Course
3.3.3 Central-Plant Method
3.3.4 Traveling-Plant Method
3.3.5 Layer Thickness
3.3.6 Compaction
3.3.7 Finishing
3.3.8 Construction Joints
3.3.9 Curing and Protection
3.3.9.1 Moist Curing
3.3.9.2 Bituminous Material
3.4 SAMPLING AND TESTING
3.4.1 General Requirements
3.4.2 Results
3.4.3 Sampling
3.4.4 Sieve Analysis
3.4.5 Liquid Limit and Plasticity Index
3.4.6 Chemical Analysis
3.4.7 Testing
3.5 FIELD QUALITY CONTROL
3.5.1 Thickness Control
3.5.2 Field Density
3.5.3 Smoothness Test
3.6 TRAFFIC
3.7 MAINTENANCE
3.8 DISPOSAL OF UNSATISFACTORY MATERIALS

-- End of Section Table of Contents --

SECTION 02712

LIME-STABILIZED SUBGRADE

PART 1 GENERAL

1.1 REFERENCES

The publications listed below form a part of this specification to the extent referenced. The publications are referred to in the text by basic designation only.

AMERICAN SOCIETY FOR TESTING AND MATERIALS (ASTM)

ASTM C 25	(1996a) Chemical Analysis of Limestone, Quicklime, and Hydrated Lime
ASTM C 50	(1994) Sampling, Inspection, Packing, and Marking of Lime and Limestone Products
ASTM C 136	(1996a) Sieve Analysis of Fine and Coarse Aggregates
ASTM D 75	(1987; R 1992) Sampling Aggregates
ASTM D 559	(1996) Wetting and Drying Compacted Soil-Cement Mixtures
ASTM D 977	(1991) Emulsified Asphalt
ASTM D 1140	(1992) Amount of Material in Soils Finer than the No. 200 (75-micrometer) Sieve
ASTM D 1250	(1980; R 1990) Petroleum Measurement Tables
ASTM D 1556	(1990; R 1996) Density and Unit Weight of Soil in Place by the Sand-Cone Method
ASTM D 1557	(1991) Laboratory Compaction Characteristics of Soil Using Modified Effort (56,000 ft-lbf/cu. ft. (2,700 kN-m/cu.m.))
ASTM D 1632	(1996) Making and Curing Soil-Cement Compression and Flexure Test Specimens in the Laboratory
ASTM D 1633	(1996) Compressive Strength of Molded Soil-Cement Cylinders
ASTM D 2027	(1976; R 1992) Cutback Asphalt (Medium-Curing Type)
ASTM D 2922	(1996) Density of Soil and Soil-Aggregate

	in Place by Nuclear Methods (Shallow Depth)
ASTM D 3017	(1988; R 1993) Water Content of Soil and Rock in Place By Nuclear Methods (Shallow Depth)
ASTM D 3740	(1996) Minimum Requirements for Agencies Engaged in the Testing and/or Inspection of Soil and Rock as Used in Engineering Design and Construction
ASTM D 4318	(1995a) Liquid Limit, Plastic Limit, and Plasticity Index of Soils
ASTM D 5255	(1992)Certification of Personnel Engaged in the Testing of Soil and Rock
ASTM E 329	(1990) Evaluation of Testing and Inspection Agencies as Used in Construction
ASTM E 11	(1995) Wire-Cloth Sieves for Testing Purposes

1.2 MEASUREMENT FOR PAYMENT

1.2.1 Lime Stabilization

Measurement will be by the cubic yard of work completed and accepted.

1.2.2 Lime

Measurement will be by the number of 2000 pound tons of lime used in the completed and accepted work. No measurement will be made for wasted lime or lime used in work determined defective. No additional compensation shall be forthcoming for lime used in excess of the approved mix design concentration.

1.2.3 Bituminous Material

Bituminous material to be paid for will be measured in the number of 2000 pound tons of the material used in the accepted work; no additional compensation shall be forthcoming for material used in excess of the application quantities specified herein.

1.3 WAYBILLS AND DELIVERY TICKETS

Copies of waybills or delivery tickets shall be submitted during the progress of the work. Before the final payment is allowed waybills and certified delivery tickets shall be furnished for all lime and bituminous materials used in the construction.

1.4 BASIS FOR PAYMENT

There are no line items in the current Pricing Schedule for this work; Lime stabilization, constructed and accepted, including lime and bituminous material will be paid for at the negotiated contract unit prices in the bidding schedule. No payment will be made for any material wasted, used for the convenience of the Contractor, unused or rejected, or for water used. No separate payment will be made for sanding or dusting the

bituminous prime-coated surfaces, and all costs for sanding or dusting shall be included in the contract unit price for bituminous material.

1.5 DEFINITIONS

1.5.1 Lime-Stabilized Subgrade

Lime-stabilized subgrade, as used in this specification, is a mixture of lime and in-place uniformly blended, wetted, and thoroughly compacted subgrade soils that will produce a subgrade which meets the criteria set forth in the plans and this specification.

1.5.2 Degree of Compaction

Degree of compaction required is expressed as a percentage of the maximum density obtained by the test procedure presented in ASTM D 1557 Procedure C, abbreviated as percent laboratory maximum dry density.

1.6 JOB DESCRIPTION

The work specified consists of the construction of a lime-stabilized subgrade. The work shall be performed in accordance with this specification and shall conform to the lines, grades, notes, and typical sections shown in the drawings. Sources of materials shall be selected well in advance of the time when materials will be required in the work.

1.7 SUBMITTALS

Government approval is required for submittals with a "GA" designation; submittals having an "FIO" designation are for information only. The following shall be submitted in accordance with Section 01330 SUBMITTAL PROCEDURES:

SD-01 Data

Plant, Equipment, Machines, and Tools; GA. Mix Design; GA.

List of proposed equipment to be used in performance of construction work including descriptive data. Mix design at least 30 days before it is to be used.

SD-09 Reports

Sampling and Testing; GA. Field Density; GA.

Calibration curves and related test results prior to using the device or equipment being calibrated. Copies of field test results within 24 hours after the tests are performed. Certified copies of test results of materials and sources not less than 30 days before material is to be delivered to the site.

SD-13 Certificates

Testing; FIO.

Qualifications of the commercial testing laboratory or Contractor's testing facilities in accordance with ASTM D 3740 and ASTM E 329. Qualifications of testing personnel in accordance with ASTM D 5255.

SD-18 Records

Waybills and Delivery Tickets; FIO.

Copies of waybills and delivery tickets during the progress of the work. Certified waybills and delivery tickets for all materials actually used.

1.8 STOCKPILING MATERIALS

Excavated material, lime, and other approved materials shall be stockpiled in the manner and at the locations designated. Before stockpiling material, storage sites shall be cleared and sloped to drain. Materials obtained from different sources shall be stockpiled separately.

1.9 PLANT, EQUIPMENT, MACHINES, AND TOOLS

1.9.1 General Requisites

Plant, equipment, machines, and tools used in the work shall be subject to approval and shall be maintained in satisfactory working condition at all times. Other compacting equipment may be used in lieu of that specified, where it can be demonstrated that the results are equivalent. Protective equipment, apparel, and barriers shall be provided to protect the eyes, respiratory system, and the skin of workers exposed to contact with lime dust or slurry.

1.9.2 Steel-Wheeled Rollers

Steel-wheeled rollers shall be the self-propelled type weighing not less than 20,000 pounds, with a minimum weight of 300 pounds/inch width of rear wheel. Wheels of the rollers shall be equipped with adjustable scrapers. The use of vibratory rollers is optional.

1.9.3 Pneumatic-Tired Rollers

Pneumatic-tired rollers shall be loaded to weigh a minimum of 25,000 pounds and have four or more tires. Tires shall be inflated to a minimum pressure of 60 psi. The loading shall be equally distributed to all wheels, and the tires shall be uniformly inflated. Towing equipment shall also be pneumatic-tired.

1.9.4 Mechanical Spreader

Mechanical spreader shall be self-propelled or attached to a propelling unit capable of moving the spreader and material truck. The device shall be steerable and shall have variable speeds forward and reverse. The spreader and propelling unit shall be carried on tracks, rubber tires, or drum-type steel rollers that will not disturb the underlying material. The spreader shall contain a hopper, an adjustable screed, and outboard bumper rolls; and shall be designed to have a uniform, steady flow of material from the hopper. The spreader shall be capable of laying material without segregation across the full width of the lane to a uniform thickness and to a uniform loose density so that when compacted, the layer or layers shall conform to thickness and grade requirements indicated. The Contracting Officer may require a demonstration of the spreader prior to approving use in performance of the work.

1.9.5 Sprinkling Equipment

Sprinkling equipment shall consist of tank trucks, pressure distributors, or other approved equipment designed to apply controlled quantities of water uniformly over variable widths of surface.

1.9.6 Tampers

Tampers shall be of an approved mechanical type, operated by either pneumatic pressure or internal combustion, and shall have sufficient weight and striking power to produce the compaction required.

1.9.7 Straightedge

The Contractor shall furnish and maintain at the site, in good condition, one 12-foot straightedge, for use in the testing of the finished surface. Straightedge shall be made available for Government use. Straightedges shall be constructed of aluminum or other lightweight metal and shall have blades of box or box-girder cross section with flat bottom reinforced to insure rigidity and accuracy. Straightedges shall have handles to facilitate movement on pavement.

1.10 WEATHER LIMITATIONS

Work on the subgrade shall not be performed during freezing temperatures. Any areas of stabilized subgrade that are damaged by freezing, rainfall, or other weather conditions shall be brought to a satisfactory condition without additional cost to the Government. Lime shall not be applied when the atmospheric temperature is less than 40 degrees F. No lime shall be applied to soils that are frozen or contain frost, or when the underlying material is frozen. If the temperature falls below 35 degrees F, the completed lime-treated areas shall be protected against any detrimental effects of freezing.

PART 2 PRODUCTS

2.1 MATERIALS

2.1.1 Lime

Lime shall be a standard brand of quicklime or hydrated lime conforming to the following physical and chemical requirements:

a. Lime shall be of such gradation that 99-1/2 percent passes a No. 20 sieve and a minimum of 85 percent passes a No. 100 sieve.

b. Combined calcium oxide and magnesium oxide shall be not less than 92 percent.

2.1.2 Bituminous Material

Material shall conform to one of the following:

2.1.2.1 Emulsified Asphalt

ASTM D 977, Type SS-1.

2.1.3 Material to be Stabilized

Material to be stabilized shall consist of in-place material in the area or

approved imported clayey materials. Material shall be free of deleterious substances such as sticks, debris, organic matter, and stones greater than 2 inches in any dimension. At least 30 percent of the material shall pass the No. 40 sieve. Plasticity index shall be greater than 12.

2.1.4 Water

Water shall be clean and free from oil, acid, salt, alkali, organic matter, and other substances deleterious to the lime or soil-lime mixture. Water source shall be subject to approval.

2.2 MIX DESIGN

The Contractor shall develop and submit for approval a proposed mix design prior to stabilization work. Mix shall be developed using samples of the material to be stabilized. Mix design shall be capable of producing a minimum compressive strength of 150 psi when compacted to the design percent of laboratory maximum density. Samples shall not show any significant loss of strength after 12 cycles of the durability test.

PART 3 EXECUTION

3.1 LIME STABILIZATION MIXTURE

The material to be stabilized shall be thoroughly pulverized and, when lime is applied in the dry state, the mix shall be thoroughly blended at a moisture content below optimum. After mixing is completed, the proportions of the mixture shall be in accordance with the approved mix design. After blending, water shall be blended into the dry mix in amounts necessary to bring the moisture content to optimum. Field moisture content shall be controlled within plus or minus 2 percent of optimum. When the stabilized course is constructed in more than one layer, the previously constructed layer shall be cleaned of loose and foreign matter by sweeping with power sweeper or power brooms except that hand brooms may be used in areas where power cleaning is not practicable. Adequate drainage shall be provided during the entire construction period to prevent water from collecting or standing on the area to be stabilized or on pulverized, mixed, or partially mixed material. Line and grade stakes shall be provided as necessary for control. Grade stakes shall be in lines parallel to the centerline of the area under construction and suitably spaced for string lining.

3.2 PREPARATION OF AREA TO BE STABILIZED

The area shall be cleaned of debris. The area will be inspected for adequate compaction and shall be capable of withstanding, without displacement, the compaction specified for the soil-lime mixture. Debris and removed unsatisfactory in-place material shall be disposed of as specified.

3.2.1 In-Place Material to be Stabilized

The entire area shall be graded to conform to the lines, grades, and cross sections shown in the plans prior to being processed. Soft or yielding subgrade areas shall be made stabilized before construction is begun.

3.2.2 Grade Control

Underlying material shall be excavated to sufficient depth for the required stabilized-course thickness so that the finished stabilized course with the

subsequent surface course will meet the fixed grade. Finished and completed stabilized area shall conform to the lines, grades, cross section, and dimensions indicated.

3.3 INSTALLATION

3.3.1 Mixed In-Place Method

3.3.1.1 Scarifying and Pulverizing of Soil

Prior to application of lime, the soil shall be scarified and pulverized to the depth shown. Depth of pulverizing shall not exceed the depth of scarification.

3.3.1.2 Application of Lime

Pulverized material shall be shaped to approximately the cross section indicated. Lime shall be applied so that when uniformly mixed with the soil, the specified lime content is obtained, and a sufficient quantity of lime-treated soil is produced to construct a compacted lime-treated course conforming to the lines, grades, and cross section indicated. Mechanical spreaders shall be used in applying bulk lime. Distributors shall be used in applying lime slurries. If lime is spread by hand, the bags shall be spotted accurately on the area being stabilized so that when the bags are opened the lime will be dumped and spread uniformly on the area being processed. No equipment except that used in spreading and mixing shall pass over the freshly applied lime.

3.3.1.3 Initial Mixing

Immediately after the lime has been distributed, the lime and soil shall be mixed. Initial mixing shall be sufficient to alleviate any dusting or wetting of the lime that might occur in the event of wind or rainstorms. This may be accomplished several days in advance of the final application and mixing.

3.3.1.4 Water Application and Moist Mixing

Moisture content of the mixture shall be determined in preparation for final mixing. Moisture in the mixture following final mixing shall not be less than the water content determined to be optimum based on dry weight of soil and shall not exceed the optimum water content by more than 2 percentage points. Water may be added in increments as large as the equipment will permit; however, such increment of water shall be partially incorporated in the mix to avoid concentration of water near the surface. After the last increment of water has been added, mixing shall be continued until the water is uniformly distributed throughout the full depth of the mixture, including satisfactory moisture distribution along the edges of the section.

3.3.2 Edges of Stabilized Course

Approved material shall be placed along the edges of the stabilized course in a quantity that will compact to the thickness of the course being constructed, or to the thickness of each layer in a multiple-layer course, allowing at least a 1 foot width of the shoulder to be rolled and compacted simultaneously with the rolling and compacting of each layer of the stabilized course.

3.3.3 Central-Plant Method

Plant shall be capable of producing a uniform lime-treated mixture at the specified lime and moisture contents. Mixture shall be hauled to the job in trucks equipped with protective covers. Underlying course shall be thoroughly moistened and the mixture then placed on the prepared area in a uniform layer with mechanical spreaders. The layer shall be uniform in thickness and surface contour; and the completed layer, after compaction, shall conform to the required grade and cross section.

3.3.4 Traveling-Plant Method

Traveling plant shall move at a uniform rate of speed and shall accomplish thorough mixing of the materials in one pass. Water and lime shall be delivered from supply trucks or bins at a predetermined rate. Windrows of prepared soil-lime mixture shall cover a predetermined width to the indicated compacted thickness.

3.3.5 Layer Thickness

Compacted thickness of the stabilized course shall be as indicated. No layer shall be more than 8 inches or less than 3 inches in compacted thickness.

3.3.6 Compaction

Before compaction operations are started and as a continuation of the mixing operation, the mixture shall be thoroughly loosened and pulverized to the full depth. Compaction shall be started immediately after mixing is completed. During final compaction, the surface shall be moistened, if necessary, and shaped to the required lines, grades, and cross section. Density of compacted mixture shall be at least 95 percent of laboratory maximum dry density. Rolling shall begin at the outside edge of the surface and proceed to the center, overlapping on successive trips at least one-half the width of the roller. Alternate trips of the roller shall be slightly different lengths. At all times, the speed of the roller shall not cause displacement of the mixture to occur. Areas inaccessible to the rollers shall be compacted with mechanical tampers, and shall be shaped and finished by hand methods.

3.3.7 Finishing

The surface of the top layer shall be finished to the grade and cross section shown. The surface shall be of uniform texture. Light blading during rolling may be necessary for the finished surface to conform to the lines, grades, and cross sections. If the surface for any reason becomes rough, corrugated, uneven in texture, or traffic-marked prior to completion, the unsatisfactory portions shall be scarified, reworked, relaid, or replaced as directed. If any portion of the course, when laid, becomes watersoaked for any reason, that portion shall be removed immediately, and the mix placed in a windrow and aerated until a moisture content within the limits specified is obtained; and then spread, shaped, and rolled as specified above.

3.3.8 Construction Joints

At the end of each phase of construction, a straight transverse construction joint shall be formed by cutting back into the completed work to form a true vertical face free of loose or shattered material. Material

along construction joints not properly compacted shall be removed and replaced with soil-lime mixture that is mixed, moistened, and compacted as specified.

3.3.9 Curing and Protection

Immediately after the soil-lime area has been finished as specified above, the surface shall be protected against rapid drying for 7 days by one of the methods specified below.

3.3.9.1 Moist Curing

The area shall be moistened by sprinkling and shall be kept moist for the 7-day curing period.

3.3.9.2 Bituminous Material

Bituminous material shall be uniformly applied by means of a bituminous distributor within a temperature range of 70 to 160 degrees F. Bituminous material shall be applied in quantities of not less than 0.1 gallon per square yard nor more than 0.25 gallon per square yard. The final application rate shall be determined bases on curing and absorption after field application. Areas inaccessible to or missed by the distributor shall be properly treated using the manually operated hose attachment. Bituminous material shall be applied only to the top layer. At the time the bituminous material is applied, the surface of the area shall be free of loose or foreign matter and shall contain sufficient moisture to prevent excessive penetration of the bituminous material. When necessary, the area shall be sprinkled immediately before the bituminous material is applied. Treated surface shall be sanded to prevent the bituminous material from being picked up by traffic.

3.4 SAMPLING AND TESTING

3.4.1 General Requirements

Sampling and testing shall be performed by an approved commercial testing laboratory or by facilities furnished by the Contractor. Testing facilities shall meet the requirements outlined in ASTM D 3740 and ASTM E 329. Testing personnel shall shall meet the requirements of ASTM D 5255. Work requiring testing will not be permitted until the facilities have been inspected and approved. The first inspection will be at the expense of the Government. Cost incurred for any subsequent inspection required because of failure of the facilities to pass the first inspection will be charged to the Contractor. Tests shall be performed in sufficient numbers and at the locations and times directed to ensure that materials and compaction meet specified requirements. Certified copies of the test results shall be furnished to the Contracting Officer.

3.4.2 Results

Results shall verify that materials comply with the specification. When deficiencies are found, the initial analysis shall be repeated and the material already placed shall be retested to determine the extent of unacceptable material. All in-place unacceptable material shall be replaced at no additional cost to the Government.

3.4.3 Sampling

All aggregate samples for laboratory testing shall be taken in accordance with ASTM D 75. Samples of lime shall be taken in accordance with ASTM C 50. Specimens for the unconfined compression tests shall be prepared in accordance with ASTM D 1632.

3.4.4 Sieve Analysis

Before starting work, one sample of the material to be stabilized shall be tested in accordance with ASTM C 136 and ASTM D 1140 on sieves conforming to ASTM E 11. After the initial test, a minimum of two analysis shall be performed for each 1000 square yards of material placed, with a minimum of three analyses for each day's run until subgrade stabilization is completed.

3.4.5 Liquid Limit and Plasticity Index

One liquid limit and plasticity index shall be performed for each sieve analysis. Liquid limit and plasticity index shall be in accordance with ASTM D 4318.

3.4.6 Chemical Analysis

Lime shall be tested for the specified chemical requirements in accordance with ASTM C 25. Three tests shall be conducted for each delivery of lime.

3.4.7 Testing

Unconfined compression tests shall be conducted in accordance with ASTM D 1633. Three tests shall be conducted for each mix design tested. Samples shall be cured at a constant moisture content and temperature for 28 days. Wet-dry tests shall be conducted in accordance with ASTM D 559. Three tests shall be conducted for each mix design tested. Scratch portion of the test shall be omitted.

3.5 FIELD QUALITY CONTROL

Tests shall provide a moisture-density relationship for the lime-soil mixture. Results of field quality control testing shall verify that materials comply with this specification. When a material source is changed, the new material shall be tested for compliance. When deficiencies are found, the initial analysis shall be repeated and the material already placed shall be retested to determine the extent of unacceptable material. All in-place unacceptable material shall be replaced or repaired, as directed by the Contracting Officer, at no additional cost to the Government.

3.5.1 Thickness Control

Thickness of the stabilized course shall be determined by penetrating the stabilized course with 3-inch drilled cores at the interval specified. Core holes will be filled with lime treated subgrade material after removal is complete. Completed thicknesses of the stabilized course shall be within 1/2 inch of the thickness indicated. Where the measured thickness of the stabilized course is more than 1/2 inch deficient, such areas shall be corrected by scarifying, adding mixture of proper gradation, reblading, and recompacting as directed. Where the measured thickness of the stabilized course is more than (1/2 inch thicker than indicated, it shall be considered as conforming to the specified thickness requirement. Average job thickness shall be the average of all thickness measurements taken for the job, but shall be within 1/4 inch of the thickness indicated. No

additional compensation shall be forthcoming for average job thicknesses in excess of 1/4 inch of the thickness indicated. Thickness of the stabilized course shall be measured at intervals which ensure one measurement for each 500 square yards of stabilized course. Isolated patch areas shall be individually tested with one core at each location.

3.5.2 Field Density

Field in-place density shall be determined in accordance with ASTM D 1556 and ASTM D 2922. When ASTM D 2922 is used, the calibration curves shall be checked, and adjusted if necessary, using the sand cone method as described in paragraph Calibration of the ASTM publication. When ASTM D 2922 is used, the Contractor shall obtain all necessary permits and authorizations for the use of the nuclear gage. ASTM D 2922 results in a wet unit weight of soil and when using this method, ASTM D 3017 shall be used to determine the moisture content of the soil. The calibration curves furnished with the moisture gauges shall be checked along with density calibration checks as described in ASTM D 3017. If ASTM D 2922 is used, in-place densities shall be checked by ASTM D 1556 at least once per lift for each set of five nuclear density tests. Calibration curves and calibration tests results shall be furnished to the Contracting Officer within 24 hours of conclusion of the tests. At least one field density test shall be performed for each 250 square yards of each layer of stabilized subgrade material. Isolated patch areas shall be tested with one test at each location.

3.5.3 Smoothness Test

The surface of a stabilized layer shall show no deviations in excess of 3/8 inch when tested with the 12-foot straightedge. Deviations exceeding this amount shall be corrected by removing material and replacing with new material, or by reworking existing material and compacting, as directed. Measurements for deviation from grade and cross section shown shall be taken at the edges and centerlines of the stabilized areas in successive positions in the longitudinal and transverse directions at 50-foot intervals.

3.6 TRAFFIC

Completed portions of the lime-treated soil area may be opened immediately to light traffic provided the curing is not impaired. After the curing period has elapsed, completed areas may be opened to all traffic, provided the stabilized course has hardened sufficiently to prevent marring or distorting of the surface by equipment or traffic. Heavy equipment shall not be permitted on the area during the curing period. Lime and water may be hauled over the completed area with pneumatic-tired equipment if approved. Finished portions of lime-stabilized soil that are traveled on by equipment used in constructing an adjoining section shall be protected in a manner to prevent equipment from marring or damaging completed work.

3.7 MAINTENANCE

Stabilized area shall be maintained in a satisfactory condition until the completed work is accepted. Maintenance shall include immediate repairs of any defects and shall be repeated as often as necessary to keep the area intact. Defects shall be corrected as specified herein.

3.8 DISPOSAL OF UNSATISFACTORY MATERIALS

Removed in-place materials that are unsuitable for stabilization, material

that is removed for the required correction of defective areas, waste material, and debris shall be disposed of off of Government-controlled land unless otherwise authorized. Disposal shall be in conformance with local environmental regulations.

-- End of Section --

SECTION TABLE OF CONTENTS

DIVISION 02 - SITE WORK

SECTION 02715

CHEMICALLY-STABILIZED AND SEALED SUBGRADE

PART 1 GENERAL

1.1 SCOPE OF WORK
1.2 REFERENCES
1.3 UNIT PRICES
1.3.1 Measurement and Payment
1.3.2 Quality Control
1.4 DEFINITIONS
1.4.1 Stabilization and Sealing
1.4.2 Degree of Compaction
1.4.3 Water Content
1.4.4 Emulsion and Product
1.4.5 Stabilizer-Sealant Solution
1.5 SUBMITTALS

PART 2 PRODUCTS

2.1 STABILIZERS AND SEALANTS
2.1.1 Concentrated Liquid Stabilizer
2.1.1.1 Application Requirements
2.1.1.2 Protection
2.1.2 Earth Materials Sealant
2.1.2.1 Application Requirements

PART 3 EXECUTION

3.1 PREPARATION OF SURFACE
3.2 APPLICATION OF STABILIZER-SEALANT SOLUTION
3.2.1 General
3.2.2 Atmospheric Temperature
3.2.3 Weather Conditions
3.2.4 Application Rate
3.2.5 Quantity of Water Required
3.2.5.1 General
3.2.5.2 Arid and Semi-Arid Regions
3.2.5.3 Other Conditions
3.2.5.4 Stabilizer-Sealant-Water Mixing
3.2.6 Application Methods
3.2.7 Soil and Stabilizer-Sealant Solution Blending
3.2.7.1 Precautions
3.2.8 Compaction
3.2.8.1 General
3.2.8.2 Equipment
3.2.8.3 Lift Thickness
3.2.8.4 Grading
3.2.9 Curing and Return to Service

3.3 FIELD TESTING CONTROL
3.3.1 Test Result Submittal
3.3.2 Test Schedule and Locations
3.3.2.1 Preconstruction Testing
3.3.2.2 Construction Testing
3.3.3 Classification and Moisture-Density Relationships
3.3.4 Field Density with Moisture Content

-- End of Section Table of Contents --

SECTION 02715

CHEMICALLY-STABILIZED AND SEALED SUBGRADE

PART 1 GENERAL

1.1 SCOPE OF WORK

The work specified herein is an alternative to traditional lime and cement subgrade stabilization. The work specified herein consist of furnishing and placing a stabilizer and sealant treatment. The specified products are applied in a water solution on a prepared surface course; mixing suitable in-place or borrow material with the stabilizer and sealant solution; compacting the mixture to the lines, grades and dimensions as shown on the Contract Drawings; and upon completion providing a surface that is smooth and in conformance with the typical section, lines and grades as shown on the Contract Drawings.

1.2 REFERENCES

The publications listed below form a part of this specification to the extent referenced. The publications are referred to in the text by basic designation only.

AMERICAN SOCIETY FOR TESTING AND MATERIALS (ASTM)

ASTM D 1556	(1990; R 1996) Density and Unit Weight of Soil in Place by the Sand-Cone Method
ASTM D 1557	(1991) Laboratory Compaction Characteristics of Soil Using Modified Effort (56,000 ft-lbf/cu. ft. (2,700 kN-m/cu.m.))
ASTM D 1559	(1989) Resistance to Plastic flow of Bituminous Mixtures Using Marshall Apparatus
ASTM D 1883	(1994) CBR (California Bearing Ratio) of Laboratory-Compacted Soils
ASTM D 2166	(1991) Unconfined Compressive Strength of Cohesive Soil
ASTM D 2216	(1992) Laboratory Determination of Water (Moisture) Content of Soil and Rock
ASTM D 2487	(1993) Classification of Soils for Engineering Purposes (Unified Soil Classification System)
ASTM D 3740	(1996) Minimum Requirements for Agencies Engaged in the Testing and/or Inspection of Soil and Rock as Used in Engineering

	Design and Construction
ASTM D 4429	(1993) Bearing Ratio for Soils In Place
ASTM D 4609	(1994) Evaluating Effectiveness of Chemicals for Soil Stabilization
ASTM D 5255	(1992) Certification of Personnel Engaged in the Testing of Soil and Rock

1.3 UNIT PRICES

1.3.1 Measurement and Payment

Chemical stabilization, constructed and accepted, will be paid for at the contract unit price per square yard of work completed and accepted for Chemical stabilized and sealed subgrades. Payment shall be for the particular option year Line Item _005 "Penetration Oil Treatment" of the Pricing Schedule. No payment will be made for any material wasted, used for the convenience of the Contractor, unused or rejected.

1.3.2 Quality Control

Quality control work as specified herein shall be considered as part of the Contract cost for stabilization and sealing; no additional compensation shall be forthcoming for specified quality control work.

1.4 DEFINITIONS

1.4.1 Stabilization and Sealing

Stabilization and sealing is a process by which the soil materials or aggregate base or subbase is disked and pulverized, moisture conditioned, and stabilized and sealed with a dual component soil stabilization system. The soil stabilization system consists of a concentrated liquid stabilizer and a complementary non-petroleum, resinous polymeric emulsion earth materials sealant as described herein after. The stabilizer and earth materials sealant shall be formulated for the application in combination, individually added to the compaction water and then applied as a single step in the compaction process. The result is a compacted subgrade that is substantially stronger than untreated compacted subgrade.

1.4.2 Degree of Compaction

Degree of compaction is a percentage of the maximum density obtained by the test procedure presented in ASTM D 1557, Procedure C, abbreviated below as a percent of laboratory maximum dry density.

1.4.3 Water Content

The water content, also referred to as moisture content, of a material is the ratio, expressed as a percentage of the mass of "pore" or "free" water in a given mass of material to the mass of solid material. Water content shall be determined by the test procedure outlined in ASTM D 2216.

1.4.4 Emulsion and Product

Emulsion and product as referred to herein are the non-diluted products with the Trade Names: EMC SQUARED and EMS (Earth Materials Sealant), or

their approved equals.

1.4.5 Stabilizer-Sealant Solution

Stabilizer-sealant solution as referred to herein are the water diluted and blended emulsions and products.

1.5 SUBMITTALS

Government approval is required for submittals with a "GA" designation; submittals having an "FIO" designation are for information only. The following shall be submitted in accordance with Section 01330 SUBMITTAL PROCEDURES:

SD-08 Statements

Field Testing Control; GA, Inspection and Acceptance; GA.

Qualifications of the commercial testing laboratory who will be performing all testing in accordance with paragraph FIELD TESTING CONTROL. Sampling may be taken by the Buyer to validate adherence to specifications.

SD-09 Reports

Field Testing Control; GA, Environmental Acceptability; FIO

Certified test reports of all tests conducted in accordance with paragraph FIELD TESTING CONTROL. Upon request, the supplier must be able to provide independent laboratory test reports from a certified analytical laboratory experienced in environmental acceptability testing documenting tests performed on product samples of the stabilizer and earth materials sealant. These tests must include the US EPA 7000 Series (TTLC or CAM17) for metals and Method 8270 testing which verify no organic solvents or identifiable EPA 8270 target compounds were detected in amounts which exceed US EPA or State of California regulatory standards as applicable to products whose intended use involves incorporation into compacted aggregate and soil materials during construction operations.

SD-13 Certificates

Testing; GA.

Qualifications of the commercial testing laboratory or Contractor's testing facilities in accordance with ASTM D 3740 and ASTM E 329. Qualifications of testing personnel in accordance with ASTM D 5255.

SD-13 Certificates

Certification; FIO.

With each load of chemicals, the truck driver shall present to the Contracting Officer's Representative on site, one copy of a fully executed Certificate of Compliance provided by materials supplier conforming to the following format:

MATERIALS CERTIFICATION

Consignee:_____Designation:_____Date:_____

Contract Number:_____Purchase Order No._____

Identification (Truck #, etc.):_____

Net Weight of Total Shipment:_____

Brand Name:_____

This shipment of _____, identified above and covered by this Certification, complies with the specifications applicable to this project.

Materials Supplier:_____

Signed:_____
Material Supplier's Representative

PART 2 PRODUCTS

2.1 STABILIZERS AND SEALANTS

The dual component soil stabilization system shall consist of a concentrated liquid stabilizer and a complementary non-petroleum, resinous polymeric emulsion earth materials sealant as described herein after. The stabilizer and earth materials sealant shall be formulated for the application in combination, individually added to the compaction water and then applied as a single step in the construction process. The stabilizer and earth materials sealant shall be proven chemically compatible as demonstrated by effectiveness in improving and soil stability in laboratory testing by independent materials testing laboratories and as demonstrated in field application by providing effective stabilization of soil materials used as the surface course of the airfield shoulders.

2.1.1 Concentrated Liquid Stabilizer

The material shall be EMC SQUARED Stabilizer as supplied by Soil Stabilization products Company, Inc., Merced CA, 1(209) 383-3296 or 1(800) 523-9992, or approved equal. It shall be a concentrated liquid biocatalyst stabilizer formulated specifically for improving the stability of soils, select fill materials, and aggregates for use in construction of earthworks, subgrades, subbases, base courses, and for surface course materials used in construction and maintenance of unpaved roads, runways, shoulders, and other traffic surfaces. The stabilizer shall be suitable for dilution in a water solution to allow for adequate dispersion of the liquid concentrate. The pH of the concentrated stabilizer shall be not less than 6 and not higher than 10. The stabilizer shall be nonhazardous, non-toxic, nonflammable, and noncorrosive. It shall not be a byproduct or additive used primarily for dust control of road surfaces. The stabilizer shall be capable of being handled without the use of protective breathing apparatus or protective clothing. A standard materials Safety Data Sheet shall be furnished by the supplier.

2.1.1.1 Application Requirements

When applied at an application rate of not less than one gallon of EMC SQUARED and two gallons of EMS per 15 cubic yards of soil. The tolerance from the specified addition rate shall be plus or minus 10 percent. When

placed within the manufacturer's parameters for dilution, moisture control, processing, compaction and curing, the stabilizer solution shall increase the compressive strength, stability, tensile strength, resistance to moisture and frost damage, and resistance to erosion by wind and water. Evidence of the effectiveness of the stabilizer shall be available from materials testing laboratories, independent from the manufacturer or supplier. Laboratory test history shall include treated soil classifications (in accordance with ASTM D 2487), CBR (California Bearing Ratio), Compaction Characteristics, Marshall Stability, R Value, Shear Strength, Split Tension, Laboratory Suction and Dielectric Measurement, and Unconfined Compression Strength test reports.

2.1.1.2 Protection

The stabilizer shall be protected during transportation and storage. An airtight seal shall be maintained to protect against air contamination. Any product which has been left open to air contamination shall be rejected.

2.1.2 Earth Materials Sealant

The material shall be EMS EARTH MATERIALS SEALANT, as supplied by Soil Stabilization products Company, Inc., Merced CA, 1(209) 383-3296 or 1(800) 523-9992, or approved equal. It shall be specifically formulated for compatibility with the EMC SQUARED Stabilizer for use in protecting compacted soil materials against moisture infiltration and for reducing the hydraulic conductivity of soil liners constructed for moisture barrier and water retention applications. The earth materials sealant shall be suitable for dilution in a water solution to allow for adequate dispersion of the liquid concentrate. The pH of the concentrated sealant shall be not less than 6 and not higher than 10. The earth materials sealant shall be a non-petroleum resinous polymeric emulsion that is nonhazardous, non-toxic, nonflammable and non corrosive. It shall not be a byproduct or additive used primarily for dust control of road surfaces. The stabilizer shall be capable of being handled without the use of protective breathing apparatus or protective clothing. A standard materials Safety Data Sheet shall be furnished by the supplier.

2.1.2.1 Application Requirements

When applied at an application rate of not less than one gallon of EMC SQUARED and two gallons of EMS per 15 cubic yards of soil and within the manufacturer's parameters for dilution, moisture control, processing, compaction and curing, the stabilizer and earth materials sealant solution shall improve the shear strength and the bearing strength and reduce the moisture susceptibility of the soil materials. Evidence of the effectiveness of the stabilizer shall be available from materials testing laboratories, independent from the manufacturer or supplier. Laboratory test history shall include R Value, Shear Strength, Suction and Dielectric Measurement, and Unconfined Compression Strength test reports, demonstrating that the stabilizer and earth material sealant combination have been effective in improvement of both granular, non-plastic materials and cohesive, highly plastic soils.

PART 3 EXECUTION

3.1 PREPARATION OF SURFACE

If an in-place soil or aggregate material is to be stabilized which is not

already in a loose state, it must first be ripped, scarified, disked or roto tilled into a well-pulverized mixture for a minimum depth of 6 inches. If the stabilization project involves the treatment of heavy clay soils, the Contracting Officer may specify the use of cross-shaft rotary mixer to assure proper pulverization and mixing. **If the material to be treated is already at or above the optimum moisture content, it must be dried to a minimum of two percentage points below the optimum water content in preparation for addition of the stabilizer and sealant solution**. Do not pre wet the soil or aggregate prior to applying the stabilizer and sealant solution.

3.2 APPLICATION OF STABILIZER-SEALANT SOLUTION

3.2.1 General

Application of the stabilizer-sealant solution shall be limited to the area specifically shaped and sized to receive the solution, and it shall be limited to such an area that all operations including mixing and compaction can be continuous and completed in one day. If overnight temperatures will not drop below 32 degrees F, it is the Contracting Officer's option to allow treated material to remain in a stockpile or winrow overnight with the precaution that the moisture must still be properly adjusted for compaction operations.

3.2.2 Atmospheric Temperature

The stabilizer-sealant solution shall not be applied or mixed with in-place material if atmospheric temperature is below 50 degrees F, or when conditions indicate that the temperature will be below 32 degrees F within 24 hours unless the Contracting Officer approves application in colder conditions for special project requirements.

3.2.3 Weather Conditions

Unless otherwise indicated by the Contracting Officer, application of the stabilizer-sealant solution shall be limited to periods when rainfall is not expected during the application or during the 24 hour period following application. If rainfall occurs during application, mixing and compaction and excessive loss of solution due to washing occurs, stabilizer-sealant solution will not be accepted for payment.

3.2.4 Application Rate

Unless otherwise indicated, the EMC SQUARED and EMS stabilizer and sealant solution shall be applied at one gallon of EMC SQUARED and two gallons of EMS per 15 cubic yards of material to be treated. The tolerance from the specified addition rate is not more than plus or minus 10 percent.

3.2.5 Quantity of Water Required

3.2.5.1 General

The amount of water to be used shall be calculated to bring the soil or aggregate material to be treated to optimum moisture content per the materials testing information provided by the Contracting Officer. For soil and aggregate materials that have been determined to have a clay fraction as indicated by a Plasticity index (P.I.) of 5 or greater, the optimum moisture content for field construction should be lowered by one percentage point from that determined in the laboratory for the untreated

material. **In any case, the moisture content for the treated soil or aggregate material <u>at the time of compaction</u> shall be not more than 1 percentage point above or more than 2 percentage points below the optimum moisture content as determined for the untreated soil by ASTM D 1557 and verified in the field by ASTM D 2216.**

3.2.5.2 Arid and Semi-Arid Regions

In arid and semi-arid regions and during periods of hot and windy weather in other regions, considerable amounts of water may be required to bring the treated material up to the optimum moisture content. It is generally recommended that soils be worked on the dry side of the optimum moisture content when constructing projects in arid or semi-arid regions.

3.2.5.3 Other Conditions

In conditions where the in-place material to be treated is already close to optimum moisture content, a minimum of two percent water must be added to the stabilizer-sealant solution in order to properly disperse the highly concentrated treatment system. Use soil mixing and aeration procedures to dry-back aggregate or soil as required to allow for the addition of the proper quantity of stabilizer and sealant solution.

3.2.5.4 Stabilizer-Sealant-Water Mixing

A metered pump shall be used to add the stabilizer and sealant to the water. The capacity of the mixing tank should be determined to allow for accurate proportioning of the stabilizer-sealant solution. The water tank shall be partially filled with water, the stabilizer and sealant added, then the required remaining quantity of water added. The turbulence of the water addition will provide adequate mixing action to prepare the solution.

3.2.6 Application Methods

The stabilizer-sealant solution should be applied to the material to be treated by a pressurized spreader truck or a pressurized spreader bar and an accurate speedometer to ensure uniform distribution of the stabilizer and sealant solution. The Contracting Officer may approve other water spray equipment that can be demonstrated to provide a uniform spray pattern. If the full width spray pattern is not to the Contracting Officer's satisfaction, placement of the treated material into winrows followed by blade-mix processing to provide a homogeneously moisturized mixture may be required.

3.2.7 Soil and Stabilizer-Sealant Solution Blending

The material to be treated and the stabilizer-sealant solution shall be be thoroughly mixed by tractor drawn spike, disc harrows, or cross shaft rotary mixers. At the Contracting officer's option, mixing by motor grader scarification teeth or by blade mix processing may be allowed. Water should not be added to the material prior to adding the stabilizer-sealant solution. Mixing equipment shall follow no more than 1000 feet behind the spray application truck. Stabilizer-sealant solution shall be added in increments and mixing continued to carefully approach the optimum moisture content of the material being stabilized and sealed.

3.2.7.1 Precautions

The stabilizer-sealant solution significantly retards the evaporation and

dry-back of materials during construction, and the solution increases the moisture penetration. This may cause the treated material to appear dry when near the optimum moisture content; exercise caution when adding additional solution. If the entire quantity of stabilizer-sealant solution allotted for the designated volume of material to be treated has been added without achieving a homogeneously wetted mixture within the range of allowable moisture content, then water may be added to the soil-solution blend to bring it within the specified tolerances using the same attention to uniform distribution as was given to to the addition of the stabilizer and sealant solution. It is critical to the stabilization and sealing process that the stabilizer-sealant solution be thoroughly dispersed and blended with the soil material. Multiple mixing passes must be used to blend the material to the satisfaction of the Contracting Officer.

3.2.8 Compaction

3.2.8.1 General

Compaction operations can begin immediately following attainment of proper mixing and moisture content of the treated material. **Compaction equipment shall be capable of compacting the untreated material to a density of not less than 95 percent of the ASTM D 1557, Procedure C, maximum dry density**. Compaction is critical to performance; the highest degree of compaction practically possible shall be utilized.

3.2.8.2 Equipment

Sheepsfoot and pad type rollers can be utilized to compact lower lifts and for initial compaction of the final lifts. Pneumatic-tired rollers, static steel-wheeled rollers, or vibratory steel-wheeled rollers should be used to construct the final compacted surface. Pneumatic-tired rollers in combination with steel-wheeled rollers provide the smoothest and most sealed surfaces.

3.2.8.3 Lift Thickness

Blended materials shall be compacted in uniform layers of not more the 8 inches in loose thickness. The compaction operations shall continue and the treated material shall be maintained within the specified range of moisture content until the specified density has been achieved. All areas of treated materials shall be given a minimum of six complete coverages of roller equipment.

3.2.8.4 Grading

Upon completion, the surface shall be smooth, and in conformity with the typical section, lines, and grades as shown on the Contract Drawings. The average thickness of the compacted, treated material shall not vary more than 1 inch from the thickness specified.

3.2.9 Curing and Return to Service

An EMC SQUARED and EMS treated material will gain noticeable strength and surface hardness during the first several days following final compaction. No surface watering or curing membrane is required during this period. If the surface must be rapidly returned to service under traffic, it should be dried-back adequately so that it is not susceptible to rutting or damage by rapid acceleration and braking. Once the initial stages of stability have been achieved, the treated materials will benefit from the additional

compaction of traffic when placed back in service. A three day minimum curing period is required before placement of pavement surfaces or chip seals. Emulsion surface treatments may be placed immediately upon completion of compaction operations.

3.3 FIELD TESTING CONTROL

Testing shall be the responsibility of the Contractor and shall be performed by a commercial testing laboratory subject to approval and meeting the requirements specified in ASTM D 3740. Testing personnel shall be certified for the requirements outlined in ASTM D 5255. Tests shall be performed in sets of two tests per set with one set being performed at intervals of 2000 square yards or portion thereof. Laboratory testing shall be performed in general compliance with the requirements outlined in ASTM D 4609 except as specified herein. All laboratory strength testing on untreated soil materials shall be performed on the materials compacted to 95 percent of the laboratory maximum dry density with 2 percent of the optimum water content. All laboratory testing on stabilizer-sealant solution treated materials shall be performed on materials compacted to the densities, water contents, and with the stabilizer-sealant solution concentrations specified herein before.

3.3.1 Test Result Submittal

Test results from each set location shall be submitted on a "Test Log" which shall include the following, as applicable: test date, test number, feature of work, station/location, offset, elevation, classification, compaction curve, mold and core sample dimensions, field and laboratory dry densities and dry unit weights, moisture content, stabilizer-sealant concentration, unconfined compressive strengths, and CBR values. Results shall be submitted within 24 hours of test completion.

3.3.2 Test Schedule and Locations

3.3.2.1 Preconstruction Testing

Prior to construction, the Contractor shall perform representative random testing on samples of the material from the subgrade to be tested. Both treated and untreated samples will be tested to determine if significant gains in unconfined shear strength and California Bearing Ratio (CBR) can be obtained. In no case will the unconfined compressive strength be less than 150 psi when compacted to the design percent of laboratory maximum density. If preconstruction tests indicate that significant strength gains are not obtainable or not economical, another method of stabilization, such as lime or cement treatment, will be attempted. Consultation and agreement of the Contracting Officer will be obtained prior to changing stabilization methods.

3.3.2.2 Construction Testing

On set of two tests shall be performed from samples taken at intervals of 2000 square yards or any portion thereof. The Contractor shall submit a map-plan view of the test locations. Test locations and offsets shall be within 10 feet of the locations shown on the map-plan. Individual test samples for each set shall be taken within 3 feet of one another.

3.3.3 Classification and Moisture-Density Relationships

One classification and moisture density relationship shall be performed for

the untreated material of each test set. Classification shall be in accordance with ASTM D 2487. Moisture-density relationships shall be determined by the test method outlined in ASTM D 1557, Procedure C.

3.3.4 Field Density with Moisture Content

Field density and moisture content tests shall be performed for untreated and stabilizer-sealant solution treated materials at each test set location. Field in-place density shall be determined in accordance with ASTM D 1556. Moisture content shall be determined by the test method outlined in ASTM D 2216.

-- End of Section --

SECTION TABLE OF CONTENTS

DIVISION 02 - SITE WORK

SECTION 02711

PORTLAND CEMENT-STABILIZED BASE OR SUBBASE COURSE

PART 1 GENERAL

1.1 DEFINITION
1.2 REFERENCES
1.3 UNIT PRICES
1.4 WAYBILLS AND DELIVERY TICKETS
1.5 SUBMITTALS
1.6 PLANT, EQUIPMENT, MACHINES, AND TOOLS
1.6.1 Straightedge
1.7 WEATHER LIMITATIONS

PART 2 PRODUCTS

2.1 MATERIALS
2.1.1 Cement
2.1.2 Bituminous Material
2.1.3 Material to be Stabilized
2.1.4 Water
2.1.5 Burlap
2.1.6 Impervious Sheeting
2.2 MIX DESIGN
2.2.1 Laboratory Tests for Mix Design
2.2.1.1 General
2.2.1.2 Sieve Analysis and Plasticity Index
2.2.1.3 Moisture-Density Tests
2.2.1.4 Compressive Strength Tests
2.2.1.5 Mix Design Proposal

PART 3 EXECUTION

3.1 GENERAL REQUIREMENTS
3.2 STOCKPILING MATERIALS
3.3 PREPARATION OF AREA TO BE STABILIZED
3.3.1 In-Place Material to be Stabilized
3.3.2 In-Place Materials to Receive Stabilized Course
3.3.3 Select Material
3.4 INSTALLATION
3.4.1 Edges of Stabilized Course
3.4.2 Mixed-in-Place Method
3.4.2.1 Scarifying and Pulverizing of Soil
3.4.2.2 Application of Cement
3.4.2.3 Dry Mixing
3.4.2.4 Water Application and Moist Mixing
3.4.3 Traveling-Plant Method
3.4.4 Layer Thickness
3.4.5 Compaction

3.5 FINISHING
3.6 CONSTRUCTION JOINTS
3.7 CURING AND PROTECTION
3.7.1 Moist Curing
3.7.2 Burlap
3.7.3 Impervious Sheeting
3.7.4 Bituminous Material
3.8 FIELD QUALITY CONTROL
3.8.1 General
3.8.2 Soil
3.8.3 Cement Content Control
3.8.3.1 Spot check
3.8.3.2 Overall check
3.8.4 Preparation for Placing
3.8.5 Placing
3.8.6 In Place Density Tests
3.8.7 Compressive Strengths
3.8.8 Grade Control
3.8.9 Smoothness Test
3.8.10 Thickness Control
3.8.11 Protection
3.8.12 Traffic
3.9 DISPOSAL OF UNSATISFACTORY MATERIALS

-- End of Section Table of Contents --

SECTION 02711

PORTLAND CEMENT-STABILIZED BASE OR SUBBASE COURSE

PART 1 GENERAL

1.1 DEFINITION

Portland cement-stabilized base or subbase course, as used herein, is a mixture of portland cement and in-place, material uniformly blended and thoroughly compacted to produce a pavement course which meets the criteria set forth in the drawings and specifications.

1.2 REFERENCES

The publications listed below form a part of this specification to the extent referenced. The publications are referred to in the text by basic designation only.

AMERICAN ASSOCIATION OF STATE HIGHWAY AND TRANSPORTATION OFFICIALS (AASHTO)

AASHTO M 81	(1992) Cut-Back Asphalt (Rapid-Curing Type)
AASHTO M 82	(1975) Cut-Back Asphalt (Medium-Curing Type)
AASHTO M 147	(1965) Materials for Aggregate and Soil-Aggregate Subbase, Base and Surface Courses
AASHTO M 182	(1991) Burlap Cloth Made from Jute or Kenaf
AASHTO T 134	(1993) Moisture-Density Relations of Soil-Cement Mixtures
AASHTO T 135	(1992) Wetting-and-Drying Test of Compacted Soil-Cement Mixtures
AASHTO T 136	(1992) Freezing-and-Thawing Tests of Compacted Soil-Cement Mixtures

AMERICAN SOCIETY FOR TESTING AND MATERIALS (ASTM)

ASTM C 136	(1996a) Sieve Analysis of Fine and Coarse Aggregates
ASTM C 150	(1996) Portland Cement
ASTM C 171	(1997) Sheet Materials for Curing Concrete
ASTM C 511	(1985) Moist Rooms and Water Storage Tanks Used in Testing Hydraulic Cements and Concrete

ASTM D 75	(1987; R 1992) Sampling Aggregates
ASTM D 558	(1996) Moisture-Density Relations of Soil-Cement Mixtures
ASTM D 977	(1991) Emulsified Asphalt
ASTM D 1556	(1990; R 1996) Density and Unit Weight of Soil in Place by the Sand-Cone Method
ASTM D 1557	(1991) Laboratory Compaction Characteristics of Soil Using Modified Effort (56,000 ft-lbf/cu. ft.(2,700 kN-m/cu. m.))
ASTM D 1632	(1996) Making and Curing Soil-Cement Compression and Flexure Test Specimens in the Laboratory
ASTM D 1633	(1996) Compressive Strength of Molded Soil-Cement Cylinders
ASTM D 2216	(1992) Laboratory Determination of Water (Moisture) Content Of Soil, Rock and Soil-Aggregate Mixtures.
ASTM D 2922	(1996) Density of Soil and Soil-Aggregate in Place by Nuclear Methods (Shallow Depth)
ASTM D 3017	(1988; R 1993) Water Content of Soil and Rock In Place by Nuclear Methods (Shallow Depth)
ASTM D 4318	(1995a) Liquid Limit, Plastic Limit, and Plasticity Index of Soils
ASTM E 11	(1995) Wire-Cloth Sieves for Testing Purposes

1.3 UNIT PRICES

There are no line items in the current Pricing Schedule for this work; Portland Cement Stabilization, constructed and accepted, will be paid for at the negotiated contract unit price per cubic yard of work completed for Portland Cement Stabilized Subbase and Base Courses. No payment will be made for any material wasted, used for the convenience of the Contractor, unused or rejected.

1.4 WAYBILLS AND DELIVERY TICKETS

Copies of waybills or delivery tickets shall be submitted during the progress of the work. Before the final payment is allowed, waybills and certified delivery tickets shall be furnished for all cement, bituminous material and select material used in the construction.

1.5 SUBMITTALS

Government approval is required for submittals with a "GA" designation; submittals having an "FIO" designation are for information only. The following shall be submitted in accordance with Section 01330 SUBMITTAL PROCEDURES:

SD-01 Data

Mix Design; GA.

Proposed mix design, prior to start of stabilization work.

SD-09 Reports

Stabilizing Course; GA.

Certified copies of aggregate test results, not less than 30 days before the material is required in the work. Calibration curves and related test results, prior to using the device or equipment being calibrated.

SD-13 Certificates

Bituminous Material; FIO.

Certified copies of the manufacturer's test reports indicating compliance with applicable specified requirements, not less than 30 days before the material is required in the work.

SD-18 Records

Stabilizing Course; FIO.

Notification of sources from which aggregates are to be obtained, within 15 days after the award of contract.

Source of Bituminous Materials; FIO.

Notification of sources from which bituminous materials are to be obtained, within 15 days after the award of the contract.

Waybills and Delivery Tickets; FIO.

Copies during construction. Copies for all material used, before final payment.

1.6 PLANT, EQUIPMENT, MACHINES, AND TOOLS

Plant, equipment, machines, and tools used in the work shall be subject to approval and shall be maintained in a satisfactory working condition at all times. The equipment shall have the capability of producing the required compaction, meeting grade controls, thickness control and smoothness requirements specified. A test section of at least 8 by 100 feet, utilizing the equipment and procedures proposed for use by the Contractor, shall be placed to demonstrate that soil-cement stabilization conforming to this specification can be produced.

1.6.1 Straightedge

The Contractor shall furnish and maintain at the site, in good condition, one 12 foot straightedge for each bituminous paver, for use in the testing

of the finished surface. Straightedges shall be made available for Government use. Straightedges shall be constructed of aluminum or other lightweight metal and shall have blades of box or box-girder cross section with flat bottom reinforced to insure rigidity and accuracy. Straightedges shall have handles to facilitate movement on pavement.

1.7 WEATHER LIMITATIONS

Cement shall not be applied when the atmospheric temperature is less than 40 degrees F. Cement shall not be applied to soils that are frozen or contain frost, or when the underlying material is frozen. If the temperature falls below 35 degrees F, completed cement-treated areas shall be protected against detrimental effects of freezing. Any areas of completed base or subbase that are damaged by freezing, rainfall, or other weather conditions shall be brought to a satisfactory condition in conformance with this specification without additional cost to the Government.

PART 2 PRODUCTS

2.1 MATERIALS

2.1.1 Cement

Cement shall conform to ASTM C 150, Type I or II. Low alkali cement shall be used for reactive aggregates.

2.1.2 Bituminous Material

Bituminous material for curing coat shall be emulsified asphalt conforming to ASTM D 977, Type RS-1.

2.1.3 Material to be Stabilized

Subbase material shall conform to the material requirements outlined in Section 02721, SUBBASE COURSE, except that milled asphalt concrete or asphalt contaminated materials will not be allowed. Base material to be stabilized shall consist of aggregate base material as specified in Section Section 02722, AGGREGATE BASE COURSE, as applicable. Stones retained on a 2 inch sieve and deleterious substances such as asphalt concrete, sticks, debris, and organic matter shall be removed.

2.1.4 Water

Water shall be clean, fresh, and free from injurious amounts of oil, acid, salt, alkali, organic matter, and other substances deleterious to the hardening of soil-cement, and shall be subject to approval.

2.1.5 Burlap

Burlap shall conform to AASHTO M 182.

2.1.6 Impervious Sheeting

Sheeting shall conform to ASTM C 171 and shall be white waterproof paper, white opaque polyethylene film or white burlap-polyethylene sheets.

2.2 MIX DESIGN

Mix shall be developed using the aggregate or soil-aggregate material to be stabilized. Mix shall have a minimum compressive strength of 250 psi for subbase, 750 psi for base, a weight loss of 14 percent or less after 12 cycles of the durability test, and "low alkali" cement for alkali reactive aggregate.

2.2.1 Laboratory Tests for Mix Design

2.2.1.1 General

All laboratory tests required for design of the soil-cement mix shall be provided by the Contractor. All such tests requiring the addition of water to the soil-cement mixture shall use water from the same approved source that will be used in the field for construction of the soil-cement course. The tests shall be performed by an approved commercial testing laboratory. Copies of the test results shall be furnished to the Contracting Officer within 24 hours of completion of tests. Anticipate 5 to 10 percent cement by weight will be needed to achieve required strength based on the variations in subgrade soil.

2.2.1.2 Sieve Analysis and Plasticity Index

Sieve analysis and the determination of plasticity index shall be performed on a representative sample of soil obtained from the material to be stabilized. Sieve analysis shall be performed in accordance with ASTM C 136 using sieves conforming to ASTM E 11 and shall include a 2-inch sieve. The plasticity index shall be determined in accordance with ASTM D 4318.

2.2.1.3 Moisture-Density Tests

The Contractor shall conduct moisture-density tests in accordance with the procedures contained in ASTM D 558; however, the apparatus (4 inch or 6 inch diameter mold) and the compactive effort (56,000 ft-lbf/cubic foot) shall be as described in ASTM D 1557 to compact the soil-cement mixture.

2.2.1.4 Compressive Strength Tests

Samples for compressive strength tests shall be prepared in accordance with ASTM D 1632. Prepare at least 15 specimens; 5 at three different cement contents by weight of dry soil. The cement contents may be selected using the guidance provided in the Portland Cement Association publication, SOIL-CEMENT LABORATORY HANDBOOK. Prepare the specimens at optimum moisture and maximum density, and measure and record the moisture content, dry density, and wet density. The specimens shall be cured at a constant moisture content and temperature for 7 days in an environment meeting the requirements of ASTM C 511. Unconfined compressive strength tests shall be performed on the prepared soil-cement samples, in accordance with ASTM D 1633, Method B, immediately after the seventh day of curing.

2.2.1.5 Mix Design Proposal

The Contractor shall allow the Contracting Officer seven (7) days following the submittal of the test results to allow the Government time to evaluate the mix design.

PART 3 EXECUTION

3.1 GENERAL REQUIREMENTS

Cement shall not be applied if the soil moisture content exceeds optimum moisture content specified for the cement-treated mixture. After mixing is completed, the proportions of the mixture shall be in accordance with the approved mix design. When application of water and mixing are completed, on the basis of dry weight, moisture shall not be below the optimum moisture content of the mixture nor shall it be more than 2 percent above the optimum moisture content. When the stabilized course is constructed in more than 1 layer, the previously constructed layer shall be cleaned of loose and foreign matter by sweeping with power sweepers or power brooms, except that hand brooms may be used in areas where power cleaning is not practicable. Adequate drainage shall be provided during the entire construction period to prevent water from collecting or standing on the areas to be stabilized or on pulverized, mixed, or partially mixed material. Line and grade stakes shall be provided as necessary for control. Grade stakes shall be placed in lines parallel to the centerline of the area under construction and suitably spaced for string lining.

3.2 STOCKPILING MATERIALS

Select material, including approved material available from excavation and grading shall be stockpiled in the manner and at the locations designated. Before stockpiling of material, the storage sites shall be cleared, drained, and leveled. Materials obtained from different sources shall be stockpiled separately.

3.3 PREPARATION OF AREA TO BE STABILIZED

Area to be stabilized shall be cleaned of debris, and shall be inspected for adequate compaction; and shall be capable of withstanding, without displacement, the compaction specified for the soil-cement mixture. Debris and removed unsatisfactory in-place material shall be disposed of as specified.

3.3.1 In-Place Material to be Stabilized

The entire area to be stabilized shall be graded and shaped to conform to the lines, grades, and cross sections shown in the plans, prior to being processed. Soft or yielding areas shall be made stable before construction is begun.

3.3.2 In-Place Materials to Receive Stabilized Course

Soft, yielding areas and ruts or other irregularities in the surface shall be corrected. Material in the affected areas shall be loosened and unsatisfactory material removed. Approved select material shall be added where directed. The area shall then be shaped to line, grade, and cross section, and shall be compacted to the specified density. Subgrade shall conform to Section 02300 EARTHWORK. Subbase course shall conform to Section 02721 SUBBASE COURSES.

3.3.3 Select Material

Sufficient select material shall be utilized to provide the required thickness of the soil-cement layer after compaction and shall be processed to meet the requirements specified before cement stabilization is undertaken.

3.4 INSTALLATION

3.4.1 Edges of Stabilized Course

Approved material shall be placed along the edges of the stabilized course in such quantity as will compact to the thickness of the course being constructed, or to the thickness of each layer in a multiple-layer course, allowing at least a 1 foot width of the shoulder to be rolled and compacted simultaneously with the rolling and compacting of each layer of the stabilized course.

3.4.2 Mixed-in-Place Method

3.4.2.1 Scarifying and Pulverizing of Soil

Prior to the application of cement, the soil shall be scarified and pulverized to the depth shown. Scarification shall be carefully controlled so that the layer beneath the layer to be stabilized is not disturbed. Depth of pulverizing shall not exceed the depth of scarification. Unless otherwise permitted, the area scarified and pulverized shall not exceed the area that can be completed in 2 working days.

3.4.2.2 Application of Cement

Pulverized material shall be shaped approximately to the cross section indicated. Cement shall be applied so that when uniformly mixed with the soil, the specified cement content is obtained, and a sufficient quantity of cement-treated soil is produced to construct a compacted cement-treated course conforming to the lines, grades, and cross section indicated. Equipment, except that used in spreading and mixing operations, shall not pass over the freshly spread soil cement.

3.4.2.3 Dry Mixing

Immediately after the cement has been distributed, it shall be mixed with the soil. The cement shall not be mixed below the required depth. Mixing shall continue until the cement has been sufficiently blended with the soil to prevent the formation of cement balls when water is applied.

3.4.2.4 Water Application and Moist Mixing

Moisture content of the mixture shall be determined immediately after completion of mixing of the soil and cement. Water-supply and pressure distributing equipment shall be provided that will permit the continuous application within 3 hours of all water required on the section being processed. Water shall be incorporated in the mix so that concentration of water near the surface does not occur. After all the mixing water has been added, mixing shall be continued until the water is uniformly distributed throughout the full depth of the mixture, with no portion of the mixture remaining undisturbed during mixing for more than 30 minutes. Any portion of the mixture remaining undisturbed more than 30 minutes during mixing shall be disposed of as specified. Satisfactory moisture distribution shall occur along the edges of the section.

3.4.3 Traveling-Plant Method

Traveling plant shall move at a uniform rate of speed and shall accomplish thorough mixing of the materials. Water and cement shall be delivered from supply trucks or bins at a predetermined rate. Windrows of prepared

soil-cement mixture shall be of sufficient size to cover a predetermined width to the indicated compacted thickness.

3.4.4 Layer Thickness

Compacted thickness of the stabilized course shall be as indicated. No layer shall be in excess of 8 inches nor less than 4 inches in compacted thickness.

3.4.5 Compaction

Compaction shall commence immediately after mixing is completed. Each layer shall be uniformly compacted to a density of at least 95 percent maximum density, where maximum density is measured in accordance with ASTM D 1557. At the time of compaction the moisture content shall not be less than 1 percentage point below optimum; shall be less than that which will cause the soil-cement to become unstable during compaction and finishing operations; and shall not be more than 2 percentage points above optimum. Rolling shall begin at the outside edge of the surface and proceed to the center, overlapping on successive trips at least one-half the width of the roller. Alternate trips of the roller shall be slightly different lengths. Speed of the roller at all times shall be such that displacement of the mixture does not occur.

The moisture content shall be uniform throughout the layer of material being compacted. At no time shall water be added during compaction operations to the uncompacted soil-cement mixture. If in the opinion of the Contracting Officer, the surface of a layer of soil-cement has been rutted or compacted by hauling equipment to the degree it reduces the effectiveness of compaction by the specified compactors, the Contractor will be required to scarify such surfaces as directed prior to compacting with the specified compactors. No section shall be left undisturbed for longer than thirty minutes during compaction operations. Compaction shall be done in such a manner as to produce a dense surface, free of compaction planes in not longer than one (l) hour from the time water is added to the mixture.

3.5 FINISHING

The surface shall be moistened, if necessary, and shaped to the required lines, grades, and cross section. If necessary, the surface shall be lightly scarified to eliminate any imprints made by the compacting or shaping equipment. The surface shall then be thoroughly compacted to the specified density with rubber-tired rollers and smooth-wheel tandem rollers to the extent necessary to provide a smooth, dense, uniform surface that is free of surface checking, ridges, or loose material, and that conforms to the crown, grade, and line indicated. These finishing operations shall be completed within 2 hours after completion of mixing operations. In places not accessible to finishing and shaping equipment, the mixtures shall be compacted with mechanical tampers to the density specified and shall be shaped and finished by hand methods. Any portion of the compacted mix that has density less than that specified, that has not properly hardened, or that is improperly finished shall be corrected as specified below.

3.6 CONSTRUCTION JOINTS

At the end of each day's construction, a straight transverse construction joint shall be formed by cutting back into the completed work to form a true vertical face free of loose or shattered material. Material along

construction joints not properly compacted shall be removed and replaced with soil-cement that is mixed, moistened, and compacted as specified.

3.7 CURING AND PROTECTION

The finished surface shall be protected against rapid drying for 7 days by one of the methods specified.

3.7.1 Moist Curing

A 2 inch covering of soil or not less than 4 pounds per square yard of straw shall be applied. The material shall be moistened initially and kept moistened throughout the curing period. In multiple-layer construction, the soil used in moist curing, if of approved select material, may be used for constructing the succeeding stabilized course.

3.7.2 Burlap

Burlap covers shall consist of 2 or more layers of burlap having a combined weight of 14 ounces or more per square yard in a dry condition. Burlap shall be either new or shall have been used only for curing concrete. Burlap strips shall have a length, after shrinkage, at least 1 foot greater than necessary to cover the entire width and edges of the finished stabilized area. Mats shall overlap each other at least 6 inches. Mats shall be thoroughly wetted before placing and shall be kept continuously wet and in contact with the surface and edges of the finished stabilized area for the entire curing period.

3.7.3 Impervious Sheeting

The surface of the finished stabilized area shall be moistened with a fine spray of water and then covered with impervious sheeting. The burlap of the polyethylene-coated burlap shall be thoroughly saturated with water before placing. Sheeting shall be placed with the light-colored side up. Sheets shall extend over the edges of the stabilized area and shall be held securely in place throughout the curing period. Edges of sheets shall overlap each other at least 12 inches and shall be securely cemented or taped to form continuous closed joints. Tears and holes in sheets shall be repaired immediately.

3.7.4 Bituminous Material

Bituminous material shall be uniformly applied by means of a bituminous distributor within a temperature range of 130 to 185 degrees F, as directed. Bituminous material for curing shall be uniformly applied at the rate of 0.2 to 0.25 gallon per square yard. Areas inaccessible to or missed by the distributor shall be properly treated using the manually operated hose attachment. Bituminous material shall be applied only to the top layer. At the time the bituminous material is applied, the surface shall be free of loose or foreign matter and shall contain sufficient moisture to prevent excessive penetration of the bituminous material. When necessary, water in sufficient quantity to fill the surface voids shall be applied immediately before the bituminous material is applied. Treated surface shall be sanded or dusted to prevent the bituminous material from being picked up by traffic.

3.8 FIELD QUALITY CONTROL

3.8.1 General

Field tests shall be performed in sufficient numbers to assure that the specifications are being met. Quality control testing shall be the responsibility of the Contractor. The following number of tests, performed at the appropriate time, will be the minimum acceptable for each type of operation.

3.8.2 Soil

At least once during each shift, there shall be a gradation analysis, a moisture content, and a set of Atterberg limits performed in accordance with ASTM C 136, ASTM D 2216, and ASTM D 4318, respectively, on the material being stabilized. The location at which samples are taken may be selected by the Contractor as the most advantageous for control.

3.8.3 Cement Content Control

The quantity of bulk cement that is spread shall be checked in two ways; spot checks and overall checks.

3.8.3.1 Spot check

To spot check, a sheet of canvas, usually 1 square yard in area, is placed ahead of the cement spreader. After the spreader has passed, the canvas and cement is weighed. The spreader is then adjusted if necessary and the procedure repeated until the correct spread per square yard is obtained.

3.8.3.2 Overall check

The overall check is made by measuring the area over which a truckload of cement of known weight is spread. This actual area is then compared with the theoretical area, which the known quantity of cement should have covered. The spreader is first adjusted at the start of construction after checking the cement spread per square yard with the canvas. Then slight adjustments are made after checking the distance over which each truckload is spread. A continuous check on cement spreading operations shall be kept.

3.8.4 Preparation for Placing

The subgrade and the construction joints shall be inspected in sufficient time prior to each soil-cement placement by the Contractor in order to certify to the Contracting Officer that it is ready to receive soil-cement.

3.8.5 Placing

The placing foreman shall supervise all placing operations and shall be responsible for measuring and recording ambient temperature, weather conditions, time of placement, yardage placed, and method of placement.

3.8.6 In Place Density Tests

One density test conforming to ASTM D 1556 or ASTM D 2922 shall be performed for each 280-foot length of an 8-foot wide paving lane, which is equivalent to one test per 250 square yards of soil cement constructed. Tests shall be performed immediately after rolling. Test ASTM D 2922 results in a wet unit weight of soil, and when using this method, ASTM D 3017 shall be used to determine the moisture content of the soil. Calibration curves furnished along with the density gauge shall be checked as described in ASTM D 3017. Calibration checks of the density gauge shall

be made at the beginning of a job on each type of material encountered. If ASTM D 2922 is used, in-place densities shall be checked by ASTM D 1556 at least once for each nuclear test until correlation is established between the two test methods. Following adequate correlation, ASTM D 1556 shall be used to check nuclear tests at a frequency of one per every 5 nuclear tests. Calibration curves and calibration test results shall be furnished within 24 hours of conclusion of the tests. The locations of tests shall be randomly distributed throughout the soil-cement which has been placed. The Contracting Officer shall be immediately notified of all density test results. A complete written report of test results shall be supplied to the Contracting Officer within 24 hours of sampling.

3.8.7 Compressive Strengths

At least one compressive strength test (two cylinders each) shall be conducted for each 250 cubic yards of soil-cement placed, and no less than two tests per shift. Tests shall determine the seven (7) day compressive strength in accordance with ASTM D 1633, Method B.

3.8.8 Grade Control

Underlying material shall be excavated to sufficient depth for the required stabilized-course thickness so that the finished stabilized course with the subsequent surface course will meet the fixed grade. Finished and completed stabilized area shall conform to the lines, grades, cross section, and dimensions indicated.

3.8.9 Smoothness Test

The surface of a stabilized layer shall show no deviations in excess of 3/8 inch when tested with the 12-foot straightedge. Deviations exceeding this amount shall be corrected by removing material and replacing new material, or by reworking existing material and compacting, as directed. Measurements for deviation from grade and cross section shown shall be taken in successive positions parallel to the road centerline with a 12-foot straightedge. Measurements shall also be taken perpendicular to the area centerline at 50-foot intervals.

3.8.10 Thickness Control

The completed thickness of the stabilized course shall be within 1/2 inch of the thickness indicated. Where the measured thickness is more than 1/2 inch deficient, such areas shall be corrected by scarifying, adding mixture of proper gradation, reblading, and recompacting as directed. Where the measured thickness is more than 1/2 inch thicker than indicated, the course shall be considered as conforming with the specified thickness requirements. Average job thickness shall be the average of all thickness measurements taken for the job, but shall be within 1/4 inch of the thickness indicated. The thickness of the stabilized course shall be measured at intervals in such a manner as to ensure one measurement for each 100 square yards of stabilized course. Measurements shall be made by taking differential elevations between the subgrade and top of the stabilized course at preselected locations.

3.8.11 Protection

At least once each shift, an inspection shall be made of all areas subject to protection from adverse weather or flows. Deficiencies shall be corrected.

3.8.12 Traffic

Completed portions of the cement-treated soil area may be opened immediately to light traffic provided the curing is not impaired. After the curing period has elapsed, completed areas may be opened to all traffic provided that the cement-stabilized course has hardened sufficiently to prevent marring or distorting of the surface by equipment or traffic. Heavy equipment shall not be permitted on the area during the curing period. Cement and water may be hauled over the area with pneumatic-tired equipment as approved. Finished portions of cement-stabilized soil that are traveled on by equipment used in constructing an adjoining section shall be protected in a manner so as to prevent equipment from marring or damaging the completed work.

3.9 DISPOSAL OF UNSATISFACTORY MATERIALS

Removed in-place materials that are unsuitable for stabilization, material that is removed for the required correction of defective areas, waste material, and debris shall be disposed of off of Government-controlled land at the completion of construction.

-- End of Section --

SECTION TABLE OF CONTENTS

DIVISION 02 - SITE WORK

SECTION 02712

LIME-STABILIZED SUBGRADE

PART 1 GENERAL

1.1 REFERENCES
1.2 MEASUREMENT FOR PAYMENT
1.2.1 Lime Stabilization
1.2.2 Lime
1.2.3 Bituminous Material
1.3 WAYBILLS AND DELIVERY TICKETS
1.4 BASIS FOR PAYMENT
1.5 DEFINITIONS
1.5.1 Lime-Stabilized Subgrade
1.5.2 Degree of Compaction
1.6 JOB DESCRIPTION
1.7 SUBMITTALS
1.8 STOCKPILING MATERIALS
1.9 PLANT, EQUIPMENT, MACHINES, AND TOOLS
1.9.1 General Requisites
1.9.2 Steel-Wheeled Rollers
1.9.3 Pneumatic-Tired Rollers
1.9.4 Mechanical Spreader
1.9.5 Sprinkling Equipment
1.9.6 Tampers
1.9.7 Straightedge
1.10 WEATHER LIMITATIONS

PART 2 PRODUCTS

2.1 MATERIALS
2.1.1 Lime
2.1.2 Bituminous Material
2.1.2.1 Emulsified Asphalt
2.1.3 Material to be Stabilized
2.1.4 Water
2.2 MIX DESIGN

PART 3 EXECUTION

3.1 LIME STABILIZATION MIXTURE
3.2 PREPARATION OF AREA TO BE STABILIZED
3.2.1 In-Place Material to be Stabilized
3.2.2 Grade Control
3.3 INSTALLATION
3.3.1 Mixed In-Place Method
3.3.1.1 Scarifying and Pulverizing of Soil
3.3.1.2 Application of Lime
3.3.1.3 Initial Mixing

3.3.1.4 Water Application and Moist Mixing
3.3.2 Edges of Stabilized Course
3.3.3 Central-Plant Method
3.3.4 Traveling-Plant Method
3.3.5 Layer Thickness
3.3.6 Compaction
3.3.7 Finishing
3.3.8 Construction Joints
3.3.9 Curing and Protection
3.3.9.1 Moist Curing
3.3.9.2 Bituminous Material
3.4 SAMPLING AND TESTING
3.4.1 General Requirements
3.4.2 Results
3.4.3 Sampling
3.4.4 Sieve Analysis
3.4.5 Liquid Limit and Plasticity Index
3.4.6 Chemical Analysis
3.4.7 Testing
3.5 FIELD QUALITY CONTROL
3.5.1 Thickness Control
3.5.2 Field Density
3.5.3 Smoothness Test
3.6 TRAFFIC
3.7 MAINTENANCE
3.8 DISPOSAL OF UNSATISFACTORY MATERIALS

-- End of Section Table of Contents --

SECTION 02712

LIME-STABILIZED SUBGRADE

PART 1 GENERAL

1.1 REFERENCES

The publications listed below form a part of this specification to the extent referenced. The publications are referred to in the text by basic designation only.

AMERICAN SOCIETY FOR TESTING AND MATERIALS (ASTM)

ASTM C 25	(1996a) Chemical Analysis of Limestone, Quicklime, and Hydrated Lime
ASTM C 50	(1994) Sampling, Inspection, Packing, and Marking of Lime and Limestone Products
ASTM C 136	(1996a) Sieve Analysis of Fine and Coarse Aggregates
ASTM D 75	(1987; R 1992) Sampling Aggregates
ASTM D 559	(1996) Wetting and Drying Compacted Soil-Cement Mixtures
ASTM D 977	(1991) Emulsified Asphalt
ASTM D 1140	(1992) Amount of Material in Soils Finer than the No. 200 (75-micrometer) Sieve
ASTM D 1250	(1980; R 1990) Petroleum Measurement Tables
ASTM D 1556	(1990; R 1996) Density and Unit Weight of Soil in Place by the Sand-Cone Method
ASTM D 1557	(1991) Laboratory Compaction Characteristics of Soil Using Modified Effort (56,000 ft-lbf/cu. ft. (2,700 kN-m/cu.m.))
ASTM D 1632	(1996) Making and Curing Soil-Cement Compression and Flexure Test Specimens in the Laboratory
ASTM D 1633	(1996) Compressive Strength of Molded Soil-Cement Cylinders
ASTM D 2027	(1976; R 1992) Cutback Asphalt (Medium-Curing Type)
ASTM D 2922	(1996) Density of Soil and Soil-Aggregate

	in Place by Nuclear Methods (Shallow Depth)
ASTM D 3017	(1988; R 1993) Water Content of Soil and Rock in Place By Nuclear Methods (Shallow Depth)
ASTM D 3740	(1996) Minimum Requirements for Agencies Engaged in the Testing and/or Inspection of Soil and Rock as Used in Engineering Design and Construction
ASTM D 4318	(1995a) Liquid Limit, Plastic Limit, and Plasticity Index of Soils
ASTM D 5255	(1992)Certification of Personnel Engaged in the Testing of Soil and Rock
ASTM E 329	(1990) Evaluation of Testing and Inspection Agencies as Used in Construction
ASTM E 11	(1995) Wire-Cloth Sieves for Testing Purposes

1.2 MEASUREMENT FOR PAYMENT

1.2.1 Lime Stabilization

Measurement will be by the cubic yard of work completed and accepted.

1.2.2 Lime

Measurement will be by the number of 2000 pound tons of lime used in the completed and accepted work. No measurement will be made for wasted lime or lime used in work determined defective. No additional compensation shall be forthcoming for lime used in excess of the approved mix design concentration.

1.2.3 Bituminous Material

Bituminous material to be paid for will be measured in the number of 2000 pound tons of the material used in the accepted work; no additional compensation shall be forthcoming for material used in excess of the application quantities specified herein.

1.3 WAYBILLS AND DELIVERY TICKETS

Copies of waybills or delivery tickets shall be submitted during the progress of the work. Before the final payment is allowed waybills and certified delivery tickets shall be furnished for all lime and bituminous materials used in the construction.

1.4 BASIS FOR PAYMENT

There are no line items in the current Pricing Schedule for this work; Lime stabilization, constructed and accepted, including lime and bituminous material will be paid for at the negotiated contract unit prices in the bidding schedule. No payment will be made for any material wasted, used for the convenience of the Contractor, unused or rejected, or for water used. No separate payment will be made for sanding or dusting the

bituminous prime-coated surfaces, and all costs for sanding or dusting shall be included in the contract unit price for bituminous material.

1.5 DEFINITIONS

1.5.1 Lime-Stabilized Subgrade

Lime-stabilized subgrade, as used in this specification, is a mixture of lime and in-place uniformly blended, wetted, and thoroughly compacted subgrade soils that will produce a subgrade which meets the criteria set forth in the plans and this specification.

1.5.2 Degree of Compaction

Degree of compaction required is expressed as a percentage of the maximum density obtained by the test procedure presented in ASTM D 1557 Procedure C, abbreviated as percent laboratory maximum dry density.

1.6 JOB DESCRIPTION

The work specified consists of the construction of a lime-stabilized subgrade. The work shall be performed in accordance with this specification and shall conform to the lines, grades, notes, and typical sections shown in the drawings. Sources of materials shall be selected well in advance of the time when materials will be required in the work.

1.7 SUBMITTALS

Government approval is required for submittals with a "GA" designation; submittals having an "FIO" designation are for information only. The following shall be submitted in accordance with Section 01330 SUBMITTAL PROCEDURES:

SD-01 Data

Plant, Equipment, Machines, and Tools; GA. Mix Design; GA.

List of proposed equipment to be used in performance of construction work including descriptive data. Mix design at least 30 days before it is to be used.

SD-09 Reports

Sampling and Testing; GA. Field Density; GA.

Calibration curves and related test results prior to using the device or equipment being calibrated. Copies of field test results within 24 hours after the tests are performed. Certified copies of test results of materials and sources not less than 30 days before material is to be delivered to the site.

SD-13 Certificates

Testing; FIO.

Qualifications of the commercial testing laboratory or Contractor's testing facilities in accordance with ASTM D 3740 and ASTM E 329. Qualifications of testing personnel in accordance with ASTM D 5255.

SD-18 Records

Waybills and Delivery Tickets; FIO.

Copies of waybills and delivery tickets during the progress of the work. Certified waybills and delivery tickets for all materials actually used.

1.8 STOCKPILING MATERIALS

Excavated material, lime, and other approved materials shall be stockpiled in the manner and at the locations designated. Before stockpiling material, storage sites shall be cleared and sloped to drain. Materials obtained from different sources shall be stockpiled separately.

1.9 PLANT, EQUIPMENT, MACHINES, AND TOOLS

1.9.1 General Requisites

Plant, equipment, machines, and tools used in the work shall be subject to approval and shall be maintained in satisfactory working condition at all times. Other compacting equipment may be used in lieu of that specified, where it can be demonstrated that the results are equivalent. Protective equipment, apparel, and barriers shall be provided to protect the eyes, respiratory system, and the skin of workers exposed to contact with lime dust or slurry.

1.9.2 Steel-Wheeled Rollers

Steel-wheeled rollers shall be the self-propelled type weighing not less than 20,000 pounds, with a minimum weight of 300 pounds/inch width of rear wheel. Wheels of the rollers shall be equipped with adjustable scrapers. The use of vibratory rollers is optional.

1.9.3 Pneumatic-Tired Rollers

Pneumatic-tired rollers shall be loaded to weigh a minimum of 25,000 pounds and have four or more tires. Tires shall be inflated to a minimum pressure of 60 psi. The loading shall be equally distributed to all wheels, and the tires shall be uniformly inflated. Towing equipment shall also be pneumatic-tired.

1.9.4 Mechanical Spreader

Mechanical spreader shall be self-propelled or attached to a propelling unit capable of moving the spreader and material truck. The device shall be steerable and shall have variable speeds forward and reverse. The spreader and propelling unit shall be carried on tracks, rubber tires, or drum-type steel rollers that will not disturb the underlying material. The spreader shall contain a hopper, an adjustable screed, and outboard bumper rolls; and shall be designed to have a uniform, steady flow of material from the hopper. The spreader shall be capable of laying material without segregation across the full width of the lane to a uniform thickness and to a uniform loose density so that when compacted, the layer or layers shall conform to thickness and grade requirements indicated. The Contracting Officer may require a demonstration of the spreader prior to approving use in performance of the work.

1.9.5 Sprinkling Equipment

Sprinkling equipment shall consist of tank trucks, pressure distributors, or other approved equipment designed to apply controlled quantities of water uniformly over variable widths of surface.

1.9.6 Tampers

Tampers shall be of an approved mechanical type, operated by either pneumatic pressure or internal combustion, and shall have sufficient weight and striking power to produce the compaction required.

1.9.7 Straightedge

The Contractor shall furnish and maintain at the site, in good condition, one 12-foot straightedge, for use in the testing of the finished surface. Straightedge shall be made available for Government use. Straightedges shall be constructed of aluminum or other lightweight metal and shall have blades of box or box-girder cross section with flat bottom reinforced to insure rigidity and accuracy. Straightedges shall have handles to facilitate movement on pavement.

1.10 WEATHER LIMITATIONS

Work on the subgrade shall not be performed during freezing temperatures. Any areas of stabilized subgrade that are damaged by freezing, rainfall, or other weather conditions shall be brought to a satisfactory condition without additional cost to the Government. Lime shall not be applied when the atmospheric temperature is less than 40 degrees F. No lime shall be applied to soils that are frozen or contain frost, or when the underlying material is frozen. If the temperature falls below 35 degrees F, the completed lime-treated areas shall be protected against any detrimental effects of freezing.

PART 2 PRODUCTS

2.1 MATERIALS

2.1.1 Lime

Lime shall be a standard brand of quicklime or hydrated lime conforming to the following physical and chemical requirements:

a. Lime shall be of such gradation that 99-1/2 percent passes a No. 20 sieve and a minimum of 85 percent passes a No. 100 sieve.

b. Combined calcium oxide and magnesium oxide shall be not less than 92 percent.

2.1.2 Bituminous Material

Material shall conform to one of the following:

2.1.2.1 Emulsified Asphalt

ASTM D 977, Type SS-1.

2.1.3 Material to be Stabilized

Material to be stabilized shall consist of in-place material in the area or

approved imported clayey materials. Material shall be free of deleterious substances such as sticks, debris, organic matter, and stones greater than 2 inches in any dimension. At least 30 percent of the material shall pass the No. 40 sieve. Plasticity index shall be greater than 12.

2.1.4 Water

Water shall be clean and free from oil, acid, salt, alkali, organic matter, and other substances deleterious to the lime or soil-lime mixture. Water source shall be subject to approval.

2.2 MIX DESIGN

The Contractor shall develop and submit for approval a proposed mix design prior to stabilization work. Mix shall be developed using samples of the material to be stabilized. Mix design shall be capable of producing a minimum compressive strength of 150 psi when compacted to the design percent of laboratory maximum density. Samples shall not show any significant loss of strength after 12 cycles of the durability test.

PART 3 EXECUTION

3.1 LIME STABILIZATION MIXTURE

The material to be stabilized shall be thoroughly pulverized and, when lime is applied in the dry state, the mix shall be thoroughly blended at a moisture content below optimum. After mixing is completed, the proportions of the mixture shall be in accordance with the approved mix design. After blending, water shall be blended into the dry mix in amounts necessary to bring the moisture content to optimum. Field moisture content shall be controlled within plus or minus 2 percent of optimum. When the stabilized course is constructed in more than one layer, the previously constructed layer shall be cleaned of loose and foreign matter by sweeping with power sweeper or power brooms except that hand brooms may be used in areas where power cleaning is not practicable. Adequate drainage shall be provided during the entire construction period to prevent water from collecting or standing on the area to be stabilized or on pulverized, mixed, or partially mixed material. Line and grade stakes shall be provided as necessary for control. Grade stakes shall be in lines parallel to the centerline of the area under construction and suitably spaced for string lining.

3.2 PREPARATION OF AREA TO BE STABILIZED

The area shall be cleaned of debris. The area will be inspected for adequate compaction and shall be capable of withstanding, without displacement, the compaction specified for the soil-lime mixture. Debris and removed unsatisfactory in-place material shall be disposed of as specified.

3.2.1 In-Place Material to be Stabilized

The entire area shall be graded to conform to the lines, grades, and cross sections shown in the plans prior to being processed. Soft or yielding subgrade areas shall be made stabilized before construction is begun.

3.2.2 Grade Control

Underlying material shall be excavated to sufficient depth for the required stabilized-course thickness so that the finished stabilized course with the

subsequent surface course will meet the fixed grade. Finished and completed stabilized area shall conform to the lines, grades, cross section, and dimensions indicated.

3.3 INSTALLATION

3.3.1 Mixed In-Place Method

3.3.1.1 Scarifying and Pulverizing of Soil

Prior to application of lime, the soil shall be scarified and pulverized to the depth shown. Depth of pulverizing shall not exceed the depth of scarification.

3.3.1.2 Application of Lime

Pulverized material shall be shaped to approximately the cross section indicated. Lime shall be applied so that when uniformly mixed with the soil, the specified lime content is obtained, and a sufficient quantity of lime-treated soil is produced to construct a compacted lime-treated course conforming to the lines, grades, and cross section indicated. Mechanical spreaders shall be used in applying bulk lime. Distributors shall be used in applying lime slurries. If lime is spread by hand, the bags shall be spotted accurately on the area being stabilized so that when the bags are opened the lime will be dumped and spread uniformly on the area being processed. No equipment except that used in spreading and mixing shall pass over the freshly applied lime.

3.3.1.3 Initial Mixing

Immediately after the lime has been distributed, the lime and soil shall be mixed. Initial mixing shall be sufficient to alleviate any dusting or wetting of the lime that might occur in the event of wind or rainstorms. This may be accomplished several days in advance of the final application and mixing.

3.3.1.4 Water Application and Moist Mixing

Moisture content of the mixture shall be determined in preparation for final mixing. Moisture in the mixture following final mixing shall not be less than the water content determined to be optimum based on dry weight of soil and shall not exceed the optimum water content by more than 2 percentage points. Water may be added in increments as large as the equipment will permit; however, such increment of water shall be partially incorporated in the mix to avoid concentration of water near the surface. After the last increment of water has been added, mixing shall be continued until the water is uniformly distributed throughout the full depth of the mixture, including satisfactory moisture distribution along the edges of the section.

3.3.2 Edges of Stabilized Course

Approved material shall be placed along the edges of the stabilized course in a quantity that will compact to the thickness of the course being constructed, or to the thickness of each layer in a multiple-layer course, allowing at least a 1 foot width of the shoulder to be rolled and compacted simultaneously with the rolling and compacting of each layer of the stabilized course.

3.3.3 Central-Plant Method

Plant shall be capable of producing a uniform lime-treated mixture at the specified lime and moisture contents. Mixture shall be hauled to the job in trucks equipped with protective covers. Underlying course shall be thoroughly moistened and the mixture then placed on the prepared area in a uniform layer with mechanical spreaders. The layer shall be uniform in thickness and surface contour; and the completed layer, after compaction, shall conform to the required grade and cross section.

3.3.4 Traveling-Plant Method

Traveling plant shall move at a uniform rate of speed and shall accomplish thorough mixing of the materials in one pass. Water and lime shall be delivered from supply trucks or bins at a predetermined rate. Windrows of prepared soil-lime mixture shall cover a predetermined width to the indicated compacted thickness.

3.3.5 Layer Thickness

Compacted thickness of the stabilized course shall be as indicated. No layer shall be more than 8 inches or less than 3 inches in compacted thickness.

3.3.6 Compaction

Before compaction operations are started and as a continuation of the mixing operation, the mixture shall be thoroughly loosened and pulverized to the full depth. Compaction shall be started immediately after mixing is completed. During final compaction, the surface shall be moistened, if necessary, and shaped to the required lines, grades, and cross section. Density of compacted mixture shall be at least 95 percent of laboratory maximum dry density. Rolling shall begin at the outside edge of the surface and proceed to the center, overlapping on successive trips at least one-half the width of the roller. Alternate trips of the roller shall be slightly different lengths. At all times, the speed of the roller shall not cause displacement of the mixture to occur. Areas inaccessible to the rollers shall be compacted with mechanical tampers, and shall be shaped and finished by hand methods.

3.3.7 Finishing

The surface of the top layer shall be finished to the grade and cross section shown. The surface shall be of uniform texture. Light blading during rolling may be necessary for the finished surface to conform to the lines, grades, and cross sections. If the surface for any reason becomes rough, corrugated, uneven in texture, or traffic-marked prior to completion, the unsatisfactory portions shall be scarified, reworked, relaid, or replaced as directed. If any portion of the course, when laid, becomes watersoaked for any reason, that portion shall be removed immediately, and the mix placed in a windrow and aerated until a moisture content within the limits specified is obtained; and then spread, shaped, and rolled as specified above.

3.3.8 Construction Joints

At the end of each phase of construction, a straight transverse construction joint shall be formed by cutting back into the completed work to form a true vertical face free of loose or shattered material. Material

along construction joints not properly compacted shall be removed and replaced with soil-lime mixture that is mixed, moistened, and compacted as specified.

3.3.9 Curing and Protection

Immediately after the soil-lime area has been finished as specified above, the surface shall be protected against rapid drying for 7 days by one of the methods specified below.

3.3.9.1 Moist Curing

The area shall be moistened by sprinkling and shall be kept moist for the 7-day curing period.

3.3.9.2 Bituminous Material

Bituminous material shall be uniformly applied by means of a bituminous distributor within a temperature range of 70 to 160 degrees F. Bituminous material shall be applied in quantities of not less than 0.1 gallon per square yard nor more than 0.25 gallon per square yard. The final application rate shall be determined bases on curing and absorption after field application. Areas inaccessible to or missed by the distributor shall be properly treated using the manually operated hose attachment. Bituminous material shall be applied only to the top layer. At the time the bituminous material is applied, the surface of the area shall be free of loose or foreign matter and shall contain sufficient moisture to prevent excessive penetration of the bituminous material. When necessary, the area shall be sprinkled immediately before the bituminous material is applied. Treated surface shall be sanded to prevent the bituminous material from being picked up by traffic.

3.4 SAMPLING AND TESTING

3.4.1 General Requirements

Sampling and testing shall be performed by an approved commercial testing laboratory or by facilities furnished by the Contractor. Testing facilities shall meet the requirements outlined in ASTM D 3740 and ASTM E 329. Testing personnel shall shall meet the requirements of ASTM D 5255. Work requiring testing will not be permitted until the facilities have been inspected and approved. The first inspection will be at the expense of the Government. Cost incurred for any subsequent inspection required because of failure of the facilities to pass the first inspection will be charged to the Contractor. Tests shall be performed in sufficient numbers and at the locations and times directed to ensure that materials and compaction meet specified requirements. Certified copies of the test results shall be furnished to the Contracting Officer.

3.4.2 Results

Results shall verify that materials comply with the specification. When deficiencies are found, the initial analysis shall be repeated and the material already placed shall be retested to determine the extent of unacceptable material. All in-place unacceptable material shall be replaced at no additional cost to the Government.

3.4.3 Sampling

All aggregate samples for laboratory testing shall be taken in accordance with ASTM D 75. Samples of lime shall be taken in accordance with ASTM C 50. Specimens for the unconfined compression tests shall be prepared in accordance with ASTM D 1632.

3.4.4 Sieve Analysis

Before starting work, one sample of the material to be stabilized shall be tested in accordance with ASTM C 136 and ASTM D 1140 on sieves conforming to ASTM E 11. After the initial test, a minimum of two analysis shall be performed for each 1000 square yards of material placed, with a minimum of three analyses for each day's run until subgrade stabilization is completed.

3.4.5 Liquid Limit and Plasticity Index

One liquid limit and plasticity index shall be performed for each sieve analysis. Liquid limit and plasticity index shall be in accordance with ASTM D 4318.

3.4.6 Chemical Analysis

Lime shall be tested for the specified chemical requirements in accordance with ASTM C 25. Three tests shall be conducted for each delivery of lime.

3.4.7 Testing

Unconfined compression tests shall be conducted in accordance with ASTM D 1633. Three tests shall be conducted for each mix design tested. Samples shall be cured at a constant moisture content and temperature for 28 days. Wet-dry tests shall be conducted in accordance with ASTM D 559. Three tests shall be conducted for each mix design tested. Scratch portion of the test shall be omitted.

3.5 FIELD QUALITY CONTROL

Tests shall provide a moisture-density relationship for the lime-soil mixture. Results of field quality control testing shall verify that materials comply with this specification. When a material source is changed, the new material shall be tested for compliance. When deficiencies are found, the initial analysis shall be repeated and the material already placed shall be retested to determine the extent of unacceptable material. All in-place unacceptable material shall be replaced or repaired, as directed by the Contracting Officer, at no additional cost to the Government.

3.5.1 Thickness Control

Thickness of the stabilized course shall be determined by penetrating the stabilized course with 3-inch drilled cores at the interval specified. Core holes will be filled with lime treated subgrade material after removal is complete. Completed thicknesses of the stabilized course shall be within 1/2 inch of the thickness indicated. Where the measured thickness of the stabilized course is more than 1/2 inch deficient, such areas shall be corrected by scarifying, adding mixture of proper gradation, reblading, and recompacting as directed. Where the measured thickness of the stabilized course is more than (1/2 inch thicker than indicated, it shall be considered as conforming to the specified thickness requirement. Average job thickness shall be the average of all thickness measurements taken for the job, but shall be within 1/4 inch of the thickness indicated. No

additional compensation shall be forthcoming for average job thicknesses in excess of 1/4 inch of the thickness indicated. Thickness of the stabilized course shall be measured at intervals which ensure one measurement for each 500 square yards of stabilized course. Isolated patch areas shall be individually tested with one core at each location.

3.5.2 Field Density

Field in-place density shall be determined in accordance with ASTM D 1556 and ASTM D 2922. When ASTM D 2922 is used, the calibration curves shall be checked, and adjusted if necessary, using the sand cone method as described in paragraph Calibration of the ASTM publication. When ASTM D 2922 is used, the Contractor shall obtain all necessary permits and authorizations for the use of the nuclear gage. ASTM D 2922 results in a wet unit weight of soil and when using this method, ASTM D 3017 shall be used to determine the moisture content of the soil. The calibration curves furnished with the moisture gauges shall be checked along with density calibration checks as described in ASTM D 3017. If ASTM D 2922 is used, in-place densities shall be checked by ASTM D 1556 at least once per lift for each set of five nuclear density tests. Calibration curves and calibration tests results shall be furnished to the Contracting Officer within 24 hours of conclusion of the tests. At least one field density test shall be performed for each 250 square yards of each layer of stabilized subgrade material. Isolated patch areas shall be tested with one test at each location.

3.5.3 Smoothness Test

The surface of a stabilized layer shall show no deviations in excess of 3/8 inch when tested with the 12-foot straightedge. Deviations exceeding this amount shall be corrected by removing material and replacing with new material, or by reworking existing material and compacting, as directed. Measurements for deviation from grade and cross section shown shall be taken at the edges and centerlines of the stabilized areas in successive positions in the longitudinal and transverse directions at 50-foot intervals.

3.6 TRAFFIC

Completed portions of the lime-treated soil area may be opened immediately to light traffic provided the curing is not impaired. After the curing period has elapsed, completed areas may be opened to all traffic, provided the stabilized course has hardened sufficiently to prevent marring or distorting of the surface by equipment or traffic. Heavy equipment shall not be permitted on the area during the curing period. Lime and water may be hauled over the completed area with pneumatic-tired equipment if approved. Finished portions of lime-stabilized soil that are traveled on by equipment used in constructing an adjoining section shall be protected in a manner to prevent equipment from marring or damaging completed work.

3.7 MAINTENANCE

Stabilized area shall be maintained in a satisfactory condition until the completed work is accepted. Maintenance shall include immediate repairs of any defects and shall be repeated as often as necessary to keep the area intact. Defects shall be corrected as specified herein.

3.8 DISPOSAL OF UNSATISFACTORY MATERIALS

Removed in-place materials that are unsuitable for stabilization, material

that is removed for the required correction of defective areas, waste material, and debris shall be disposed of off of Government-controlled land unless otherwise authorized. Disposal shall be in conformance with local environmental regulations.

-- End of Section --

SECTION TABLE OF CONTENTS

DIVISION 02 - SITE WORK

SECTION 02715

CHEMICALLY-STABILIZED AND SEALED SUBGRADE

PART 1 GENERAL

1.1 SCOPE OF WORK
1.2 REFERENCES
1.3 UNIT PRICES
1.3.1 Measurement and Payment
1.3.2 Quality Control
1.4 DEFINITIONS
1.4.1 Stabilization and Sealing
1.4.2 Degree of Compaction
1.4.3 Water Content
1.4.4 Emulsion and Product
1.4.5 Stabilizer-Sealant Solution
1.5 SUBMITTALS

PART 2 PRODUCTS

2.1 STABILIZERS AND SEALANTS
2.1.1 Concentrated Liquid Stabilizer
2.1.1.1 Application Requirements
2.1.1.2 Protection
2.1.2 Earth Materials Sealant
2.1.2.1 Application Requirements

PART 3 EXECUTION

3.1 PREPARATION OF SURFACE
3.2 APPLICATION OF STABILIZER-SEALANT SOLUTION
3.2.1 General
3.2.2 Atmospheric Temperature
3.2.3 Weather Conditions
3.2.4 Application Rate
3.2.5 Quantity of Water Required
3.2.5.1 General
3.2.5.2 Arid and Semi-Arid Regions
3.2.5.3 Other Conditions
3.2.5.4 Stabilizer-Sealant-Water Mixing
3.2.6 Application Methods
3.2.7 Soil and Stabilizer-Sealant Solution Blending
3.2.7.1 Precautions
3.2.8 Compaction
3.2.8.1 General
3.2.8.2 Equipment
3.2.8.3 Lift Thickness
3.2.8.4 Grading
3.2.9 Curing and Return to Service

3.3 FIELD TESTING CONTROL
3.3.1 Test Result Submittal
3.3.2 Test Schedule and Locations
3.3.2.1 Preconstruction Testing
3.3.2.2 Construction Testing
3.3.3 Classification and Moisture-Density Relationships
3.3.4 Field Density with Moisture Content

-- End of Section Table of Contents --

SECTION 02715

CHEMICALLY-STABILIZED AND SEALED SUBGRADE

PART 1 GENERAL

1.1 SCOPE OF WORK

The work specified herein is an alternative to traditional lime and cement subgrade stabilization. The work specified herein consist of furnishing and placing a stabilizer and sealant treatment. The specified products are applied in a water solution on a prepared surface course; mixing suitable in-place or borrow material with the stabilizer and sealant solution; compacting the mixture to the lines, grades and dimensions as shown on the Contract Drawings; and upon completion providing a surface that is smooth and in conformance with the typical section, lines and grades as shown on the Contract Drawings.

1.2 REFERENCES

The publications listed below form a part of this specification to the extent referenced. The publications are referred to in the text by basic designation only.

AMERICAN SOCIETY FOR TESTING AND MATERIALS (ASTM)

ASTM D 1556	(1990; R 1996) Density and Unit Weight of Soil in Place by the Sand-Cone Method
ASTM D 1557	(1991) Laboratory Compaction Characteristics of Soil Using Modified Effort (56,000 ft-lbf/cu. ft. (2,700 kN-m/cu.m.))
ASTM D 1559	(1989) Resistance to Plastic flow of Bituminous Mixtures Using Marshall Apparatus
ASTM D 1883	(1994) CBR (California Bearing Ratio) of Laboratory-Compacted Soils
ASTM D 2166	(1991) Unconfined Compressive Strength of Cohesive Soil
ASTM D 2216	(1992) Laboratory Determination of Water (Moisture) Content of Soil and Rock
ASTM D 2487	(1993) Classification of Soils for Engineering Purposes (Unified Soil Classification System)
ASTM D 3740	(1996) Minimum Requirements for Agencies Engaged in the Testing and/or Inspection of Soil and Rock as Used in Engineering

	Design and Construction
ASTM D 4429	(1993) Bearing Ratio for Soils In Place
ASTM D 4609	(1994) Evaluating Effectiveness of Chemicals for Soil Stabilization
ASTM D 5255	(1992) Certification of Personnel Engaged in the Testing of Soil and Rock

1.3 UNIT PRICES

1.3.1 Measurement and Payment

Chemical stabilization, constructed and accepted, will be paid for at the contract unit price per square yard of work completed and accepted for Chemical stabilized and sealed subgrades. Payment shall be for the particular option year Line Item _005 "Penetration Oil Treatment" of the Pricing Schedule. No payment will be made for any material wasted, used for the convenience of the Contractor, unused or rejected.

1.3.2 Quality Control

Quality control work as specified herein shall be considered as part of the Contract cost for stabilization and sealing; no additional compensation shall be forthcoming for specified quality control work.

1.4 DEFINITIONS

1.4.1 Stabilization and Sealing

Stabilization and sealing is a process by which the soil materials or aggregate base or subbase is disked and pulverized, moisture conditioned, and stabilized and sealed with a dual component soil stabilization system. The soil stabilization system consists of a concentrated liquid stabilizer and a complementary non-petroleum, resinous polymeric emulsion earth materials sealant as described herein after. The stabilizer and earth materials sealant shall be formulated for the application in combination, individually added to the compaction water and then applied as a single step in the compaction process. The result is a compacted subgrade that is substantially stronger than untreated compacted subgrade.

1.4.2 Degree of Compaction

Degree of compaction is a percentage of the maximum density obtained by the test procedure presented in ASTM D 1557, Procedure C, abbreviated below as a percent of laboratory maximum dry density.

1.4.3 Water Content

The water content, also referred to as moisture content, of a material is the ratio, expressed as a percentage of the mass of "pore" or "free" water in a given mass of material to the mass of solid material. Water content shall be determined by the test procedure outlined in ASTM D 2216.

1.4.4 Emulsion and Product

Emulsion and product as referred to herein are the non-diluted products with the Trade Names: EMC SQUARED and EMS (Earth Materials Sealant), or

their approved equals.

1.4.5 Stabilizer-Sealant Solution

Stabilizer-sealant solution as referred to herein are the water diluted and blended emulsions and products.

1.5 SUBMITTALS

Government approval is required for submittals with a "GA" designation; submittals having an "FIO" designation are for information only. The following shall be submitted in accordance with Section 01330 SUBMITTAL PROCEDURES:

SD-08 Statements

Field Testing Control; GA, Inspection and Acceptance; GA.

Qualifications of the commercial testing laboratory who will be performing all testing in accordance with paragraph FIELD TESTING CONTROL. Sampling may be taken by the Buyer to validate adherence to specifications.

SD-09 Reports

Field Testing Control; GA, Environmental Acceptability; FIO

Certified test reports of all tests conducted in accordance with paragraph FIELD TESTING CONTROL. Upon request, the supplier must be able to provide independent laboratory test reports from a certified analytical laboratory experienced in environmental acceptability testing documenting tests performed on product samples of the stabilizer and earth materials sealant. These tests must include the US EPA 7000 Series (TTLC or CAM17) for metals and Method 8270 testing which verify no organic solvents or identifiable EPA 8270 target compounds were detected in amounts which exceed US EPA or State of California regulatory standards as applicable to products whose intended use involves incorporation into compacted aggregate and soil materials during construction operations.

SD-13 Certificates

Testing; GA.

Qualifications of the commercial testing laboratory or Contractor's testing facilities in accordance with ASTM D 3740 and ASTM E 329. Qualifications of testing personnel in accordance with ASTM D 5255.

SD-13 Certificates

Certification; FIO.

With each load of chemicals, the truck driver shall present to the Contracting Officer's Representative on site, one copy of a fully executed Certificate of Compliance provided by materials supplier conforming to the following format:

MATERIALS CERTIFICATION

Consignee:_____Designation:_____Date:_____

Contract Number:_____Purchase Order No._____

Identification (Truck #, etc.):_____

Net Weight of Total Shipment:_____

Brand Name:_____

This shipment of _____, identified above and covered by this Certification, complies with the specifications applicable to this project.

Materials Supplier:_____

Signed:_____
Material Supplier's Representative

PART 2 PRODUCTS

2.1 STABILIZERS AND SEALANTS

The dual component soil stabilization system shall consist of a concentrated liquid stabilizer and a complementary non-petroleum, resinous polymeric emulsion earth materials sealant as described herein after. The stabilizer and earth materials sealant shall be formulated for the application in combination, individually added to the compaction water and then applied as a single step in the construction process. The stabilizer and earth materials sealant shall be proven chemically compatible as demonstrated by effectiveness in improving and soil stability in laboratory testing by independent materials testing laboratories and as demonstrated in field application by providing effective stabilization of soil materials used as the surface course of the airfield shoulders.

2.1.1 Concentrated Liquid Stabilizer

The material shall be EMC SQUARED Stabilizer as supplied by Soil Stabilization products Company, Inc., Merced CA, 1(209) 383-3296 or 1(800) 523-9992, or approved equal. It shall be a concentrated liquid biocatalyst stabilizer formulated specifically for improving the stability of soils, select fill materials, and aggregates for use in construction of earthworks, subgrades, subbases, base courses, and for surface course materials used in construction and maintenance of unpaved roads, runways, shoulders, and other traffic surfaces. The stabilizer shall be suitable for dilution in a water solution to allow for adequate dispersion of the liquid concentrate. The pH of the concentrated stabilizer shall be not less than 6 and not higher than 10. The stabilizer shall be nonhazardous, non-toxic, nonflammable, and noncorrosive. It shall not be a byproduct or additive used primarily for dust control of road surfaces. The stabilizer shall be capable of being handled without the use of protective breathing apparatus or protective clothing. A standard materials Safety Data Sheet shall be furnished by the supplier.

2.1.1.1 Application Requirements

When applied at an application rate of not less than one gallon of EMC SQUARED and two gallons of EMS per 15 cubic yards of soil. The tolerance from the specified addition rate shall be plus or minus 10 percent. When

placed within the manufacturer's parameters for dilution, moisture control, processing, compaction and curing, the stabilizer solution shall increase the compressive strength, stability, tensile strength, resistance to moisture and frost damage, and resistance to erosion by wind and water. Evidence of the effectiveness of the stabilizer shall be available from materials testing laboratories, independent from the manufacturer or supplier. Laboratory test history shall include treated soil classifications (in accordance with ASTM D 2487), CBR (California Bearing Ratio), Compaction Characteristics, Marshall Stability, R Value, Shear Strength, Split Tension, Laboratory Suction and Dielectric Measurement, and Unconfined Compression Strength test reports.

2.1.1.2 Protection

The stabilizer shall be protected during transportation and storage. An airtight seal shall be maintained to protect against air contamination. Any product which has been left open to air contamination shall be rejected.

2.1.2 Earth Materials Sealant

The material shall be EMS EARTH MATERIALS SEALANT, as supplied by Soil Stabilization products Company, Inc., Merced CA, 1(209) 383-3296 or 1(800) 523-9992, or approved equal. It shall be specifically formulated for compatibility with the EMC SQUARED Stabilizer for use in protecting compacted soil materials against moisture infiltration and for reducing the hydraulic conductivity of soil liners constructed for moisture barrier and water retention applications. The earth materials sealant shall be suitable for dilution in a water solution to allow for adequate dispersion of the liquid concentrate. The pH of the concentrated sealant shall be not less than 6 and not higher than 10. The earth materials sealant shall be a non-petroleum resinous polymeric emulsion that is nonhazardous, non-toxic, nonflammable and non corrosive. It shall not be a byproduct or additive used primarily for dust control of road surfaces. The stabilizer shall be capable of being handled without the use of protective breathing apparatus or protective clothing. A standard materials Safety Data Sheet shall be furnished by the supplier.

2.1.2.1 Application Requirements

When applied at an application rate of not less than one gallon of EMC SQUARED and two gallons of EMS per 15 cubic yards of soil and within the manufacturer's parameters for dilution, moisture control, processing, compaction and curing, the stabilizer and earth materials sealant solution shall improve the shear strength and the bearing strength and reduce the moisture susceptibility of the soil materials. Evidence of the effectiveness of the stabilizer shall be available from materials testing laboratories, independent from the manufacturer or supplier. Laboratory test history shall include R Value, Shear Strength, Suction and Dielectric Measurement, and Unconfined Compression Strength test reports, demonstrating that the stabilizer and earth material sealant combination have been effective in improvement of both granular, non-plastic materials and cohesive, highly plastic soils.

PART 3 EXECUTION

3.1 PREPARATION OF SURFACE

If an in-place soil or aggregate material is to be stabilized which is not

already in a loose state, it must first be ripped, scarified, disked or roto tilled into a well-pulverized mixture for a minimum depth of 6 inches. If the stabilization project involves the treatment of heavy clay soils, the Contracting Officer may specify the use of cross-shaft rotary mixer to assure proper pulverization and mixing. **If the material to be treated is already at or above the optimum moisture content, it must be dried to a minimum of two percentage points below the optimum water content in preparation for addition of the stabilizer and sealant solution**. Do not pre wet the soil or aggregate prior to applying the stabilizer and sealant solution.

3.2 APPLICATION OF STABILIZER-SEALANT SOLUTION

3.2.1 General

Application of the stabilizer-sealant solution shall be limited to the area specifically shaped and sized to receive the solution, and it shall be limited to such an area that all operations including mixing and compaction can be continuous and completed in one day. If overnight temperatures will not drop below 32 degrees F, it is the Contracting Officer's option to allow treated material to remain in a stockpile or winrow overnight with the precaution that the moisture must still be properly adjusted for compaction operations.

3.2.2 Atmospheric Temperature

The stabilizer-sealant solution shall not be applied or mixed with in-place material if atmospheric temperature is below 50 degrees F, or when conditions indicate that the temperature will be below 32 degrees F within 24 hours unless the Contracting Officer approves application in colder conditions for special project requirements.

3.2.3 Weather Conditions

Unless otherwise indicated by the Contracting Officer, application of the stabilizer-sealant solution shall be limited to periods when rainfall is not expected during the application or during the 24 hour period following application. If rainfall occurs during application, mixing and compaction and excessive loss of solution due to washing occurs, stabilizer-sealant solution will not be accepted for payment.

3.2.4 Application Rate

Unless otherwise indicated, the EMC SQUARED and EMS stabilizer and sealant solution shall be applied at one gallon of EMC SQUARED and two gallons of EMS per 15 cubic yards of material to be treated. The tolerance from the specified addition rate is not more than plus or minus 10 percent.

3.2.5 Quantity of Water Required

3.2.5.1 General

The amount of water to be used shall be calculated to bring the soil or aggregate material to be treated to optimum moisture content per the materials testing information provided by the Contracting Officer. For soil and aggregate materials that have been determined to have a clay fraction as indicated by a Plasticity index (P.I.) of 5 or greater, the optimum moisture content for field construction should be lowered by one percentage point from that determined in the laboratory for the untreated

material. **In any case, the moisture content for the treated soil or aggregate material <u>at the time of compaction</u> shall be not more than 1 percentage point above or more than 2 percentage points below the optimum moisture content as determined for the untreated soil by ASTM D 1557 and verified in the field by ASTM D 2216.**

3.2.5.2 Arid and Semi-Arid Regions

In arid and semi-arid regions and during periods of hot and windy weather in other regions, considerable amounts of water may be required to bring the treated material up to the optimum moisture content. It is generally recommended that soils be worked on the dry side of the optimum moisture content when constructing projects in arid or semi-arid regions.

3.2.5.3 Other Conditions

In conditions where the in-place material to be treated is already close to optimum moisture content, a minimum of two percent water must be added to the stabilizer-sealant solution in order to properly disperse the highly concentrated treatment system. Use soil mixing and aeration procedures to dry-back aggregate or soil as required to allow for the addition of the proper quantity of stabilizer and sealant solution.

3.2.5.4 Stabilizer-Sealant-Water Mixing

A metered pump shall be used to add the stabilizer and sealant to the water. The capacity of the mixing tank should be determined to allow for accurate proportioning of the stabilizer-sealant solution. The water tank shall be partially filled with water, the stabilizer and sealant added, then the required remaining quantity of water added. The turbulence of the water addition will provide adequate mixing action to prepare the solution.

3.2.6 Application Methods

The stabilizer-sealant solution should be applied to the material to be treated by a pressurized spreader truck or a pressurized spreader bar and an accurate speedometer to ensure uniform distribution of the stabilizer and sealant solution. The Contracting Officer may approve other water spray equipment that can be demonstrated to provide a uniform spray pattern. If the full width spray pattern is not to the Contracting Officer's satisfaction, placement of the treated material into winrows followed by blade-mix processing to provide a homogeneously moisturized mixture may be required.

3.2.7 Soil and Stabilizer-Sealant Solution Blending

The material to be treated and the stabilizer-sealant solution shall be be thoroughly mixed by tractor drawn spike, disc harrows, or cross shaft rotary mixers. At the Contracting officer's option, mixing by motor grader scarification teeth or by blade mix processing may be allowed. Water should not be added to the material prior to adding the stabilizer-sealant solution. Mixing equipment shall follow no more than 1000 feet behind the spray application truck. Stabilizer-sealant solution shall be added in increments and mixing continued to carefully approach the optimum moisture content of the material being stabilized and sealed.

3.2.7.1 Precautions

The stabilizer-sealant solution significantly retards the evaporation and

dry-back of materials during construction, and the solution increases the moisture penetration. This may cause the treated material to appear dry when near the optimum moisture content; exercise caution when adding additional solution. If the entire quantity of stabilizer-sealant solution allotted for the designated volume of material to be treated has been added without achieving a homogeneously wetted mixture within the range of allowable moisture content, then water may be added to the soil-solution blend to bring it within the specified tolerances using the same attention to uniform distribution as was given to to the addition of the stabilizer and sealant solution. It is critical to the stabilization and sealing process that the stabilizer-sealant solution be thoroughly dispersed and blended with the soil material. Multiple mixing passes must be used to blend the material to the satisfaction of the Contracting Officer.

3.2.8 Compaction

3.2.8.1 General

Compaction operations can begin immediately following attainment of proper mixing and moisture content of the treated material. **Compaction equipment shall be capable of compacting the untreated material to a density of not less than 95 percent of the ASTM D 1557, Procedure C, maximum dry density**. Compaction is critical to performance; the highest degree of compaction practically possible shall be utilized.

3.2.8.2 Equipment

Sheepsfoot and pad type rollers can be utilized to compact lower lifts and for initial compaction of the final lifts. Pneumatic-tired rollers, static steel-wheeled rollers, or vibratory steel-wheeled rollers should be used to construct the final compacted surface. Pneumatic-tired rollers in combination with steel-wheeled rollers provide the smoothest and most sealed surfaces.

3.2.8.3 Lift Thickness

Blended materials shall be compacted in uniform layers of not more the 8 inches in loose thickness. The compaction operations shall continue and the treated material shall be maintained within the specified range of moisture content until the specified density has been achieved. All areas of treated materials shall be given a minimum of six complete coverages of roller equipment.

3.2.8.4 Grading

Upon completion, the surface shall be smooth, and in conformity with the typical section, lines, and grades as shown on the Contract Drawings. The average thickness of the compacted, treated material shall not vary more than 1 inch from the thickness specified.

3.2.9 Curing and Return to Service

An EMC SQUARED and EMS treated material will gain noticeable strength and surface hardness during the first several days following final compaction. No surface watering or curing membrane is required during this period. If the surface must be rapidly returned to service under traffic, it should be dried-back adequately so that it is not susceptible to rutting or damage by rapid acceleration and braking. Once the initial stages of stability have been achieved, the treated materials will benefit from the additional

compaction of traffic when placed back in service. A three day minimum curing period is required before placement of pavement surfaces or chip seals. Emulsion surface treatments may be placed immediately upon completion of compaction operations.

3.3 FIELD TESTING CONTROL

Testing shall be the responsibility of the Contractor and shall be performed by a commercial testing laboratory subject to approval and meeting the requirements specified in ASTM D 3740. Testing personnel shall be certified for the requirements outlined in ASTM D 5255. Tests shall be performed in sets of two tests per set with one set being performed at intervals of 2000 square yards or portion thereof. Laboratory testing shall be performed in general compliance with the requirements outlined in ASTM D 4609 except as specified herein. All laboratory strength testing on untreated soil materials shall be performed on the materials compacted to 95 percent of the laboratory maximum dry density with 2 percent of the optimum water content. All laboratory testing on stabilizer-sealant solution treated materials shall be performed on materials compacted to the densities, water contents, and with the stabilizer-sealant solution concentrations specified herein before.

3.3.1 Test Result Submittal

Test results from each set location shall be submitted on a "Test Log" which shall include the following, as applicable: test date, test number, feature of work, station/location, offset, elevation, classification, compaction curve, mold and core sample dimensions, field and laboratory dry densities and dry unit weights, moisture content, stabilizer-sealant concentration, unconfined compressive strengths, and CBR values. Results shall be submitted within 24 hours of test completion.

3.3.2 Test Schedule and Locations

3.3.2.1 Preconstruction Testing

Prior to construction, the Contractor shall perform representative random testing on samples of the material from the subgrade to be tested. Both treated and untreated samples will be tested to determine if significant gains in unconfined shear strength and California Bearing Ratio (CBR) can be obtained. In no case will the unconfined compressive strength be less than 150 psi when compacted to the design percent of laboratory maximum density. If preconstruction tests indicate that significant strength gains are not obtainable or not economical, another method of stabilization, such as lime or cement treatment, will be attempted. Consultation and agreement of the Contracting Officer will be obtained prior to changing stabilization methods.

3.3.2.2 Construction Testing

On set of two tests shall be performed from samples taken at intervals of 2000 square yards or any portion thereof. The Contractor shall submit a map-plan view of the test locations. Test locations and offsets shall be within 10 feet of the locations shown on the map-plan. Individual test samples for each set shall be taken within 3 feet of one another.

3.3.3 Classification and Moisture-Density Relationships

One classification and moisture density relationship shall be performed for

the untreated material of each test set. Classification shall be in accordance with ASTM D 2487. Moisture-density relationships shall be determined by the test method outlined in ASTM D 1557, Procedure C.

3.3.4 Field Density with Moisture Content

Field density and moisture content tests shall be performed for untreated and stabilizer-sealant solution treated materials at each test set location. Field in-place density shall be determined in accordance with ASTM D 1556. Moisture content shall be determined by the test method outlined in ASTM D 2216.

-- End of Section --

SECTION TABLE OF CONTENTS

DIVISION 02 - SITE WORK

SECTION 02721

SUBBASE COURSES

PART 1 GENERAL

1.1 REFERENCES
1.2 SUBBASE COURSE
1.2.1 Measurement
1.2.2 Payment
1.2.3 Waybills and Delivery Tickets
1.3 PROOF ROLLED FOR AIRFIELD
1.3.1 Measurement
1.3.2 Payment
1.4 DEGREE OF COMPACTION
1.5 SUBMITTALS
1.6 SAMPLING AND TESTING
1.6.1 Sampling
1.6.2 Test Methods
1.6.2.1 Sieve Analysis
1.6.2.2 Liquid Limit and Plasticity Index
1.6.2.3 Moisture-Density Determinations
1.6.2.4 Density Tests
1.6.2.5 Wear Test
1.6.3 Initial Testing
1.6.3.1 Approval of Material
1.6.4 Construction Testing
1.6.4.1 Inplace Field Density with Moisture Content
1.6.4.2 Gradation with Atterberg Limits
1.6.4.3 Moisture-Density Relationships with Gradation, Atterberg Limits, Specific Gravity, and Classification
1.6.4.4 Tolerance Tests
1.7 WEATHER LIMITATIONS
1.8 EQUIPMENT

PART 2 PRODUCTS

2.1 MATERIALS
2.1.1 Subbase Course

PART 3 EXECUTION

3.1 OPERATION OF AGGREGATE SOURCES
3.2 STOCKPILING MATERIAL
3.3 PREPARATION OF UNDERLYING MATERIAL
3.4 GRADE CONTROL
3.5 MIXING AND PLACING MATERIALS
3.6 LAYER THICKNESS
3.7 COMPACTION
3.8 PROOF ROLLING (For Airfield only)

3.9 EDGES
3.10 SMOOTHNESS TEST
3.11 THICKNESS CONTROL
3.12 MAINTENANCE
3.13 CONSTRUCTION QUALITY CONTROL

-- End of Section Table of Contents --

SECTION 02721

SUBBASE COURSES

PART 1 GENERAL

1.1 REFERENCES

The publications listed below form a part of this specification to the extent referenced. The publications are referred to in the text by basic designation only.

AMERICAN SOCIETY FOR TESTING AND MATERIALS (ASTM)

ASTM C 29	(1991a) Unit Weight and Voids in Aggregate
ASTM C 117	(1995) Materials Finer Than 75 micrometer (No. 200) Sieve in Mineral Aggregates by Washing
ASTM C 131	(1996) Resistance to Degradation of Small-Size Coarse Aggregate by Abrasion and Impact in the Los Angeles Machine
ASTM C 136	(1995a) Sieve Analysis of Fine and Coarse Aggregates
ASTM D 75	(1987; R 1992) Sampling Aggregates
ASTM D 1556	(1990) Density and Unit Weight of Soil in Place by the Sand-Cone Method
ASTM D 1557	(1991) Laboratory Compaction Characteristics of Soil Using Modified Effort (56,000 ft-lbf/cu. ft. (2,700 kN-m/cu.m.))
ASTM D 2167	(1994) Density and Unit Weight of Soil in Place by the Rubber Balloon Method
ASTM D 2487	(1993) Classification of Soils for Engineering Purposes (Unified Soil Classification System)
ASTM D 2922	(1991) Density of Soil and Soil-Aggregate in Place by Nuclear Methods (Shallow Depth)
ASTM D 3017	(1988; R 1993) Water Content of Soil and Rock in Place by Nuclear Methods (Shallow Depth)
ASTM D 3740	(1996) Minimum Requirements for Agencies Engaged in the Testing and/or Inspection of Soil and Rock as Used in Engineering Design and Construction

ASTM D 4318	(1993) Liquid Limit, Plastic Limit, and Plasticity Index of Soils
ASTM D 5255	(1992)Certification of Personnel Engaged in the Testing of Soil and Rock
ASTM E 11	(1995) Wire-Cloth Sieves for Testing Purposes

DEPARTMENT OF THE ARMY, CORPS OF ENGINEERS

CESPK PAM 415-1-2	Construction Control Manual

1.2 SUBBASE COURSE

1.2.1 Measurement

The quantity of 6-inch thick and each additional inch of subbase course completed and accepted as determined by the Contracting Officer shall be measured in square yards.

1.2.2 Payment

Quantities of subbase course, determined as specified in paragraph Measurement, will be paid for at the respective unit prices for the base year Line Items 0001AF and 0003AC, "SUBBASE 6"" and 0001AG, "EACH ADDED INCH" of the Pricing Schedule, which shall constitute full compensation for the construction and completion of the subbase course.

1.2.3 Waybills and Delivery Tickets

Copies of waybills and delivery tickets shall be submitted during the progress of the work. Before the final statement is allowed, the Contractor shall file certified waybills and certified delivery tickets for all aggregates actually used.

1.3 PROOF ROLLED FOR AIRFIELD

1.3.1 Measurement

Proof rolling of subbase course for airfield shall be measured in square yard of the completed subbase courses.

1.3.2 Payment

Quantities of the proof rolling of subbase course, determined as specified in paragraph Measurement, will be paid for at the respective contract unit prices

1.4 DEGREE OF COMPACTION

Degree of compaction is a percentage of the maximum density obtained by the test procedure presented in ASTM D 1557, Procedure C. In this specification, degree of compaction shall be a percentage of laboratory maximum dry density.

1.5 SUBMITTALS

Government approval is required for submittals with a "GA" designation; submittals having an "FIO" designation are for information only. The following shall be submitted in accordance with Section 01330 SUBMITTAL PROCEDURES:

SD-01 Data

Equipment; FIO.

List of proposed equipment to be used in performance of construction work, including descriptive data.

SD-09 Reports

Sampling and Testing; GA.
Two copies of initial and in-place test results within 24 hours of test completion.

SD-18 Records

Waybills and Delivery Tickets; FIO.

Copies of waybills and delivery tickets during the progress of the work. Certified waybills and delivery tickets for all aggregates actually used.

1.6 SAMPLING AND TESTING

Sampling and testing shall be the responsibility of the Contractor. The testing laboratory shall meet the requirements outlined in ASTM D 3740. Testing personnel shall meet the requirements outlined in ASTM D 5255. Sampling and testing shall be performed by an approved testing laboratory in accordance with Section 01451 CONTRACTOR QUALITY CONTROL. Tests shall be performed at the specified frequency. No work requiring testing will be permitted until the testing laboratory has been inspected and approved. The materials shall be tested to establish compliance with the specified requirements.

1.6.1 Sampling

Samples for laboratory testing shall be taken in conformance with ASTM D 75. When deemed necessary, the sampling will be observed by the Contracting Officer.

1.6.2 Test Methods

1.6.2.1 Sieve Analysis

Sieve analysis shall be made in conformance with ASTM C 117 and ASTM C 136, as applicable. Sieves shall conform to ASTM E 11.

1.6.2.2 Liquid Limit and Plasticity Index

Liquid limit and plasticity index shall be determined in accordance with ASTM D 4318.

1.6.2.3 Moisture-Density Determinations

The maximum dry density and optimum moisture shall be determined in

accordance with ASTM D 1557, Procedure C. Water contents shall be determined by the test method outlined in ASTM D 2216.

1.6.2.4 Density Tests

Density shall be field measured in accordance with ASTM D 1556 or ASTM D 2922. When ASTM D 1556 is used, the base plate, as shown in the drawing shall be used. When ASTM D 2922 is used, the Contractor shall obtain all necessary permits and authorizations for the use of the nuclear gage. When ASTM D 2922, the calibration curves shall be checked and adjusted, if necessary, using only the sand cone method as described in paragraph Calibration, of the ASTM publication. Tests performed in accordance with ASTM D 2922 result in a wet unit weight of soil and, when using this method, ASTM D 3017 shall be used to determine the moisture content of the soil. The calibration curves furnished with the moisture gauges shall also be checked along with density calibration checks as described in ASTM D 3017. The calibration checks of both the density and moisture gauges shall be made by the prepared containers of material method, as described in paragraph Calibration, in ASTM D 2922, on each different type of material to be tested at the beginning of the job. Also every set of five ASTM D 2922 test shall be correlated with one ASTM D 1556 test unless otherwise directed.

1.6.2.5 Wear Test

Wear tests shall be made on subbase course material in conformance with ASTM C 131.

1.6.3 Initial Testing

One of each of the following tests shall be performed on the proposed material prior to commencing construction to demonstrate that the proposed material meets all specified requirements prior to installation.

a. Sieve Analysis.
b. Liquid limit and plasticity index and moisture-density relationship
c. Wear
d. Water content
e. Weight per cubic foot

1.6.3.1 Approval of Material

The source of the material shall be selected 30 days prior to the time the material will be required in the work. Approval of the materials shall be obtained from the Contracting Officer prior to delivery to the site.

1.6.4 Construction Testing

Testing shall be performed in conformance with CESPK PAM 415-1-2.

1.6.4.1 Inplace Field Density with Moisture Content

a. Two tests per lift for each increment or fraction of 1000 square yards, placed during each 8 hour shift for areas compacted by other than hand-operated machines.

b. One random test at each location, of each lift of select-material subbase or subbase areas compacted by hand-operated machines.

1.6.4.2 Gradation with Atterberg Limits

From compacted material, one test for every five in-place density tests.

1.6.4.3 Moisture-Density Relationships with Gradation, Atterberg Limits, Specific Gravity, and Classification

One test for every five field density tests, with not less than one for each type of material.

1.6.4.4 Tolerance Tests

Continuous checks on the smoothness, thickness, and grade shall be made during construction of the subgrades. Requirements are specified herein after.

1.7 WEATHER LIMITATIONS

Construction shall be done when the atmospheric temperature is above 35 degrees F. When the temperature falls below 35 degrees F, the Contractor shall protect all completed areas by approved methods against detrimental effects of freezing. Completed areas damaged by freezing, rainfall, or other weather conditions shall be corrected to meet specified requirements at no additional cost to the Government.

1.8 EQUIPMENT

All plant, equipment, and tools used in the performance of the work will be subject to approval before the work is started and shall be maintained in satisfactory working condition at all times. The equipment shall be adequate and shall have the capability of producing the required compaction, meeting grade controls, thickness control, and smoothness requirements as set forth herein.

PART 2 PRODUCTS

2.1 MATERIALS

2.1.1 Subbase Course

Aggregates shall consist of crushed stone, gravel, shell, sand, or other sound, durable, approved materials processed and blended or naturally combined. Aggregates shall be durable and sound, free from lumps and balls of clay, organic matter, objectionable coatings, and other foreign material. Material retained on the No. 4 sieve shall have a percentage of wear not to exceed 50 percent after 500 revolutions when tested as specified in ASTM C 131. Aggregate shall be of uniform density and quality. Aggregates shall have a maximum size of 2 inchesand shall be within the limits specified as follows:

Sieve Designation	Maximum Allowable Percentage by Weight Passing Square-Mesh Sieve
2-inch	100
No. 10	50
No. 200	15

The portion of any blended component and of the completed course passing

the No. 40 sieve shall be either nonplastic or shall have a liquid limit not greater than 25 and a plasticity index not greater than 5.

PART 3 EXECUTION

3.1 OPERATION OF AGGREGATE SOURCES

All clearing, stripping and excavating work involved in the opening or operation of aggregate sources shall be performed by the Contractor. Aggregate sources shall be opened to working depth in a manner that produces excavation faces that are as nearly vertical as practicable for the materials being excavated. Materials excavated from aggregate sources shall be obtained in successive cuts extending through all exposed strata. All pockets or strata of unsuitable materials overlying or occurring in the deposit shall be wasted as directed. The methods of operating aggregate sources and the processing and blending of the material may be changed or modified by the Contracting Officer, when necessary, in order to obtain material conforming to specified requirements. Upon completion of work aggregate sources shall be conditioned in agreement with local laws and authorities and shall be left in a satisfactory condition.

3.2 STOCKPILING MATERIAL

Prior to stockpiling of material, storage sites shall be cleared and leveled by the Contractor. All materials, including approved material available from excavation and grading, shall be stockpiled in the manner and at the locations designated. Aggregates shall be stockpiled on the cleared and leveled areas designated by the Contracting Officer so as to prevent segregation and contamination. Materials obtained from different sources shall be stockpiled separately.

3.3 PREPARATION OF UNDERLYING MATERIAL

Prior to constructing the subbase course, the underlying subgrade shall be cleaned of all foreign substances. The surface of the underlying subgrade shall meet specified compaction and surface tolerances of Section 02300 EARTHWORK. Ruts and unstable areas in the underlying subgrade, and deviations of the surface from the specified requirements, shall be corrected. Corrections shall be performed by loosening and removing the soft and unsatisfactory materials and by adding approved material, reshaping to line and grade, and recompacting to specified density requirements. For cohesionless underlying courses or subgrades containing sands or gravels, as defined in ASTM D 2487, the surface shall be stabilized prior to placement of the subbase course. Stabilization shall be accomplished by mixing subbase material into the underlying course, and compacting by approved methods. The stabilized material shall be considered as part of the underlying course and shall meet all requirements for the underlying course. The finished underlying course shall not be disturbed by traffic or other operations and shall be maintained by the Contractor in a satisfactory condition until the subbase course is placed.

3.4 GRADE CONTROL

The finished and completed subbase course shall conform to the lines, grades, and cross sections shown. The lines, grades, and cross sections shown shall be maintained by means of line and grade stakes placed by the Contractor at the work site.

3.5 MIXING AND PLACING MATERIALS

The materials shall be mixed and placed to obtain uniformity of the subbase material at the water content specified. The Contractor shall make such adjustments in mixing or placing procedures or in equipment as may be directed to obtain the true grades, to minimize segregation and degradation, to reduce or accelerate loss or increase of water, and to insure a satisfactory subbase course.

3.6 LAYER THICKNESS

The compacted thickness of the completed course shall be as indicated. When a compacted layer of 6 inches is specified, the material may be placed in a single layer; when a compacted thickness of more than 6 inches is required, no layer shall exceed 6 inches nor be less than 3 inches when compacted.

3.7 COMPACTION

Each layer of the subbase course shall be compacted as specified with approved compaction equipment. Water content shall be maintained during the compaction procedure to within plus or minus 2 percent of the optimum water content, as determined from laboratory tests, as specified in paragraph MOISTURE-DENSITY DETERMINATIONS. In all places not accessible to the rollers, the mixture shall be compacted with hand-operated power tampers. Compaction shall continue until each layer is compacted through the full depth to at least 95 percent of laboratory maximum dry density. The Contractor shall make such adjustments in compacting or finishing procedures as may be directed to obtain true grades, to minimize segregation and degradation, to reduce or increase water content, and to ensure a satisfactory subbase course. Any materials that are found to be unsatisfactory shall be removed and replaced with satisfactory material or reworked, as directed, to meet the requirements of this specification.

3.8 PROOF ROLLING (For Airfield only)

Areas designated in the drawing to be proof rolled shall receive an application of 30 coverages with a heavy pneumatic-tired roller having four or more tires abreast, each tire loaded to a minimum of 30,000 pounds and inflated to a minimum of 60 psi. A coverage is defined as the application of one tire print over the designated area. In the areas designated, proof rolling shall be applied to the top layer of the completed subbase course. Water content of the top layer of the subbase course shall be maintained such that the water content is within plus or minus 2 percent of optimum water content, as determined from laboratory tests, as specified in paragraph MOISTURE-DENSITY DETERMINATIONS. Any material in the subbase courses or underlying materials indicated to be unsatisfactory by the proof rolling shall be removed, dried, and recompacted, or removed and replaced with satisfactory materials at no additional cost to the Government.

3.9 EDGES

Approved material shall be placed along the edges of the subbase course in such quantity as will compact to the thickness of the course being constructed. When the course is being constructed in two or more layers, at least a 1 foot width of the shoulder shall be rolled and compacted simultaneously with the rolling and compacting of each layer of the subbase course, as directed.

3.10 SMOOTHNESS TEST

The surface of each layer shall not show deviations in excess of 3/8 inch when tested with a 12-foot straightedge applied parallel with and at right angles to the centerline of the area to be paved. Deviations exceeding this amount shall be corrected by removing material, replacing with new material, or reworking existing material and compacting, as directed.

3.11 THICKNESS CONTROL

The completed thickness of the subbase course shall be in accordance with the thickness and grade indicated on the drawings. The thickness of each course shall be measured at intervals providing at least one measurement for each 500 square yards or part thereof of subbase course. The thickness measurement shall be made by taking differential elevations, at preselected locations, between the top of the compacted subgrade and the top of the completed subbase course. The completed subbase course shall not be more than 1/2 inch deficient in thickness nor more than 1/2 inch above or below the established grade. Where any of these tolerances are exceeded, the Contractor shall correct such areas by scarifying, adding new material of proper gradation or removing material, and compacting, as directed. Where the measured thickness is 1/2 inch or more thicker than shown, the course will be considered as conforming with the specified thickness requirements. The average job thickness shall be the average of the job measurements as specified above but within 1/4 inch of the thickness shown.

3.12 MAINTENANCE

The subbase course shall be maintained in a satisfactory condition until accepted.

3.13 CONSTRUCTION QUALITY CONTROL

Attention is directed to the applicable sections which requires the Contractor to perform quality control inspection, testing, and reporting.

-- End of Section --

SECTION TABLE OF CONTENTS

DIVISION 02 - SITE WORK

SECTION 02722

AGGREGATE BASE COURSE

PART 1 GENERAL

1.1 REFERENCES
1.2 DEFINITIONS
1.2.1 Aggregate Base
1.2.2 Degree of Compaction
1.3 GENERAL
1.4 UNIT PRICES
1.4.1 Measurement
1.4.2 Payment for Quantities
1.5 SUBMITTALS
1.6 WAYBILLS AND DELIVERY TICKETS
1.7 WEATHER LIMITATIONS
1.8 PLANT, EQUIPMENT, MACHINES, AND TOOLS
1.8.1 General Requirements
1.8.2 Steel-Wheeled Rollers
1.8.3 Pneumatic-Tired Rollers
1.8.4 Pulverizing Equipment
1.8.5 Mechanical Spreader
1.8.6 Sprinkling Equipment
1.8.7 Tampers
1.8.8 Straightedge
1.9 STOCKPILING MATERIALS
1.10 SAMPLING AND TESTING
1.10.1 General Requirements
1.10.2 Test Results
1.10.3 Sampling
1.10.4 Field Density with Moisture Content
1.10.5 Gradation with Atterberg Limits
1.10.6 Moisture-Density Relationship
1.10.7 Degradation Tests

PART 2 PRODUCTS

2.1 MATERIALS
2.1.1 Aggregates
2.1.1.1 Coarse Aggregate
2.1.2 Binder Material
2.1.3 Gradation
2.1.4 Pulverized Asphalt Concrete

PART 3 EXECUTION

3.1 GENERAL REQUIREMENTS
3.2 OPERATION OF AGGREGATE SOURCES
3.3 PREPARATION OF UNDERLYING COURSE

3.3.1 General Requirements
3.3.2 Grade Control
3.4 INSTALLATION
3.4.1 Mixing and Placing
3.4.2 Edges of Base Course
3.4.3 Compaction
3.4.4 Layer Thickness
3.4.5 Finishing
3.4.5.1 Smoothness
3.4.5.2 Thickness Control
3.5 FIELD QUALITY CONTROL
3.5.1 Field Density With Moisture Content
3.5.2 Gradation With Atterberg Limits
3.5.3 Moisture-Density Relationship
3.5.4 Degradation Tests
3.5.5 Smoothness
3.5.6 Thickness
3.6 TRAFFIC
3.7 MAINTENANCE
3.8 DISPOSAL OF UNSATISFACTORY MATERIALS
3.9 CONSTRUCTION QUALITY CONTROL

-- End of Section Table of Contents --

SECTION 02722

AGGREGATE BASE COURSE

PART 1 GENERAL

1.1 REFERENCES

The publications listed below form a part of this specification to the extent referenced. The publications are referred to in the text by basic designation only.

AMERICAN SOCIETY FOR TESTING AND MATERIALS (ASTM)

ASTM C 29/C 29M	(1997) Bulk Density ("Unit Weight") and Voids in Aggregate
ASTM C 88	(1990) Soundness of Aggregates by Use of Sodium Sulfate or Magnesium Sulfate
ASTM C 117	(1995) Materials Finer Than 75 micrometer (No. 200) Sieve in Mineral Aggregates by Washing
ASTM C 127	(1988; R 1993) Specific Gravity and Absorption of Course Aggregate
ASTM C 128	(1993) Specific Gravity and Absorption of Fine Aggregate
ASTM C 131	(1996) Resistance to Degradation of Small-Size Coarse Aggregate by Abrasion and Impact in the Los Angeles Machine
ASTM C 136	(1996a) Sieve Analysis of Fine and Coarse Aggregates
ASTM D 75	(1987; R 1992) Sampling Aggregates
ASTM D 422	(1963; R 1990) Particle-Size Analysis of Soils
ASTM D 1556	(1990; R 1996) Density and Unit Weight of Soil in Place by the Sand-Cone Method
ASTM D 1557	(1991) Laboratory Compaction Characteristics of Soil Using Modified Effort (56,000 ft-lbf/cu. ft. (2,700 kN-m/cu. m.))
ASTM D 2167	(1994) Density and Unit Weight of Soil in Place by the Rubber Balloon Method
ASTM D 2487	(1993) Classification of Soils for

	Engineering Purposes (Unified Soil Classification System)
ASTM D 2922	(1996) Density of Soil and Soil-Aggregate in Place by Nuclear Methods (Shallow Depth)
ASTM D 3017	(1996) Water Content of Soil and Rock in Place by Nuclear Methods (Shallow Depth)
ASTM D 3740	(1996) Minimum Requirements for Agencies Engaged in the Testing and/or Inspection of Soil and Rock as Used in Engineering Design and Construction
ASTM D 4318	(1995a) Liquid Limit, Plastic Limit, and Plasticity Index of Soils
ASTM D 5255	(1992)Certification of Personnel Engaged in the Testing of Soil and Rock
ASTM E 11	(1995) Wire-Cloth Sieves for Testing Purposes
ASTM E 329	(1990) Evaluation of Testing and Inspection Agencies as Used in Construction

DEPARTMENT OF THE ARMY, CORPS OF ENGINEERS

CESPK PAM 415-1-2	Construction Control Manual
COE CRD-C 171	Determining Percentage of Crushed Particles in Aggregate

1.2 DEFINITIONS

1.2.1 Aggregate Base

Aggregate base as used herein is well graded, durable aggregate uniformly moistened and mechanically stabilized by compaction.

1.2.2 Degree of Compaction

Degree of compaction required is expressed as a percentage of the maximum density obtained by the test procedure presented in ASTM D 1557 Procedure C abbreviated herein after as percent laboratory maximum dry density.

1.3 GENERAL

The work specified herein consists of the construction of an aggregate base course. The work shall be performed in accordance with this specification and shall conform to the lines, grades, notes and typical sections shown in the plans. Sources of all materials shall be selected well in advance of the time that materials will be required in the work.

1.4 UNIT PRICES

1.4.1 Measurement

The quantity of 6-inch thick and each additional inch aggregate base course

completed and accepted, as determined by the Contracting Officer, will be measured in square yards. The area of material in-place and accepted will be determined by the average job thickness obtained in accordance with paragraph THICKNESS CONTROL and the dimensions shown. The quantity of pulverization of existing asphalt roadway pavement and compacting as aggregate base shall measured in the number of square yards of existing asphalt pavement pulverized, compacted, and accepted as base regardless of the existing asphalt concrete thickness.

1.4.2 Payment for Quantities

Quantities of aggregate base course, determined as specified above, will be paid for at the respective contract unit prices for the base year Line Items 0001AD and 0003AB for "BASE 6"" and 0001AE, "EACH ADDED INCH" of the Pricing Schedule, which shall constitute full compensation for the construction and completion of the aggregate base course. Aggregate base shall be considered as part of the incidental items for the base year Line Item 0002, "PATCHING EXISTING ASPHALT"; no additional compensation shall be forthcoming for patching aggregate base. Also, the quantities of existing asphalt concrete pulverized and recompacted as aggregate base shall be paid for at the contract unit price for base year Line Item 0001AI, "PULVERIZE ASPHALT".

1.5 SUBMITTALS

Government approval is required for submittals with a "GA" designation; submittals having an "FIO" designation are for information only. The following shall be submitted in accordance with Section 01300 SUBMITTAL DESCRIPTIONS:

SD-01 Data

Plant, Equipment, Machines, and Tools; GA.

List of proposed equipment to be used in performance of construction and pulverizing work including descriptive data. Construction and pulverization equipment shall be approved-of prior to delivery to the site.

SD-09 Reports

Sampling and Testing; FIO. Field Density; FIO.

Calibration curves and related test results prior to using the device or equipment being calibrated. Copies of field test results within 24 hours after the tests are performed. Certified copies of test results for approval not less than 30 days before material is required for the work.

SD-18 Records

Waybills and Delivery Tickets; FIO. Coarse Aggregate; FIO.

Copies of waybills and delivery tickets during the progress of the work. Certified waybills and delivery tickets for all materials actually used. A notification stating which type of coarse aggregate is to be used.

1.6 WAYBILLS AND DELIVERY TICKETS

Copies of waybills or delivery tickets shall be submitted during the progress of the work. Before the final payment is allowed, waybills and

certified delivery tickets shall be furnished for all aggregates actually used in the construction.

1.7 WEATHER LIMITATIONS

Base shall not be constructed when the atmospheric temperature is less than 35 degrees F. Base shall not be constructed on subgrades or subbases that are frozen or contain frost. If the temperature falls below 35 degrees F, completed areas shall be protected against any detrimental effects of freezing.

1.8 PLANT, EQUIPMENT, MACHINES, AND TOOLS

1.8.1 General Requirements

Plant, equipment, machines, and tools used in the work shall be subject to approval and shall be maintained in satisfactory working condition at all times. Other compacting equipment may be used in lieu of that specified, where it can be demonstrated that the results are equivalent. The equipment shall be adequate and have the capability of producing the results specified.

1.8.2 Steel-Wheeled Rollers

Steel-wheeled rollers shall be the self-propelled type weighing not less than 20,000 pounds, with a minimum weight of 300 pounds/inch width of rear wheel. Wheels of the rollers shall be equipped with adjustable scrapers. The use of vibratory rollers is optional.

1.8.3 Pneumatic-Tired Rollers

Pneumatic-tired rollers shall be loaded to weigh a minimum of 25,000 pounds and have four or more tires. Tires shall be inflated to a minimum pressure of 60 psi. The loading shall be equally distributed to all wheels, and the tires shall be uniformly inflated. Towing equipment shall also be pneumatic-tired.

1.8.4 Pulverizing Equipment

Pulverizing equipment shall be approved-of before delivery to the site and shall be capable pulverizing existing asphaltic concrete into a 2-inch minus particle size.

1.8.5 Mechanical Spreader

Mechanical spreader shall be self-propelled or attached to a propelling unit capable of moving the spreader and material truck. The device shall be steerable and shall have variable speeds forward and reverse. The spreader and propelling unit shall be carried on tracks, rubber tires, or drum-type steel rollers that will not disturb the underlying material. The spreader shall contain a hopper, an adjustable screed, and outboard bumper rolls and be designed to have a uniform, steady flow of material from the hopper. The spreader shall be capable of laying material without segregation across the full width of the lane to a uniform thickness and to a uniform loose density so that when compacted, the layer or layers shall conform to thickness and grade requirements indicated. The Contracting Officer may require a demonstration of the spreader prior to approving use in performance of the work.

1.8.6 Sprinkling Equipment

Sprinkling equipment shall consist of tank trucks, pressure distributors, or other approved equipment designed to apply controlled quantities of water uniformly over variable widths of surface.

1.8.7 Tampers

Tampers shall be of an approved mechanical type, operated by either pneumatic pressure or internal combustion, and shall have sufficient weight and striking power to produce the compaction required.

1.8.8 Straightedge

The Contractor shall furnish and maintain at the site, in good condition, one 12-foot straightedge for each bituminous paver, for use in the testing of the finished surface. Straightedge shall be made available for Government use. Straightedges shall be constructed of aluminum or other lightweight metal and shall have blades of box or box-girder cross section with flat bottom reinforced to insure rigidity and accuracy. Straightedges shall have handles to facilitate movement on pavement.

1.9 STOCKPILING MATERIALS

Materials, including approved material available from excavation and grading, shall be stockpiled in the manner and at locations designated. Before stockpiling of material, storage sites shall be cleared, and sloped to drain. Materials obtained from different sources shall be stockpiled separately.

1.10 SAMPLING AND TESTING

1.10.1 General Requirements

Testing shall be the responsibility of the Contractor and shall be performed at no additional cost to the Government. Testing shall be performed by an independent commercial testing laboratory that has been inspected by the National Institute of Standards and Technology (NIST) for compliance with ASTM E 329 and ASTM D 3740, as applicable. Testing personnel shall meet the requirements outlined in ASTM D 5255. No work requiring testing will be permitted until the personnel and testing facilities have been approved by the Contracting Officer. The first inspection shall be at the expense of the Government. Costs incurred for any subsequent inspection required because of failure of the facilities to pass the first inspection will be charged to the Contractor. Tests shall be performed as specified herein after to insure that materials and compaction meet specified requirements. Field test information shall be submitted on a "Density Test Log" which shall include but not be limited to the following: test date, test number, feature of work, station/location, offset, elevation, inplace dry unit weight, moisture content, percent compaction, pass or fail, test method, and gradation.

1.10.2 Test Results

Copies of test results shall be furnished to the Contracting Officer within 24 hours of completion of tests. Results shall verify that materials comply with this specification. When a material source is changed, the new material will be tested for compliance. When deficiencies are found, the initial analysis shall be repeated and the material already placed shall be

retested to determine the extent of unacceptable material. All in-place unacceptable material shall be replaced or modified as directed by the Contracting Officer.

1.10.3 Sampling

Aggregate samples for laboratory tests shall be taken in accordance with ASTM D 75.

1.10.4 Field Density with Moisture Content

Field in-place density shall be determined in accordance with ASTM D 1556 or ASTM D 2922. When ASTM D 2922 is used, the calibration curves shall be checked, and adjusted if necessary, using the sand cone method as described in paragraph Calibration of the ASTM publication. ASTM D 2922 results in a wet unit weight of soil, and when using this method, ASTM D 3017 shall be used to determine the moisture content of the soil. The calibration curves furnished with the moisture gauges shall be checked along with density calibration checks as described in ASTM D 3017. If ASTM D 2922 is used, in-place densities shall be checked by ASTM D 1556 and ASTM D 2216 at least once for every 5 nuclear density tests of completed base course. Calibration curves and calibration test results shall be furnished within 24 hours of the conclusion of the tests.

1.10.5 Gradation with Atterberg Limits

Before starting work, at least one sample of material shall be tested in accordance with ASTM C 117, ASTM C 136, and ASTM D 422, as applicable. Sieves shall conform to ASTM E 11. Atterberg limits shall be determined by the test method outlined in ASTM D 4318.

1.10.6 Moisture-Density Relationship

Moisture-density relationships from bulk samples shall be established with the test method outlined in ASTM D 1557, Procedure C.

1.10.7 Degradation Tests

Degradation tests shall be performed on bulk samples in accordance with ASTM C 131.

PART 2 PRODUCTS

2.1 MATERIALS

2.1.1 Aggregates

Aggregates shall consist of crushed stone, crushed gravel, angular sand, or other approved material. Aggregates shall be durable and sound, free from lumps of clay, organic matter, objectionable coatings, and other foreign material. Material retained on a No. 4 sieve shall be known as coarse aggregate and that passing the No. 4 sieve shall be known as binder material.

2.1.1.1 Coarse Aggregate

Only one type of coarse aggregate shall be used on the project. Coarse aggregates, consisting of angular fragments of uniform density and quality, shall have a percentage of wear not to exceed 40 percent after 500

revolutions when tested in accordance with ASTM C 131. The amount of flat and elongated particles shall not exceed 30 percent. A flat particle is one having a ratio of width to thickness greater than 3, and an elongated particle is one having a ratio of length to width greater than 3.

a. Crushed Gravel: Crushed gravel shall be manufactured from gravel particles 50 percent of which by weight are retained on the maximum size gradation sieve specified.

b. Crushed Stone: Crushed stone retained on each sieve specified shall contain the crushed pieces and freshly fractured faces as required under COE CRD-C 171.

2.1.2 Binder Material

Binder material shall consist of screenings, angular sand, or other finely divided mineral matter processed or naturally combined with the coarse aggregate. Liquid-limit and plasticity-index requirements shall apply to any component that is blended to meet the required gradation and shall also apply to the completed course. The portion of any component or of the completed course passing the No. 40 sieve shall be either nonplastic or have a liquid limit not greater than 25 and a plasticity index not greater than 5.

2.1.3 Gradation

Requirements for gradation specified shall apply to the completed base course. The aggregates shall have a 1-inch maximum size and shall be continuously graded within the following limits:

Sieve Designation	Percentage by Weight Passing Square-mesh Sieve (a)(b)(c)
1-inch	100
3/4-inch	87-100
No. 4	30-65
No. 30	5-35
No. 200	0-12

(a) Similar to Class 2 Aggregate Base, 3/4-inch Maximum as specified in Section 26 of the State of California Department of Transportation *Standard Specifications*.

(b) The values are based on aggregates of uniform specific gravity, and the percentages passing the various sieves are subject to appropriate correction in accordance with ASTM C 127 and ASTM C 128 when aggregates of varying specific gravities are used.

2.1.4 Pulverized Asphalt Concrete

Inplace pulverized asphaltic concrete shall have a 2-inch minus particle size.

PART 3 EXECUTION

3.1 GENERAL REQUIREMENTS

When the base is constructed in more than one layer, the previously constructed layer shall be cleaned of loose and foreign matter by sweeping

with power sweepers or power brooms, except that hand brooms may be used in areas where power cleaning is not practicable. Adequate drainage shall be provided during the entire period of construction to prevent water from collecting or standing on the working area. Line and grade stakes shall be provided as necessary for control. Grade stakes shall be in lines parallel to the centerline of the area under construction and suitably spaced for string lining.

3.2 OPERATION OF AGGREGATE SOURCES

Aggregates shall be obtained from off-site sources.

3.3 PREPARATION OF UNDERLYING COURSE

3.3.1 General Requirements

Before constructing aggregate base course, the previously constructed underlying course shall be cleaned of foreign substances. Surface of underlying course shall meet the specified compaction and surface tolerances. Subgrade shall conform to Section 02300 EARTHWORK. Bituminous-stabilized subbases shall conform to Section 02710 BITUMINOUS-STABILIZED BASE OR SUBBASE COURSE. Portland cement-stabilized subbases shall conform to Section 02711 PORTLAND CEMENT-STABILIZED BASE OR SUBBASE COURSES. Lime-stabilized subgrades shall conform to Section 02712 LIME-STABILIZED SUBGRADES. Chemically-stabilized and sealed subgrades shall conform to Section 02715 CHEMICALLY-STABILIZED AND SEALED SUBGRADES. Subbase course shall conform to Section 02721 SUBBASE COURSES. Ruts or soft, yielding spots that may appear in the underlying course, areas having inadequate compaction, and deviations of the surface from requirements specified shall be corrected at no additional cost to the Government. For cohesionless underlying materials containing sands, sand gravels, or any other cohesionless material in harmful quantities, the surface shall be mechanically stabilized with aggregate prior to placement of the aggregate base course. Stabilization may be accomplished by mixing base course material into the underlying course and compacting by approved methods. Properly compacted material will be considered as part of the underlying course and shall meet all requirements for the underlying course. Finished underlying course shall not be disturbed by traffic or other operations and shall be maintained in a satisfactory condition until base course is placed.

3.3.2 Grade Control

Underlying material shall be excavated to sufficient depth for the required base course thickness so that the finished base course with the subsequent surface course will meet the fixed grade. Finished and completed area shall conform to the lines, grades, cross section, and dimensions indicated.

3.4 INSTALLATION

3.4.1 Mixing and Placing

Materials shall be mixed by the stationary plant, traveling plant, or road mix method and placed or pulverized in such a manner as to obtain uniformity of the aggregate base course material and at a uniform optimum water content for compaction. The Contractor shall make such adjustments in mixing, pulverizing, or placing procedures or in equipment to obtain the true grades, to minimize segregation and degradation, to reduce or accelerate loss or increase of water, and to ensure a satisfactory base course.

3.4.2 Edges of Base Course

Approved material shall be placed along edges of aggregate base course in such quantities as will compact to thickness of the course being constructed, or to the thickness of each layer in a multiple layer course, allowing in each operation at least a 1-foot width of the shoulder to be rolled and compacted simultaneously with rolling and compacting of each layer of base course.

3.4.3 Compaction

Each layer of aggregate base course or pulverized asphaltic concrete, including shoulders, shall be compacted. Water content shall be maintained at optimum. Density of compacted mixture shall be at least 100 percent of laboratory maximum dry density. Rolling shall begin at the outside edge of the surface and proceed to the center, overlapping on successive trips at least one-half the width of the roller. Alternate trips of the roller shall be slightly different lengths. Speed of the roller shall be such that displacement of the aggregate does not occur. Areas inaccessible to the rollers shall be compacted with mechanical tampers, and shall be shaped and finished by hand methods.

3.4.4 Layer Thickness

Compacted thickness of the aggregate course shall be as indicated. No layer shall be in excess of 6 inches nor less than 3 inches in compacted thickness.

3.4.5 Finishing

The surface of the top layer shall be finished to grade and cross section shown. Finished surface shall be of uniform texture. Light blading during compaction may be necessary for the finished surface to conform to the lines, grades, and cross sections. Should the surface for any reason become rough, corrugated, uneven in texture, or traffic marked prior to completion, such unsatisfactory portion shall be scarified, reworked, recompacted, or replaced as directed.

3.4.5.1 Smoothness

Surface of each layer shall show no deviations in excess of 3/8 inch when tested with the 12-foot straightedge. Deviations exceeding this amount shall be corrected by removing material and replacing with new material, or by reworking existing material and compacting, as directed.

3.4.5.2 Thickness Control

Compacted thickness of the base course shall be within l/2 inch of the thickness indicated. Where the measured thickness is more than l/2 inch deficient, such areas shall be corrected by scarifying, adding new material of proper gradation, reblading, and recompacting as directed. Where the measured thickness is more than l/2 inch thicker than indicated, the course shall be considered as conforming to the specified thickness requirements. Average job thickness shall be the average of all thickness measurements taken for the job, but shall be within l/4 inch of the thickness indicated. No additional compensation shall be forthcoming for average job thicknesses in excess of l/4 inch of the thickness indicated.

3.5 FIELD QUALITY CONTROL

Field quality control testing shall conform to the requirements of CESPK PAM 415-1-2.

3.5.1 Field Density With Moisture Content

Perform two field density tests with moisture contents for each increment or fraction of 1000 square yards placed during each 8 hour shift.

3.5.2 Gradation With Atterberg Limits

Before starting work, at least one sample of material shall be tested for gradation and Atterberg limit compliance. After the initial test, perform two sets of tests, on compacted material, for every 5 field density tests.

3.5.3 Moisture-Density Relationship

Perform one moisture-density relationship test for every 5 field density tests (with not less than 1 test for each type of material).

3.5.4 Degradation Tests

One degradation test shall be run for every five field density tests (with not less than 1 test for each type of material).

3.5.5 Smoothness

Measurements for deviation from grade and cross section shown shall be taken in successive positions parallel to the road centerline with a 12-foot straightedge. Measurements shall also be taken perpendicular to the road centerline at 50 foot intervals.

3.5.6 Thickness

Thickness of the base course shall be measured at intervals in such a manner as to ensure one measurement for each 250 square yards of base course. Measurements shall be made by taking differential elevations at preselected locations between the subgrade and the top of the completed base course. Locations and subgrade elevations shall be delivered to the Contracting Officer prior to base course placement. Locations and top of base course elevations shall be delivered to the Contracting Officer within 24 hours of base course completion.

3.6 TRAFFIC

Completed portions of the area may be opened to traffic, provided there is no marring or distorting of the surface by the traffic. Heavy equipment shall not be permitted except when necessary to construction, and then the area shall be protected against marring or damage to the completed work.

3.7 MAINTENANCE

The aggregate base course shall be maintained in a satisfactory condition until accepted. Maintenance shall include immediate repairs to any defects and shall be repeated as often as necessary to keep the area intact.

3.8 DISPOSAL OF UNSATISFACTORY MATERIALS

Removed in-place materials that are unsuitable for the base course material that is removed for the required correction of defective areas, and waste material and debris shall be disposed of as directed.

3.9 CONSTRUCTION QUALITY CONTROL

Attention is directed to the applicable sections which requires the Contractor to perform quality control inspection, testing, and reporting.

-- End of Section --

SECTION TABLE OF CONTENTS

DIVISION 02 - SITE WORK

SECTION 02740

RUBBERIZED ASPHALT CONCRETE - WET PROCESS

PART 1 GENERAL

1.1 PROCESS DESCRIPTION
1.2 REFERENCES
1.3 UNIT PRICES
1.3.1 Measurement
1.3.2 Payment
1.4 SUBMITTALS
1.5 PLANT, EQUIPMENT, MACHINES, AND TOOLS
1.5.1 Asphalt Heating Tank
1.5.2 Blender Equipment
1.5.3 Storage/Reaction Tank
1.5.4 Viscometers
1.6 DELIVERY, STORAGE, AND HANDLING OF MATERIALS

PART 2 PRODUCTS

2.1 MATERIALS
2.1.1 Aggregate
2.1.1.1 Coarse Aggregates
2.1.1.2 Aggregate gradation
2.1.2 Paving Asphalt
2.1.3 Asphalt Modifier
2.1.4 Crumb Rubber Modifier (CRM)
2.1.4.1 CRM Gradations
2.2 COMPOSITION & GRADING
2.3 MIXING
2.3.1 Hand Held Viscometer Test
2.3.1.1 Precautions
2.3.1.2 Apparatus
2.3.1.3 Calibration
2.3.1.4 Test Procedure
2.4 MIX DESIGNS AND CERTIFICATIONS
2.5 MISCELLANEOUS REQUIREMENT

PART 3 EXECUTION

3.1 RUBBERIZED ASPHALT CONCRETE - HOT MIX (RACHM)
3.1.1 Mixing Binder With Aggregate
3.1.2 Distribution and Spreading
3.1.3 Rolling
3.1.4 Rock Dust Blotter

-- End of Section Table of Contents --

SECTION 02740

RUBBERIZED ASPHALT CONCRETE - WET PROCESS

PART 1 GENERAL

1.1 PROCESS DESCRIPTION

Rubberized Asphalt Concrete is a mixture of crumb rubber from scrap tires, paving asphalt, asphalt modifier and aggregate. Two methods are used to add crumb rubber to asphalt concrete: The Wet Process and Dry Process.

THE WET PROCESS requires special equipment to blend the crumb rubber with the asphalt prior to mixing it with the aggregate. This is currently the only process permitted by the Caltrans specification and by the Greenbook. In California, the Wet Process is the most common method used to add crumb rubber to asphalt concrete.

THE DRY PROCESS mixes the rubber particles with the aggregates prior to the addition of the asphalt without having to use the special equipment required by The Wet Process.

1.2 REFERENCES

The publications listed below form a part of this specification to the extent referenced. The publications are referred to in the text by basic designation only.

AMERICAN SOCIETY FOR TESTING AND MATERIALS (ASTM)

ASTM C 88	(1990) Soundness of Aggregates by Use of Sodium Sulfate or Magnesium Sulfate
ASTM C 131	(1996) Resistance to Degradation of Small-Sized Course Aggregate by Abrasion and Impact in the Los Angeles Machine
ASTM C 136	(1996a) Sieve Analysis of Fine and Coarse Aggregates
ASTM D 5	(1995) Penetration of Bituminous Materials
ASTM D 36	(1995) Standard Test Method for Softening Point of Bitumen (Ring-and-Ball Apparatus)
ASTM D 92	(1998a) Standard Test Method for Flash and Fire Points by Cleveland Open Cup
ASTM D 217	(1997) Standard Test Methods for Cone Penetration of Lubricating Grease
ASTM D 297	(1993; R 1998) Standard Test Methods for Rubber Products-Chemical Analysis
ASTM D 445	(1997) Standard Test Method for Kinematic

	Viscosity of Transparent and Opaque Liquids (the Calculation of Dynamic Viscosity)
ASTM D 2007	(1998) Standard Test Method for Characteristic Groups in Rubber Extender and Processing Oils and Other Petroleum-Derived Oils by the Clay-Gel Absorption Chromatographic Method
ASTM D 2240	(1997; e1) Standard Test Method for Rubber Property-Durometer Hardness
ASTM D 3381	(1992) Viscosity-Graded Asphalt Cement for Use in Pavement Construction
ASTM D 3407	(1978; R 1994; e1) Standard Test Methods for Joint Sealants, Hot-Poured, for Concrete and Asphalt Pavements

STATE OF CALIFORNIA, DEPARTMENT OF TRANSPORTATION (CALTRANS), STANDARD SPECIFICATION (SS)

CALTRANS SS SECTION 9	(1995) Section 9, Measurement and Payment
CALTRANS SS SECTION 39	(1995) Section 39, Asphalt Concrete

1.3 UNIT PRICES

1.3.1 Measurement

The amount paid for will be the number of square yards of 2-inch thick rubberized asphalt concrete placed in the accepted work.

1.3.2 Payment

Quantities of rubberized asphalt concrete placed, determined as specified above, will be paid for at the base year contract unit price for Line items 0001AP, "RUBBERIZED ASPHALT PAVEMENT 2"" and 0001AQ, "EACH ADDITIONAL INCH RUBBERIZED ASPHALT". Payment shall constitute full compensation for furnishing all materials, equipment, plant, and tools; and for labor and other incidentals necessary to complete work required.

1.4 SUBMITTALS

Government approval is required for submittals with a "GA" designation; submittals having an "FIO" designation are for information only. The following shall be submitted in accordance with Section 01330 SUBMITTAL PROCEDURES:

SD-09 Reports

Aggregates; GA. QC Monitoring; GA.

Aggregate and QC test results.

SD-13 Certificates

Asphalt Cement Binder; GA. Asphalt Modifier; GA. Crumb Rubber Modifier (CRM); GA.

Copies of certified test data.

Testing Laboratory; GA.

Certification of compliance.

Plant and Plant Scale Calibration Certifications

SD-18 Records

Mix Design; GA.

Proposed JMF.

Contractor Quality Control; GA.

Quality control plan.

Material Acceptance; GA

Acceptance test results

1.5 PLANT, EQUIPMENT, MACHINES, AND TOOLS

The Contractor shall utilize the following equipment for production of asphalt-rubber binder:

1.5.1 Asphalt Heating Tank

An asphalt heating tank equipped to heat and maintain the blended paving asphalt and asphalt modifier mixture at the necessary temperature before blending with the CRM. This unit shall be equipped with a thermostatic heat control device and a temperature reading device and shall be accurate to within ±5°F and shall be of the recording type.

1.5.2 Blender Equipment

A mechanical mixer for the complete, homogeneous blending of paving asphalt, asphalt modifier, and CRM. Paving asphalt and asphalt modifier shall be introduced into the mixer through meters conforming to the requirements of CALTRANS SS SECTION 9, paragraph 9-1.01, "Measurement of Quantities". The blending system shall be capable of varying the rate of delivery of paving asphalt and asphalt modifier proportionate with the delivery of CRM. During the proportioning and blending of the liquid ingredients, the temperature of paving asphalt and the asphalt modifier shall not vary more than ±25°F. The paving asphalt feed, the asphalt modifier feed and CRM feed, shall be equipped with devices by which the rate of feed can be determined during the proportioning operation. Meters used for proportioning individual ingredients shall be equipped with rate-of-flow indicators to show the rates of delivery and resettable totalizers so that the total amounts of liquid ingredients introduced into the mixture can be determined. The liquid and dry ingredients shall be fed directly into the mixer at a uniform and controlled rate. The rate of feed to the mixer shall not exceed that which will permit complete mixing of the materials. Dead areas in the mixer, in which the material does not move or is not sufficiently agitated, shall be corrected by a reduction in the

volume of material or by other adjustments. Mixing shall continue until a homogeneous mixture of uniformly distributed and properly blended asphalt-rubber binder of unchanging appearance and consistency is produced. The Contractor shall provide a safe sampling device capable of delivering a representative sample of the completed asphalt-rubber binder of sufficient size to permit the required tests.

1.5.3 Storage/Reaction Tank

An asphalt-rubber binder storage/reaction tank equipped with a heating system that is equipped with a temperature reading device to maintain the proper temperature of the asphalt-rubber binder and an internal mixing unit capable of maintaining a homogeneous mixture of paving asphalt, asphalt modifier and CRM.

1.5.4 Viscometers

The Contractor shall supply a Haake Viscometer per "2.3.1 Hand Held Viscometer Test" (or equivalent) for use by the Contracting Officer to verify the viscosity of the asphalt-rubber on all projects where a field laboratory is used. All asphalt concrete plants are required to have a field laboratory for use by the Contracting Officer. The equipment shall be approved by the Contracting Officer prior to use.

1.6 DELIVERY, STORAGE, AND HANDLING OF MATERIALS

Asphalt concrete materials shall be stored only in silos. The minimum quantity of asphalt concrete in any one silo during mixing shall be 18 tons except for period immediately following a shutdown of the plant of 2 hours or more. A means shall be provided to indicate that storage in each silo is being maintained as required.

Storage silos shall be equipped with a surge-batcher sized to hold a minimum of 4,000 pounds of material. A surge-batcher consists of equipment placed at the top of the storage silo which catches the continuous delivery of the completed mix and changes it to individual batch delivery and prevents the segregation of product ingredients as the completed mix is placed into storage. The surge-batcher shall be center loading and shall be thermally insulated or heated or thermally insulated and heated to prevent material buildup. Rotary chutes shall not be used as surge-batchers.

The surge-batcher shall be independent and distinct from conveyors or chutes used to collect or direct the completed mixture being discharged into storage silos and shall be the last device to handle the material before it enters the silo. Multiple storage silos shall be served by an individual surge-batcher for each silo. Material handling shall be free of oblique movement between the highest elevation (conveyor outfall) and subsequent placement in the silo. Discharge gates on surge-batchers shall be automatic in operation and shall discharge only after a minimum of 4,000 pounds of material has been collected and shall close before the last collected material leaves the device. Discharge gate design shall prevent the deflection of material during the opening and closing operation.

PART 2 PRODUCTS

2.1 MATERIALS

2.1.1 Aggregate

The aggregate for RACHM shall meet the quality requirements for asphalt concrete. Aggregates shall have a satisfactory service record in bituminous pavement construction, and the source selected shall be approved by the Contracting Officer.

2.1.1.1 Coarse Aggregates

Coarse aggregate shall consist of clean, sound, durable particles meeting the following requirements:

a. Loss not greater that 40 percent after 500 revolutions when tested in accordance with ASTM C 131.

b. Loss not greater than 12 percent after five cycles of testing in accordance with ASTM C 88, using sodium sulfate.

c. At least 50 percent by weight of aggregates retained on the No. 4 sieve shall have at minimum two fractured faces, with the area of each face equal to at least 75 percent of the smallest midsectional area of piece. When two fractures are contiguous, the angle between planes of fractures shall be at least 30 degrees to count as two fractured faces.

2.1.1.2 Aggregate gradation

The aggregate for RACHM shall meet the quality requirements for asphalt concrete. Either of the following two gradations may be used. The aggregate gradations as determined by ASTM C 136 shall be within the limits shown.

Sieve Designation	Percent by Weight Passing Square-mesh Sieve (a)
1-inch	100
3/4-inch	95-100
3/8-inch	65-80
No. 4	44-59
No. 8	31-45
No. 30	13-26
No. 200	3-8

(a) Similar to the California Gradation for 3/4-inch Maximum, Medium per CALTRANS SS SECTION 39.

Sieve Designation	Percent by Weight Passing Square-mesh Sieve (b)
3/4-inch	100
1/2-inch	95-100
3/8-inch	80-95
No. 4	54-71
No. 8	38-54
No. 30	17-32
No. 200	3-8

(b) Similar to the California Gradation for 1/2-inch maximum, medium per CALTRANS SS SECTION 39.

2.1.2 Paving Asphalt

Paving asphalt to be used in the asphalt-rubber binder shall conform to ASTM D 3381, Viscosity-Graded Asphalt Cement for Use in Pavement Construction as listed in Table of the ASTM D 3381, Requirements for Asphalt Cement Viscosity-Graded at 140 degrees F. Paving asphalt viscosity grade shall be **AR-4000**. Certified results of tests conducted in accordance with ASTM D 5 shall be submitted in advance of any paving, showing the penetration at 77 degrees F for the AR grades of asphalt that will actually be used in the paving mix of this project. In addition, the penetration range at 77 degrees F shall be 25. The paving asphalt for use in asphalt-rubber binder shall be modified with an asphalt modifier

2.1.3 Asphalt Modifier

The asphalt modifier will be a resinous, high flash point, aromatic hydrocarbon compound and shall conform to the requirements in Table 2.1.2.

Table 2.1.3
REQUIREMENTS FOR ASPHALT MODIFIER

Property	Test Method	Value
Flash Point, COC °F	ASTM D 92	405 min.
Viscosity, cSt @ 212°F	ASTM D 445	X ±3*
Molecular Analysis		
Asphaltenes, percent by weight	ASTM D 2007	0.1 max
Aromatics, percent by weight	ASTM D 2007	55 min

* The symbol "X" is the viscosity of the asphalt modifier the Contractor proposes to furnish. The value "X" which the Contractor proposes shall be between the limits of 19 and 36 and shall be submitted in writing to the Contracting Officer. Any proposed change requested by the Contractor in the value "X" shall require a new asphalt-rubber binder design.

The asphalt modifier shall be proportionately added to the paving asphalt at the production site where the asphalt-rubber binder is blended and reacted. Asphalt modifier shall be added at an amount of 2.5 to 6-0 percent by weight of the paving asphalt based on the recommendation of the asphalt-rubber binder supplier. The exact amount will be determined by the Contracting Officer, The paving asphalt shall be at a temperature of not less than 375 deg. F. nor more than 440 deg. F. when the asphalt modifier is added. If the asphalt modifier is combined with the paving asphalt, before being blended with the CRM, the combined paving asphalt and asphalt modifier shall be mixed by circulation for a period of not less than 20 minutes. This premixing of asphalt modifier and the paving asphalt will not be required when all ingredients of the asphalt-rubber binder are proportioned and mixed simultaneously. Asphalt modifier and paving asphalt shall be measured for proportioning with meters conforming to the requirements of CALTRANS SS SECTION 9, paragraph 9-1.01, "Measurement of Quantities".

2.1.4 Crumb Rubber Modifier (CRM)

The material shall consist of a combination of scrap tire CRM and high natural CRM. Scrap tire CRM shall consist of ground or granulated rubber derived from any combination of automobile tires, truck tires or tire

buffs. The high natural CRM shall consist of ground or granulated rubber derived from materials that utilize high natural rubber sources. The high natural CRM may consist of blended CRM.

CRM shall be ground or granulated at ambient temperature. Cryogenically produced CRM particles which can pass through the grinder or granulator without being ground or granulated shall not be used. Cryogenic separation, if utilized, shall be performed separately from and prior to grinding or granulating. Steel and fiber separation may employ any method CRM shall not contain more than 0.01 percent of wire by weight and shall be free of all other contaminants, except fabric. Fabric shall not exceed 0.05 percent by weight of CRM. A Certificate of Compliance certifying these percentages shall be furnished to the Contracting Officer.

CRM shall be dry and free-flowing and not produce foaming when combined with the blended paving asphalt and asphalt modifier mixture. Calcium carbonate or talc may be added up to a maximum of 3 percent by weight of CRM to prevent CRM particles from sticking together. The CRM shall have a specific gravity range from 1.1 minimum to 1.2 maximum as determined by ASTM D 297. Scrap tire CRM and high natural CRM shall be delivered to the production site in separate bags and shall be sampled and tested separately. Scrap tire CRM material shall conform to the following chemical analysis in Table 2.1.3A.

Table 2.1.4A
CHEMICAL REQUIREMENTS FOR SCRAP TIRE CRM

Test	Test Method	Minimum	Maximum
Acetone Extract	ASTM D 297	6.0%	16.0%
Ash Content	ASTM D 297	-	8.0%
Carbon Black Content	ASTM D 297	28.0%	38.0%
Rubber Hydrocarbon	ASTM D 297	42.0%	65.0%
Natural Rubber Content	ASTM D 297	22.0%	39.0%

The scrap tire CRM described above shall be mixed at the job site with high natural CRM so that 75% ±2% of the product used is derived from scrap tires and 25% ±2% from materials that utilize high natural rubber sources . The high natural rubber CRM may consist of blended CRM which, after blending, conforms to the following chemical analysis in Table 2.1.3B

Table 2.1.4B
CHEMICAL REQUIREMENTS FOR HIGH NATURAL CRM

Test	Test Method	Minimum	Maximum
Acetone Extract	ASTM D 297	4.0%	16.0%
Rubber Hydrocarbon	ASTM D 297	50.0%	---
Natural Rubber Content	ASTM D 297	40.0%	48.0%

With the approval of the Contracting Officer, the High Natural Rubber per para. 2.1.3 and the Asphalt Modifier per para. 2.1.2 may be eliminated. If High Natural Rubber is not used, then the full amount of required CRM shall be Scrap Tire CRM per Table 2A. Asphalt Rubber binder without natural rubber shall be designated as Type I and RACHM manufactured with with Type I binder shall be designated as RACHM-I.

2.1.4.1 CRM Gradations

CRM gradations shall conform to the requirements of Table 2.1.4.1 when

tested in accordance with the requirements of ASTM C 136, amended as follows:

Split or quarter 100 grams ±5 grams from the representative CRM sample and dry to a constant weight at a temperature of not less than 135°F nor more than 145°F and record the dry sample weight. Place the CRM sample and 0.176 ounces of talc (or calcium carbonate) in a 1 pint jar. Seal the jar and shake it by hand for a minimum of one minute to mix the CRM and the talc (or calcium carbonate). Continue shaking or open the jar and stir until particle agglomerates and clumps are broken and the talc (or calcium carbonate) is uniformly mixed.

A Rotap (or equivalent) test shaker shall be used for the sieve analysis. Place one rubber ball on each sieve. Each ball shall have a weight of 0.3 ±0.017 ounces, have a diameter of 1 ±0.02 inch, and shall have a Shore Durometer "A" hardness of 2 ±0.02 inches in accordance with the requirements in ASTM D 2240. After sieving the combined material for 10 minutes ±1 minute, disassemble the sieves. Any material adhering to the bottom of a sieve shall be brushed into the next finer sieve. Weigh and record the weight of the material retained on the No. 8 sieve and leave this material (do not discard) on the scale or balance. Any observed fabric balls shall remain on the scale or balance and shall be placed together on the side of the scale or balance to prevent the fabric balls from being covered or disturbed when placing the material from finer sieves onto the scale or balance. The material retained on the next finer sieve () No. 10 sieve) shall be added to the scale or balance. Weigh and record that weight as the accumulative weight retained on that sieve ()No. 10 sieve). Continue weighing and recording the accumulated weight retained on the remaining sieves until the accumulated weight retained in the pan has been determined. Prior to discarding the CRM sample, separately weigh and record the total weight of fabric balls in the sample.

Determine the weight of material passing the No. 200 sieve (or weight retained in the pan) by subtracting the accumulated weight retained on the No. 200 sieve from the accumulated weight retained in the pan. If the material passing the No. 200 sieve (or weight retained in the pan) has a weight of 0.176 ounces or less, cross out the recorded number for the accumulated weight retained in the pan and copy the number recorded for the accumulated weight retained on the No. 200 sieve and record that number (next to the crossed out number) as the accumulated weight retained in the pan. If the material passing the No. 200 sieve (or weight retained in the pan) has a weight greater than 0.176 ounces, cross out the recorded number for the accumulated weight retained in the pan, subtract 0.176 ounces from that number and record the difference next to the crossed out number. The adjustment to the accumulated weight retained in the pan is made to account for the 0.176 ounces of talc (or calcium carbonate) added to the sample. For calculation purposes, the adjusted total sample weight is the same as the adjusted accumulated weight retained in the pan. Determine the percent passing based on the adjusted total sample weight and record to the nearest 0.1 percent.

Table 2.1.4.1
GRADING REQUIREMENTS FOR CRM

Sieve Size	Scrap Tire CRM percent passing	High Natural CRM percent passing
No. 8	100	100

Table 2.1.4.1
GRADING REQUIREMENTS FOR CRM

No. 10	98-100	100
No. 16	45-75	95-100
No. 30	2-20	35-85
No. 50	0-6	10-30
No. 100	0-2	0-4
No. 200	---	0-1

* CRM from more than one source may be used provided the combined CRM gradation meets the specified limits. No particles shall exceed a length of 3/16 inch as measured on any axis.

2.2 COMPOSITION & GRADING

Asphalt-rubber hot-mix -gap-graded (RACHM-GG) will be designated by class, i.e., RACHM-GG-C, and shall conform to the requirements of this Section and Table 2.2A.

Table 2.2A
REQUIREMENTS FOR RACHM-GG

Sieve Size	CLASS RACHM-GG-B Min. - Max.	RACHM-GG-C Min. - Max.	RACHM-GG-C Min. - Max.
1 inch	100	---	---
3/4 inch	90-100	100	---
1/2 inch	---	90-100	100
3/8 inch	60-75	78-92	78-92
No. 4	28-42	28-42	28-42
No. 8	15-25	15-25	15-25
No. 30	5-15	5-15	5-15
No. 200	0-5	0-5	0-5
% Asphalt Rubber Binder by Weight of Dry Aggregate*	7.5-8.4	7.5-8.7	7.5-8.7
Air Voids % Calif. Test 367	3-6	3-6	3 -6
Stabilometer Value Min. California Test 304 and 366	25	23	23
Voids in Mineral Agg. Percent Min.	18	18	18

* Once the percent asphalt rubber binder is determined by the mix design, the production tolerance shall be ±0.5 % as determined by California Test Method 362, 379, or 382.

2.3 MIXING

Mixing of the asphalt and CRM shall be accomplished as specified herein.

The paving asphalt and asphalt modifier shall be combined into a blended mixture that is chemically compatible with the crumb rubber modifier to be used. The blended mixture is considered to be chemically compatible when it meets the requirements for asphalt rubber binder (after reacting) found in Table 2.3A

The asphalt modifier shall be proportionately added to the paving asphalt at the production site where the asphalt rubber binder is blended and reacted. Asphalt modifier shall be added at an amount of 2.5% to 6.0% by weight of the paving asphalt based on the recommendation of the asphalt rubber binder supplier. The paving asphalt shall be at a temperature of not less than 375°F nor more than 440°F when the asphalt modifier is added. If the asphalt modifier is combined with the paving asphalt before being blended with the CRM, the combined paving asphalt and asphalt modifier shall be mixed by circulation for a period of not less than 20 minutes. This premixing of asphalt modifier and the paving asphalt will not be required when all ingredients of the asphalt rubber binder are proportioned and mixed simultaneously. Asphalt modifier and paving asphalt shall be measured for proportioning conforming to the requirements of asphalt plant proportioning.

The proportions of the materials, by total weight of asphalt-rubber binder, shall be 80% ±2% combined paving asphalt and asphalt modifier, and 20 % ±2% CRM. However, the minimum amount of CRM shall not be less than 18 %. The temperature of the blended asphalt and modifier shall be between 375°F minimum and 440°F maximum when the CRM is added. The temperature shall not exceed 10°F below the actual flash point of the mixture. The CRM shall be combined and mixed together in an asphalt-rubber mechanical blender meeting the requirements of paragraph "2.4 EQUIPMENT FOR PRODUCTION OF ASPHALT-RUBBER". The combined asphalt and CRM shall be pumped into a storage/reaction tank or distributor truck meeting the requirements of paragraph "2.4 EQUIPMENT FOR PRODUCTION OF ASPHALT-RUBBER". The required mixing/reaction time shall be 45 minutes minimum. The temperature of the asphalt-rubber mixture shall be between 375°F minimum and 440°F maximum during the reaction period. After reacting, the asphalt rubber binder shall conform to the requirements in Table 2.3A

Table 2.3A
REQUIREMENTS FOR ASPHALT RUBBER BINDER

Test Parameter	Test Method	Specification Limit Minimum	Specification Limit Maximum
Haake Field Viscosity @ 375°F, (Centipoise)	See 2.3.1	1500	4000
Cone Penetration @ 77°F	ASTM D 217	25	70
Resilient @ 77°F, % Rebound	ASTM D 3407	18	--
Field Softening Point, °F	ASTM D 36	125	165

Table 2.3A
REQUIREMENTS FOR ASPHALT RUBBER BINDER

The reacted asphalt rubber binder shall be maintained at a temperature of not less than 375°F nor more than 425°F. If any of the material in a batch of asphalt rubber binder is not used within 4 hours after the 45-minute reaction period, heating of the material shall be discontinued. Any time the asphalt rubber binder cools below 375°F, and is then reheated, shall be considered a reheat cycle. The total number of reheat cycles shall not exceed 2. The material shall be uniformly reheated to a temperature of not less than 375°F nor more than 425°F prior to use. Additional scrap tire CRM meeting the requirements of paragraph "2.1.3 Crumb Rubber Modifier (CRM)" may be added to the reheated binder and reacted for a minimum of 45 minutes. The cumulative amount of additional scrap tire CRM shall not exceed 10 percent of the total binder weight. Reheated asphalt rubber binder shall conform to the requirements in Table 2.3A

When permitted by the Contracting Officer, asphalt-rubber binder produced on another agency's project and defined here as "hold over material", may be used on the project if the initial agency certifies the following:

a. The total tons and type of material being held over.

b. The amount of CRM contained within the holdover load on a percentage basis.

c. The grade of paving asphalt and asphalt modifier used and its source.

d. Date of original mixing.

e. Number of reheat cycles.

In no case, will more than 20 tons of holdover material be allowed to be transferred from one project to another. In all cases, the holdover material when blended with new asphalt-rubber binder, shall conform to the requirements in Table 2.3A.

2.3.1 Hand Held Viscometer Test

The Hand Held Viscometer Test shall be conducted as follows:

2.3.1.1 Precautions

This test method may involve hazardous materials, operations and equipment. This test method does not purport to address all the safety issues associated with its use. It is the responsibility of the user of this test method to establish appropriate safety and health practices and determine the applicability of regulatory limitations prior to use.

2.3.1.2 Apparatus

a. Viscometer: Haake Model VT-02 rotational viscometer or equivalent

b. Spindle: Rotor No.1, diameter 1 inch +/- 0.004 inch, height 2.09 inch +/- 0.004 inch or equivalent

c. Thermometer: digital with metal-jacketed probe, 1°F precision

d. Sample Container: 1 gallon metal can with wire bale

e. Standard Fluids: per fluid manufacturer recommendations calibrate viscometer in absolute viscosity (centipoise).

2.3.1.3 Calibration

The viscometer shall be calibrated per manufacturer recommendations. The accuracy of the viscometer shall be verified by comparing the viscosity results obtained with the hand held viscometer to 3 separate calibration fluids of known viscosity ranging from 1000 to 5000 centipoise. The viscometer will be considered accurate if the values obtained are within 300 centipoise of the known viscosity. The known viscosity value shall be based on the fluid manufacturer standard test temperature or the test temperature versus viscosity correlation table provided by the fluid manufacturer. The viscometer calibration may be performed at an offsite laboratory and Certificate of Compliance verifying the calibration shall be provided to the Contracting Officer

2.3.1.4 Test Procedure

a. Obtain a representative sample of asphalt rubber binder from an appropriate sample valve during production. Prior to sampling, run a one-gallon sample of binder through the sampling valve and discard the sample. Place a clean one-gallon sample can under the sampling valve and fill the container to approximately 85% full.

b. Transport the sample immediately to the testing location. The testing location should be reasonably close to the sampling location to avoid undue temperature loss. The temperature of the binder prior to sampling should be a minimum of 375°F. The sample container shall then be placed on a smooth, level support for testing.

c. The binder shall be continuously stirred using an appropriate metal stirring rod. Use of the temperature probe is permitted. Insert the temperature probe into the binder and check the temperature. Stirring shall continue until the binder reaches a temperature of 375°F +/- 5°F.

d. The viscometer spindle shall be cleaned in a suitable solvent and free of any binder material prior to test. While holding the viscometer over the sample container insert the spindle of the viscometer into the sample container near the side of the container and turn the viscometer on. While the spindle is rotating, move the spindle in and out of the binder three times to bring the spindle up the temperature of the binder. Continue stirring the binder.

e. Determine the viscosity of the binder at 375°F +/- 5°F as follows. In one continuous operation, remove the spindle from the binder (after heating), discontinue stirring the binder and immediately insert the spindle back into the center of the binder sample. While holding the viscometer level watch the needle on the viscometer dial and record the maximum value obtained on the dial. Record the test temperature and the maximum viscosity. Subtract 100 centipoise from the maximum value recorded and report this as the viscosity of the asphalt rubber binder. (The viscometer shall be maintained and operated in accordance with the instructions from the manufacturer. However, this test method shall apply if

there are any differences in the instructions for determination of the viscosity.

f. Report the following information for the viscosity test; technician performing viscometer test, date and location of plant, asphalt rubber binder supplier, binder test temperature and viscosity, spindle size and rotating speed in revolutions per minute, viscometer model and serial number.

2.4 MIX DESIGNS AND CERTIFICATIONS

The optimum binder content for RACHM-GG mixes shall be determined by California Test Method 367 except that Step 2 regarding surface flushing shall not be used. Optimum binder content shall be determined by using a void content between 3 percent minimum to 6 percent maximum as approved by the Contracting Officer. Compaction shall be in accordance with California Test Method 304 except for the following:

Mixing Temperatures:
Asphalt-rubber = 325 °F - 360 °F
Aggregate = 290 °F - 325 °F
Compaction Temperature = 90 °F-300 °F.

In addition to the formulations and certifications required in paragraphs "2.2 COMPOSITION & GRADING and 2.3 MIXING" for asphalt-rubber, the Contractor shall furnish to the Contracting Officer a mix design and samples of all materials to be used at least 30 working days before construction is scheduled to begin. The mix design and certifications shall include, but are not limited to, the following:

a. Combined aggregate gradation.
b. Individual bin gradations (hot for batch, cold for drum plant).
c. Percentage of each bin.
d. Asphalt rubber binder content.
e. Density.
f. Air Voids.
g. Voids in Mineral Aggregates (VMA).
h. Stability.
i. Aggregate source
j. Asphalt binder source

2.5 MISCELLANEOUS REQUIREMENT

Miscellaneous requirements shall conform to 203-6.8 except that the temperature of the asphalt-rubber binder shall be 375 °F minimum to 425 °F maximum for asphalt-rubber when added to the aggregate. The temperature of the aggregate at the time of adding the asphalt-rubber binder shall be 300 °F minimum to 330 °F maximum.

PART 3 EXECUTION

3.1 RUBBERIZED ASPHALT CONCRETE - HOT MIX (RACHM)

3.1.1 Mixing Binder With Aggregate

Mixing of the Asphalt Rubber binder with aggregate shall conform to 203-6.6 except that temperature requirements of RACHM shall supercede the requirements in 203-6.6.

3.1.2 Distribution and Spreading

Distribution and spreading shall conform to 302-5.5 except that at the time of delivery to the work site, the temperature of the RACHM-GG shall be 300 °F minimum to 330 °F) maximum. When atmospheric temperatures are above 85°F), the temperature of the mix delivered to the site may be reduced to 290°F if approved by the Contracting Officer. Atmospheric temperature shall be 50 °F and rising. RACHM-GG shall conform to the specifications for 302-5 except RACHM-GG shall consist of one or more courses of an asphalt-rubber binder and graded aggregate conforming to 203-11.3 placed upon a prepared roadbed or base, or over existing pavement. The courses shall conform to the requirements as shown on the Plans or in the Specifications.

3.1.3 Rolling

Rolling shall conform to 302-5.6 except that vibratory rollers using the vibratory mode shall be used for initial breakdown rolling . The initial coverage of breakdown rolling shall commence before the RACHM-GG temperature falls below 290 °F. If the atmospheric temperature is above 85°F, the initial breakdown rolling temperature may be reduced to 280°F. Pneumatic rollers shall not be used. If the temperature of the mat during breakdown rolling is reduced, this will not relieve the Contractor of his compaction requirements.

3.1.4 Rock Dust Blotter

At the option of the Contracting Officer, when traffic conditions warrant, a rock dust blotter may be required to avoid tracking. Rock dust blotter shall conform to 200-1.2 and be uniformly applied using a mechanical spreader at a rate of 2 lbs./yd2 minimum to 4 lbs./yd2 maximum. When the RACHM-GG pavement has cooled to below 150 °F, the rock dust blotter may not be required. Rock dust blotter placement and sweeping shall be included in the price bid for other items of work and no additional compensation will be allowed therefor.

-- End of Section --

SECTION TABLE OF CONTENTS

DIVISION 02 - SITE WORK

SECTION 02741

HOT-MIX ASPHALT (HMA) FOR ROADS, STREETS AND OPEN STORAGE AREAS

PART 1 GENERAL

1.1 REFERENCES
1.2 DESCRIPTION OF WORK
1.3 SUBMITTALS
1.4 METHOD OF MEASUREMENT
1.5 BASIS OF PAYMENT
1.6 ASPHALT MIXING PLANT
1.7 HAULING EQUIPMENT
1.8 ASPHALT PAVERS
1.8.1 Receiving Hopper
1.8.2 Automatic Grade Controls
1.9 ROLLERS
1.10 WEATHER LIMITATIONS
1.11 Straightedge

PART 2 PRODUCTS

2.1 AGGREGATES
2.1.1 Coarse Aggregate
2.1.2 Fine Aggregate
2.1.3 Mineral Filler
2.1.4 Aggregate Gradation
2.2 ASPHALT CEMENT BINDER
2.2.1 PG Grades
2.3 MIX DESIGN
2.3.1 JMF Requirements
2.3.2 Adjustments to Field JMF

PART 3 EXECUTION

3.1 PREPARATION OF ASPHALT BINDER MATERIAL
3.2 PREPARATION OF MINERAL AGGREGATE
3.3 PREPARATION OF HOT-MIX ASPHALT MIXTURE
3.4 PREPARATION OF THE UNDERLYING SURFACE
3.5 TEST SECTION
3.5.1 Sampling and Testing for Test Section
3.5.2 Additional Test Sections
3.6 TESTING LABORATORY
3.7 TRANSPORTING AND PLACING
3.7.1 Transporting
3.7.2 Placing
3.8 COMPACTION OF MIXTURE
3.9 JOINTS
3.9.1 Transverse Joints
3.9.2 Longitudinal Joints
3.10 CONTRACTOR QUALITY CONTROL
3.10.1 General Quality Control Requirements

3.10.2 Testing Laboratory
3.10.3 Quality Control Testing
3.10.3.1 Asphalt Content
3.10.3.2 Gradation
3.10.3.3 Temperatures
3.10.3.4 Aggregate Moisture
3.10.3.5 Moisture Content of Mixture
3.10.3.6 Laboratory Air Voids, Marshall Stability and Flow
3.10.3.7 In-Place Density
3.10.3.8 Grade and Smoothness
3.10.3.9 Additional Testing
3.10.3.10 QC Monitoring
3.10.4 Sampling
3.10.5 Control Charts
3.11 MATERIAL ACCEPTANCE
3.11.1 Acceptance
3.11.2 Sublot Sampling
3.11.3 Additional Sampling and Testing
3.11.4 Laboratory Air Voids
3.11.5 Mean Absolute Deviation
3.11.6 In-place Density
3.11.6.1 General Density Requirements
3.11.6.2 Mat and Joint Densities
3.11.7 Grade
3.11.8 Surface Smoothness
3.11.8.1 Smoothness Requirements
3.11.8.2 Testing Method
3.11.8.3 Surface Deviation

-- End of Section Table of Contents --

SECTION 02741

HOT-MIX ASPHALT (HMA) FOR ROADS, STREETS AND OPEN STORAGE AREAS

PART 1 GENERAL

1.1 REFERENCES

The publications listed below form a part of this specification to the extent referenced. The publications are referred to in the text by basic designation only.

AMERICAN ASSOCIATION OF STATE HIGHWAY AND TRANSPORTATION OFFICIALS (AASHTO)

AASHTO MP2	(1997) Superpave Volumetric Mix Design
AASHTO TP53	(1995) Determining Asphalt Content of Hot Mix Asphalt by the Ignition Method

AMERICAN SOCIETY FOR TESTING AND MATERIALS (ASTM)

ASTM C 88	(1998) Soundness of Aggregates by Use of Sodium Sulfate or Magnesium Sulfate
ASTM C 117	(1995) Materials Finer than 75 micrometer (No. 200) Sieve in Mineral Aggregates by Washing
ASTM C 131	(1996) Resistance to Degradation of Small-Size Coarse Aggregate by Abrasion and Impact in the Los Angeles Machine
ASTM C 136	(1996a) Sieve Analysis of Fine and Coarse Aggregates
ASTM C 566	(1997) Total Evaporable Moisture Content of Aggregate by Drying
ASTM C 1252	(1993) Uncompacted Void Content of Fine Aggregate (as Influenced by Particle Shape, Surface Texture, and Grading)
ASTM D 140	(1998) Sampling Bituminous Materials
ASTM D 242	(1995) Mineral Filler for Bituminous Paving Mixtures
ASTM D 995	(1995b) Mixing Plants for Hot-Mixed, Hot-Laid Bituminous Paving Mixtures
ASTM D 1461	(1985; R 1994) Moisture or Volatile Distillates in Bituminous Paving Mixtures
ASTM D 1559	(1989) Resistance to Plastic Flow of

	Bituminous Mixtures Using Marshall Apparatus
ASTM D 2041	(1995) Theoretical Maximum Specific Gravity and Density of Bituminous Paving Mixtures
ASTM D 2172	(1995) Quantitative Extraction of Bitumen from Bituminous Paving Mixtures
ASTM D 2419	(1995) Sand Equivalent Value of Soils and Fine Aggregate
ASTM D 2489	(1984; R 1994) Degree of Particle Coating of Bituminous-Aggregate Mixtures
ASTM D 2726	(1996a) Bulk Specific Gravity and Density of Non-Absorptive Compacted Bituminous Mixture
ASTM D 2950	(1997) Density of Bituminous Concrete in Place by Nuclear Method
ASTM D 3381	(1992) Viscosity-Graded Asphalt Cement for Use in Pavement Construction
ASTM D 3665	(1994) Random Sampling of Construction Materials
ASTM D 3666	(1996a) Minimum Requirements for Agencies Testing and Inspecting Bituminous Paving Materials
ASTM D 4125	(1994) Asphalt Content of Bituminous Mixtures by the Nuclear Method
ASTM D 4791	(1995) Flat Particles, Elongated Particles, or Flat and Elongated Particles in Coarse Aggregate
ASTM D 4867/D 4867M	(1996) Effect of Moisture on Asphalt Concrete Paving Mixtures
ASTM D 5444	(1994) Mechanical Size Analysis of Extracted Aggregate
ASTM D 6307	(1998) Asphalt Content of Hot Mix Asphalt by Ignition Method

ASPHALT INSTITUTE (AI)

AI MS-2	(1994) Mix Design Methods for Asphalt Concrete and Other Hot-Mix Types

CORPS OF ENGINEERS (COE)

COE CRD-C 171	(1995) Test Method for Determining Percentage of Crushed Particles in Aggregate

1.2 DESCRIPTION OF WORK

The work shall consist of pavement courses composed of mineral aggregate and asphalt material heated and mixed in a central mixing plant and placed on a prepared course. HMA designed and constructed in accordance with this section shall conform to the lines, grades, thicknesses, and typical cross sections shown on the drawings. Each course shall be constructed to the depth, section, or elevation required by the drawings and shall be rolled, finished, and approved before the placement of the next course.

1.3 SUBMITTALS

Government approval is required for submittals with a "GA" designation; submittals having an "FIO" designation are for information only. The following shall be submitted in accordance with Section 01330 SUBMITTAL PROCEDURES:

SD-09 Reports

Aggregates; GA. QC Monitoring; GA.

Aggregate and QC test results.

SD-13 Certificates

Asphalt Cement Binder; GA.

Copies of certified test data.

Testing Laboratory; GA.

Certification of compliance.

Plant and Plant Scale Calibration Certifications

SD-14 Samples

Asphalt Cement Binder; FIO.

5 gallon sample for mix design verification.

Aggregates; FIO.

Sufficient materials to produce 200 lb of blended mixture for mix design verification.

SD-18 Records

Mix Design; GA.

Proposed JMF.

Contractor Quality Control; GA.

Quality control plan.

Material Acceptance; GA

Acceptance test results

1.4 METHOD OF MEASUREMENT

The amount paid for will be the number of 3-inch thick or each additional inch thick square yards of approved hot-mix asphalt mixture used in the accepted work. Impressed-formed rumble strips on the edges of asphalt concrete paved roadways shall be measured as linear feet of completed and accepted work. Asphalt concrete curb work shall be measured in linear feet.

1.5 BASIS OF PAYMENT

Quantities of asphalt concrete placed,, determined as specified above, will be paid for at respective contract unit prices for the base year Line Items: 0001AA and 0003AA, "PAVEMENT 3"; and 0001AB,"EACH ADDITIONAL INCH" of the Pricing Schedule, or at reduced prices adjusted in accordance with paragraph MATERIAL ACCEPTANCE. Rumble strips shall be paid for under the base year Line Item 0001AM, "RUMBLE STRIPS" of the Pricing Schedule. Asphalt concrete curbs shall be paid for under the base year Line Item 0012, "NEW ASPHALT CURB" of the Pricing Schedule. Asphalt concrete shall be considered as part of the incidental items for the base year Line Item 0002, "PATCHING EXISTING ASPHALT"; no additional compensation shall be forthcoming for patching asphalt concrete. Payment shall constitute full compensation for furnishing all materials, equipment, plant, and tools; and for all labor and other incidentals necessary to complete work required by this section of the specification.

1.6 ASPHALT MIXING PLANT

The plant shall have a minimum capacity of 300 tons per hour
Plants used for the preparation of hot-mix asphalt shall conform to the requirements of ASTM D 995 with the following changes:

a. Truck Scales. The asphalt mixture shall be weighed on approved certified scales at the Contractor's expense. Scales shall be inspected and sealed at least annually by an approved calibration laboratory.

b. Testing Facilities. The Contractor shall provide laboratory facilities at the plant for the use of the Government's acceptance testing and the Contractor's quality control testing.

c. Inspection of Plant. The Contracting Officer shall have access at all times, to all areas of the plant for checking adequacy of equipment; inspecting operation of the plant; verifying weights, proportions, and material properties; checking the temperatures maintained in the preparation of the mixtures and for taking samples. The Contractor shall provide assistance as requested, for the Government to procure any desired samples.

d. Storage Bins. Use of storage bins for temporary storage of hot-mix asphalt will be permitted as follows:

(1) The asphalt mixture may be stored in non-insulated storage bins for a period of time not exceeding 3 hours.

(2) The asphalt mixture may be stored in insulated storage bins for a period of time not exceeding 8 hours. The mix drawn from bins shall meet the same requirements as mix loaded directly into trucks.

1.7 HAULING EQUIPMENT

Trucks used for hauling hot-mix asphalt shall have tight, clean, and smooth metal beds. To prevent the mixture from adhering to them, the truck beds shall be lightly coated with a minimum amount of paraffin oil, lime solution, or other approved material. Petroleum based products shall not be used as a release agent. Each truck shall have a suitable cover to protect the mixture from adverse weather. When necessary to ensure that the mixture will be delivered to the site at the specified temperature, truck beds shall be insulated or heated and covers (tarps) shall be securely fastened.

1.8 ASPHALT PAVERS

Asphalt pavers shall be self-propelled, with an activated screed, heated as necessary, and shall be capable of spreading and finishing courses of hot-mix asphalt which will meet the specified thickness, smoothness, and grade. The paver shall have sufficient power to propel itself and the hauling equipment without adversely affecting the finished surface.

1.8.1 Receiving Hopper

The paver shall have a receiving hopper of sufficient capacity to permit a uniform spreading operation. The hopper shall be equipped with a distribution system to place the mixture uniformly in front of the screed without segregation. The screed shall effectively produce a finished surface of the required evenness and texture without tearing, shoving, or gouging the mixture.

1.8.2 Automatic Grade Controls

If an automatic grade control device is used, the paver shall be equipped with a control system capable of automatically maintaining the specified screed elevation. The control system shall be automatically actuated from either a reference line and/or through a system of mechanical sensors or sensor-directed mechanisms or devices which will maintain the paver screed at a predetermined transverse slope and at the proper elevation to obtain the required surface. The transverse slope controller shall be capable of maintaining the screed at the desired slope within plus or minus 0.1 percent. A transverse slope controller shall not be used to control grade. The controls shall be capable of working in conjunction with any of the following attachments:

a. Ski-type device of not less than 30 feet in length.

b. Taut stringline set to grade.

c. Short ski or shoe for joint matching.

d. Laser control.

1.9 ROLLERS

Rollers shall be in good condition and shall be operated at slow speeds to avoid displacement of the asphalt mixture. The number, type, and weight of rollers shall be sufficient to compact the mixture to the required density while it is still in a workable condition. Equipment which causes excessive crushing of the aggregate shall not be used.

1.10 WEATHER LIMITATIONS

The hot-mix asphalt shall not be placed upon a wet surface or when the surface temperature of the underlying course is less than specified in Table 1. The temperature requirements may be waived by the Contracting Officer, if requested; however, all other requirements, including compaction, shall be met.

Table 1. Surface Temperature Limitations of Underlying Course

Mat Thickness, inches	Degrees F
3	45

1.11 Straightedge

The Contractor shall furnish one 12 foot straightedge for each bituminous paver, constructed of aluminum or other lightweight metal, with box or box-girder cross section with flat bottom and handles.

PART 2 PRODUCTS

2.1 AGGREGATES

Aggregates shall consist of crushed stone, crushed gravel, crushed slag, screenings, natural sand and mineral filler, as required. The portion of material retained on the No. 4 sieve is coarse aggregate. The portion of material passing the No. 4 sieve and retained on the No. 200 sieve is fine aggregate. The portion passing the No. 200 sieve is defined as mineral filler. All aggregate test results and samples shall be submitted to the Contracting Officer at least 14 days prior to start of construction.

2.1.1 Coarse Aggregate

Coarse aggregate shall consist of sound, tough, durable particles, free from films of material that would prevent thorough coating and bonding with the asphalt material and free from organic matter and other deleterious substances. All individual coarse aggregate sources shall meet the following requirements:

a. The percentage of loss shall not be greater than 40 percent after 500 revolutions when tested in accordance with ASTM C 131.

b. The percentage of loss shall not be greater than 18 percent after five cycles when tested in accordance with ASTM C 88 using magnesium sulfate.

c. At least 75 percent by weight of coarse aggregate shall have at least two or more fractured faces when tested in accordance with COE CRD-C 171. Fractured faces shall be produced by crushing.

d. The particle shape shall be essentially cubical and the aggregate shall not contain more than 20% percent, by weight, of flat and elongated particles (3:1 ratio of maximum to minimum) when tested in accordance with ASTM D 4791.

2.1.2 Fine Aggregate

Fine aggregate shall consist of clean, sound, tough, durable particles.

The aggregate particles shall be free from coatings of clay, silt, or any objectionable material and shall contain no clay balls. All individual fine aggregate sources shall have a sand equivalent value greater not less than 45 when tested in accordance with ASTM D 2419.

The fine aggregate portion of the blended aggregate shall have an uncompacted void content not less than 43.0 percent when tested in accordance with ASTM C 1252 Method A.

2.1.3 Mineral Filler

Mineral filler shall be nonplastic material meeting the requirements of ASTM D 242.

2.1.4 Aggregate Gradation

The combined aggregate gradation shall conform to gradations specified in Table 2, when tested in accordance with ASTM C 136 and ASTM C 117, and shall not vary from the low limit on one sieve to the high limit on the adjacent sieve or vice versa, but grade uniformly from coarse to fine.

Table 2. Aggregate Gradations

Sieve Size, inch	Percent Passing by Weight
1	---
3/4	100
1/2	76-96
3/8	69-89
No. 4	53-73
No. 8	38-60
No. 16	26-48
No. 30	18-38
No. 50	11-27
No. 100	6-18
No. 200	3-6

2.2 ASPHALT CEMENT BINDER

Asphalt cement binder shall conform to ASTM D 3381 Table 2, Viscosity **Grade AR-4000**. Test data indicating grade certification shall be provided by the supplier at the time of delivery of each load to the mix plant. Copies of these certifications shall be submitted to the Contracting Officer. The supplier is defined as the last source of any modification to the binder. The Contracting Officer may sample and test the binder at the mix plant at any time before or during mix production. Samples for this verification testing shall be obtained by the Contractor in accordance with ASTM D 140 and in the presence of the Contracting Officer. These samples shall be furnished to the Contracting Officer for the verification testing, which shall be at no cost to the Contractor. Samples of the asphalt cement specified shall be submitted for approval not less than 14 days before start of the test section.

2.2.1 PG Grades

Alternatively, if the Superpave mix design system is implemented, the correct performance graded(PG) binder shall be used.

2.3 MIX DESIGN

The Contractor shall develop the mix design. The asphalt mix shall be composed of a mixture of well-graded aggregate, mineral filler if required, and asphalt material. The aggregate fractions shall be sized, handled in separate size groups, and combined in such proportions that the resulting mixture meets the grading requirements of the job mix formula (JMF). No hot-mix asphalt shall be produced until a JMF has been approved. The hot-mix asphalt shall be designed using procedures contained in AI MS-2 and the criteria shown in Table 3. If the Tensile Strength Ratio (TSR) of the composite mixture, as determined by ASTM D 4867/D 4867M is less than 75, the aggregates shall be rejected or the asphalt mixture treated with an approved anti-stripping agent. The amount of anti-stripping agent added shall be sufficient to produce a TSR of not less than 75. If an antistrip agent is required, it shall be provided by the Contractor at no additional cost. Sufficient materials to produce 200 pound of blended mixture shall be provided to the Contracting Officer for verification of mix design at least 14 days prior to construction of test section.

At the option of the contractor a currently used DOT superpave hot mix may be used in lieu of developing a new hot mix design study as described herein. The superpave volumetric mix shall be designed in accordance with AASHTO MP2.

2.3.1 JMF Requirements

The job mix formula shall be submitted in writing by the Contractor for approval at least 14 days prior to the start of the test section and shall include as a minimum:

a. Percent passing each sieve size.

b. Percent of asphalt cement.

c. Percent of each aggregate and mineral filler to be used.

d. Asphalt viscosity grade, penetration grade, or performance grade.

e. Number of blows of hammer per side of molded specimen.

f. Laboratory mixing temperature.

g. Lab compaction temperature.

h. Temperature-viscosity relationship of the asphalt cement.

i. Plot of the combined gradation on the 0.45 power gradation chart, stating the nominal maximum size.

j. Graphical plots of stability, flow, air voids, voids in the mineral aggregate, and unit weight versus asphalt content as shown in AI MS-2.

k. Specific gravity and absorption of each aggregate.

l. Percent natural sand.

m. Percent particles with 2 or more fractured faces (in coarse aggregate).

n. Fine aggregate angularity.

o. Percent flat or elongated particles (in coarse aggregate).

p. Tensile Strength Ratio(TSR).

q. Antistrip agent (if required) and amount.

r. List of all modifiers and amount.

Table 3. Marshall Design Criteria

Test Property	75 Blow Mix
Stability, pounds minimum	*1800
Flow, 0.01 inch	8-16
Air voids, percent	3-5
Percent Voids in mineral aggregate VMA, (minimum)	14
TSR, minimum percent	75

* This is a minimum requirement. The average during construction shall be significantly higher than this number to ensure compliance with the specifications.
** Calculate VMA in accordance with AI MS-2, based on ASTM D 2726 bulk specific gravity for the aggregate.

2.3.2 Adjustments to Field JMF

The Laboratory JMF for each mixture shall be in effect until a new formula is approved in writing by the Contracting Officer. Should a change in sources of any materials be made, a new laboratory jmf design shall be performed and a new JMF approved before the new material is used. The Contractor will be allowed to adjust the Laboratory JMF within the limits specified below to optimize mix volumetric properties with the approval of the Contracting Officer. Adjustments to the Laboratory JMF shall be applied to the field (plant) established JMF and limited to those values as shown. Adjustments shall be targeted to produce or nearly produce 4 percent voids total mix (VTM).

TABLE 4. Field (Plant) Established JMF Tolerances

Sieves	Adjustments (plus or minus), percent
No. 4	3
No. 8	3
No. 200	1
Binder Content	0.40

If adjustments are needed that exceed these limits, a new mix design shall be developed. Tolerances given above may permit the aggregate grading to be outside the limits shown in Table 2; while not desirable, this is

acceptable.

PART 3 EXECUTION

3.1 PREPARATION OF ASPHALT BINDER MATERIAL

The asphalt cement material shall be heated avoiding local overheating and providing a continuous supply of the asphalt material to the mixer at a uniform temperature. The temperature of unmodified asphalts shall be no more than 325 degrees F when added to the aggregates. Modified asphalts shall be no more than 350 degrees F when added to the aggregates.

3.2 PREPARATION OF MINERAL AGGREGATE

The aggregate for the mixture shall be heated and dried prior to mixing. No damage shall occur to the aggregates due to the maximum temperature and rate of heating used. The temperature of the aggregate and mineral filler shall not exceed 350 degrees F when the asphalt cement is added. The temperature shall not be lower than is required to obtain complete coating and uniform distribution on the aggregate particles and to provide a mixture of satisfactory workability.

3.3 PREPARATION OF HOT-MIX ASPHALT MIXTURE

The aggregates and the asphalt cement shall be weighed or metered and introduced into the mixer in the amount specified by the JMF. The combined materials shall be mixed until the aggregate obtains a uniform coating of asphalt binder and is thoroughly distributed throughout the mixture. Wet mixing time shall be the shortest time that will produce a satisfactory mixture, but no less than 25 seconds for batch plants. The wet mixing time for all plants shall be established by the Contractor, based on the procedure for determining the percentage of coated particles described in ASTM D 2489, for each individual plant and for each type of aggregate used. The wet mixing time will be set to at least achieve 95 percent of coated particles. The moisture content of all hot-mix asphalt upon discharge from the plant shall not exceed 0.5 percent by total weight of mixture as measured by ASTM D 1461.

3.4 PREPARATION OF THE UNDERLYING SURFACE

Immediately before placing the hot mix asphalt, the underlying course shall be cleaned of dust and debris. A prime coat shall be applied in accordance with the contract specifications.

3.5 TEST SECTION

Prior to full production, the Contractor shall place a test section for each JMF used. The contractor shall construct a test section 250 - 500 feet long and two paver passes wide placed for two lanes, with a longitudinal cold joint. The test section shall be of the same depth as the course which it represents. The underlying grade or pavement structure upon which the test section is to be constructed shall be the same as the remainder of the course represented by the test section. The equipment and personnel used in construction of the test section shall be the same equipment to be used on the remainder of the course represented by the test section. The test section shall be placed as part of the project pavement as approved by the Contracting Officer.

3.5.1 Sampling and Testing for Test Section

Cores shall be 4 inches in diameter and shall be suitable to determine density and thickness requirements. Cores are not to be used to determine Marshall properties. Marshall properties shall be determined from laboratory compacted specimens form the hot mix samples taken during production. One random sample shall be taken at the plant, triplicate specimens compacted, and tested for stability, flow, and laboratory air voids. A portion of the same sample shall be tested for aggregate gradation and asphalt content. Four randomly selected cores shall be taken from the finished pavement mat, and four from the longitudinal joint, and tested for density. Random sampling shall be in accordance with procedures contained in ASTM D 3665. The test results shall be within the tolerances shown in Table 5 for work to continue. If all test results meet the specified requirements, the test section shall remain as part of the project pavement. If test results exceed the tolerances shown, the test section shall be removed and replaced at no cost to the Government and another test section shall be constructed.

Table 5. Test Section Requirements for Material and Mixture Properties

Property	Specification Limit
Aggregate Gradation-Percent Passing (Individual Test Result)	
No. 4 and larger	JMF plus or minus 8
No. 8, No. 16, No. 30, and No. 50	JMF plus or minus 6
No. 100 and No. 200	JMF plus or minus 2.0
Asphalt Content, Percent (Individual Test Result)	JMF plus or minus 0.5
Laboratory Air Voids, Percent (Average of 3 specimens)	JMF plus or minus 1.0
VMA, Percent (Average of 3 specimens)	14 minimum
Stability, pounds (Average of 3 specimens)	1800 minimum
Flow, 0.01 inches (Average of 3 specimens)	8 - 16
Mat Density, Percent of Marshall (Average of 4 Random Cores)	97.0 - 100.5
Joint Density, Percent of Marshall (Average of 4 Random Cores)	95.5 - 100.5

3.5.2 Additional Test Sections

If the initial test section should prove to be unacceptable, the necessary adjustments to the JMF, plant operation, placing procedures, and/or rolling procedures shall be made. A second test section shall then be placed. Additional test sections, as required, shall be constructed and evaluated for conformance to the specifications. Full production shall not begin until an acceptable section has been constructed and accepted.

3.6 TESTING LABORATORY

The laboratory used to develop the JMF shall meet the requirements of ASTM D 3666 and shall be certified by Waterway Experiment Station. A certification signed by the manager of the laboratory stating that it meets these requirements or clearly listing all deficiencies shall be submitted to the Contracting Officer prior to the start of construction. The certification shall contain as a minimum:

a. Qualifications of personnel; laboratory manager, supervising technician, and testing technicians.

b. A listing of equipment to be used in developing the job mix.

c. A copy of the laboratory's quality control system.

d. Evidence of participation in the AASHTO Materials Reference Laboratory (AMRL) program.

3.7 TRANSPORTING AND PLACING

3.7.1 Transporting

The hot-mix asphalt shall be transported from the mixing plant to the site in clean, tight vehicles. Deliveries shall be scheduled so that placing and compacting of mixture is uniform with minimum stopping and starting of the paver. Adequate artificial lighting shall be provided for night placements. Hauling over freshly placed material will not be permitted until the material has been compacted as specified, and allowed to cool to 140 degrees F.

3.7.2 Placing

The mix shall be placed and compacted at a temperature suitable for obtaining density, surface smoothness, and other specified requirements. Upon arrival, the mixture shall be placed to the full width by an asphalt paver; it shall be struck off in a uniform layer of such depth that, when the work is completed, it shall have the required thickness and conform to the grade and contour indicated. The speed of the paver shall be regulated to eliminate pulling and tearing of the asphalt mat. Unless otherwise permitted, placement of the mixture shall begin along the centerline of a crowned section or on the high side of areas with a one-way slope. The mixture shall be placed in consecutive adjacent strips having a minimum width of 10 feet. The longitudinal joint in one course shall offset the longitudinal joint in the course immediately below by at least 1 foot; however, the joint in the surface course shall be at the centerline of the pavement. Transverse joints in one course shall be offset by at least 10 feet from transverse joints in the previous course. Transverse joints in adjacent lanes shall be offset a minimum of 10 feet. On isolated areas where irregularities or unavoidable obstacles make the use of mechanical spreading and finishing equipment impractical, the mixture may be spread and luted by hand tools.

3.8 COMPACTION OF MIXTURE

After placing, the mixture shall be thoroughly and uniformly compacted by rolling. The surface shall be compacted as soon as possible without causing displacement, cracking or shoving. The sequence of rolling operations and the type of rollers used shall be at the discretion of the Contractor. The speed of the roller shall, at all times, be sufficiently slow to avoid displacement of the hot mixture and be effective in

compaction. Any displacement occurring as a result of reversing the direction of the roller, or from any other cause, shall be corrected at once. Sufficient rollers shall be furnished to handle the output of the plant. Rolling shall continue until the surface is of uniform texture, true to grade and cross section, and the required field density is obtained. To prevent adhesion of the mixture to the roller, the wheels shall be kept properly moistened but excessive water will not be permitted. In areas not accessible to the roller, the mixture shall be thoroughly compacted with hand tampers. Any mixture that becomes loose and broken, mixed with dirt, contains check-cracking, or is in any way defective shall be removed full depth, replaced with fresh hot mixture and immediately compacted to conform to the surrounding area. This work shall be done at the Contractor's expense. Skin patching will not be allowed.

3.9 JOINTS

The formation of joints shall be made ensuring a continuous bond between the courses and to obtain the required density. All joints shall have the same texture as other sections of the course and meet the requirements for smoothness and grade.

3.9.1 Transverse Joints

The roller shall not pass over the unprotected end of the freshly laid mixture, except when necessary to form a transverse joint. When necessary to form a transverse joint, it shall be made by means of placing a bulkhead or by tapering the course. The tapered edge shall be cut back to its full depth and width on a straight line to expose a vertical face prior to placing material at the joint . The cutback material shall be removed from the project. In both methods, all contact surfaces shall be given a light tack coat of asphalt material before placing any fresh mixture against the joint.

3.9.2 Longitudinal Joints

Longitudinal joints which are irregular, damaged, uncompacted, cold (less than 175 degrees F at the time of placing adjacent lanes), or otherwise defective, shall be cut back a minimum of 2 inches from the edge with a cutting wheel to expose a clean, sound vertical surface for the full depth of the course. All cutback material shall be removed from the project. All contact surfaces shall be given a light tack coat of asphalt material prior to placing any fresh mixture against the joint. The Contractor will be allowed to use an alternate method if it can be demonstrated that density, smoothness, and texture can be met.

3.10 CONTRACTOR QUALITY CONTROL

3.10.1 General Quality Control Requirements

The Contractor shall develop an approved Quality Control Plan. Hot-mix asphalt for payment shall not be produced until the quality control plan has been approved. The plan shall address all elements which affect the quality of the pavement including, but not limited to:

a. Mix Design

b. Aggregate Grading

c. Quality of Materials

d. Stockpile Management

e. Proportioning

f. Mixing and Transportation

g. Mixture Volumetrics

h. Moisture Content of Mixtures

i. Placing and Finishing

j. Joints

k. Compaction

l. Surface Smoothness

3.10.2 Testing Laboratory

The Contractor shall provide a fully equipped asphalt laboratory located at the plant or job site. The laboratory shall meet the requirements as required in ASTM D 3666 and shall be certified by the Laboratory Manager as required in section: TESTING LABORATORY. The effective working area of the laboratory shall be a minimum of 150 square feet with a ceiling height of not less than 7.5 feet. Lighting shall be adequate to illuminate all working areas. It shall be equipped with heating and air conditioning units to maintain a temperature of 75 degrees F plus or minus 5 degrees F. Laboratory facilities shall be kept clean and all equipment shall be maintained in proper working condition. The Contracting Officer shall be permitted unrestricted access to inspect the Contractor's laboratory facility, to witness quality control activities, and to perform any check testing desired. The Contracting Officer will advise the Contractor in writing of any noted deficiencies concerning the laboratory facility, equipment, supplies, or testing personnel and procedures. When the deficiencies are serious enough to adversely affect test results, the incorporation of the materials into the work shall be suspended immediately and will not be permitted to resume until the deficiencies are corrected.

3.10.3 Quality Control Testing

Cores shall be 4 inches in diameter and shall be suitable to determine density and thickness requirements. Cores are not to be used to determine Marshall properties. Marshall properties shall be determined from laboratory compacted specimens form the hot mix samples taken during production. The Contractor shall perform all quality control tests applicable to these specifications and as set forth in the Quality Control Program. The testing program shall include, but shall not be limited to, tests for the control of asphalt content, aggregate gradation, temperatures, aggregate moisture, moisture in the asphalt mixture, laboratory air voids, stability, flow, in-place density, grade and smoothness. A Quality Control Testing Plan shall be developed as part of the Quality Control Program.

3.10.3.1 Asphalt Content

A minimum of two tests to determine asphalt content will be performed per lot (a lot is defined in paragraph MATERIAL ACCEPTANCE) by one of the

following methods: the extraction method in accordance with ASTM D 2172, Method A or B, the ignition method in accordance with the AASHTO TP53or ASTM D 6307, or the nuclear method in accordance with ASTM D 4125, provided the nuclear gauge is calibrated for the specific mix being used. For the extraction method, the weight of ash, as described in ASTM D 2172, shall be determined as part of the first extraction test performed at the beginning of plant production; and as part of every tenth extraction test performed thereafter, for the duration of plant production. The last weight of ash value obtained shall be used in the calculation of the asphalt content for the mixture.

3.10.3.2 Gradation

Aggregate gradations shall be determined a minimum of twice per lot from mechanical analysis of recovered aggregate in accordance with ASTM D 5444. When asphalt content is determined by the nuclear method, aggregate gradation shall be determined from hot bin samples on batch plants, or from the cold feed on drum mix plants. For batch plants, aggregates shall be tested in accordance with ASTM C 136 using actual batch weights to determine the combined aggregate gradation of the mixture.

3.10.3.3 Temperatures

Temperatures shall be checked at least four times per lot, at necessary locations, to determine the temperature at the dryer, the asphalt cement in the storage tank, the asphalt mixture at the plant, and the asphalt mixture at the job site.

3.10.3.4 Aggregate Moisture

The moisture content of aggregate used for production shall be determined a minimum of once per lot in accordance with ASTM C 566.

3.10.3.5 Moisture Content of Mixture

The moisture content of the mixture shall be determined at least once per lot in accordance with ASTM D 1461 or an approved alternate procedure.

3.10.3.6 Laboratory Air Voids, Marshall Stability and Flow

Mixture samples shall be taken at least four times per lot and compacted into specimens, using 75 blows per side with the Marshall hammer as described in ASTM D 1559. After compaction, the laboratory air voids of each specimen shall be determined, as well as the Marshall stability and flow.

3.10.3.7 In-Place Density

The Contractor shall conduct any necessary testing to ensure the specified density is achieved. A nuclear gauge may be used to monitor pavement density in accordance with ASTM D 2950.

3.10.3.8 Grade and Smoothness

The Contractor shall conduct the necessary checks to ensure the grade and smoothness requirements are met in accordance with paragraph MATERIAL ACCEPTANCE.

3.10.3.9 Additional Testing

Any additional testing, which the Contractor deems necessary to control the process, may be performed at the Contractor's option.

3.10.3.10 QC Monitoring

The Contractor shall submit all QC test results to the Contracting Officer on a daily basis as the tests are performed. The Contracting Officer reserves the right to monitor any of the Contractor's quality control testing and to perform duplicate testing as a check to the Contractor's quality control testing.

3.10.4 Sampling

When directed by the Contracting Officer, the Contractor shall sample and test any material which appears inconsistent with similar material being produced, unless such material is voluntarily removed and replaced or deficiencies corrected by the Contractor. All sampling shall be in accordance with standard procedures specified.

3.10.5 Control Charts

For process control, the Contractor shall establish and maintain linear control charts on both individual samples and the running average of last four samples for the parameters listed in Table 6, as a minimum. These control charts shall be posted as directed by the Contracting Officer and shall be kept current at all times. The control charts shall identify the project number, the test parameter being plotted, the individual sample numbers, the Action and Suspension Limits listed in Table 6 applicable to the test parameter being plotted, and the Contractor's test results. Target values from the JMF shall also be shown on the control charts as indicators of central tendency for the cumulative percent passing, asphalt content, and laboratory air voids parameters. When the test results exceed either applicable Action Limit, the Contractor shall take immediate steps to bring the process back in control. When the test results exceed either applicable Suspension Limit, the Contractor shall halt production until the problem is solved. The Contractor shall use the control charts as part of the process control system for identifying trends so that potential problems can be corrected before they occur. Decisions concerning mix modifications shall be made based on analysis of the results provided in the control charts. The Quality Control Plan shall indicate the appropriate action which shall be taken to bring the process into control when certain parameters exceed their Action Limits.

Table 6. Action and Suspension Limits for the Parameters to be Plotted on Individual and Running Average Control Charts

	Running Average of Individual Samples		Last Four Samples	
Parameter to be Plotted	Action Limit	Suspension Limit	Action Limit	Suspension Limit
No. 4 sieve, Cumulative % Passing, deviation from JMF target; plus or minus values	6	8	4	5
No. 30 sieve, Cumulative %	4	6	3	4

Table 6. Action and Suspension Limits for the Parameters to be Plotted on Individual and Running Average Control Charts

Parameter to be Plotted	Running Average of Individual Samples		Last Four Samples	
	Action Limit	Suspension Limit	Action Limit	Suspension Limit
Passing, deviation from JMF target; plus or minus values				
No. 200 sieve, Cumulative % Passing, deviation from JMF target; plus or minus values	1.4	2.0	1.1	1.5
Stability, pounds (minimum) 75 Blow JMF	1800	1700	1900	1800
Flow, 0.01 inches 75 Blow	8 min. 16 max.	7 min. 17 max.	9 min. 15 max.	8 min. 16 max.
Asphalt content, % deviation from JMF target; plus or minus value	0.4	0.5	0.2	0.3
Laboratory Air Voids, % deviation from JMF target value	No specific action and suspension limits set since this parameter is used to determine acceptance			
In-place Mat Density, % of Marshall density	No specific action and suspension limits set since this parameter is used to determine acceptance			
In-place Joint Density, % of Marshall density	No specific action and suspension limits set since this parameter is used to determine acceptance			

3.11 MATERIAL ACCEPTANCE

Testing for acceptability of work will be performed by an independent laboratory, certified by Waterways Experiment Station, hired by the Contractor. Test results shall be forwarded daily to the Contracting Officer. Acceptance of the plant produced mix and in-place requirements will be on a lot to lot basis. A standard lot for all requirements will be equal to 8 hours of production and minimum of 2000 tons. In order to evaluate laboratory air voids and in-place (field) density, each lot will be divided into four equal sublots.

3.11.1 Acceptance

When a lot of material fails to meet the specification requirements that lot shall be removed and replaced.

3.11.2 Sublot Sampling

One random mixture sample for determining laboratory air voids, theoretical maximum density, and for any additional testing the Contracting Officer

requires, will be taken from a loaded truck delivering mixture to each sublot, or other appropriate location for each sublot. All samples will be selected randomly, using commonly recognized methods of assuring randomness conforming to ASTM D 3665 and employing tables of random numbers or computer programs. Laboratory air voids will be determined from three laboratory compacted specimens of each sublot sample in accordance with ASTM D 1559. The specimens will be compacted within 2 hours of the time the mixture was loaded into trucks at the asphalt plant. Samples will not be reheated prior to compaction and insulated containers will be used as necessary to maintain the temperature.

3.11.3 Additional Sampling and Testing

The Contracting Officer reserves the right to direct additional samples and tests for any area which appears to deviate from the specification requirements. The cost of any additional testing will be paid for by the Government if the test results for that area comply with specification requirements. Testing in these areas will be in addition to the lot testing, and the requirements for these areas will be the same as those for a lot.

3.11.4 Laboratory Air Voids

Laboratory air voids will be calculated by determining the Marshall density of each lab compacted specimen using ASTM D 2726 and determining the theoretical maximum density of every other sublot sample using ASTM D 2041. Laboratory air void calculations for each sublot will use the latest theoretical maximum density values obtained, either for that sublot or the previous sublot. The mean absolute deviation of the four laboratory air void contents (one from each sublot) from the JMF air void content will be evaluated. All laboratory air void tests will be completed and reported within 24 hours after completion of construction of each lot.

3.11.5 Mean Absolute Deviation

An example of the computation of mean absolute deviation for laboratory air voids is as follows: Assume that the laboratory air voids are determined from 4 random samples of a lot (where 3 specimens were compacted from each sample). The average laboratory air voids for each sublot sample are determined to be 3.5, 3.0, 4.0, and 3.7. Assume that the target air voids from the JMF is 4.0. The mean absolute deviation is then:

Mean Absolute Deviation = (|3.5 - 4.0| + |3.0 - 4.0| + |4.0 - 4.0| + |3.7 - 4.0|/4

= (0.5 + 1.0 + 0.0 + 0.3)/4 = (1.8)/4 = 0.45

The mean absolute deviation for laboratory air voids is determined to be 0.45.

3.11.6 In-place Density

3.11.6.1 General Density Requirements

For determining in-place density, one random core will be taken by the Contractor from the mat (interior of the lane) of each sublot, and one random core will be taken from the joint (immediately over joint) of each sublot. Each random core will be full thickness of the layer being placed. After air drying to a constant weight, cores obtained from the mat and

from the joints will be used for in-place density determination.

3.11.6.2 Mat and Joint Densities

The average in-place mat and joint densities are expressed as a percentage of the average Marshall density for the lot. The Marshall density for each lot will be determined as the average Marshall density of the four random samples (3 specimens compacted per sample). The average in-place mat density and joint density for a lot are determined and compared with Table 8 to determine acceptance per lot based on in-place density, as described below. The area associated with the joint is considered to be 10 feet wide times the length of completed longitudinal construction joint in the lot. This area will not exceed the total lot size. The length of joint to be considered will be that length where a new lane has been placed against an adjacent lane of hot-mix asphalt pavement, either an adjacent freshly paved lane or one paved at any time previously. All density results for a lot will be completed and reported within 24 hours after the construction of that lot.

Table 7. Acceptance Based on In-place Lot Density

Average Mat Density (4 Cores)	Average Joint Density (4 Cores)
97.9 or above	96.4 or above

3.11.7 Grade

The intermediate surface of pavement shall conform to the elevations and cross sections shown and shall vary not more than 0.05 feet from the plan grade established and approved at site of work. Skin patching for correcting low areas or planing or milling for correcting high areas will not be permitted.

3.11.8 Surface Smoothness

The Contractor shall use the following method to test and evaluate surface smoothness of the pavement. All testing shall be performed in the presence of the Contracting Officer. Detailed notes of the results of the testing shall be kept and a copy furnished to the Government immediately after each day's testing. Where drawings show required deviations from a plane surface (crowns, drainage inlets, etc.), the surface shall be finished to meet the approval of the Contracting Officer.

3.11.8.1 Smoothness Requirements

a. Straightedge Testing: The surfaces of the intermediate pavement shall be within the tolerances specified in Table 9 when checked with an approved 12 foot straightedge.

Table 8. Straightedge Surface Smoothness--Pavements

Pavement Category	Direction of Testing	Tolerance, inches
All paved areas	Longitudinal	3/8
	Transverse	3/8

3.11.8.2 Testing Method

After the final rolling, but not later than 24 hours after placement, the surface of the intermediate pavement in each entire lot shall be tested by the Contractor in such a manner as to reveal all surface irregularities exceeding the tolerances specified above. Separate testing of individual sublots is not required. If any pavement areas are ground, these areas shall be retested immediately after grinding. The entire area of the pavement shall be tested in both a longitudinal and a transverse direction on parallel lines. The transverse lines shall be 25 feet or less apart, as directed. The longitudinal lines shall be at the centerline of each paving lane for lines less than 20 feet and at the third points for lanes 20 feet or greater. Other areas having obvious deviations shall also be tested. Longitudinal testing lines shall be continuous across all joints.

a. Straightedge Testing. The straightedge shall be held in contact with the surface and moved ahead one-half the length of the straightedge for each successive measurement. The amount of surface irregularity shall be determined by placing the freestanding (unleveled) straightedge on the pavement surface and allowing it to rest upon the two highest spots covered by its length, and measuring the maximum gap between the straightedge and the pavement surface in the area between these two high points.

3.11.8.3 Surface Deviation

Any small individual area with surface deviation which exceeds the tolerance given above by more than 50 percent, shall be corrected by diamond grinding to meet the specification requirements above or shall be removed and replaced at no additional cost to the Government.

-- End of Section --

SECTION TABLE OF CONTENTS

DIVISION 02 - SITE WORK

SECTION 02745

BITUMINOUS SURFACE TREATMENT

PART 1 GENERAL

1.1 SCOPE OF WORK
1.1.1 Fog Seal
1.1.2 Chip Seal
1.1.3 Double Chip Seal
1.2 REFERENCES
1.3 MEASUREMENT
1.3.1 Surface Treatment Application Rates
1.4 BASIS FOR PAYMENT
1.5 SUBMITTALS
1.6 EQUIPMENT
1.6.1 General Requirements
1.6.2 Bituminous Distributors
1.6.3 Aggregate Spreader
1.6.4 Pneumatic-Tired Roller
1.6.5 Power Brooms and Power Blowers
1.6.6 Scales
1.6.7 Weighhouse
1.6.8 Storage Tanks
1.7 WEATHER LIMITATIONS
1.8 WAYBILLS AND DELIVERY TICKETS

PART 2 PRODUCTS

2.1 BITUMINOUS MATERIAL
2.2 MINERAL AGGREGATE
2.2.1 Coarse Aggregate
2.2.1.1 Film Retention
2.2.1.2 Particle Shapes
2.2.1.3 Weight Loss
2.2.1.4 Friable Particles
2.2.1.5 Crushed Aggregate
2.2.2 Fine Aggregate
2.3 ANTISTRIPPING AGENT

PART 3 EXECUTION

3.1 PREPARATION OF SURFACE
3.1.1 Masking
3.2 BITUMINOUS MATERIAL
3.2.1 Application Rate
3.2.1.1 Fog Seal
3.2.1.2 Single Chip Seal
3.2.1.3 Double Chip Seal
3.2.2 Application Temperature

3.2.3 Application of Bituminous Material
3.3 AGGREGATE
3.3.1 Application Rate and Aggregate Gradation
3.3.1.1 Single Chip Seal
3.3.1.2 Double Chip Seal
3.3.2 Application of Aggregate
3.4 ROLLING AND BROOMING
3.5 FIELD QUALITY CONTROL
3.5.1 Testing
3.5.1.1 Gradation
3.5.1.2 Abrasion Resistance
3.5.2 Bituminous Material
3.6 SAMPLING AND TESTING
3.6.1 General Requirements
3.6.2 Samples
3.6.3 Initial Sampling and Testing
3.6.3.1 Aggregates
3.6.3.2 Bituminous Materials
3.6.3.3 Calibration Test
3.6.3.4 Trial Application
3.6.4 Sampling and Testing During Construction
3.7 TRAFFIC CONTROL

-- End of Section Table of Contents --

SECTION 02745

BITUMINOUS SURFACE TREATMENT

PART 1 GENERAL

1.1 SCOPE OF WORK

This Section specifies the equipment, aggregate, and asphaltic emulsion for the placement of chip seals and fog seals. Slurry seals are specified in Section 02736, ASPHALT SLURRY SEAL.

1.1.1 Fog Seal

Fog seal coat shall consist of a mixture of rapid setting type asphaltic emulsion and additional water.

1.1.2 Chip Seal

Chip seal shall consist of an application of rapid setting asphaltic emulsion followed by an application of medium screenings (Gradation No. 2).

1.1.3 Double Chip Seal

Double chip seal shall consist of an application of rapid setting asphaltic emulsion followed by an application of coarse screenings(Gradation No. 1), and another application of rapid setting asphaltic emulsion followed by an application of fine screenings (Gradation No. 3).

1.2 REFERENCES

The publications listed below form a part of this specification to the extent referenced. The publications are referred to in the text by basic designation only.

AMERICAN SOCIETY FOR TESTING AND MATERIALS (ASTM)

ASTM C 29	(1991a) Unit Weight and Voids in Aggregate
ASTM C 131	(1996) Resistance to Degradation of Small-Size Coarse Aggregate by Abrasion and Impact in the Los Angeles Machine
ASTM C 136	(1996a) Sieve Analysis of Fine and Coarse Aggregates
ASTM C 142	(1978; R 1990) Clay Lumps and Friable Particles in Aggregates
ASTM D 75	(1987; R 1992) Sampling Aggregates
ASTM D 140	(1993) Sampling Bituminous Materials
ASTM D 977	(1991) Emulsified Asphalt
ASTM D 1250	(1980; R 1997) Petroleum Measurement Tables

ASTM D 2995	(1993) Determining Application Rate of Bituminous Distributors
ASTM D 3666	(1993) Minimum Requirements for Agencies Testing and Inspecting Bituminous Paving Materials
ASTM D 4791	(1995) Flat Particles, Elongated Particles, or Flat and Elongated Particles in Coarse Aggregate

1.3 MEASUREMENT

The bituminous material and aggregate to be paid for shall be based on the measured area of the accepted work. This section includes three different surface treatments, each of which require different application rates of bituminous and aggregate materials. The unit price is the measured square yard of the respective surface treatment; fog seal, chip seal or double chip seal.

1.3.1 Surface Treatment Application Rates

The application rate for the respective surface treatment shall be within those specified in paragraph 3.2.1 Application Rate. The minimum application rate must be met before the final yardage is totaled.

1.4 BASIS FOR PAYMENT

The surface area treated, measured to the nearest square yard, will be paid for at the respective contract unit prices for the particular option year Line Item _007, "Fog Seal" of the Pricing Schedule. There are no line items for Chip Seal or Double Chip Seal; if used, the item prices will require negotiation. Payment shall constitute full compensation for all operations necessary to complete the work as specified herein. No payment will be made for any materials used for calibration or testing, wasted or rejected materials, unused materials or materials used for the convenience of the Contractor, or for water used.

1.5 SUBMITTALS

Government approval is required for submittals with a "GA" designation; submittals having an "FIO" designation are for information only. The following shall be submitted in accordance with Section 01330 SUBMITTAL PROCEDURES:

SD-09 Reports

Tests; FIO.

Copies of the test results, within 24 hours of the completion of the test. Certified copies of the aggregate test results, not less than 30 days before the material is required in the work. Certified copies of the bituminous materials test reports indicating compliance with applicable specified requirements, not less than 30 days before the material is required in the work. A copy of the calibration test results, before the bituminous distributor and aggregate spreader are used on the job.

SD-18 Records

Waybills and Delivery Tickets; FIO.

Waybills and delivery tickets, during the progress of the work. Before the final statement is allowed, certified waybills and delivery tickets for all materials used in the work covered by this section shall be filed.

1.6 EQUIPMENT

1.6.1 General Requirements

Equipment, plant and tools used in the work shall be subject to approval and shall be maintained in a satisfactory working condition at all times. The equipment shall be adequate and shall have the capability of producing the results specified.

1.6.2 Bituminous Distributors

The distributor shall have pneumatic tires of sufficient size and number to prevent rutting, shoving, or otherwise damaging any part of the pavement structure. The distributor shall be designed and equipped to distribute the bituminous material in a uniform double or triple lap at the specified temperature, at readily determined and controlled rates with an allowable variation from the specified rate of not more than plus or minus 5 percent, and at variable widths. Distributor equipment shall include a separate power unit for the bitumen pump, full-circulation spray bars, tachometer, pressure gauges, volume-measuring devices, adequate heaters for heating of materials to the proper application temperature, a thermometer for reading the temperature of tank contents, and a hand-held hose attachment suitable for applying bituminous material manually to areas inaccessible to the distributor. The distributor shall be equipped to circulate and agitate the bituminous material during the heating process.

1.6.3 Aggregate Spreader

The aggregate-spreading equipment shall be adjustable and capable of uniformly spreading aggregate at the specified rate in a single-pass operation over the surface to be sealed.

1.6.4 Pneumatic-Tired Roller

The pneumatic-tired roller shall be of sufficient size to seat the cover aggregate into the bituminous material without fracturing the aggregate particles.

1.6.5 Power Brooms and Power Blowers

Power brooms and power blowers shall be suitable for cleaning surfaces to which the seal coat is to be applied.

1.6.6 Scales

The scales shall be of sufficient size and capacity to accommodate all trucks used in hauling aggregates. All scales shall be tested and approved by an inspector of the state inspection bureau charged with scales inspection within the state in which the project is located. If an official of the inspection bureau is not available, the scales shall be tested in accordance with the state specifications by the Contractor in the presence of the Contracting Officer. The Contractor shall have the

necessary number of standard weights on hand at all times for testing the scales.

1.6.7 Weighhouse

The weighhouse shall be weatherproof and shall be constructed in a manner that will afford adequate protection for the recording devices on the scales. The weighhouse shall be of a suitable size with one sliding window facing the scales platform, one end window, and a desk-type area at least 2 feet wide by 6 feet long.

1.6.8 Storage Tanks

Tanks shall be capable of heating the bituminous material, under effective and positive control at all times, to the required temperature. Heating shall be accomplished by steam coils, hot oil, or electricity. An armored thermometer shall be affixed to the tank so that the temperature of the bituminous material may be read at all times.

1.7 WEATHER LIMITATIONS

The seal coat shall be applied when the existing surface is dry, and when the weather is not foggy or rainy. The seal coat shall not be applied when the atmospheric temperature is below 60 degrees F in the shade, when the pavement surface temperature is below 50 degrees F, or when the wind velocity will prevent the uniform application of the bitumen or aggregates.

1.8 WAYBILLS AND DELIVERY TICKETS

The Contractor shall not remove bituminous material from the tank car or storage tank until measurements of the remaining quantity have been taken.

PART 2 PRODUCTS

2.1 BITUMINOUS MATERIAL

Bituminous material shall be an asphaltic emulsion conforming to ASTM D 977, grade RS-2.

2.2 MINERAL AGGREGATE

Aggregate shall consist of crushed stone, crushed gravel, sand and screenings. The moisture content of the aggregate shall be such that the aggregate will readily bond with the bituminous material. Drying may be required, as directed. The aggregate shall conform to the gradation shown in TABLE I. The aggregate gradation shall be allowed the tolerances given in TABLE II.

TABLE I. AGGREGATE GRADATIONS

(Percent by Weight Passing Square-Mesh Sieves)

Sieve Size	Gradation No. 1	Gradation No. 2	Gradation No. 3
3/4 in.	100	--	--
1/2 in.	95-100	100	--

TABLE I. AGGREGATE GRADATIONS

(Percent by Weight Passing Square-Mesh Sieves)

Sieve Size	Gradation No. 1	Gradation No. 2	Gradation No. 3
3/8 in.	50-80	90-100	100
No. 4	0-15	5-30	60-85
No. 8	0-5	0-10	0-25
No. 16	--	0-5	0-5
No. 30	--	--	0-3
No. 200	0-2	0-2	0-2

TABLE II. AGGREGATE GRADATION TOLERANCES

Material	Tolerances
Aggregate passing the 3/8-in. sieve and larger sieves	Plus or minus 5 percent
Aggregate passing the No. 4 and smaller sieves	Plus or minus 3 percent

2.2.1 Coarse Aggregate

Coarse aggregate shall consist of clean, sound, durable particles meeting the following requirements.

2.2.1.1 Film Retention

The aggregate shall exhibit not less than 95 percent retention of bituminous film.

2.2.1.2 Particle Shapes

The quantity of flat and elongated particles on any sieve shall not exceed 20 percent by weight when determined in accordance with ASTM D 4791.

2.2.1.3 Weight Loss

The percent weight loss shall not exceed 40 after 500 revolutions, as determined in accordance with ASTM C 131.

2.2.1.4 Friable Particles

The amount of friable particles shall not exceed 0.1 percent of the total weight of aggregate sample when tested in accordance with ASTM C 142.

2.2.1.5 Crushed Aggregate

Crushed aggregate retained on the No. 4 sieve and each coarser sieve shall contain at least 75 percent by weight of crushed pieces having one or more fractured faces with the area of each face equal to at least 75 percent of the smaller mid sectional area of the aggregate particle. When two fractures are contiguous, the angle between the planes of fractures shall

be at least 30 degrees to count as two fractured faces.

2.2.2 Fine Aggregate

Fine aggregate shall consist of clean, sound, durable particles. The aggregate shall meet the requirements for stripping, abrasion resistance and percent friable particles as specified for coarse aggregate.

2.3 ANTISTRIPPING AGENT

The use of an antistripping agent is subject to prior approval by the Contracting Officer.

PART 3 EXECUTION

3.1 PREPARATION OF SURFACE

Prior to applying the seal coat, damaged pavement shall be repaired and cracks filled. Immediately before applying the seal coat, all loose material, dirt, clay, or other objectionable material shall be removed from the surface to be sealed. Material removed from the surface shall not be mixed with the cover aggregate.

3.1.1 Masking

Prior to the application of bituminous material, all manholes, valve boxes, and any other surface utility appurtenances shall be covered with paper to prevent coating and obliteration. Locations shall be marked for unmasking after set-up. Masking paper shall be removed prior to opening the area to traffic.

3.2 BITUMINOUS MATERIAL

3.2.1 Application Rate

The bituminous material shall be spread in the quantities shown in TABLE III. The exact quantities within the range specified, which may be varied to suit field conditions, will be determined by the Contractor and approved by the Contracting Officer prior to use.

TABLE III. APPLICATION OF MATERIAL

(Quantities Per Square Yard)

Gradation No.	Bitumen, gallons	Aggregate, pounds
1	0.15-0.20	15-20
2	0.10-0.15	10-15
3	0.10-0.15	10-15

3.2.1.1 Fog Seal

Fog seal asphaltic emulsion (grade RS-2) shall be applied at a rate of 0.05 to 0.10 gallons per square yard.

3.2.1.2 Single Chip Seal

Asphaltic emulsion (grade RS-2) for single chip seal shall be applied at a rate of 0.25 to 0.40 gallons per square yard.

3.2.1.3 Double Chip Seal

Asphaltic Emulsion (grade RS-2) shall be applied at a rate of 0.20 to 0.35 gallons per square yard for the first application. Asphaltic emulsion (grade RS-2) shall be applied at a rate of 0.20 to 0.30 gallons per square yard for the second application.

3.2.2 Application Temperature

Asphalt application temperature shall provide an application viscosity between 10 and 60 seconds, Saybolt Furol, or between 20 and 120 centistokes, kinematic. The temperature viscosity relation shall be furnished to the Contracting Officer.

3.2.3 Application of Bituminous Material

Following the preparation and inspection of the pavement surface, the seal coat material shall be applied at the specified rates. The bituminous material shall be uniformly applied in a single pass of the distributor and with either a double or triple lap spray over the surface to be sealed. Building paper shall be spread on the surface for a sufficient distance back from the ends of each application so that flow through the spray bar may be started and stopped on the paper and so that all sprays will be operating at the proper pressure on the surface to be sealed. Immediately after the application, the building paper shall be removed. Spots missed by the distributor shall be properly treated with bituminous material.

3.3 AGGREGATE

3.3.1 Application Rate and Aggregate Gradation

The aggregate shall be spread immediately after the application of asphaltic emulsion. The exact quantities within the range specified, which may be varied to suit field conditions, will be determined by the Contractor, and approved by the Contracting Officer prior to use. The aggregate weights are those of aggregate having a specific gravity of 2.65. If the specific gravity of the aggregate to be used is less than 2.55 or greater than 2.75, adjustments shall be made in the number of poundsof aggregate required per square yard to insure a constant volume of aggregate per square yard of treatment.

3.3.1.1 Single Chip Seal

Aggregate meeting the Gradation No. 2 of Table I - Aggregate Gradation shall be spread at a rate of 20 to 30 pounds per square yard.

3.3.1.2 Double Chip Seal

Aggregate meeting the Gradation No. 1 of Table I - Aggregate Gradation shall be spread at a rate of 23 to 30 pounds per square yard for the first application. Aggregate meeting Gradation No. 3 shall be spread at a rate of 12 to 20 pounds per square yard for the second application.

3.3.2 Application of Aggregate

The specified quantity of cover aggregate shall be spread uniformly over the bituminous material. Before the bituminous material is applied, sufficient aggregate to cover the distributor load of bituminous material shall be on trucks at the site of the work. No bituminous material shall be down more than 3 minutes before it is covered with aggregate. Spreading shall be done uniformly with aggregate-spreading equipment. Trucks spreading aggregate shall be operated backwards, covering the bituminous material ahead of the truck wheels. Areas having insufficient cover shall be lightly recovered with additional aggregate by hand during the operations whenever necessary.

3.4 ROLLING AND BROOMING

Immediately following the application of cover aggregate, rolling operations shall begin. Rolling shall be accomplished with pneumatic-tired rollers. The rollers shall be operated at a speed that will not displace the aggregate. Rolling shall continue until the aggregate is uniformly distributed and keyed into the bituminous material. All surplus aggregate shall be swept off the surface and removed not less than 24 hours nor more than 4 days after rolling is completed.

3.5 FIELD QUALITY CONTROL

3.5.1 Testing

Field tests shall be performed in sufficient numbers to assure that the specifications are being met. Testing shall be the responsibility of the Contractor and shall be performed by an approved commercial laboratory. The following number of tests, if performed at the appropriate time, will be the minimum acceptable for each type of operation.

3.5.1.1 Gradation

Gradation tests shall be performed in accordance with ASTM C 136. A minimum of one gradation shall be performed for every 1000 tons, or portion thereof, of aggregate to be placed, with a minimum of three gradations for each day's run. When the source of materials is changed or deficiencies are found, the gradation shall be repeated and the material already placed shall be retested to determine the extent of the unacceptable material. All in-place unacceptable material shall be replaced at no additional expense to the Government.

3.5.1.2 Abrasion Resistance

Abrasion resistance tests shall be performed in accordance with ASTM C 131. One test shall be performed for every 1000 tons, or portion thereof, of aggregate placed. When the source of materials is changed or deficiencies are found, the abrasion testing shall be repeated and the material already placed shall be retested to determine the extent of the unacceptable material. All in-place unacceptable material shall be replaced at no additional expense to the Government.

3.5.2 Bituminous Material

A sample of the bituminous material used will be obtained by the Contractor under the supervision of the Contracting Officer. The sample will be retained by the Government.

3.6 SAMPLING AND TESTING

3.6.1 General Requirements

Sampling and testing shall be performed by an approved commercial testing laboratory or by facilities furnished by the Contractor. Facilities, equipment, and testing personnel shall meet the requirements outlined in ASTM D 3666 and no work requiring testing will be permitted until the facilities have been inspected and approved. The first inspection shall be at the expense of the Government. Costs incurred for any subsequent inspection will be charged to the Contractor. Tests shall be performed in sufficient numbers and at the location and times directed to ensure that the materials meet specified requirements.

3.6.2 Samples

Aggregate samples for laboratory tests shall be taken in accordance with ASTM D 75. Samples of bituminous material shall be taken in accordance with ASTM D 140.

3.6.3 Initial Sampling and Testing

3.6.3.1 Aggregates

Sources from which aggregates are to be obtained shall be selected and notification thereof furnished the Contracting Officer within 15 days after the award of the Contract. Tests for the evaluation of aggregates shall be made by an approved commercial laboratory at no expense to the Government. Tests for determining the suitability of aggregate shall include, but not limited to: gradation in accordance with ASTM C 136, abrasion resistance in accordance with ASTM C 131, clay lumps and friable particles in accordance with ASTM C 142, unit weight and voids in accordance with ASTM C 29, and flat and elongated particles in accordance with ASTM D 4791. The use of an antistripping agent is subject to approval by the Contracting Officer.

3.6.3.2 Bituminous Materials

Sources from which bituminous materials are to be obtained shall be selected and notification thereof furnished the Contracting Officer within 15 days after the award of the contract.

3.6.3.3 Calibration Test

The Contractor shall furnish all equipment and materials and labor necessary to calibrate the bituminous distributor and the aggregate spreader. All calibrations shall be made with the approved job materials and prior to applying the seal coat materials to the prepared surface. Calibration of the bituminous distributor shall be in accordance with ASTM D 2995.

3.6.3.4 Trial Application

Prior to applying the seal coat, a test section at least 100 feet long by 20 feet wide shall be placed by the Contractor using the approved job materials. The materials shall be placed and rolled in accordance with the specified requirements. Tests shall be made to determine the application rates of the bitumen and aggregate. If the test indicates that the seal coat test section does not conform to the specification requirements,

necessary adjustments to the application equipment and to the spreading and rolling procedures shall be made, and additional test sections shall be constructed for conformance to the specifications. Where test sections do not conform to specification requirements, seal coat shall be removed at no expense to the Government; no separate payment will be made for seal coat materials and labor, either in placement or removal of any test section.

3.6.4 Sampling and Testing During Construction

Quality control sampling and testing shall be performed as required in paragraph FIELD QUALITY CONTROL.

3.7 TRAFFIC CONTROL

Contractor shall sweep loose chips as necessary to prevent flying object damage to vehicular traffic. Additionally, the Contractor shall provide appropriate signage or traffic control as necessary to prevent flying object damage to vehicular traffic. Contractor shall protect freshly placed seal coats from damage by traffic.

-- End of Section --

SECTION TABLE OF CONTENTS

DIVISION 02 - SITE WORK

SECTION 02746

RESIN MODIFIED PAVEMENT SURFACING MATERIAL

PART 1 GENERAL

1.1 REFERENCES
1.2 SUBMITTALS
1.3 Measurement
1.4 Payment
1.5 PLANT, EQUIPMENT, MACHINES, AND TOOLS
1.6 SAMPLING AND TESTING
1.6.1 Aggregates
1.6.1.1 General
1.6.1.2 Sources
1.6.2 Bituminous Materials
1.7 DELIVERY, STORAGE, AND HANDLING OF MATERIALS
1.7.1 Mineral Aggregates
1.7.2 Bituminous Materials
1.8 ACCESS TO PLANT AND EQUIPMENT

PART 2 PRODUCTS

2.1 AGGREGATE
2.1.1 Coarse Aggregate
2.1.2 Crushed Aggregates
2.1.3 Open Graded Mix Aggregate
2.1.4 Slurry Grout Sand
2.1.5 Filler
2.2 BITUMINOUS MATERIAL
2.3 CEMENT
2.4 CROSS POLYMER RESIN
2.5 CURING COMPOUND
2.6 JOB MIX FORMULA AND COMPOSITION OF SLURRY GROUT
2.6.1 Job Mix Formula
2.6.2 Composition of Slurry Grout

PART 3 EXECUTION

3.1 WEATHER LIMITATIONS
3.2 PREPARATION OF MIXTURES
3.3 WATER CONTENT OF AGGREGATES
3.4 STORAGE OF MIXTURE
3.5 TRANSPORTATION OF MIXTURE
3.6 TEST SECTION
3.7 SURFACE PREPARATION OF UNDERLYING COURSE
3.8 TACK COATING
3.9 PLACING OPEN GRADED BITUMINOUS MIXTURE
3.9.1 Rollers
3.9.2 Smoothing of Open Graded Bituminous Mixture
3.9.3 Protection of Ungrouted Pavement
3.10 PREPARATION OF SLURRY GROUT

3.11 PLACING SLURRY GROUT
3.12 JOINTS
3.12.1 Joints Between Successive Lanes of RMP
3.12.2 Joints Between RMP and Adjacent Pavements
3.13 CURING
3.14 PROTECTION OF GROUTED PAVEMENT
3.15 ACCEPTABILITY OF WORK
3.15.1 General
3.15.2 Field Sampling of RMP Materials
3.15.2.1 Open Graded Bituminous Mixture
3.15.2.2 Slurry Grout
3.15.2.3 Core Samples
3.15.3 Thickness and Surface-Smoothness Requirements
3.15.3.1 Thickness
3.15.3.2 Surface Smoothness

-- End of Section Table of Contents --

SECTION 02746

RESIN MODIFIED PAVEMENT SURFACING MATERIAL

PART 1 GENERAL

1.1 REFERENCES

The publications listed below form a part of this specification to the extent referenced. The publications are referred to in the text by basic designation only.

AMERICAN SOCIETY FOR TESTING AND MATERIALS (ASTM)

ASTM C 88	(1990) Soundness of Aggregates by Use of Sodium Sulfate or Magnesium Sulfate
ASTM C 131	(1989) Resistance to Degradation of Small-Size Coarse Aggregate by Abrasion and Impact in the Los Angeles Machine
ASTM C 136	(1995a) Sieve Analysis of Fine and Coarse Aggregates
ASTM C 150	(1995) Portland Cement
ASTM C 618	(1994a) Coal Fly Ash and Raw or Calcined Natural Pozzolan for Use as a Mineral Admixture in Portland Cement Concrete
ASTM D 75	(1987; R 1992) Sampling Aggregates
ASTM D 140	(1993) Sampling Bituminous Materials
ASTM D 2216	(1992) Laboratory Determination of Water (Moisture) Content of Soil, and Rock
ASTM D 3381	(1992) Viscosity-Graded Asphalt Cement for Use in Pavement Construction
ASTM D 4791	(1995) Flat or Elongated Particles in Course Aggregate

CORPS OF ENGINEERS (COE)

COE CRD-C 300	(1990) Specifications for Membrane-Forming Compounds for Curing Concrete

1.2 SUBMITTALS

Government approval is required for submittals with a "GA" designation; submittals having an "FIO" designation are for information only. The following shall be submitted in accordance with Section 01300 SUBMITTAL PROCEDURES:

SD-09 Reports

Coarse and Fine Aggregate; GA. Open Graded Mix Aggregate Gradation; GA. Bituminous Material; GA. Slurry Grout Sand; GA. Fly Ash; GA. Slurry Grout Formula; GA.

Copies of test results. Viscosity tests shall be run after mixing and 15 minutes and 30 minutes thereafter.

SD-13 Certificates

Cement; GA. Cross Polymer Resin; GA. Curing Compound; GA.

Copies of certificates.

SD-14 Samples

Open Graded Mix; GA. Slurry Grout Job-Mix-Formula; GA.

Materials required to produce the open graded mixture and slurry grout job-mix-formulas in the quantities indicated below.

Aggregates representing each stockpile to be used in the production of the open graded mixture	100 pounds each.
Bituminous Material	5 gallons
Slurry Grout Sand	50 pounds
Fly Ash	50 pounds
Cement	50 pounds
Cross Polymer Resin	1 gallon

Samples shall be delivered, along with the Contractor's preliminary job mix formulas 60 days before starting production to Waterways Experiment Station, 3909 Halls Ferry Road, Vicksburg, Mississippi, 39180-6199, ATTN: CEWES-GP-Q.

1.3 Measurement

The quantity of 2-inch thick resin-modified pavement surfacing material completed and accepted as determined by the Contracting Officer shall be measured in square yards.

1.4 Payment

Quantities of resin-modified pavement surfacing material, determined as specified in paragraph Measurement, will be paid for at the base year unit price for Line Item 0001AR, "2" RESIN MODIFIED PAVEMENT", which shall constitute full compensation for the construction and completion of the resin-modified pavement.

1.5 PLANT, EQUIPMENT, MACHINES, AND TOOLS

The bituminous plant shall be of such capacity as to produce the quantities of bituminous mixtures required for the project. Hauling equipment, paving machines, rollers, miscellaneous equipment, and tools shall be provided in sufficient numbers and capacity and in proper working condition to place the bituminous paving mixtures at a rate equal to the plant output. The additional requirements for construction of the Resin Modified Pavement (RMP) are a concrete batch plant, a ready mix truck or portable mixer for

grout mixing, and a small 5-ton tandem steel wheeled vibratory roller for compaction.

1.6 SAMPLING AND TESTING

1.6.1 Aggregates

1.6.1.1 General

ASTM D 75 shall be used in sampling coarse and fine aggregates. Points of sampling will be designated by the Contracting Officer. All tests necessary to determine compliance with the specified requirements shall be made by the Contractor.

1.6.1.2 Sources

Sources of aggregates shall be selected well in advance of the time that the materials are required in the work. Samples shall be submitted 60 days before starting production. If a sample of material fails to meet specification requirements, the material represented by the sample shall be replaced, and the cost of testing the replaced sample shall be at the expense of the Contractor. Approval of the source of the aggregate does not relieve the Contractor of the responsibility to deliver aggregates that meet the specified requirements.

1.6.2 Bituminous Materials

Samples of bituminous materials shall be obtained in accordance with ASTM D 140. Sources shall be selected in advance of the time materials will be required for the work. In addition to the initial qualification testing of bituminous materials, samples shall be obtained and tested before and during construction when shipments of bituminous materials are received, or when necessary to assure that some condition of handling or storage has not been detrimental to the bituminous material.

1.7 DELIVERY, STORAGE, AND HANDLING OF MATERIALS

1.7.1 Mineral Aggregates

Mineral aggregates shall be delivered to the site of the bituminous mixing plant and stockpiled in such a manner as to preclude segregation or contamination with objectionable material.

1.7.2 Bituminous Materials

Bituminous materials shall be maintained below a temperature of 300 degrees F during storage and shall not be heated by the application of a direct flame to the walls of storage tanks or transfer lines. Storage tanks, transfer lines and weigh buckets shall be thoroughly cleaned before a different type or grade of bitumen is introduced into the system.

1.8 ACCESS TO PLANT AND EQUIPMENT

The Contracting Officer shall have access at all times to all parts of the bituminous plant for checking adequacy of any equipment in use; inspecting operation of the plant; verifying weights, proportions, and character of materials; and checking temperatures maintained in preparation of the mixtures.

PART 2 PRODUCTS

2.1 AGGREGATE

Aggregate shall consist of crushed stone, or crushed gravel without sand or other inert finely divided mineral aggregate. Aggregate meeting the specified requirements herein can be obtained from on-post aggregate sources or off-post sources. The portion of materials retained on the No. 4 sieve shall be known as coarse aggregate, the portion passing the No. 4 sieve and retained on the No. 200 sieve as fine aggregate. Sieve analysis of coarse and fine aggregates shall be conducted in accordance with ASTM C 136.

2.1.1 Coarse Aggregate

Coarse aggregate shall consist of sound, tough, durable particles, free from adherent films of matter that would prevent thorough coating with the bituminous material. The percentage of wear shall not be greater than 40 percent when tested in accordance with ASTM C 131. The sodium sulfate soundness loss shall not exceed 9 percent, after five cycles, when tested in accordance with ASTM C 88. Aggregate shall contain at least 70 percent by weight of crushed pieces having 2 or more fractured faces. The area of each fractured face shall be equal to at least 75 percent of the smallest mid-sectional area of the piece. When 2 fractured faces are contiguous, the angle between the planes of fractures shall be at least 30 degrees to count as 2 fractured faces. Fractured faces shall be obtained by artificial crushing.

2.1.2 Crushed Aggregates

Particle shape of crushed aggregates shall be essentially cubical. Quantity of flat and elongated particles in any sieve size shall not exceed 8 percent by weight, when determined in accordance with ASTM D 4791.

2.1.3 Open Graded Mix Aggregate

The gradations in Table I represent the limits which shall determine the suitability of open graded mix aggregate for use from the sources of supply. The aggregate selected, shall have a gradation within the limits designated in Table I and shall not vary from the low limit on one sieve to the high limit on the adjacent sieve, or vice versa, but shall be uniformly graded from coarse to fine.

TABLE I

OPEN GRADED MIX AGGREGATE

Sieve Size	Percent by Weight Passing
3/4 in.	100
1/2 in.	54-76
3/8 in.	38-60
No. 4	10-26
No. 8	8-16
No. 30	4-10
No. 200	1-3

TABLE I

OPEN GRADED MIX AGGREGATE

Table I is based on aggregates of uniform specific gravity; the percent passing various sieves may be changed by the Contracting Officer when aggregates of varying specific gravities are used. Adjustments of percentages passing various sieves may be directed by the Contracting Officer when aggregates vary more than 0.2 in specific gravity.

2.1.4 Slurry Grout Sand

Slurry grout sand shall consist of clean, sound, durable, angular particles of silica sand that meets the requirements for wear and soundness specified for coarse aggregate. The sand particles shall be free from coatings of clay, silt, or other objectionable matter and shall contain no clay balls. The gradations in Table II represent the limits which shall determine the suitability of silica sand for use from the sources of supply.

TABLE II

FINE SAND FOR SLURRY GROUT

Sieve Size	Percentage by Weight Passing Sieves
No. 16	100
No. 30	95-100
No. 200	0-2

The sand gradations shown are based on sand of uniform specific gravity, and the percentages passing the various sieves will be subject to appropriate correction by the Contracting Officer when aggregates of varying specific gravities are used.

2.1.5 Filler

If filler in addition to that naturally present in the aggregate is necessary, it shall be fly ash. Fly ash shall have at least 95 percent by weight of material passing the No. 200 sieve. Fly ash shall conform to ASTM C 618 Class F, with a limit on the calcium oxide content of 5 percent by weight maximum. The chemical composition of the filler shall conform to the cross polymer resin manufacturer's recommendations, unless otherwise approved by the Government.

2.2 BITUMINOUS MATERIAL

Bituminous material shall conform to the requirements of ASTM D 3381 and shall be of the viscosity grade AR-4000 with an original penetration of 40 to 70.

2.3 CEMENT

The cement used in the slurry grout shall be portland cement conforming to ASTM C 150, Type II, low alkali.

2.4 CROSS POLYMER RESIN

A cross polymer resin of styrene and butadiene, Prosalvia L7, as manufactured and distributed by the Alyan Corporation, P.O. Box 788, Vienna, VA 22183, (703) 573-8134 shall be utilized as a plasticizing and strength producing agent. After mixing the resin into the slurry grout, the mixture shall have a viscosity which would allow it to flow from a Marsh Cone in accordance with Table III. A Marsh cone has dimensions of 155 mm base inside diameter, tapering 315 mm to a tip inside diameter of 10 mm. The 10 mm diameter neck shall have a length of 60 mm.

TABLE III

SLURRY GROUT VISCOSITY

Time Elapsed After Mixing	Viscosity
After 0 minutes	7 to 9 seconds
After 15 minutes	8 to 10 seconds
After 30 minutes	9 to 11 seconds

2.5 CURING COMPOUND

Membrane-forming curing compound shall be white pigmented compounds conforming to COE CRD-C 300.

2.6 JOB MIX FORMULA AND COMPOSITION OF SLURRY GROUT

2.6.1 Job Mix Formula

The Job Mix Formula (JMF) for the open graded bituminous mixture will be furnished by the Government. No payment will be made for mixtures produced prior to the approval of the JMF by the Contracting Officer. The JMF will indicate the percentage of each stockpile, the percentage passing each sieve size, the percentage of bitumen, and the temperature of the completed mixture when discharged from the mixer. The tolerances given in Table IV for sieve analysis, bitumen content, and temperature shall be applied to quality control test results on the open graded bituminous mixture as discharged from the mixing plant.

TABLE IV

JOB-MIX-FORMULA TOLERANCES

Material	Tolerance, Plus or Minus
Aggregate passing No. 4 or larger sieves	4 percent
Aggregate passing Nos. 8 and 30 sieves	3 percent
Aggregate passing No. 200 sieve	1 percent
Bitumen	0.20 percent
Temperature of discharged mix	20 degrees F

2.6.2 Composition of Slurry Grout

The Job Mix Formula (JMF) for the slurry grout will be finished by the Government. The slurry grout job-mix-formula will be developed using the

proportions given in Table V.

TABLE V

RESIN MODIFIED CEMENT SLURRY GROUT MIXTURE PROPORTIONS

	Percent by Weight
Silica Sand	16-20
Fly Ash	16-20
Water	22-26
Type I Cement	34-40
Cross Polymer Resin	2.5-3.5

Approximately 22 pounds to 28 pounds of mixed slurry grout will fill in one square yard (1 inch thickness) of open graded bituminous mixture with 25 to 35 percent voids total mix.

PART 3 EXECUTION

3.1 WEATHER LIMITATIONS

The bituminous mixture shall not be placed upon a wet surface, in rain, or when the surface temperature of the underlying course is less than 50 degrees F. The temperature requirements may be waived by the Contracting Officer. Once the bituminous mixture has been placed and if rain is imminent, protective materials, consisting of rolled polyethylene sheeting at least 4 mils thick of sufficient length and width to cover the mixture shall be placed. If the open graded bituminous mixture becomes saturated, the Contractor shall allow the pavement voids to thoroughly dry out prior to applying the slurry grout.

3.2 PREPARATION OF MIXTURES

Rates of feed of aggregates shall be regulated so that moisture content and temperature of aggregates will be within tolerances specified. Aggregates and bitumen shall be conveyed into the mixer in proportionate quantities required to meet the JMF. Mixing time shall be as required to obtain a uniform coating of the aggregate with the bituminous material. Temperature of bitumen at time of mixing shall not exceed 275 degrees F. Temperature of aggregate in the mixer shall not exceed 300 degrees F when bitumen is added. Overheated and carbonized mixtures or mixtures that foam shall not be used.

3.3 WATER CONTENT OF AGGREGATES

Drying operations shall reduce the water content of mixture to less than 0.75 percent. Water content shall be determined in accordance with ASTM D 2216; weight of sample shall be at least 500 grams. The water content shall be reported as a percentage of the total mixture.

3.4 STORAGE OF MIXTURE

The open graded bituminous mixture shall not be stored for longer than one hour prior to hauling to the jobsite.

3.5 TRANSPORTATION OF MIXTURE

Transportation from the mixing plant to the jobsite shall be in trucks having tight, clean, smooth beds lightly coated with an approved releasing agent to prevent adhesion of mixture to truck bodies. Diesel fuel shall not be used as a releasing agent. Excessive release agent shall be drained prior to loading. Each load shall be covered with canvas or other approved material of ample size to protect mixture from the weather and to prevent loss of heat. Loads that have crusts of cold, unworkable material or have become wet will be rejected. Hauling over freshly placed material will not be permitted.

3.6 TEST SECTION

Prior to full production, and in the presence of the Contracting Officer, the Contractor shall prepare and place a quantity of open graded bituminous mixture and slurry grout according to the JMF. The test section shall be a minimum of 100 feet long and 20 feet wide placed in one section and shall be of the same depth specified for the construction of the course which it represents. The underlying pavement structure upon which the test section is to be constructed shall be the test section of the intermediate course. The equipment used in construction of the test section shall be the same type and weight to be used on the remainder of the course represented by the test section. The test section shall meet the requirements specified in paragraph ACCEPTABILITY OF WORK. If the test section should fail to meet these requirements, the necessary adjustments to the mix design, plant operation, and/or construction procedures shall be made. Additional test sections, as required, shall be constructed and evaluated for conformance to the specifications at the expense of the Contractor.

3.7 SURFACE PREPARATION OF UNDERLYING COURSE

Prior to placing of open graded bituminous mixture, the underlying course shall be cleaned of all foreign or objectionable matter with power brooms and hand brooms.

3.8 TACK COATING

Contact surfaces of previously constructed pavement shall be sprayed with a coat of bituminous material as specified in Section 02558 BITUMINOUS TACK COAT.

3.9 PLACING OPEN GRADED BITUMINOUS MIXTURE

The mix shall be placed at a temperature of not less than 175 degrees F Upon arrival, the mixture shall be spread to the full width (minimum 10 feet) by an approved bituminous paver. It shall be struck off in a uniform layer of such depth that, when the work is completed, it shall have the required thickness indicated. The speed of the paver shall be regulated to eliminate pulling and tearing of the bituminous mat. Unless otherwise directed, placement of the mixture shall begin along the center line of a crowned pavement or along the highest side of a sloped cross-section. The mixture shall be placed in consecutive adjacent strips. On areas where irregularities or unavoidable obstacles make the use of mechanical spreading and finishing equipment impractical, the mixture may be spread, raked, and luted by hand tools.

3.9.1 Rollers

Small (3-ton maximum) tandem steel wheel vibratory rollers shall be used to

smooth over the surface of freshly placed open graded bituminous mixture. The vibratory unit shall be turned off during smoothing of the bituminous mixture. Rollers shall be in good condition, capable of operating at slow speeds to avoid displacement of the bituminous mixture. The number, type, and weight of rollers shall be sufficient to roll the mixture to the voids per total mix requirement of 25 to 35 percent while it is still in a workable condition. The use of equipment which causes excessive crushing of the aggregate will not be permitted.

3.9.2 Smoothing of Open Graded Bituminous Mixture

The open graded bituminous mixture shall be smoothed with one to three passes of the prescribed roller without vibration. The temperature of the freshly placed open graded bituminous mixture shall be low enough to prevent excessive shoving or cutting of the mat under the roller.

3.9.3 Protection of Ungrouted Pavement

The Contractor shall protect the ungrouted pavement and its appurtenances against contamination from mud, dirt, wind blown debris, waterborne material, or any other contamination which could enter the void spaces of the open graded bituminous mixture before grout application. Protection against contamination shall be accomplished by keeping the construction site clean and free of such contaminants and by covering the ungrouted pavement with protective materials when directed by the Contracting Officer. Such protective materials shall consist of rolled polyethylene sheeting as described in paragraph WEATHER LIMITATIONS. The sheeting may be mounted on either the paver or a separate movable bridge from which it can be unrolled without dragging over the pavement surface.

3.10 PREPARATION OF SLURRY GROUT

The slurry grout shall be mixed using a batch plant, portable mixer and/or ready-mix truck and according to mix proportions stated in the Government's JMF. The cross polymer resin shall be added to the mixture after all other ingredients have been thoroughly mixed. When using ready-mix trucks for transporting slurry grout, the grout mixture shall be thoroughly mixed at the jobsite immediately before application for a minimum of 10 minutes. Thorough mixing shall be accomplished by rotating the mixing drum at the maximum allowable revolutions per minute.

3.11 PLACING SLURRY GROUT

Temperature of the bituminous mixture shall be less than 100 degrees F before applying grout. Each batch of slurry grout shall be tested at the jobsite immediately before placement and shall be used in the finished product only if it meets the requirements specified in paragraph ACCEPTABILITY OF WORK. The slurry grout shall be spread over the bituminous mixture using a spreader or squeegees. The application of the slurry grout shall be sufficient to fill the internal voids of the open graded bituminous mixture. The grouting operation shall begin at the lowest side of the sloped cross-section and proceed from the low side to the high side. The practical limit for the surface slope of an RMP section is 2 percent. Pavement slopes up to 5 percent can be constructed, but excess hand work and grout overruns are to be expected at slopes greater than 2 percent. The slurry grout shall be placed in successive paving lanes with a maximum width of 20 feet. The use of 2-inch by 4-inch strips of lumber as wooden battens separating each of the grouting lanes and the RMP from adjacent pavements is optional. The direction of the

grouting operation shall be the same as used to pave the open graded bituminous mixture. The small (3-ton maximum) tandem steel wheel roller (vibratory mode) passing over the grout covered bituminous mixture shall be used to promote full penetration of the slurry grout into the void spaces.

3.12 JOINTS

3.12.1 Joints Between Successive Lanes of RMP

Joints between successive lanes of RMP shall be made in such a manner as to ensure a continuous bond between the paving lanes. All RMP joints shall have the same texture, density, and smoothness as other sections of the course.

3.12.2 Joints Between RMP and Adjacent Pavements

Joints between the RMP and any surrounding pavement surfaced with bituminous concrete or portland cement concrete shall be saw cut to one-half of the RMP thickness and filled with a joint sealant material approved by the Contracting Officer.

3.13 CURING

The curing compound shall be applied to the finished pavement surface within 2 hours of the completed slurry grout application. The curing compound shall be applied by means of an approved pressurized spraying machine. Application of the curing compound shall be made in one or two coats with a total application rate of not more than 400 square feet per gallon.

3.14 PROTECTION OF GROUTED PAVEMENT

The Contractor shall protect the pavement and its appurtenances against both public traffic and traffic caused by the Contractor's employees and agents for a period of 28 days. Any damage to the pavement occurring prior to final acceptance shall be repaired or the pavement replaced at the Contractor's expense. In order that the pavement be properly protected against the effects of rain before the pavement is sufficiently hardened, the Contractor will be required to have available at all times materials for the protection of the edges and surfaces of the unhardened RMP. The protective materials and method of application shall be the same as previously described in paragraph WEATHER LIMITATIONS. When rain appears imminent, all paving operations shall stop, and all available personnel shall begin covering the surface of the hardened RMP with protective covering.

3.15 ACCEPTABILITY OF WORK

3.15.1 General

Routine testing for acceptability of work shall be performed by the Contractor and approved by the Contracting Officer. Additional tests required to determine acceptability of non-conforming material shall be performed by the Contractor at the expense of the Contractor. When a section of pavement fails to meet the specification requirements, that section shall be totally removed and replaced at the Contractor's expense. The Contracting Officer reserves the right to sample and test any area which appears to deviate from the specification requirements.

3.15.2 Field Sampling of RMP Materials

3.15.2.1 Open Graded Bituminous Mixture

Samples of open graded bituminous mixture shall be taken from loaded trucks for every 1,000 square yards of pavement, but not less than two samples for each day of paving for determining asphalt content, aggregate gradation, and laboratory compacted voids total mix. Laboratory specimens of open graded bituminous material shall be compacted in 4 inch diameter molds to a 2 inch thickness using 25 blows on one side from a Marshall hand hammer. Test results from the sampled open graded bituminous mixture shall be compared to the approved job-mix-formula and approved by the Contracting Officer for acceptance.

3.15.2.2 Slurry Grout

Each batch of slurry grout shall be tested for viscosity at the jobsite after thorough mixing and before application. Any batch of slurry grout failing to meet the viscosity specified requirements shall be rejected and removed from the jobsite. Slurry grout with visible amounts of sand settling out of suspension during application shall be rejected and removed from the jobsite.

3.15.2.3 Core Samples

Random core samples shall be taken from the in-place open graded bituminous mixture before and after application of the slurry grout. The Contractor shall take at least 2 field core samples before grout application and 2 after grout application for every 1,000 square yards of finished RMP. Field core samples shall be 4 or 6 inch diameter and extend the full depth of the RMP surface layer. The ungrouted core samples shall be tested for thickness. The grouted core samples shall be visually inspected for acceptable grout penetration. Acceptable grout penetration shall be through the full thickness of the RMP layer with a minimum of 90 percent of the visible void spaces filled with slurry grout. After testing, the Contractor shall turn over all cores to the Contracting Officer. Core holes in ungrouted RMP shall be filled with hot open graded bituminous material and leveled to match the surrounding pavement surface. Core holes in grouted RMP shall be filled within 24 hours from the time of coring with RMP material, portland cement concrete material, or other approved portland cement concrete patching material.

3.15.3 Thickness and Surface-Smoothness Requirements

Finish surface of RMP, when tested as specified below, shall conform to the thickness specified and to surface smoothness requirements specified in Table VI.

TABLE VI.

SURFACE-SMOOTHNESS TOLERANCES

Direction of Testing	Resin Modified Pavement Tolerance, inch
Longitudinal	3/8
Transverse	3/8

3.15.3.1 Thickness

The thickness of the RMP shall meet the requirements shown on the contract drawings. The measured thickness of the RMP shall not exceed the design thickness by more than 1/2 inch, or be deficient in thickness by more than 1/8 inch.

3.15.3.2 Surface Smoothness

Finished surfaces shall not deviate from testing edge of a 12-foot straightedge more than the tolerances shown for the respective pavement category in Table VI.

-- End of Section --

SECTION TABLE OF CONTENTS

DIVISION 02 - SITE WORK

SECTION 02748

BITUMINOUS TACK AND PRIME COATS

PART 1 GENERAL

1.1 REFERENCES
1.2 UNIT PRICES
1.2.1 Measurement
1.2.2 Payment
1.2.3 Waybills and Delivery Tickets
1.3 SUBMITTALS
1.4 PLANT, EQUIPMENT, MACHINES AND TOOLS
1.4.1 General Requirements
1.4.2 Bituminous Distributor
1.4.3 Power Brooms and Power Blowers
1.5 WEATHER LIMITATIONS

PART 2 PRODUCTS

2.1 TACK COAT
2.2 PRIME COAT

PART 3 EXECUTION

3.1 PREPARATION OF EMULSION
3.2 PREPARATION OF SURFACE
3.3 APPLICATION RATE
3.3.1 Tack Coat
3.3.2 Prime Coat
3.4 APPLICATION TEMPERATURE
3.4.1 Viscosity Relationship
3.4.2 Temperature Ranges
3.5 APPLICATION
3.6 CURING PERIOD
3.7 FIELD QUALITY CONTROL

-- End of Section Table of Contents --

SECTION 02748

BITUMINOUS TACK AND PRIME COATS

PART 1 GENERAL

1.1 REFERENCES

The publications listed below form a part of this specification to the extent referenced. The publications are referred to in the text by basic designation only.

AMERICAN SOCIETY OF TESTING AND MATERIALS (ASTM)

ASTM D 140	(1993) Sampling Bituminous Materials
ASTM D 977	(1991) Emulsified Asphalt
ASTM D 1250	(1980; R 1990) Petroleum Measurement Tables
ASTM D 2397	(1994) Cationic Emulsified Asphalt
ASTM D 2995	(1993) Determining Application Rate of Bituminous Distributors

1.2 UNIT PRICES

1.2.1 Measurement

The bituminous material paid for will be the measured coated area of the accepted work, provided that the measured quantities in conjunction with the area are not 10 percent over the specified application rate. Any amount of bituminous material more than 10 percent over the specified application rate for each application shall be deducted from the measured quantities, except for irregular areas where hand spraying of the bituminous material is necessary. Measured quantities shall be expressed in the square yards of the completed and accepted area.

1.2.2 Payment

The coated area, determined as specified above, will be paid for at the respective contract unit price for the base year Line Items: 0001AC and 0003AE, "PRIME COAT"; and 0001AN and 0003AE, "TACK COAT" of the Pricing Schedule. Prime coat and tack coat shall be considered as part of the incidental items for the base year Line Item 0002, "PATCHING EXISTING ASPHALT"; no additional compensation shall be forthcoming for patching prime or tack coating. Payment shall constitute full compensation for all operations necessary to complete the work as specified herein.

1.2.3 Waybills and Delivery Tickets

Before the final statement is allowed, the Contractor shall file with the Contracting Officer certified waybills and certified delivery tickets for all bituminous materials used in the construction of the pavement covered

by the contract. The Contractor shall not remove bituminous material from storage until the initial outage and temperature measurements have been taken. The delivery or storage units will not be released until the final outage has been taken.

1.3 SUBMITTALS

Government approval is required for submittals with a "GA" designation; submittals having an "FIO" designation are for information only. The following shall be submitted in accordance with Section 01330 SUBMITTAL PROCEDURES:

SD-09 Reports

Tests; GA.

Copies of all test results for bituminous materials, within 24 hours of completion of tests. Certified copies of the manufacturer's test reports indicating compliance with applicable specified requirements, not less than 30 days before the material is required in the work.

SD-18 Records

Waybills and Delivery Tickets; FIO.

Waybills and delivery tickets, during progress of the work.

1.4 PLANT, EQUIPMENT, MACHINES AND TOOLS

1.4.1 General Requirements

Plant, equipment, machines and tools used in the work shall be subject to approval and shall be maintained in a satisfactory working condition at all times.

1.4.2 Bituminous Distributor

The distributor shall have pneumatic tires of such size and number to prevent rutting, shoving or otherwise damaging the base surface or other layers in the pavement structure. The distributor shall be designed and equipped to spray the bituminous material in a uniform coverage at the specified temperature, at readily determined and controlled rates with an allowable variation from the specified rate of not more than plus or minus 5 percent, and at variable widths. Distributor equipment shall include a separate power unit for the bitumen pump, full-circulation spray bars, tachometer, pressure gauges, volume-measuring devices, adequate heaters for heating of materials to the proper application temperature, a thermometer for reading the temperature of tank contents, and a hand hose attachment suitable for applying bituminous material manually to areas inaccessible to the distributor. The distributor shall be equipped to circulate and agitate the bituminous material during the heating process.

1.4.3 Power Brooms and Power Blowers

Power brooms and power blowers shall be suitable for cleaning the surfaces to which the bituminous coat is to be applied.

1.5 WEATHER LIMITATIONS

Bituminous coat shall be applied only when the surface to receive the bituminous coat is dry. Bituminous coat shall be applied only when the atmospheric temperature in the shade is 50 degrees F or above and when the temperature has not been below 35 degrees F for the 12 hours prior to application.

PART 2 PRODUCTS

2.1 TACK COAT

Emulsified asphalt shall conform to ASTM D 977 Grade SS-1. Cationic emulsified asphalt shall conform to ASTM D 2397 Grade CSS-1.

2.2 PRIME COAT

Emulsified asphalt shall conform to ASTM D 977 Grade SS-1. Cationic emulsified asphalt shall conform to ASTM D 2397 Grade CSS-1.

PART 3 EXECUTION

3.1 PREPARATION OF EMULSION

Bituminous materials for emulsions shall be diluted by adding equal volumes of bituminous material and compatible water. If the bituminous material is to be diluted in the field, first test the mix by placing equal volumes of emulsion and water in a glass quart jar (do not use a metal container, as it could cause the mixture to "break") and mix for one minute. If the mixture "breaks", a different source of water or bituminous material is required.

3.2 PREPARATION OF SURFACE

Immediately before applying the bituminous coat, all loose material, dirt, clay, or other objectionable material shall be removed from the surface to be treated. Power brooms shall be used as needed. The surface shall be dry and clean at the time of treatment.

3.3 APPLICATION RATE

The exact quantities within the range specified, which may be varied to suit field conditions, will be determined by the Contracting Officer.

3.3.1 Tack Coat

Bituminous material for the tack coat shall be applied in quantities of not less than 0.05 gallon nor more than 0.15 gallon per square yard of pavement surface.

3.3.2 Prime Coat

Bituminous material for the prime coat shall be applied in quantities of not less than 0.15 gallon nor more than 0.40 gallon per square yard of pavement surface.

3.4 APPLICATION TEMPERATURE

3.4.1 Viscosity Relationship

Asphalt application temperature shall provide an application viscosity between 10 and 60 seconds, Saybolt Furol, or between 20 and 120 centistokes, kinematic. The temperature viscosity relation shall be furnished to the Contracting Officer.

3.4.2 Temperature Ranges

The viscosity requirements shall determine the application temperature to be used. The following is a normal range of application temperatures:

Emulsions	
SS-1	70-160 degrees F
CSS-1	70-160 degrees F

3.5 APPLICATION

Following preparation and subsequent inspection of the surface, the bituminous coat shall be applied at the specified rate with uniform distribution over the surface to be treated. All areas and spots missed by the distributor shall be properly treated with the hand spray. Until the succeeding layer of pavement is placed, the surface shall be maintained by protecting the surface against damage and by repairing deficient areas at no additional cost to the Government. If required, clean dry sand shall be spread to effectively blot up any excess bituminous material. To obtain uniform application of the prime coat on the surface treated at the junction of previous and subsequent applications, building paper shall be spread on the surface for a sufficient distance back from the ends of each application to start and stop the prime coat on the paper. Immediately after application, the building paper shall be removed and disposed-of.

3.6 CURING PERIOD

Following application of the bituminous material and prior to application of the succeeding layer of pavement, the bituminous coat shall be allowed to cure and to obtain evaporation of any volatiles or moisture. Prime coat shall be allowed to cure without being disturbed for a period of at least 48 hours or longer, as may be necessary to attain penetration into the treated course.

3.7 FIELD QUALITY CONTROL

Samples of the bituminous material used shall be obtained by the Contractor as directed, under the supervision of the Contracting Officer. The sample may be retained and tested by the Government at no cost to the Contractor.

-- End of Section --

SECTION TABLE OF CONTENTS

DIVISION 02 - SITE WORK

SECTION 02749A

HOT-MIX ASPHALT (HMA) FOR AIRFIELDS

PART 1 GENERAL

1.1 REFERENCES
1.2 MEASUREMENT
1.2.1 Hot-Mix Asphalt
1.3 PAYMENT
1.4 GRADE CONTROL
1.5 SUBMITTALS
1.6 DELIVERY, STORAGE, AND HANDLING OF MATERIALS
1.6.1 Storage of Bituminous Paving Mixture
1.6.2 Transportation of Bituminous Mixture
1.6.3 Waybills and Delivery Tickets
1.6.4 Mineral Aggregates
1.6.5 Bituminous Materials
1.7 PLANT, EQUIPMENT, MACHINES, AND TOOLS
1.7.1 General
1.7.2 Mixing Plants
1.7.2.1 General
1.7.2.2 Drum Mixer
1.7.3 Straightedge
1.8 ACCESS TO PLANT AND EQUIPMENT
1.9 SAMPLING AND TESTING
1.9.1 Aggregates
1.9.2 Bituminous Materials
1.9.3 Bituminous Mixtures

PART 2 PRODUCTS

2.1 AGGREGATES
2.1.1 Coarse Aggregate
2.1.2 Fine Aggregates
2.1.3 Mineral Filler
2.2 BITUMINOUS MATERIALS
2.2.1 PG Grades
2.3 ADDITIVES
2.4 BITUMINOUS HOT MIX
2.5 PROPORTIONING OF MIXTURE
2.5.1 Job Mix Formula
2.5.2 Test Properties of Bituminous Mixtures
2.5.3 Stability, Flow and Voids
2.5.3.1 Nonabsorptive Aggregate
2.5.3.2 Antistripping Agent

PART 3 EXECUTION

3.1 WEATHER LIMITATIONS

3.2 EXISTING PAVEMENT CONDITIONING
3.3 BASE COURSE CONDITIONING
3.4 SURFACE PREPARATION OF UNDERLYING COURSE
3.5 PREPARATION OF BITUMINOUS MIXTURES
3.6 WATER CONTENT OF AGGREGATES
3.7 PRIME COATING
3.8 TACK COATING
3.9 PLACING
3.9.1 Joints in Succeeding Course
3.9.2 General Requirements for Use of Mechanical Spreader
3.9.3 Placing Strips Succeeding Initial Strips
3.9.4 Handspreading in Lieu of Machine Spreading
3.10 JOINTS
3.10.1 General
3.10.2 Transverse Joint
3.10.3 Longitudinal Joints
3.11 COMPACTION OF MIXTURE
3.11.1 Test Section
3.11.2 Correcting Deficient Areas
3.12 PROTECTION OF PAVEMENT
3.13 TESTS
3.14 ACCEPTABILITY OF WORK
3.14.1 General
3.14.2 Grade and Surface-Smoothness Requirements
3.14.2.1 Plan Grade Requirement
3.14.2.2 Surface Smoothness Requirement
3.15 PERCENT PAYMENT
3.15.1 Acceptance of Lots
3.15.2 Additional Sampling and Testing
3.15.3 Aggregate Gradation
3.15.4 Asphalt Content
3.15.5 Density Considerations
3.15.5.1 Field Density
3.15.5.2 Density Samples
3.15.6 Grade
3.15.7 Surface Smoothness
3.16 CONSTRUCTION QUALITY CONTROL

-- End of Section Table of Contents --

SECTION 02749A

HOT-MIX ASPHALT (HMA) FOR AIRFIELDS

PART 1 GENERAL

1.1 REFERENCES

The publications listed below form a part of this specification to the extent referenced. The publications are referred to in the text by basic designation only.

AMERICAN SOCIETY FOR TESTING AND MATERIALS (ASTM)

ASTM C 88	(1990) Soundness of Aggregates by Use of Sodium Sulfate or Magnesium Sulfate
ASTM C 117	(1995) Materials Finer than 75 micrometer (No. 200) Sieve in Mineral Aggregates by Washing
ASTM C 127	(1988; R 1993) Specific Gravity and Absorption of Coarse Aggregate
ASTM C 128	(1993) Specific Gravity and Absorption of Fine Aggregate
ASTM C 131	(1996) Resistance to Degradation of Small-Size Coarse Aggregate by Abrasion and Impact in the Los Angeles Machine
ASTM C 136	(1996a) Sieve Analysis of Fine and Coarse Aggregates
ASTM C 183	(1995a) Sampling and the Amount of Testing of Hydraulic Cement
ASTM D 5	(1995) Penetration of Bituminous Materials
ASTM D 75	(1987; R 1992) Sampling Aggregates
ASTM D 140	(1993) Sampling Bituminous Materials
ASTM D 242	(1995) Mineral Filler for Bituminous Paving Mixtures
ASTM D 1559	(1989) Resistance to Plastic Flow of Bituminous Mixtures Using Marshall Apparatus
ASTM D 1856	(1995a) Recovery of Asphalt from Solution by Abson Method
ASTM D 2041	(1995) Theoretical Maximum Specific

	Gravity and Density of Bituminous Paving Mixtures
ASTM D 2172	(1995) Quantitative Extraction of Bitumen from Bituminous Paving Mixtures
ASTM D 2216	(1992) Laboratory Determination of Water (Moisture) Content of Soil and Rock
ASTM D 2726	(1993) Bulk Specific Gravity and Density of Compacted Bituminous Mixtures Using Saturated Surface-Dry Specimens
ASTM D 3381	(1992) Viscosity-Graded Asphalt Cement for Use in Pavement Construction
ASTM D 3515	(1996) Hot-Mixed, Hot-Laid Bituminous Paving Mixtures
ASTM D 4791	(1995) Flat Particles, Elongated Particles, or Flat and Elongated Particles in Coarse Aggregate

CORPS OF ENGINEERS (COE)

COE CRD-C 650	(1995) Standard Method for Density and Percent Voids of Compacted Bituminous Paving Mixtures

1.2 MEASUREMENT

1.2.1 Hot-Mix Asphalt

The amount paid for will be the number of square yards of 3-inch thick, and each additional inch of bituminous mixture used in the accepted work.

1.3 PAYMENT

Quantities of hot-mix asphalt, determined as specified above, will be paid for at contract unit prices for the particular option year Line Items _002A, "Pavement 3"" and _002B "Each Additional Inch" of the Pricing Schedule, or at reduced prices adjusted in accordance with paragraph ACCEPTABILITY OF WORK. Payment shall constitute full compensation for preparing or reconditioning the base course or existing pavement; for furnishing all materials, equipment, plant, and tools; and for all labor and other incidentals necessary to complete work required by this section of the specifications.

1.4 GRADE CONTROL

Lines and grades shown on contract drawings for each pavement category of contract shall be established and maintained by means of line and grade stakes placed at site of work by the Contractor in accordance with the SPECIAL CONTRACT REQUIREMENTS. Elevations of bench marks used by the Contractor for controlling pavement operations at the site of work will be determined, established, and maintained by the Government. Finished pavement elevations shown shall be established and controlled at the site of work by the Contractor in accordance with bench mark elevations furnished by the Contracting Officer.

1.5 SUBMITTALS

Government approval is required for submittals with a "GA" designation; submittals having an "FIO" designation are for information only. The following shall be submitted in accordance with Section 01330 SUBMITTAL PROCEDURES:

SD-14 Samples

Mix Design Samples (Contractor and Job); GA.

Samples of materials for mix design. Sufficient quantities of each aggregate and mineral filler (if needed) shall be furnished to provide a minimum of 200 pounds of blended aggregate in the same approximate proportions as will be used in the project. Blending of the aggregates will be accomplished by the Government. A minimum of five gallons of the asphalt cement to be used in the project shall be included. Anti-stripping agent shall be furnished if needed to meet retained stability criteria. Results of gradation tests performed on the aggregate samples submitted shall be furnished with the samples showing that the samples can be combined to meet the gradation requirements of Table I.

Samples for Government Testing; GA.

Samples of aggregates, including mineral filler, for approval of aggregate sources and stockpiles prior to the start of production and at times during production of the bituminous mixtures. Times and points of sampling will be designated by the Contracting Officer. Samples will be the basis of approval of specific sources or stockpiles of aggregates for aggregate requirements. Unless otherwise directed, ASTM D 75 shall be used in sampling coarse aggregate and fine aggregate, and ASTM C 183 shall be used in sampling mineral filler. All tests necessary to determine compliance with requirements specified herein will be made by the Government.

1.6 DELIVERY, STORAGE, AND HANDLING OF MATERIALS

1.6.1 Storage of Bituminous Paving Mixture

Storage of bituminous paving mixture shall conform to the applicable requirements of ASTM D 3515; however, in no case shall the mixture be stored for more than 4 hours.

1.6.2 Transportation of Bituminous Mixture

Transportation from the paving plant to the site shall be in trucks having tight, clean, smooth beds lightly coated with an approved releasing agent to prevent adhesion of mixture to truck bodies. Excessive releasing agent shall be drained prior to loading. Each load shall be covered with canvas or other approved material of ample size to protect mixture from weather and to prevent loss of heat. Loads that have crusts of cold, unworkable material or have become wet by rain will be rejected. Hauling over freshly placed material will not be permitted.

1.6.3 Waybills and Delivery Tickets

Waybills and delivery tickets shall be submitted to the Contracting Officer during progress of the work. Before the final statement is allowed, the Contractor shall file with the Contracting Officer certified waybills and

certified delivery tickets for all aggregates and bituminous materials actually used in the construction and covered by the contract.

1.6.4 Mineral Aggregates

Mineral aggregates shall be delivered to the site of the bituminous mixing plant and stockpiled in such manner as to preclude fracturing of aggregate particles, segregation, contamination, or intermingling of different materials in the stockpiles or cold-feed hoppers. Mineral filler shall be delivered, stored, and introduced into the mixing plant in a manner to preclude exposure to moisture or other detrimental conditions.

1.6.5 Bituminous Materials

Bituminous materials shall be maintained at appropriate temperature during storage but shall not be heated by application of direct flame to walls of storage tanks or transfer lines. Storage tanks, transfer lines, and weigh bucket shall be thoroughly cleaned before a different type or grade of bitumen is introduced into the system. The asphalt cement shall be heated sufficiently to allow satisfactory pumping of the material; however, the storage temperature shall be maintained below 300 degrees F.

1.7 PLANT, EQUIPMENT, MACHINES, AND TOOLS

1.7.1 General

The bituminous plant shall be of such capacity, as specified herein to produce the quantities of bituminous mixtures required for the project. Hauling equipment, paving machines, rollers, miscellaneous equipment, and tools shall be provided in sufficient numbers and capacity and in proper working condition to place the bituminous paving mixtures at a rate equal to the plant output.

1.7.2 Mixing Plants

1.7.2.1 General

The mixing plant shall be an automatic or semiautomatic controlled, commercially manufactured unit designed and operated to consistently produce a mixture within the tolerances specified for the job-mix formula (JMF). The plant shall have a minimum capacity of 100 tons per hour.

1.7.2.2 Drum Mixer

Drum mixers shall be prequalified at the production rate to be used during actual mix production. The prequalification tests will include extraction and recovery of the asphalt cement in accordance with ASTM D 2172 and ASTM D 1856. The penetration of the recovered asphalt binder shall not be less than 60 percent of the original penetration, as measured in accordance with ASTM D 5.

1.7.3 Straightedge

The Contractor shall furnish and maintain at the site, in good condition, one 12 foot straightedge for each bituminous paver. Straightedge shall be made available for Government use. Straightedge shall be constructed of aluminum or other lightweight metal and shall have blades of box or box-girder cross section with flat bottom reinforced to ensure rigidity and accuracy. Straightedge shall have handles to facilitate movement on

pavement.

1.8 ACCESS TO PLANT AND EQUIPMENT

The Contracting Officer shall have access at all times to all parts of the paving plant for checking adequacy of equipment in use; inspecting operation of plant; verifying weights, proportions, and character of materials; and checking temperatures maintained in preparation of mixtures.

1.9 SAMPLING AND TESTING

1.9.1 Aggregates

Sources of aggregates shall be selected well in advance of the time the materials are required in the work. If a previously developed source is selected, samples shall be submitted 30 days before starting production, with evidence that central-plant, hot-mix bituminous pavements constructed with the aggregates have had a satisfactory service record of at least five years under similar climatic and traffic conditions. When new sources are developed, the Contractor shall indicate sources and submit samples and his plan for operation 30 days before starting production. The Contracting Officer will make such tests and other investigations as necessary to determine whether aggregates meeting the requirements specified herein can be produced from proposed sources. If a sample of material from a new source fails to meet specification requirements, the material represented by the sample shall be replaced, and the cost of testing the replaced sample will be at the expense of the Contractor. Approval of source of aggregate does not relieve the Contractor of the responsibility for delivery at the jobsite of aggregates that meet the requirements specified.

1.9.2 Bituminous Materials

Samples of bituminous materials shall be obtained by the Contractor; sampling shall be in accordance with ASTM D 140. Tests necessary to determine conformance with requirements specified herein will be performed by the Contracting Officer without cost to the Contractor. Sources where bituminous materials are obtained shall be selected in advance of time when materials will be required in the work, and samples of the asphalt cement specified shall be submitted for approval not less than 30 days before production of the asphalt mixture. In addition to initial qualification testing of bituminous materials, samples shall be taken before and during construction when shipments of bituminous materials are received or when necessary to assure that handling or storage has not been detrimental to the bituminous material. The samples shall be taken by the Contractor and tested by the Contracting Officer.

1.9.3 Bituminous Mixtures

Sampling and testing of bituminous mixtures will be accomplished by the Contracting Officer except as specified in paragraph CONTRACTOR QUALITY CONTROL.

PART 2 PRODUCTS

2.1 AGGREGATES

Aggregates shall consist of natural sand, crushed stone, crushed gravel, crushed slag, screenings, sand, and mineral filler, as required. The

portion of materials retained on the No. 4 sieve shall be known as coarse aggregate; the portion passing the No. 4 sieve and retained on the No. 200 sieve as fine aggregate; and the portion passing the No. 200 sieve as mineral filler. Aggregate gradation shall conform to gradation(s) specified in TABLE I. TABLE I is based on aggregates of uniform specific gravity; the percentage passing various sieves may be changed by the Contracting Officer when aggregates of varying specific gravities are used. Adjustments of percentages passing various sieves may be directed by the Contracting Officer when aggregates vary more than 0.2 in specific gravity.

TABLE I AGGREGATE GRADATION

1/2 in. Maximum

Sieve Size	Wearing course (Percent by Weight Passing)
1 inch	-
3/4 inch	-
1/2 inch	100
3/8 inch	79-93
NO. 4	59-73
NO. 8	46-60
NO. 16	34-48
NO. 30	24-38
NO. 50	15-27
NO. 100	8-18
NO. 200	3-6

1/2 in Maximum

Sieve Size	Intermediate Course (Percent by Weight Passing)
1 inch	-
3/4 inch	-
1/2 inch	100
3/8 inch	74-92
NO. 4	53-71
NO. 8	38-56
NO. 16	27-45
NO. 30	19-37
NO. 50	13-27
NO. 100	9-19
NO. 200	3-7

2.1.1 Coarse Aggregate

Coarse aggregate shall consist of clean, sound, durable particles meeting the following requirements:

a. Percentage of loss shall not exceed 40 percent after 500 revolutions, as determined in accordance with ASTM C 131.

b. Percentage of loss shall not exceed 12 after five cycles performed in accordance with ASTM C 88, using magnesium sulfate.

c. Crushed gravel retained on the No. 4 sieve and each coarser sieve listed in TABLE I shall contain at least 75 percent by weight of crushed pieces having two or more fractured faces with the area of each face equal to at least 75 percent of the smallest midsectional area of piece. When

two fractures are contiguous, the angle between planes of fractures shall be at least 30 degrees to count as two fractured faces.

d. Particle shape of crushed aggregates shall be essentially cubical. Quantity of flat and elongated particles in any sieve size shall not exceed 20 percent by weight, when determined in accordance with ASTM D 4791.

2.1.2 Fine Aggregates

Fine aggregate shall consist of clean, sound, durable, angular particles produced by crushing stone, slag, or gravel that meets requirements for wear and soundness specified for coarse aggregate. Fine aggregates produced by crushing gravel shall have at least 90 percent by weight of crushed particles having two or more fractured faces in the portion retained on the No. 30 sieve. This requirement shall apply to material before blending with natural sand, when blending is necessary. Quantity of natural sand to be added to the wearing-and intermediate-course mixtures shall not exceed 15 percent by weight of coarse and fine aggregate and material passing the No. 200 sieve. Natural sand shall be clean and free from clay and organic matter. Percentage of loss shall not exceed 12 after five cycles of the soundness test performed in accordance with ASTM C 88, using magnesium sulfate.

2.1.3 Mineral Filler

Mineral filler shall conform to ASTM D 242.

2.2 BITUMINOUS MATERIALS

Bituminous material to be mixed with the mineral aggregates shall be paving asphalt conforming to ASTM D 3381, Viscosity-Graded Asphalt Cement for Use in Pavement Construction as listed in Table of the ASTM D 3381, Requirements for Asphalt Cement Viscosity-Graded at 140 degrees F. Paving asphalt viscosity grade shall be **AR-4000**. Certified results of tests conducted in accordance with ASTM D 5 shall be submitted in advance of any paving, showing the penetration at 77 degrees F for the AR grades of asphalt that will actually be used in the paving mix of this project. In addition, the penetration range at 77 degrees F shall be 25.

2.2.1 PG Grades

Alternatively, if the Superpave mix design system is implemented, the correct performance graded(PG) binder shall be used.

2.3 ADDITIVES

The use of additives such as antistripping and antifoaming agents is subject to approval.

2.4 BITUMINOUS HOT MIX

Bituminous hot mix shall consist of coarse aggregate, fine aggregate, mineral filler, bituminous material, and approved additives, if required, of the qualities and in the proportions specified and shall conform to requirements contained in paragraphs PROPORTIONING OF MIXTURE and ACCEPTABILITY OF WORK.

2.5 PROPORTIONING OF MIXTURE

2.5.1 Job Mix Formula

The JMF for the bituminous mixture will be furnished to the Contracting Officer by the Contractor. The job-mix formula shall be performed in accordance to ASTM D 1559 and ASTM D 2726. No payment will be made for mixtures produced prior to receipt of the JMF by the Contractor. The formula will indicate the percentage of each stockpile and mineral filler, (as based on samples furnished) the percentage passing each sieve size, the percentage of bitumen, and the amount of antistripping agent, if needed. The gradation of the JMF that is submitted shall be within the limits specified in Table I. Tolerances are given in TABLE II for asphalt content, temperature, and aggregate grading for tests conducted on the mix as discharged from the mixing plant during production. However, the final evaluation of aggregate gradation and asphalt content will be based on paragraphs "3.14 ACCEPTABILITY OF WORK" and "3.15 PERCENT PAYMENT". No changes in the JMF shall be permitted unless approved by the Contracting Officer.

TABLE II JOB-MIX TOLERANCES

Material	Tolerance, Plus or Minus
Aggregate passing No. 4 or larger sieves	4 percent
Aggregate passing Nos. 8, 16, 30, and 50 sieves	3 percent
Aggregate passing Nos. 100 and 200 sieves	1 percent
Bitumen	0.20 percent
Temperature of mixing	25 degrees F

2.5.2 Test Properties of Bituminous Mixtures

Finished mixture shall meet requirements described below when tested in accordance with ASTM D 1559. All samples will be compacted with 75 blows of specified hand-held hammer on each side of sample (or mechanical equipment providing compaction equivalent to a hand-held hammer). When bituminous mixture fails to meet the requirements specified below, the paving operation shall be stopped until the cause of noncompliance is determined and corrected.

2.5.3 Stability, Flow and Voids

Requirements for stability, flow, and voids are shown in TABLES III and IV for nonabsorptive and absorptive aggregates, respectively.

TABLE III NONABSORPTIVE-AGGREGATE MIXTURE (1)

	Wearing Course	Intermediate Course
Stability minimum, pounds	1800	1800
Flow maximum, 1-100-inch units	16	16
Voids total mix, percent (1)	3-5	5-7
Voids filled with bitumen, percent	70-80	50-70

(1) The Contracting Officer may permit deviations from limits specified for voids filled with bitumen in the intermediate course in order to stay within limits for percent voids total mix.

2.5.3.1 Nonabsorptive Aggregate

When the water-absorption value of the entire blend of aggregate does not exceed 2.5 percent, as determined in accordance with ASTM C 127 and ASTM C 128, the aggregate is designated as nonabsorptive. The theoretical specific gravity computed from the apparent specific gravity or ASTM D 2041 will be used in computing voids total mix and voids filled with bitumen, and the mixture shall meet the requirements in TABLE III.

2.5.3.2 Antistripping Agent

Retained stability (stripping) of the aggregate shall be determined by comparing the Marshall Stability determined by ASTM D 1559 with the normal 30 to 40 minute water bath immersion to the retained stability of the Job Mix Formula test specimen determined after a 24- hour water bath immersion controlled at a temperature of 140 degrees F. The retained stability shall be at least 75% of the original Marshall stability. When the index of retained stability is 75 percent or less, aggregate stripping tendencies shall be countered by the use of hydrated lime or by treating the bitumen with an approved antistripping agent. The hydrated lime will be considered as mineral filler and will be considered in the gradation requirements. The amount of hydrated lime or antistripping agent added to bitumen will be determined during development of the Job Mix Formula, and will be sufficient, to produce an index of retained stability greater than 75 percent. Use of additional antistripping agent may be directed during progress of the work, if necessary. No additional payment will be made to the Contractor for addition of antistripping agent required.

PART 3 EXECUTION

3.1 WEATHER LIMITATIONS

Bituminous courses shall not be constructed when the temperature of the surface of the existing pavement or base course is below 40 degrees F.

3.2 EXISTING PAVEMENT CONDITIONING

3.3 BASE COURSE CONDITIONING

Surface of the base course will be inspected for adequate compaction and

surface tolerances specified in Section 02722 AGGREAGATE BASE COURSE. Unsatisfactory areas shall be corrected.

3.4 SURFACE PREPARATION OF UNDERLYING COURSE

Prior to the placing of intermediate or wearing course, the underlying course shall be cleaned of all dust and other foreign or objectionable matter with power brooms and hand brooms.

3.5 PREPARATION OF BITUMINOUS MIXTURES

Rates of feed of aggregates shall be regulated so that moisture content and temperature of aggregates will be within specified tolerances. Aggregates, mineral filler, and bitumen shall be conveyed into the mixer in proportionate quantities required to meet the JMF. Mixing time shall be as required to obtain a uniform coating of the aggregate with the bituminous material. Temperature of bitumen at the time of mixing shall not exceed 300 degrees F. Temperature of aggregate and mineral filler in the mixer shall not exceed 325 degrees F when bitumen is added. Overheated and carbonized mixtures or mixtures that foam shall not be used.

3.6 WATER CONTENT OF AGGREGATES

Drying operations shall reduce the water content of mixture to less than 0.75 percent. Water content test will be conducted in accordance with ASTM D 2216; weight of sample will be at least 500 grams. If water content is determined on hot bin samples, the water content will be a weighted average based on the composition of the blend.

3.7 PRIME COATING

Surface of previously constructed base course shall be sprayed with a coat of bituminous material conforming to Section 02748 BITUMINOUS TACK AND PRIME COATS.

3.8 TACK COATING

Contact surfaces of previously constructed pavement, curbs, manholes, and other structures to be contacted by the bituminous mat shall be sprayed with a thin coat of bituminous material conforming to Section 02748 BITUMINOUS TACK AND PRIME COATS.

3.9 PLACING

Bituminous courses shall be constructed only when the base course or existing pavement has no free water on the surface. Bituminous mixtures shall not be placed without ample time to complete spreading and rolling during daylight hours, unless approved satisfactory artificial lighting is provided. Where an underlying bituminous course is left uncovered by the succeeding course for 48 hours or more, or where directed a thin tack coat shall be applied before placing the succeeding course.

3.9.1 Joints in Succeeding Course

Longitudinal joints that occur at runway and taxiway centerlines shall be constructed so that the joint in each course is located 12 inches from the centerline with the joint in each succeeding course alternating from one side of the centerline to the other. Other longitudinal joints shall be constructed so that the joint in each succeeding course is offset at least

12 inches from the previous one. Transverse joints in each course shall be constructed so that they are offset by at least 2 feet from a joint in any lower course. All joints in every course shall have neat, dense vertical faces; wedge type joints will not be permitted, except for transverse joints at the end of a leveling course, where approved. Where this is not attained otherwise, sawing will be required. Where drawings do not exactly define thickness or extent of a leveling or intermediate course, the Contractor shall assure that the depth and extent is controlled so that no overlaying course will be placed at less than the thickness indicated, and in no case less than 1-1/2 inches.

3.9.2 General Requirements for Use of Mechanical Spreader

The temperature of the bituminous mixture when dumped into the hopper of the paver (mechanical spreader) shall be between 250 and 270 degrees F. If less than 250 degrees F, the mixture shall be wasted. The mechanical spreader shall be adjusted and the speed regulated so that the surface of the course being laid will be smooth and continuous without tears and pulls, and of such depth that, when compacted, the surface will conform to the cross section indicated. Placing centerline areas with crowned sections or high side of areas with one-way slope shall be as directed. Each lot of material placed shall conform to requirements specified in paragraph ACCEPTABILITY OF WORK. Placing of the mixture shall be as nearly continuous as possible, and the speed of placing shall be adjusted, as directed, to permit proper rolling. When segregation occurs in the mixture during placing, the spreading operation shall be suspended until the cause is determined and corrected.

3.9.3 Placing Strips Succeeding Initial Strips

In placing each succeeding strip after the initial strip has been spread and compacted as specified below, the screed of the mechanical spreader shall overlap the previously placed strip 2 to 3 inches and be sufficiently high so that subsequent compaction produces a smooth dense joint. Mixture placed on the edge of a previously placed strip by the mechanical spreader shall be pushed back to the edge of the strip by the use of a lute. Excess material shall be removed and wasted.

3.9.4 Handspreading in Lieu of Machine Spreading

In isolated areas where use of machine spreading is impractical, the mixture shall be spread by hand. Spreading shall be in a manner to prevent segregation. The mixture shall be spread uniformly with hot rakes in a loose layer of thickness that, when compacted, will conform to the required grade, density, and thickness.

3.10 JOINTS

3.10.1 General

Joints between old and new pavements, between successive days' work, or joints that have become cold (less than 175 degrees F) because of any delay, shall be made to ensure continuous bond between the old and new sections of the course. All joints shall have the same texture and smoothness as other sections of the course. Contact surfaces of previously constructed pavements coated by dust, sand, or other objectionable material shall be cleaned by brushing or shall be cut back as directed. When directed by the Contracting Officer, the surface against which new material is placed shall be sprayed with a thin, uniform coat of bituminous material

conforming to Section 02748 BITUMINOUS TACK AND PRIME COATS. Material shall be applied far enough in advance of the placement of fresh mixture to ensure adequate curing. Care shall be taken to prevent damage or contamination of the sprayed surface.

3.10.2 Transverse Joint

The roller shall pass over the unprotected end of a strip of freshly placed material only when the placing is discontinued or the delivery of the mixture is interrupted to the extent that material in place may become cold. In all cases, prior to continuing placement, the edge of previously placed pavement shall be cut back by sawing full depth to expose an even vertical surface for full thickness of the course. In continuing placement of the strip, the mechanical spreader shall be positioned on the transverse joint so that sufficient hot mixture will be spread to obtain a joint after rolling that conforms to the required density and smoothness specified herein.

3.10.3 Longitudinal Joints

Edges of a previously placed strip shall be prepared such that the pavement in and immediately adjacent to the joint between this strip and the succeeding strip meets the requirements for grade, smoothness, and density as described in paragraph ACCEPTABILITY OF WORK.

3.11 COMPACTION OF MIXTURE

Rolling shall begin as soon after placing as the mixture will bear a roller without undue displacement. Delays in rolling freshly spread mixture will not be permitted. After initial rolling, preliminary tests of crown, grade, and smoothness shall be made by the Contractor. Deficiencies shall be corrected so that the finished course will conform to requirements for grade and smoothness specified herein. Crown, grade, and smoothness will be checked for compliance in each lot of completed pavement by the Contracting Officer and will be evaluated as specified in paragraph ACCEPTABILITY OF WORK. After the crown, grade, and smoothness requirements have been met, rolling shall be continued until a mat density of 98.0 to 100.0 percent and a joint density of at least 96.5 percent of density of laboratory-compacted specimens of the same mixture are obtained. The density will be determined and evaluated as specified in paragraph PERCENT PAYMENT. Places inaccessible to rollers shall be thoroughly compacted with hot hand tampers.

3.11.1 Test Section

At the start of the plant operation, a quantity of mixture shall be prepared sufficient to construct a test section at least 100 to 150 feet long, two spreader widths wide and of thickness to be used in the project. Mixture shall be placed, spread, and rolled with the equipment to be used in the project and in accordance with requirements specified above. This test section will be tested and evaluated as a lot and shall conform to all specification requirements. If approved by the Contracting Officer, the test section may be located in one of the less critical areas of the project pavement construction. Otherwise, it shall be located outside the project paving. If tests results are satisfactory, the test section shall remain in the place as part of the completed pavement if constructed in the project pavement area. If tests indicate that the pavement does not conform to specification requirements, the test section shall be removed and the material disposed of off-site. Necessary adjustments to the plant

operations and rolling procedures shall be made immediately, and another test section constructed, all at no additional cost to the Government. Other additional test sections, as necessary and as directed, shall be constructed and will be sampled and tested for conformance with specification requirements. In no case shall the Contractor start full production of an intermediate or wearing course mixture without approval.

3.11.2 Correcting Deficient Areas

Mixtures that become contaminated or are defective shall be removed to the full thickness of the course. Edges of the area to be removed shall be cut so that the sides are perpendicular and parallel to the direction of traffic and so that the edges are vertical. Edges shall be sprayed with bituminous materials conforming to Section 02748 BITUMINOUS TACK AND PRIME COATS. Fresh paving mixture shall be placed in the excavated areas in sufficient quantity so that the finished surface when compacted will conform to the grade and smoothness requirements. Paving mixture shall be compacted to the density specified herein. Skin patching or feather edging of an area that has been rolled shall not be permitted.

3.12 PROTECTION OF PAVEMENT

After final rolling, no vehicular traffic of any kind shall be permitted on the pavement until the pavement has cooled to 140 degrees F.

3.13 TESTS

The extent and frequency of testing and inspection shall be sufficient to assure that all materials, operations, and finished products meet all requirements of these specifications and at least consist of the following minimum amount. All testing shall be performed by an approved commercial testing laboratory, unless the Contractor has an in-house testing laboratory which has been inspected and approved by the Contracting Officer. The methods used for sampling and testing shall be the same as those specified for Government quality assurance testing. Reports shall be prepared of all testing and inspection and shall be submitted within 24 hours of the time sampling or testing took place. Minimum acceptable extent of testing and inspection shall be as follows:

a. Gradation test shall be made on samples of aggregate from the cold feed, at least one for every 250 tons of each size of aggregate, and more often and at other locations as necessary to maintain uniformity of production.

b. Quality and gradation tests as indicated in Paragraph "2.1 AGGREGATE" shall be made on samples of aggregate as it is delivered to the site, at least one for every 2500 tons of each size of aggregate.

c. Quality and gradation tests shall be made on samples of mineral filler as it is delivered to the site, at least one for every 250 tons of mineral filler, if material other than Portland cement, lime, or fly ash is used as mineral filler.

d. Test depth of uncompacted bituminous courses with a probe, immediately behind the paver and at least once for every 50 ft of lane. No written report is necessary.

e. Test density of the mat and of joints immediately behind rolling operations. Frequency shall be at least as often as specified for

Government acceptance testing, and more often if problems are encountered in attaining required density. Density testing may be performed with a nuclear density meter, provided it is regularly calibrated in the presence of a representative of the Contracting Officer.

f. Tests for asphalt content and Marshall tests (stability, flow, total voids, and voids filled) shall be made as directed, if Government acceptance testing shows there to be a problem with control.

g. Check and recalibrate scales, other measuring devices and batching or proportioning equipment at least once every 5000 tons of bituminous mixture produced. Test grade as necessary to assure that specification requirements are attained.

h. Test surface smoothness as necessary to assure that specification requirements are attained.

i. Continuously check that all placing operations, including construction of joints, conform to all specification requirements. Report problems encountered.

3.14 ACCEPTABILITY OF WORK

3.14.1 General

Testing for acceptability of work will be performed by the Government.

3.14.2 Grade and Surface-Smoothness Requirements

Finished surface of pavements, when tested as specified below and in paragraph Grade shall conform to elevations shown and to the surface smoothness requirements specified.

3.14.2.1 Plan Grade Requirement

Finished surfaces shall conform within tolerances specified to the cross sections indicated. Finished surfaces shall vary not more than 0.03 foot from the plan elevation established and approved at site of work, in accordance with paragraph GRADE CONTROL. Finished surfaces at juncture with other pavements shall coincide with finished surfaces of abutting pavements. Deviation from the plan elevation will not be permitted in areas of pavements where closer conformance with planned elevation is required for the proper functioning of drainage and other appurtenant structures involved. Grade will be determined and evaluated as specified in paragraph Grade.

3.14.2.2 Surface Smoothness Requirement

Except for grade changes, finished surfaces, both for lane interiors and across-joints, shall not deviate from the testing edge of a 12 foot straightedge more than tolerances shown for the respective pavement category in TABLE IV. Surface smoothness will be determined and evaluated as specified in paragraph Surface Smoothness. However, any pavement area having an abrupt offset of 1/8 inch, or more, in the intermediate, or wearing course, in either the lane interior, or at a joint, will be rejected, and the affected area shall be removed and replaced as directed.

TABLE V. SURFACE-SMOOTHNESS TOLERANCES

Pavement Category	Direction of Testing	Tolerance for Intermediate Course	Tolerance for Wearing Course
Runways and taxiways	Longitudinal	1/4	1/8
	Transverse	1/4	1/4
Calibration hardstands and compass swinging bases	Longitudinal	1/4	3/16
	Transverse	1/4	3/16
All other airfields and helicopter paved areas	Longitudinal	1/4	1/4
	Transverse	1/4	1/4

3.15 PERCENT PAYMENT

Where appropriate, adjustment in payment for individual lots of bituminous mixture will be made in accordance with the following paragraphs. No such adjustment in payment will be made for bituminous material (asphalt cement). A lot will be that quantity of construction that will be evaluated for compliance with specification requirements. A lot will be equal to 1000 tons hour's production, except when less than 1000 tons is placed in any one 8 hour shift. In order to evaluate aggregate gradation, asphalt content, and field density, each lot will be divided into four equal sublots. Grade and surface smoothness determinations will be made on the lot as a whole. For field density-determination, one random sample will be taken from the mat, and one random sample will be taken from the joint of each sublot. Each random sample will weigh at least 1250 grams. After air drying to a constant weight, random in-place samples (cores) obtained from the mat (interior of the lane) and from the joints will be used for field density determination using COE CRD-C 650, laboratory density tests of in-place samples taken from the pavement (cores). One sample for determining laboratory density, asphalt content, aggregate gradation will be taken from a loaded truck delivering mixture to each sublot or other appropriate location in the sublot. Asphalt content will be determined in accordance with ASTM D 2172, Method A or B. Gradation of the aggregate will be determined from the recovered aggregate according to ASTM C 136 and ASTM C 117. All samples will be deliberately selected to be truly random, not haphazard, using commonly recognized methods of assuring randomness, employing randomizing tables or computer programs.

3.15.1 Acceptance of Lots

When a lot of material fails to meet the specification requirements, that lot shall be removed and replaced or accepted at a reduced price. The lowest computed percent payment determined for any pavement characteristic (i.e., gradation, asphalt content, density, grade, and smoothness) discussed below shall be the actual percent payment for that lot. The actual percent payment is applied to the bid price and the quantity of bituminous mixture placed in the lot to determine actual payment.

3.15.2 Additional Sampling and Testing

The Contracting Officer reserves the right to direct additional samples and tests for any area which appears to deviate from the specification requirements. Testing in these areas will be in addition to the lot testing, and the requirements for these areas will be the same as those for a lot.

3.15.3 Aggregate Gradation

The mean absolute deviation of the four sublot aggregate gradations from the JMF for each sieve size will be evaluated and compared with TABLE VI. The computed percent payment based on aggregate gradation will be the lowest value determined for any sieve size in TABLE VI. All tests for aggregate gradation will be completed and reported within 24 hours after completion of construction of each lot.

----------EXAMPLE OF COMPUTATIONS----------

The computation of mean absolute deviation for one sieve size and of the computed percent payment for aggregate gradation is illustrated below for typical series of gradation tests.

Assume the following JMF required gradation and test results for aggregate gradation on sublot samples:

Sieve Size	Percent by Weight Passing Sieves				
	JMF	Test No. 1	Test No. 2	Test No. 3	Test No. 4
3/4 inch	100	100	100	100	100
1/2 inch	88	87	88	90	88
3/8 inch	75	72	77	78	74
No. 4	64	60	65	67	62
No. 8	53	50	56	57	52
No. 16	42	39	44	45	41
No. 30	32	30	34	35	32
No. 50	20	17	20	22	21
No. 100	10	8	10	10	11
No. 200	6	4	7	8	6

Mean Absolute Deviation (for NO. 200 Sieve)= ((absolute value of 4-6) + (absolute value of 7-6) + (absolute value of 8-6) + (absolute value of 6-6))/4 = (2+1+2+0)/4 = 1.25

The mean absolute deviation for other sieve sizes can be determined in a similar way for this example to be:

Sieve Size	3/4	1/2	3/8	No. 4	No. 8	No. 16	No. 30	No. 50	No. 100
Mean Absolute Deviation	0	0.75	2.25	2.50	2.75	2.25	1.75	1.50	0.75

Taking the mean absolute deviation as computed above for the No. 200 sieve and the other 9 sieves, and going to Table VI, it is found that the lowest

percent payment would be based on the results for the NO. 200 sieve. This percent payment is 98 and constitutes for this example the computed percent payment based on aggregate gradation.

----------END OF EXAMPLE----------

TABLE VI. PERCENT PAYMENT BASED ON MEAN ABSOLUTE DEVIATION OF AGGREGATE GRADATIONS FROM JMF

Sieve Size	Percent Payment Based On Mean Absolute Deviation from JMF						
	0.0-1.0	1.1-2.0	2.1-3.0	3.1-4.0	4.1-5.0	5.1-6.0	Above 6.0
3/4 inch	100	100	100	100	98	95	90
1/2 inch	100	100	100	100	98	95	90
3/8 inch	100	100	100	100	98	95	90
No. 4	100	100	100	100	98	95	90
No. 8	100	100	100	98	95	90	reject
No. 16	100	100	100	98	95	90	reject
No. 30	100	100	100	98	95	90	reject
No. 50	100	100	100	98	95	90	reject
No. 100	100	98	95	90	90	reject	reject
No. 200	100	98	90	reject	reject	reject	reject

3.15.4 Asphalt Content

The mean absolute deviation of the four asphalt contents (one from each sublot) from the JMF will be evaluated and compared with TABLE VII. The computed percent payment based on asphalt content will be the value determined in accordance with TABLE VII. All asphalt content tests will be completed and reported within 24 hours after completion of construction of each lot.

TABLE VII. PERCENT PAYMENT BASED ON ASPHALT CONTENT

Mean Absolute Deviation of Extracted Asphalt Content from JMF	Percent Payment
0.25 or less	100
0.26-0.35	98
0.36-0.40	95
0.41-0.45	90
Above 0.45	reject

3.15.5 Density Considerations

The average mat density and the average joint density will be expressed as a percentage of the average laboratory density for the lot. The laboratory density for each lot will be determined in accordance with ASTM D 1559 and ASTM D 2726 from four sets of laboratory samples. One sample will be obtained from loaded trucks delivering mixture to each of the four sublots or other appropriate location. These samples will be taken at the same time and location as the samples for aggregate gradation and asphalt content, but will be kept separate from them. Each sample will be divided into three subsamples to produce one set of three laboratory specimens for each sublot. Laboratory specimens will be prepared from asphalt mixture which has not been reheated in the laboratory. Specimens will be compacted in accordance with ASTM D 2726 within 2 hours of the time the mixture was

loaded into trucks at the asphalt plant and before the temperature of the specimen has dropped to 250 degrees F. Insulated containers shall be used as necessary to maintain the temperature. In addition to determining laboratory density on all specimens; Marshall stability, flow, total voids and voids filled, will also be determined for one specimen from each sublot.

3.15.5.1 Field Density

The average field densities for mat and for joints in the lot will be determined and compared with TABLE VIII and used to calculate the computed percent payment based on field density as described below. First, the percent payment deduction for both mat density and joint density will be computed by subtracting the percent payment values found in Table VIII from 100. Then, the weighted percent payment deduction for joint density will be computed by multiplying the percent payment deduction for joint density, as computed above, by the ratio of the total amount of bituminous mixture in the joint strip to the total amount of bituminous mixture in the entire mat in the lot. The area of the joint strip will be considered to be 10 feet wide times the length of completed (lanes on both sides of joint completed) longitudinal construction joint in the lot, but not to exceed the total lot size. The length of joint to be considered will be that length where a new lane has been placed against an adjacent lane of bituminous pavement, either an adjacent freshly paved lane or one paved at any time previously. The percent payment deduction for mat density and the weighted percent payment deduction for joint density will be compared and the greatest selected. This selected percent payment deduction will be subtracted from 100 to obtain the computed percent payment based on field density.

TABLE VIII. PERCENT PAYMENT BASED ON DENSITY

Average Mat Density (4 Cores)	Percent Payment	Average Joint Density (4 Cores)
98.0-100.0	100.0	Above 96.5
97.9	100.0	96.4
97.8, 100.1	99.9	96.3
97.7	99.8	96.2
97.6, 100.2	99.6	96.1
97.5	99.4	96.0
97.4, 100.3	99.1	95.9
97.3	98.7	95.8
97.2, 100.4	98.3	95.7
97.1	97.8	95.6
97.0, 100.5	97.3	95.5
96.9	96.3	95.4
96.8, 100.6	94.1	95.3
96.7	92.2	95.2
96.6, 100.7	90.3	95.1
96.5	87.9	95.0
96.4, 100.8	85.7	94.9
96.3	83.3	94.8
96.2, 100.9	80.6	94.7
96.1	78.0	94.6
96.0, 101.0	75.0	94.5
below 96.0, above 101.0	reject	below 94.5

----------EXAMPLE OF COMPUTATIONS----------

The calculation of computed percent payment based on field density is illustrated below for a typical set of field tests on the mat and on joints in a typical lot.

Assume the following test results for field density made on the lot:

Average Mat Density -- 97.2 percent (of lab density)
Average Joint Density -- 95.5 percent (of lab density)
Total Area of Lot -- 30,000 sq. ft. (3333 sq. yd.)
Length of Completed Longitudinal Construction Joint -- 2000 ft.
(Paving lane on each side of joint complete)

Step 1: Determine percent payment based on mat density and on joint density, using Table VIII:

Mat density of 97.2 percent = 98.3 percent payment

Joint density of 95.5 percent = 97.3 percent payment

Step 2: Determine percent payment deduction based on mat density and on joint density by subtracting each percent payment from 100:

Mat: 100 percent - 98.3 percent = 1.7 percent deduction

Joint: 100 percent - 97.3 percent = 2.7 percent deduction

Step 3: Determine ratio of joint strip area to mat area (total paved area in the lot): Multiply the length of completed longitudinal construction joint by the specified 10 ft. width and divide by the mat area (total paved area in the lot).

(2000 ft. x 10 ft.)/30000 sq. ft. = 0.6667 ratio of joint strip area to mat area

Step 4: Determine the weighted percent payment deduction for joint density:

Multiply percent payment deduction for joint density by ratio of joint strip area to mat area

2.7 percent x 0.6667 = 1.8 percent weighted percent payment deduction for joint density

Step 5: Compare weighted percent payment deduction for mat density and select the larger:

Percent payment deduction for mat density - 1.7 percent

Weighted percent payment deduction for joint density - 1.8 percent

Select the larger = 1.8 percent

Step 6: Determine computed percent payment based on field density by subtracting the larger value from Step 5 from 100:

100 - 1.8 percent = 98.2 percent computed percent payment based on field density

----------END OF EXAMPLE----------

3.15.5.2 Density Samples

All density results on a lot will be completed and reported within 24 hours after the construction of that lot. When the Contracting Officer considers it necessary to take additional samples for density measurements, sampling will be done in groups of four (one for each sublot). The percent payment shall be determined for each additional group of four samples and averaged with the percent payment for the original group to determine the final percent payment. The Contractor shall fill all sample holes with hot mix and compact.

3.15.6 Grade

The finished surface of the pavement will be tested for conformance with specified plan-grade requirements. The finished grade of each pavement area will be determined by running lines of levels at intervals of 25 feet or less longitudinally and transversely to determine the elevation of the completed pavement. Within 5 working days after the completion of placement of a particular lot, the Contracting Officer will inform the Contractor in writing of results of grade-conformance tests. When more than 5 percent of all measurements made within a lot are outside the specified tolerances, the computed percent payment for that lot will be 95 percent. In areas where the grade exceeds the plan-grade tolerances given in paragraph Grade and Surface-Smoothness Requirements by more than 50 percent, the Contracting Officer will require removal of the deficient area and replacement with fresh paving mixture. Sufficient material shall be removed to allow at least 1 inch of asphalt concrete to be placed. Skin patching for correcting low areas or planing or milling for correcting high areas shall not be permitted on the wearing course.

3.15.7 Surface Smoothness

After the completion of final rolling of a lot, the compacted surface will be tested by the Contracting Officer with a 12 foot straightedge. Measurements will be made perpendicular to and across all joints at equal distances along the joint not to exceed 25 feet. Location and deviation from straightedge for all measurements will be recorded. When more than 5 percent of all measurements along the joints or along the mat within a lot exceed the specified tolerance, the computed percent payment for that lot will be 95 percent. Any joint or mat area surface deviation which exceeds the surface-smoothness tolerances given in paragraph Grade and Surface-Smoothness Requirements by more than 50 percent shall be corrected to meet the specification requirements. The Contractor shall remove the deficient area and replace with fresh paving mixture at no additional cost to the Government. Sufficient material shall be removed to allow at least 1 inch of asphalt concrete to be placed. Skin patching for correcting low areas or planing or milling for correcting high areas shall not be permitted.

3.16 CONSTRUCTION QUALITY CONTROL

Attention is directed to the applicable sections which requires the Contractor to perform quality control inspection, testing, and reporting.

-- End of Section --

SECTION TABLE OF CONTENTS

DIVISION 02 - SITE WORK

SECTION 02754

CONCRETE PAVEMENTS FOR SMALL PROJECTS

PART 1 GENERAL

1.1 SCOPE OF WORK
1.2 REFERENCES
1.3 SYSTEM DESCRIPTION
1.4 MEASUREMENT AND PAYMENT
1.4.1 Measurement
1.4.2 Payment
1.5 ACCEPTABILITY OF WORK
1.5.1 Evaluation Sampling
1.5.2 Surface Testing
1.5.2.1 Surface Smoothness Requirements
1.5.2.2 Surface Smoothness Testing Method
1.5.2.3 Profilograph Equipment and Testing
1.5.3 Plan Grade Testing and Conformance
1.6 PRECONSTRUCTION TESTING OF MATERIALS
1.7 SUBMITTALS
1.8 EQUIPMENT
1.8.1 Batching and Mixing
1.8.2 Transporting Equipment
1.8.3 Delivery Equipment
1.8.4 Paver-Finisher
1.8.4.1 Paver-Finisher with Fixed Forms
1.8.4.2 Slipform Paver-Finisher
1.8.4.3 Other Types of Finishing Equipment
1.8.5 Curing Equipment
1.8.6 Texturing Equipment
1.8.6.1 Fabric Drag
1.8.7 Sawing Equipment
1.8.8 Straightedge

PART 2 PRODUCTS

2.1 CEMENTITIOUS MATERIALS
2.1.1 Portland Cement
2.1.2 High-Early-Strength Portland Cement
2.1.3 Pozzolan (Fly Ash)
2.2 AGGREGATES
2.2.1 Coarse Aggregate
2.2.2 Fine Aggregate
2.3 CHEMICAL ADMIXTURES
2.4 CURING MATERIALS
2.5 WATER
2.6 JOINT MATERIALS
2.6.1 Expansion Joint Material
2.6.2 Slip Joint Material

2.7 REINFORCING
2.7.1 General
2.8 DOWELS
2.9 EPOXY RESIN
2.10 SPECIFIED CONCRETE STRENGTH AND OTHER PROPERTIES
2.11 MIXTURE PROPORTIONS
2.11.1 Composition Concrete
2.11.2 Concrete Mixture Proportioning Studies
2.11.3 Mixture Proportioning Procedure
2.11.4 Average Strength Required for Mixtures

PART 3 EXECUTION

3.1 CONDITIONING OF UNDERLYING MATERIAL
3.2 WEATHER LIMITATIONS
3.2.1 Hot Weather Paving
3.2.2 Cold Weather Paving
3.3 CONCRETE PRODUCTION
3.3.1 General Requirements
3.3.2 Transporting and Transfer-Spreading Operations
3.4 PAVING
3.4.1 Consolidation
3.4.2 Operation
3.4.3 Required Results
3.4.4 Fixed Form Paving
3.4.5 Slipform Paving
3.4.6 Placing Reinforcing Steel
3.4.7 Placing Dowels
3.4.7.1 Construction Joints-Fixed Form Paving
3.4.7.2 Dowels Installed in Hardened Concrete
3.4.7.3 Expansion Joints
3.5 FINISHING
3.5.1 Machine Finishing With Fixed Forms
3.5.2 Surface Correction
3.5.3 Hand Finishing
3.5.4 Texturing
3.5.4.1 Fabric-Drag Surface Finish
3.5.5 Edging
3.6 CURING
3.6.1 Membrane Curing
3.6.2 Moist Curing
3.7 JOINTS
3.7.1 Longitudinal Construction Joints
3.7.2 Transverse Construction Joints
3.7.3 Expansion Joints
3.7.4 Slip Joints
3.7.5 Contraction Joints
3.7.5.1 Sawed Joints
3.7.6 Thickened Edge Joints
3.8 REPAIR, REMOVAL, AND REPLACEMENT OF SLABS
3.8.1 Removal and Replacement of Full Slabs
3.8.2 Repairing Spalls Along Joints
3.8.3 Areas Defective in Plan Grade or Smoothness
3.9 EXISTING CONCRETE PAVEMENT REMOVAL AND REPAIR
3.10 PAVEMENT PROTECTION
3.11 TESTING AND INSPECTION FOR CONTRACTOR QUALITY CONTROL (CQC)
3.11.1 Batch Plant Control
3.11.2 Concrete Mixture
3.11.3 Inspection Before Placing

3.11.4 Paving Operations
3.11.5 Curing Inspection
3.11.6 Cold-Weather Protection
3.11.7 Reports
3.12 CONSTRUCTION QUALITY CONTROL

-- End of Section Table of Contents --

SECTION 02754
CONCRETE PAVEMENTS FOR SMALL PROJECTS

PART 1 GENERAL

1.1 SCOPE OF WORK

This specification shall be used for the full depth repairs of existing concrete pavement and new heavy duty concrete pavement required **2,500 cubic yard or less** of Portland Cement Concrete.

1.2 REFERENCES

The publications listed below form a part of this specification to the extent referenced. The publications are referred to in the text by basic designation only.

ACI INTERNATIONAL (ACI)

ACI 211.1	(1991) Standard Practice for Selecting Proportions for Normal, Heavyweight, and Mass Concrete
ACI 301	(1996) Standard Specification for Structural Concrete
ACI 305R	(1991) Hot Weather Concreting

AMERICAN SOCIETY FOR TESTING AND MATERIALS (ASTM)

ASTM A 184	(1990) Fabricated Deformed Steel Bar Mats for Concrete Reinforcement
ASTM A 615	(1996) Deformed and Plain Billet-Steel Bars for Concrete Reinforcement
ASTM C 31	(1996) Making and Curing Concrete Test Specimens in the Field
ASTM C 33	(1993) Concrete Aggregates
ASTM C 39	(1996) Compressive Strength of Cylindrical Concrete Specimens
ASTM C 94	(1996) Ready-Mixed Concrete
ASTM C 123	(1994) Lightweight Pieces in Aggregate
ASTM C 143	(1990a) Slump of Hydraulic Cement Concrete
ASTM C 150	(1996) Portland Cement
ASTM C 192	(1990a) Making and Curing Concrete Test Specimens in the Laboratory

ASTM C 231	(1991b) Air Content of Freshly Mixed Concrete by the Pressure Method
ASTM C 260	(1995) Air-Entraining Admixtures for Concrete
ASTM C 494	(1992) Chemical Admixtures for Concrete
ASTM C 618	(1996a) Coal Fly Ash and Raw or Calcined Natural Pozzolan for Use as a Mineral Admixture in Portland Cement Concrete
ASTM C 881	(1990) Epoxy-Resin-Base Bonding Systems for Concrete
ASTM C 1077	(1995a) Laboratories Testing Concrete and Concrete Aggregates for Use in Construction and Criteria for Laboratory Evaluation
ASTM D 1752	(1984; R 1992) Preformed Sponge Rubber and Cork Expansion Joint Fillers for Concrete Paving and Structural Construction

ARMY CORPS OF ENGINEERS (COE)

COE CRD-C 130	(1989) Scratch Hardness of Coarse Aggregate Particles
COE CRD-C 300	(1990) Specifications for Membrane-Forming Compounds for Curing Concrete

NATIONAL READY-MIXED CONCRETE ASSOCIATION (NRMCA)

NRMCA CPMB 100	(1990) Concrete Plant Standards

1.3 SYSTEM DESCRIPTION

This section is intended to stand alone for construction of concrete (rigid) pavement. However, where the construction covered herein interfaces with other sections, the construction at each interface shall conform to the requirements of both this section and the other section, including tolerances for both.

1.4 MEASUREMENT AND PAYMENT

1.4.1 Measurement

The quantity of concrete to be paid for will be the volume of concrete in cubic yards except items specified under Section 02770 CONCRETE SIDEWALKS, HANDICAP RAMPS, CURBS AND GUTTERS. Work shall include concrete pads and pavements, where required, placed in the completed and accepted pavement. Concrete will be measured in place in the completed and accepted pavement only within the neat line dimensions shown in the plan and cross section.

1.4.2 Payment

Payment will be made at the contract price for the the base year Line Item 0013AI "CONCRETE PADS" of the Pricing Schedule. Payment will constitute

full compensation for furnishing all materials, equipment, plant and tools, and for all labor and other incidentals necessary to complete the concrete pavement. No separate payment will be made for any cementitious materials, admixtures, steel reinforcement, dowels or tie bars, or for any joint materials.

1.5 ACCEPTABILITY OF WORK

The pavement will be accepted on the basis of tests made by the Government and by the Contractor or its suppliers, as specified herein. The Government may, at its discretion, make check tests to validate the results of the Contractor's testing. Concrete samples shall be taken by the Contractor at the placement to determine the slump, air content, and strength of the concrete. Test cylinders shall be made for determining conformance with the strength requirements of these specifications and, when required, for determining the time at which pavements may be placed into service. All air content measurements shall be determined in accordance with ASTM C 231. All slump tests shall be made in accordance with ASTM C 143. All test cylinders shall be 6 by 12 inch cylinders and shall be fabricated in accordance with ASTM C 192, using only steel molds, cured in accordance with ASTM C 31, and tested in accordance with ASTM C 39. A strength test shall be the average of the strengths of two cylinders made from the same sample of concrete and tested at 28 days. The Contractor shall furnish all materials, labor, and facilities required for molding, curing, testing, and protecting test specimens at the site and in the laboratory.

1.5.1 Evaluation Sampling

Sampling, testing, and mixture proportioning shall be performed by a commercial Testing Laboratory, conforming with ASTM C 1077. The individuals who sample and test concrete and concrete constituents shall be certified as American Concrete Institute (ACI) Concrete Field Testing Technicians, Grade I. The individuals who perform the inspection of concrete shall be certified as ACI Concrete Construction Inspector, Level II. All mix design, weekly quality control reports, smoothness reports, and project certification reports shall be signed by a Registered Engineer.

1.5.2 Surface Testing

Surface testing for surface smoothness, edge slump and plan grade shall be performed as indicated below by the Testing Laboratory. The measurements shall be properly referenced in accordance with paving lane identification and stationing, and a report given to the Government within 24 hours after measurement is made. A final report of surface testing, signed by a Registered Engineer, containing all surface measurements and a description of all actions taken to correct deficiencies, shall be provided to the Government upon conclusion of surface testing.

1.5.2.1 Surface Smoothness Requirements

The finished surfaces of the pavements shall have no abrupt change of 1/8 inch or more, and all pavements shall be within the tolerances specified in Table 1 when checked with the straightedge. The finished surface in the longitudinal direction or the transverse direction can be tested using a California Profilograph. Measurements taken with the California Profilograph shall have a Profile Index no greater than 9 inches per mile for helipad and aprons.

TABLE 1
STRAIGHTEDGE SURFACE SMOOTHNESS--PAVEMENTS

Pavement Category	Direction of Testing	Tolerances inches
Runways and Taxiways	Longitudinal	1/8
	Transverse	1/4
Calibration Hardstands & Compass Swinging Bases	Longitudinal	1/8
	Transverse	1/8
All Other Airfield and Helicopter Paved Areas	Longitudinal	1/4
	Transverse	1/4
Tank Hardstands, Parking Areas, Open Storage Areas	Longitudinal	1/4
	Transverse	1/4

1.5.2.2 Surface Smoothness Testing Method

The surface of the pavement shall be tested with the straightedge to identify all surface irregularities exceeding the tolerances specified above. The entire area of the pavement shall be tested in both a longitudinal and a transverse direction on parallel lines approximately 15 feet apart. The straightedge shall be held in contact with the surface and moved ahead one-half the length of the straightedge for each successive measurement. The amount of surface irregularity shall be determined by placing the straightedge on the pavement surface and allowing it to rest upon the two highest spots covered by its length and measuring the maximum gap between the straightedge and the pavement surface, in the area between these two high points.

1.5.2.3 Profilograph Equipment and Testing

Profilograph testing shall be performed using approved equipment and procedures described in State of California, Department of Transportation, Division of Construction, California Test 526 "Operation of California Profilograph and Evaluation of Profiles". The equipment shall utilize electronic recording and automatic computerized reduction of data to indicate "must-grind" bumps and the Profile Index for the pavement. The profilograph shall be operated by an approved, factory-trained operator on the alignments specified. A copy of the reduced tapes shall be furnished to the Government at the end of each day's operation. The California profilograph shall be calibrated prior to usage to the Contracting Officer's satisfaction. When the California Profilograph is utilized for smoothness determination, it shall be typically performed in runs exceeding 200 feet. If the extent of the pavement in either direction is less than 200 feet, that direction shall be tested by the straightedge method and shall meet such requirements. Acceptable criteria for acceptance shall be the average of all runs in a single direction done on a feature, that is less than the specified Profile Index indicated in paragraph "1.4.2.1 Surface Smoothness Requirements". If any run has a Profile Index greater than the Profile Index, the Contractor shall stop the operation and make additional measurements to define the problem and perform corrective actions to get it back into the specifications. No single run shall exceed

the specified Profile Index by more than 4.0 inches per mile without requiring complete removal and replacement at no cost to the government. Submittal of results shall be signed by a Registered Engineer.

1.5.3 Plan Grade Testing and Conformance

The finished surface of the pavements shall conform, within the tolerances shown in Table 1, to the lines, grades, and cross sections shown. The finished surface of new abutting pavements shall coincide at their juncture. The finished surface of airfield runway, taxiway, and apron pavements shall vary not more than 0.04 foot above or below the plan grade line or elevation indicated. The surfaces of other pavements shall vary not more than 0.06 foot above or below the plan grade line or elevation indicated. Each pavement category shall be checked by the Contractor for conformance with plan grade requirements by running lines of levels at intervals to determine the elevation at each joint intersection.

1.6 PRECONSTRUCTION TESTING OF MATERIALS

The Contractor shall not be entitled to any additional payment or extension of time because of delays caused by sampling and testing additional sources, or samples, necessitated by failure of any samples. Aggregates shall be sampled and tested by the Test Laboratory and shall be representative of the materials to be used for the project. The Contractor shall indicate the Aggregate source and its location. Test results, signed by a Registered Engineer, shall be submitted 60 days before commencing paving. No aggregate shall be used unless test results show that it meets all requirements of these specifications, including compliance with ASTM C 33 and deleterious materials limitations.

1.7 SUBMITTALS

Government approval is required for submittals with a "GA" designation; submittals having an "FIO" designation are for information only. The following shall be submitted in accordance with Section 01330 SUBMITTAL PROCEDURES:

SD-01 Data

Equipment; GA.

Manufacturer's literature on the concrete plant; mixing equipment; hauling equipment; placing and finishing, and curing equipment; at least 60 days prior to start of paving.

SD-07 Schedules

Paving; GA.

Paving Schedules at least 14 days prior to start of paving.

SD-08 Statements

Mixture Proportions; GA.

The report of the Contractor's mixture proportioning studies, signed by a Registered Engineer, included all test breaks showing the proportions of all ingredients and supporting information on aggregate and other materials that will be used in the manufacture of concrete, at least 60 days prior to

commencing concrete placing operations.

Placement Inspections; FIO.

Inspection certification by a Registered Engineer shall be submitted prior to each day's paving.

Smoothness & CQC Reports; FIO.

Smoothness and CQC Reports shall be submitted and certified by a Registered Engineer and provided prior to each day's paving.

1.8 EQUIPMENT

1.8.1 Batching and Mixing

The batching plant shall conform to NRMCA CPMB 100, the equipment requirements in ASTM C 94, and as specified. Water shall not be weighed or measured cumulatively with another ingredient. All concrete materials batching shall meet ASTM C 94 requirements. Mixers shall be stationary mixers or truck mixers. Batching, mixers, mixing time, permitted reduction of mixing time, and concrete uniformity shall meet the requirements of ASTM C 94, and shall be documented in the initial weekly QC Report.

1.8.2 Transporting Equipment

Transporting equipment shall be in conformance with ASTM C 94 and as specified herein. Concrete shall be transported to the paving site in rear-dump trucks, in truck mixers designed with extra large blading and rear opening specifically for low slump concrete, or in agitators. Bottom-dump trucks shall not be used for delivery of concrete.

1.8.3 Delivery Equipment

When concrete transport equipment cannot operate on the paving lane, side-delivery transport equipment consisting of self-propelled moving conveyors shall be used to deliver concrete from the transport equipment and discharge it in front of the paver. Front-end loaders, dozers, or similar equipment shall not be used to distribute the concrete.

1.8.4 Paver-Finisher

The paver-finisher shall be a heavy-duty, self-propelled machine designed specifically for paving and finishing high quality pavement. The paver-finisher shall weigh at least 2200 lb./foot of lane width, and shall be powered by an engine having at least 6.0 horsepower per foot of lane width. The paver-finisher shall spread, consolidate, and shape the plastic concrete to the desired cross section in one pass. The paver-finisher shall be equipped with a full width "knock-down" auger, capable of operating in both directions, which will evenly spread the fresh concrete in front of the screed or extrusion plate. Immersion vibrators shall be gang mounted at the front of the paver on a frame equipped with suitable controls so that all vibrators can be operated at any desired depth within the slab or completely withdrawn from the concrete. The vibrators shall be automatically controlled so that they will be immediately stopped as forward motion of the paver ceases. The spacing of the immersion vibrators across the paving lane shall be as necessary to properly consolidate the concrete, but the clear distance between vibrators shall not exceed 30 inches, and the outside vibrators shall not exceed 12 inches from the edge

of the lane. The paver-finisher shall be equipped with a transversely oscillating screed or an extrusion plate to shape, compact, and smooth the surface.

1.8.4.1 Paver-Finisher with Fixed Forms

The paver-finisher shall be equipped with wheels designed to ride the forms, keep it aligned with the forms, and to spread the load so as to prevent deformation.

1.8.4.2 Slipform Paver-Finisher

The slipform paver-finisher shall be automatically controlled and crawler mounted with padded tracks. Horizontal alignment shall be electronically referenced to a taut wire guideline. Vertical alignment shall be electronically referenced on both sides of the paver to a taut wire guideline, to an approved laser control system, or to a ski operating on a completed lane. Control from a slope-adjustment control or control operating from the underlying material shall not be used.

1.8.4.3 Other Types of Finishing Equipment

Bridge deck finishers shall be used for pavements 10 inches or less in thickness, where longitudinal and transverse surface smoothness tolerances are 1/4 inch or greater. Clary screeds or other rotating tube floats will not be allowed on the project.

1.8.5 Curing Equipment

Equipment for curing is specified in paragraph CURING.

1.8.6 Texturing Equipment

Texturing equipment shall be as specified below.

1.8.6.1 Fabric Drag

A fabric drag shall consist of a piece of fabric material as wide as the lane width securely attached to a separate wheel mounted frame spanning the paving lane or to one of the other similar pieces of equipment. The material shall be wide enough to provide 12 to 18 inches dragging flat on the pavement surface. The fabric material shall be clean, reasonably new burlap, kept clean and saturated during use.

1.8.7 Sawing Equipment

Equipment for sawing joints and for other similar sawing of concrete shall be standard diamond-tip-bladed concrete saws mounted on a wheeled chassis.

1.8.8 Straightedge

The Contractor shall furnish and maintain at the job site one 12 foot straightedge for testing concrete surface smoothness. The straightedge shall be constructed of aluminum or magnesium alloy and shall have blades of box or box-girder cross section with flat bottom, adequately reinforced to insure rigidity and accuracy. Straightedges shall have handles for operation on the pavement.

PART 2 PRODUCTS

2.1 CEMENTITIOUS MATERIALS

Cementitious materials shall be portland cement and pozzolan and shall conform to appropriate specifications listed below.

2.1.1 Portland Cement

Portland cement shall conform to ASTM C 150 Type II, low-alkali.

2.1.2 High-Early-Strength Portland Cement

ASTM C 150, Type III with tricalcium aluminate limited to 5 percent, low alkali. Type III cement shall be used only in isolated instances and only when approved in writing.

2.1.3 Pozzolan (Fly Ash)

Fly ash shall conform to ASTM C 618 Class F, including all the supplementary optional physical requirements.

2.2 AGGREGATES

Aggregates shall consist of clean, hard, uncoated particles meeting the requirements of ASTM C 33, including deleterious materials, abrasion loss and soundness requirements of ASTM C 33, and other requirements specified herein.

2.2.1 Coarse Aggregate

Coarse aggregate shall consist of crushed and/or uncrushed gravel crushed stone, or a combination thereof. The nominal maximum size of the coarse aggregate shall be 1 1/2 inches. When the nominal maximum size is greater than 1 inch, the aggregates shall be furnished in two ASTM C 33 size groups, No. 67 and No. 4. The amount of deleterious material in each size of coarse aggregate shall not exceed the limits shown in ASTM C 33 Class 1N, 4M or 4S, depending on the weathering region, and the following limits:

a. Lightweight particles 1.0 max. percent by mass (ASTM C 123).

b. Other soft particles 2.0 max. percent by mass (COE CRD-C 130).

c. Total of all deleterious 5.0 max. percent by mass (substances listed in ASTM C 33 and above, exclusive of material finer than No. 200 sieve).

d. The separation medium for lightweight particles shall have a density of Sp. Gr. of 2.0.

2.2.2 Fine Aggregate

Fine aggregate shall consist of natural sand, manufactured sand, or a combination of the two, and shall be composed of clean, hard, durable particles. All fine aggregate shall be composed of clean, hard, durable particles meeting the requirements of ASTM C 33 and the requirements herein. The amount of deleterious material in the fine aggregate shall not exceed the limits in ASTM C 33and shall not exceed the following limits:

a. Lightweight particles (ASTM C 123) 1.0 percent max. by mass using

a medium with a density of Sp. Gr. of 2.0.

b. The total of all deleterious material types, listed in ASTM C 33 and above, shall not exceed 3.0 percent of the mass of the fine aggregate.

2.3 CHEMICAL ADMIXTURES

Air-entraining admixture shall conform to ASTM C 260. An accelerator shall be used only when specified in paragraph SPECIFIED CONCRETE STRENGTH AND OTHER PROPERTIES and shall not be used to reduce the amount of cementitious material used. Accelerator shall conform to ASTM C 494 Type C. Calcium chloride and admixtures containing calcium chloride shall not be used. A water-reducing or retarding admixture shall meet the requirements of ASTM C 494. Type G or H admixtures are not allowed.

2.4 CURING MATERIALS

Membrane forming curing compound shall be a white pigmented compound conforming to COE CRD-C 300. Burlap shall be new or shall be clean material never used for anything other than curing concrete.

2.5 WATER

Water for mixing and curing shall be clean, potable, and free of injurious amounts of oil, acid, salt, or alkali.

2.6 JOINT MATERIALS

2.6.1 Expansion Joint Material

Expansion joint filler shall be a preformed material conforming to ASTM D 1752. Expansion joint filler shall be 3/4 inch thick.

2.6.2 Slip Joint Material

Slip joint material shall be 1/4 inch thick expansion joint filler conforming to ASTM D 1752.

2.7 REINFORCING

2.7.1 General

Reinforcing bars shall conform to ASTM A 615 Grade 60. Bar mats shall conform to ASTM A 184. Reinforcement shall be free from loose, flaky rust, loose scale, oil, grease, mud, or other coatings that might reduce the bond with concrete.

2.8 DOWELS

Dowels shall be single piece, plain (non-deformed) steel bars conforming to ASTM A 615 Grade 60 or higher. Dowels shall be free of loose, flaky rust and loose scale and shall be clean and straight.

2.9 EPOXY RESIN

All epoxy-resin materials shall be two-component materials conforming to ASTM C 881, Class as appropriate for each application temperature to be encountered; except, that in addition, the materials shall meet the

following requirements:

a. Material for use for embedding dowels and anchor bolts shall be Type IV, Grade 3.

b. Material for use as patching for complete filling of spalls, wide cracks, and other voids and for use in preparing epoxy resin mortar shall be Type III, Grade as approved.

c. Material for injecting cracks shall be Type IV, Grade 1.

d. Material for bonding freshly mixed portland cement concrete, mortar, or freshly mixed epoxy resin concrete to hardened concrete shall be Type V, Grade as approved.

2.10 SPECIFIED CONCRETE STRENGTH AND OTHER PROPERTIES

The compressive strength (f'c) for the heavy duty airfield pavement and other heavy duty concrete work shall be 5000 psi at 28 days. Minor concrete work such as headwall footings shall have compressive strength of 3,000 psi at 28 days. Maximum allowable water-cementitious material ratio is 0.45. The water-cementitious material ratio is based on absolute volume equivalency, where the ratio is determined using the weight of cement for a cement only mix, or using the total volume of cement plus pozzolan converted to an equivalent weight of cement by the absolute volume equivalency method described in ACI 211.1. For this project the use of fly ash for all concrete paving shall be mandatory. The concrete shall be air-entrained with a total air content of 4 plus or minus 1 percent. The maximum allowable slump of the concrete shall be 3 inches for pavement constructed with fixed forms. The strength of the concrete will be considered satisfactory so long as the average of all sets of three consecutive test results equals or exceeds the specified compressive strength f'c and no individual test result falls below the specified strength f'c by more than 500 psi. Additional analysis or testing, including taking cores and/or load tests may be required at the Contractor's expense when the strength of the concrete in the structure is considered potentially deficient.

2.11 MIXTURE PROPORTIONS

2.11.1 Composition Concrete

Composition concrete shall be composed of cementitious material, water, fine and coarse aggregates, and admixtures. Fly ash shall be used only at a rate between 15 and 35 percent by mass of the total cementitious material. Admixtures shall consist of air entraining admixture and may also include water-reducing admixture. High range water-reducing admixtures and admixtures to produce flowable concrete shall not be used. No substitutions shall be made in the materials used in the mixture proportions without additional tests to show that the quality of the concrete is satisfactory.

2.11.2 Concrete Mixture Proportioning Studies

Trial design batches, mixture proportioning studies, and testing shall be the responsibility of the Contractor, and shall be performed by the Test Laboratory and signed by a Registered Engineer. No concrete pavement shall be placed until the Contracting Officer has approved the Contractor's mixture proportions. All materials used in mixture proportioning studies

shall be representative of those proposed for use on the project. If there is a change in materials, additional mixture design studies shall be made using the new materials. Trial mixtures having proportions, slumps, and air content suitable for the work shall be based on methodology described in ACI 211.1. At least three different water-cementitious ratios, separated by a minimum of 0.05 which will produce a range of strength encompassing that required on the project, shall be used. Laboratory trial mixtures shall be proportioned for maximum permitted slump and air content. Maximum sand content shall be 40 percent of the total aggregate SSD weight. Aggregate quantities shall be based on the mass in a saturated surface dry condition.

2.11.3 Mixture Proportioning Procedure

The Contractor shall perform the following:

a. Fabricate, cure and test 6 test cylinders per age for each mixture at 7 and 28 days.

b. Using the average strength for each w/(c+p), plot the results from each of the three mixtures on separate graphs for w/(c+p) versus 28-day strength. The ratio w/(c+p) is the water-cementitious ratio, or water to quantity Portland cement plus pozzolan.

c. From the graphs select a w/(c+p) which will produce a mixture giving a 28-day strength equal to the required strength determined in accordance with the following paragraph.

2.11.4 Average Strength Required for Mixtures

In order to ensure meeting, during production, the strength requirements specified, the mixture proportions selected shall produce a required average strength, f'cr, exceeding the specified strength, f'c, in accordance with procedures in Chapter 3 of ACI 301, "Proportioning."

PART 3 EXECUTION

3.1 CONDITIONING OF UNDERLYING MATERIAL

Underlying material, base course or subgrade, upon which concrete is to be placed shall be clean, damp, and free from debris, waste concrete or cement, frost, ice, and standing or running water. If any paving or other Construction equipment causes any disturbance to the underlying materials, the Contractor shall get the equipment off. Any disturbance to the underlying material shall be corrected immediately.

3.2 WEATHER LIMITATIONS

3.2.1 Hot Weather Paving

The temperature of concrete shall not exceed 90 degrees F. Steel forms, dowels and reinforcing shall be cooled prior to concrete placement when steel temperatures are greater than 120 degrees F.

3.2.2 Cold Weather Paving

The ambient temperature of the air at the placing site and the temperature of surfaces to receive concrete shall be not less 40 degrees F.The temperature of the concrete when placed shall be not less than 50 degrees F. Materials entering the mixer shall be free from ice, snow, or frozen lumps. Salt, chemicals or other materials shall not be incorporated in the concrete to prevent freezing. Upon written approval, chemical admixture conforming to ASTM C 494 Type C or E may be used provided it contains no calcium chloride. Calcium chloride shall not be used at any time. Covering and other means shall be provided for maintaining the concrete at a temperature of at least 50 degrees F for not less than 72 hours after placing, and at a temperature above freezing for the remainder of the curing period. Pavement damaged by freezing shall be completely removed and replaced at the Contractor's expense as specified in paragraph, REPAIR, REMOVAL, AND REPLACEMENT OF SLABS.

3.3 CONCRETE PRODUCTION

3.3.1 General Requirements

Concrete shall be deposited in front of the paver within 45 minutes from the time cement has been charged into the mixing drum, except that if the ambient temperature is above 90 degrees F, the time shall be reduced to 30 minutes. Every load of concrete delivered to the paving site shall be accompanied by a batch ticket from the operator of the batching plant. Tickets shall show at least the mass, or volume, of all ingredients in each batch delivered, and the time of day. Tickets shall be delivered to the placing foreman who shall keep them on file and deliver them to the Government daily.

3.3.2 Transporting and Transfer-Spreading Operations

Non-agitating equipment shall be used only on smooth roads and for haul time less than 15 minutes. Equipment shall be allowed to operate on the underlying material only if no damage is done to the underlying material and its degree of compaction. Any disturbance to the underlying material that does occur shall be corrected before the paver-finisher reaches the location of the disturbance and the equipment shall be replaced or procedures changed to prevent any future damage. Additional water may be added to truck mixers to bring the slump within the specified range provided the mixture water-cement ratio is not exceeded.

3.4 PAVING

Pavement shall be constructed with paving and finishing equipment utilizing fixed forms.

3.4.1 Consolidation

The paver vibrators shall be inserted into the concrete not closer to the underlying material than 2 inches. The vibrators or any tamping units in front of the paver shall be automatically controlled so that they shall be stopped immediately as forward motion ceases. Excessive vibration shall not be permitted. Concrete in small, odd-shaped slabs or in locations inaccessible to the paver mounted vibration equipment shall be vibrated with a hand-operated immersion vibrator. Vibrators shall not be used to transport or spread the concrete.

3.4.2 Operation

When the paver is operated between or adjacent to previously constructed pavement (fill-in lanes), provisions shall be made to prevent damage to the previously constructed pavement, including keeping the existing pavement surface free of any debris, and placing rubber mats beneath the paver tracks. Transversely oscillating screeds and extrusion plates shall overlap the existing pavement the minimum possible, but in no case more than 8 inches.

3.4.3 Required Results

The paver-finisher shall be operated to produce a thoroughly consolidated slab throughout, true to line and grade within specified tolerances. The paver-finishing operation shall produce a surface finish free of irregularities, tears, voids of any kind, and any other discontinuities. It shall produce only a very minimum of paste at the surface. Multiple passes of the paver-finisher shall not be permitted. The equipment and its operation shall produce a finished surface requiring no hand finishing, other than the use of cutting straightedges, except in very infrequent instances. No water, other than true fog sprays (mist), shall be applied to the concrete surface during paving and finishing.

3.4.4 Fixed Form Paving

Forms shall be steel, except that wood forms may be used for curves having a radius of 150 feet or less, and for fillets. Forms may be built up with metal or wood, added only to the base, to provide an increase in depth of not more than 25 percent. The base width of the form shall be not less than eight-tenths of the vertical height of the form, except that forms 8 inches or less in vertical height shall have a base width not less than the vertical height of the form. Wood forms for curves and fillets shall be adequate in strength and rigidly braced. Forms shall be set on firm material cut true to grade so that each form section when placed will be firmly in contact with the underlying layer for its entire base. Forms shall not be set on blocks or on built-up spots of underlying material. Forms shall remain in place at least 12 hours after the concrete has been placed. Forms shall be removed without injuring the concrete.

3.4.5 Slipform Paving

The slipform paver shall shape the concrete to the specified and indicated cross section in one pass, and shall finish the surface and edges so that only a very minimum amount of hand finishing is required. Dowels shall not be installed by dowel inserters attached to the paver or by any other means of inserting the dowels into the plastic concrete.

3.4.6 Placing Reinforcing Steel

Reinforcement shall be positioned on suitable chairs securely fastened to the subgrade prior to concrete placement, or may be placed on an initial layer of consolidated concrete, with the subsequent layer placed within 30 minutes of the first layer placement.

3.4.7 Placing Dowels

Dowels shall be installed with alignment not greater than 1/8 inch per ft. Except as otherwise specified below, location of dowels shall be within a horizontal tolerance of plus or minus 5/8 inch and a vertical tolerance of plus or minus 3/16 inch. The portion of each dowel intended to move within the concrete or expansion cap shall be painted with one coat of rust

inhibiting primer paint, and then oiled just prior to placement. Dowels in joints shall be omitted when the center of the dowel is located within a horizontal distance from an intersecting joint equal to or less than one-fourth of the slab thickness.

3.4.7.1 Construction Joints-Fixed Form Paving

Installation of dowels shall be by the bonded-in-place method, supported by means of devices fastened to the forms. Installation by removing and replacing in preformed holes will not be permitted.

3.4.7.2 Dowels Installed in Hardened Concrete

Installation shall be by bonding the dowels into holes drilled into the hardened concrete. Holes approximately 1/8 inch greater in diameter than the dowels shall be drilled into the hardened concrete. Dowels shall be bonded in the drilled holes using epoxy resin injected at the back of the hole before installing the dowel and extruded to the collar during insertion of the dowel so as to completely fill the void around the dowel. Application by buttering the dowel shall not be permitted. The dowels shall be held in alignment at the collar of the hole, after insertion and before the grout hardens, by means of a suitable metal or plastic collar fitted around the dowel. The vertical alignment of the dowels shall be checked by placing the straightedge on the surface of the pavement over the top of the dowel and measuring the vertical distance between the straightedge and the beginning and ending point of the exposed part of the dowel.

3.4.7.3 Expansion Joints

Dowels in expansion joints shall be installed by the bonded-in-place method or by bonding into holes drilled in hardened concrete, using procedures specified above.

3.5 FINISHING

Clary screeds, "bridge deck" finishers, or other rotating pipe or tube type equipment shall not be permitted. The sequence of machine operations shall be transverse finishing, longitudinal machine floating if used, straightedge finishing, texturing, and then edging of joints. Hand finishing shall be used only infrequently and only on isolated areas of odd slab shapes and in the event of a breakdown of the mechanical finishing equipment. Supplemental hand finishing for machine finished pavement shall be kept to an absolute minimum. Equipment to be used for supplemental hand finishing shall primarily be 10 to 12 feet cutting straightedges; only very sparing use of bull floats shall be allowed. At no time shall water be added to the surface of the slab in any way, except for fog (mist) sprays to prevent plastic shrinkage cracking.

3.5.1 Machine Finishing With Fixed Forms

The machine shall be designed to ride the forms. Machines that cause displacement of the forms shall be replaced. The machine shall make only one pass over each area of pavement. If the equipment and procedures do not produce a surface of uniform texture, true to grade, in one pass, the operation shall be immediately stopped and the equipment, mixture, and procedures adjusted as necessary.

3.5.2 Surface Correction

While the concrete is still plastic, irregularities and marks in the pavement surface shall be eliminated by means of cutting straightedges, 10 to 12 feet in length. Depressions shall be filled with freshly mixed concrete, struck off, consolidated, and refinished. Projections above the required elevation shall also be struck off and refinished. Long-handled, flat "bull floats" shall be used sparingly and only as necessary to correct minor, scattered surface defects. Finishing with hand floats and trowels shall be held to the absolute minimum necessary. Joints and edges shall not be overfinished.

3.5.3 Hand Finishing

Hand finishing operations shall be used only for those unusual slabs as specified previously. Grate tampers (jitterbugs) shall not be used. As soon as placed and vibrated, the concrete shall be struck off and screeded. The surface shall be tamped with a strike-off and tamping screed, or vibratory screed. Immediately following the final tamping of the surface, the pavement shall be floated longitudinally. Long-handled, flat bull floats shall be used sparingly and only as necessary to correct surface defects. Finishing with hand floats and trowels shall be held to the absolute minimum necessary. Joints and edges shall not be overfinished. No water shall be added to the pavement during finishing operations.

3.5.4 Texturing

Before the surface sheen has disappeared and before the concrete hardens, the surface of the pavement shall be given a texture as described herein. After curing is complete, all textured surfaces shall be thoroughly power broomed to remove all debris. The concrete in areas of recesses for tie-down anchors, lighting fixtures, and other outlets in the pavement shall be finished to provide a surface of the same texture as the surrounding area.

3.5.4.1 Fabric-Drag Surface Finish

Surface texture shall be applied by dragging the surface of the pavement, in the direction of the concrete placement, with a moist fabric drag. The dragging shall produce a uniform finished surface having a fine sandy texture without disfiguring marks.

3.5.5 Edging

After texturing has been completed, the edge of the slabs along the forms shall be carefully finished with an edging tool to form a smooth rounded surface of 1/8 inch radius. No water shall be added to the surface during edging. Every effort shall be made to prevent bringing excess paste to the surface.

3.6 CURING

Concrete shall be continuously protected against loss of moisture and rapid temperature changes for at least 7 days from the completion of finishing operations. Unhardened concrete shall be protected from rain and flowing water. During hot weather with low humidity and/or wind, the Contractor shall institute measures to prevent plastic shrinkage cracks from developing. ACI 305R contains means of predicting plastic shrinkage cracking and preventative measures. Plastic shrinkage cracks that occur shall be filled by injection of epoxy resin after the concrete hardens.

Plastic shrinkage cracks shall never be troweled over or filled with slurry. Curing shall be accomplished by one of the following methods.

3.6.1 Membrane Curing

A uniform coating of white-pigmented membrane-forming curing compound shall be applied to the entire exposed surface of the concrete including pavement edges as soon as the free water has disappeared from the surface after finishing. If evaporation is high and no moisture is present on the surface even though bleeding has not stopped, fog sprays shall be used to keep the surface moist until setting of the cement occurs. Curing compound shall then be immediately applied. Curing compound shall be applied to the finished surfaces by means of a self-propelled automatic spraying machine, equipped with multiple spraying nozzles with wind shields, spaning the newly paved lane. The curing compound shall be applied at a maximum application rate of 200 square feet per gallon. The application of curing compound by hand-operated, mechanical powered pressure sprayers will be permitted only on odd widths or shapes of slabs where indicated and on concrete surfaces exposed by the removal of forms. The compound shall form a uniform, continuous, cohesive film that will not check, crack, or peel and that will be free from pinholes and other discontinuities. Areas where the curing compound develops the above defects or is damaged by heavy rainfall, sawing or other construction operations within the curing period, shall be immediately resprayed.

3.6.2 Moist Curing

Concrete to be moist-cured shall be maintained continuously wet for the entire curing period, commencing immediately after finishing. Surfaces shall be cured by ponding, by continuous sprinkling, by continuously saturated burlap or cotton mats, or by continuously saturated plastic coated burlap. Impervious sheet curing shall not be used.

3.7 JOINTS

No deviation from the jointing pattern shown on the drawings shall be made without written approval of the Design District Pavement or Geotechnical Engineer. All joints shall be straight, perpendicular to the finished grade of the pavement, and continuous from edge to edge or end to end of the pavement with no abrupt offset and no gradual deviation greater than 1/2 inch.

3.7.1 Longitudinal Construction Joints

Dowels are not allowed in longitudinal construction joints, unless otherwise directed to do so by the Contracting officer. Edges shall be thickened.

3.7.2 Transverse Construction Joints

Transverse construction joints shall be installed at a planned transverse joint, at the end of each day's placing operations and when concrete placement is interrupted. Transverse construction joints shall be constructed either by utilizing headers and hand placement and finishing techniques, or by placing concrete beyond the transverse construction joint location and then saw cutting full depth and removing concrete back to the transverse construction joint location. For the latter case, dowels shall be installed using methods for dowels installed in hardened concrete described above. All transverse construction joints shall be dowelled.

3.7.3 Expansion Joints

Expansion joints shall be formed where indicated, and about any structures and features that project through or into the pavement, using preformed joint filler of the type, thickness, and width indicated, and shall extend the full slab depth. Edges of the concrete at the joint face shall be edged. The joint filler strips shall be installed to form a recess at the pavement surface to be filled with joint sealant. Expansion joints shall be constructed with thickened edges for load transfer.

3.7.4 Slip Joints

Slip joints shall be installed the full depth of the slab using expansion joint preformed joint filler material attached to the face of the original concrete placement. A reservoir for joint sealant shall be constructed at the top of the joint. Edges of the joint face shall be edged.

3.7.5 Contraction Joints

Transverse and longitudinal contraction joints shall be of the weakened-plane or dummy type. Longitudinal contraction joints shall be constructed by sawing a groove in the hardened concrete with a power-driven saw. Transverse contraction joints shall be constructed in conformance with requirements for sawed joints.

3.7.5.1 Sawed Joints

Sawed contraction joints shall be constructed by sawing a groove in the concrete with a 1/8 inch blade to the indicated depth. The time of initial sawing shall vary depending on existing and anticipated weather conditions and shall be such as to prevent uncontrolled cracking of the pavement. Sawing of the joints shall commence as soon as the concrete has hardened sufficiently to permit cutting the concrete without chipping, spalling, or tearing. The joints shall be sawed at the required spacing consecutively in the sequence of the concrete placement. Sawing at a given joint location shall be discontinued when a crack develops ahead of the saw cut. Immediately after the joint is sawed, the saw cut and adjacent concrete surface shall be thoroughly flushed with water until all waste from sawing is removed from the joint. The surface shall be resprayed with curing compound as soon as free water disappears. The top of the joint opening and the joint groove at exposed edges shall be tightly sealed with cord or backer rod before the concrete in the region of the joint is resprayed with curing compound.

3.7.6 Thickened Edge Joints

Underlying material in the transition area shall meet the requirements for smoothness and compaction specified for all other areas of the underlying material.

3.8 REPAIR, REMOVAL, AND REPLACEMENT OF SLABS

New pavement slabs that contain full-depth cracks shall be removed and replaced, as specified herein at no cost to the Government. Removal and replacement shall be full depth, shall be full width of the paving lane, and the limit of removal shall be from each original transverse joint . The Contracting Officer will determine whether cracks extend full depth of the pavement and may require minimum 6 inch diameter cores to be drilled

on the crack to determine depth of cracking. Cores shall be drilled and the hole later filled by the Contractor with a well consolidated concrete mixture bonded to the walls of the hole with epoxy resin. Drilling of cores and refilling holes shall be at no expense to the Government. Cracks that do not extend full depth of slab shall be cleaned and then pressure injected with epoxy resin, Type IV, Grade 1. The Contractor shall ensure that the crack is not widened during epoxy resin injection. Where a full depth crack intersects the original transverse joint, the slab(s) containing the crack shall be removed and replaced, with dowels installed, as required below. Spalls along joints shall be repaired as specified.

3.8.1 Removal and Replacement of Full Slabs

Unless there are keys or dowels present, all edges of the slab shall be sawcut full depth. If dowels, or tie bars are present along any edges, these edges shall be sawed full depth 6 inches from the edge just beyond the end of dowels or tie bars if they are present. These joints shall then be carefully sawed on the joint line to within 1 inch of the depth of the dowel. The main slab shall be further divided by sawing full depth, at appropriate locations, and each piece lifted out and removed. The narrow strips along keyed or doweled edges shall be carefully broken up and removed. Care shall be taken to prevent damage to the dowels, tie bars, or keys or to concrete to remain in place. Protruding portions of dowels shall be painted and lightly oiled. The joint face below dowels shall be suitably trimmed so that there is no abrupt offset. If underbreak occurs at any point along any edge, the area shall be hand-filled with concrete, producing an even joint face from top to bottom, before replacing the removed slab. If underbreak over 4 inches deep occurs, the entire slab containing the underbreak shall be removed and replaced. Where there are no dowels, tie bars, on an edge, or where they have been damaged, dowels of the size and spacing as specified for other joints in similar pavement shall be installed by epoxy grouting them into holes drilled into the existing concrete. Original damaged dowels or tie bars shall be cut off flush with the joint face. All four edges of the new slab shall thus contain dowels or original tie bars. Prior to placement of new concrete, the underlying material shall be graded and recompacted, and the surfaces of all four joint faces shall be cleaned of all loose material and contaminants, and coated with a double application of membrane forming curing compound as bond breaker. Placement of concrete shall be as specified for original construction. The resulting joints around the new slab shall be prepared and sealed as specified.

3.8.2 Repairing Spalls Along Joints

Spalls along joints and cracks shall be repaired by first making a vertical saw cut at least 1 inch outside the spalled area and to a depth of at least 2 inches. Saw cuts shall be straight lines forming rectangular areas. The concrete between the saw cut and the joint, or crack, shall be chipped out to remove all unsound concrete. The cavity shall be thoroughly cleaned with high pressure water jets supplemented with compressed air to remove all loose material. Immediately before filling the cavity, a prime coat shall be applied to the dry cleaned surface of all sides and bottom of the cavity, except any joint face. The prime coat shall be applied in a thin coating and scrubbed into the surface with a stiff-bristle brush. Prime coat for portland cement repairs shall be a neat cement grout and for epoxy resin repairs shall be epoxy resin, Type III, Grade 1. The cavity shall be filled with low slump portland cement concrete or mortar, or with epoxy resin concrete or mortar. Portland cement concrete shall be used for larger spalls, those more than 1/3 cu. ft. in size after removal

operations; portland cement mortar shall be used for spalls between 0.03 and 1/3 cu. ft; and epoxy resin mortar or Type III, Grade 3 epoxy resin for those spalls less than 0.03 cu. ft. in size after removal operations. Portland cement concretes and mortars shall be very low slump mixtures, proportioned, mixed, placed, tamped, and cured. If the materials and procedures are approved in writing, latex modified concrete mixtures may be used for repairing spalls less than 1/3 cu.ft. in size. Epoxy resin mortars shall be made with Type III, Grade 1, epoxy resin, using proportions, mixing, placing, tamping and curing procedures as recommended by the manufacturer. Any repair material on the surrounding surfaces of the existing concrete shall be removed before it hardens. Where the spalled area abuts a joint, an insert or other bond-breaking medium shall be used to prevent bond at the joint face. A reservoir for the joint sealant shall be sawed to the dimensions required for other joints. In lieu of sawing, spalls not adjacent to joints, and popouts, both less than 6 inches in maximum dimension, may be prepared by drilling a core 2 inches in diameter greater than the size of the defect, centered over the defect, and 2 inches deep or 1/2 inch into sound concrete, whichever is greater. The core hole shall be repaired as specified above for other spalls.

3.8.3 Areas Defective in Plan Grade or Smoothness

In areas not meeting the specified limits for surface smoothness and plan grade, high areas shall be reduced to attain the required smoothness and grade, except as depth is limited below. High areas shall be reduced by grinding the hardened concrete with a surface grinding machine after the concrete is 14 days or more old. The depth of grinding shall not exceed 1/4 inch. All pavement areas requiring plan grade or surface smoothness corrections in excess of the specified limits, shall be removed and replaced. In pavement areas given a wire comb or tined texture, areas exceeding 25 square feet that have been corrected by rubbing or grinding shall be retextured by grooving machine sawn grooves meeting the requirements for the wire comb or tined texture. All areas in which grinding has been performed will be subject to the thickness tolerances specified in paragraph Thickness. Any grinding performed on individual slabs with excessive deficiencies shall be performed at the Contractor's own decision without entitlement to additional compensation if eventual removal of the slab is required.

3.9 EXISTING CONCRETE PAVEMENT REMOVAL AND REPAIR

Existing concrete pavement shall be removed as indicated and as specified in Section 02050 DEMOLITION modified, and expanded as specified herein. Removal, repair and replacement shall be made as indicated and as specified in paragraph REPAIR, REMOVAL, AND REPLACEMENT OR SLABS.

3.10 PAVEMENT PROTECTION

The Contractor shall protect the pavement against all damage prior to final acceptance of the work. Traffic shall be excluded from the new pavement. As a construction expedient in paving intermediate lanes between newly paved pilot lanes, operation of the hauling equipment will be permitted on the new pavement after the pavement has been cured for 7 days and the joints have been sealed or otherwise protected. All new and existing pavement carrying construction traffic or equipment shall be continuously kept completely clean. Special cleaning and care shall be used where Contractor's traffic uses or crosses active airfield pavement.

3.11 TESTING AND INSPECTION FOR CONTRACTOR QUALITY CONTROL (CQC)

Paragraph ACCEPTABILITY OF WORK contains additional CQC requirements. The Contractor shall perform the inspection and tests described below and, based upon the results of these inspections and tests, shall take the action required and submit reports as specified. When, in the opinion of the Contracting Officer, the paving operation is out of control, concrete placement shall cease.

3.11.1 Batch Plant Control

A daily report shall be prepared indicating checks made for scale accuracy with test weights, checks of batching accuracy, and corrective action taken prior to and during placement for weighing or batching, type and source of cement used, type and source of pozzolan, amount and source of admixtures used, aggregate source, the required aggregate and water masses per cubic yd, amount of water as free moisture, aggregate gradation in each size of aggregate, and the batch aggregate and water masses per cubic yd. for each class of concrete batched during each day's plant operation.

3.11.2 Concrete Mixture

a. Air Content Testing. Air content tests shall be made on randomly selected batches of concrete for each 250 cubic yards, or fraction thereof, of concrete placed during each 8-hour shift. Whenever air content reaches specified limits, an immediate confirmatory test shall be made. If the second test also shows air content at or exceeding specified limits, an adjustment shall immediately be made in the amount of air-entraining admixture batched to bring air content within specified limits. If the next adjusted batch of concrete is not within specified limits, concrete placement shall be halted until concrete air content is within specified limits.

b. Slump Testing. Slump tests tests shall be made on randomly selected batches of concrete for each 250 cubic yards, or fraction thereof, of concrete placed during each 8-hour shift. Additional tests shall be made when excessive variation in workability is reported by the placing foreman or Government inspector. Whenever slump approaches the maximum limit, an adjustment shall immediately be made in the batch masses of water and fine aggregate, without exceeding the maximum w/(c+p). When a slump result exceeds the specification limit, no further concrete shall be delivered to the paving site until adjustments have been made and slump is again within the limit.

c. Temperature. The temperature of the concrete shall be measured every 250 cubic yards, or fraction thereof, of concrete placed during an 8-hour shift.

d. Concrete Strength Testing. Four (4) cylinders from the same batch shall be fabricated, cured and tested for compressive strength, testing two cylinders at 7-day, and two cylinders at 28-day age. The four cylinders shall be made for each 500 cubic yards or fraction thereof, of concrete placed during an 8-hour shift. Control charts for strength, showing the 7-day and 28-day CQC compressive strengths, and the 28-day required compressive strength, shall be maintained and submitted with the weekly CQC Reports.

3.11.3 Inspection Before Placing

Underlying materials, joint locations and types, construction joint faces, forms, reinforcing, dowels, and embedded items shall be inspected by a Registered Engineer in sufficient time prior to each paving operation in order to certify to the Contracting Officer that they are ready to receive concrete. The results of each inspection shall be reported in writing, and the certification signed by the Registered Engineer, prior to each days' paving.

3.11.4 Paving Operations

The placing foreman shall supervise all placing and paving operations, shall determine that the correct quality of concrete is placed in each location as shown, shall insure that the concrete is consolidated full depth and that finishing is performed as specified. The placing foreman shall be responsible for measuring and recording concrete temperatures and ambient temperature hourly during placing operations, weather conditions, time of placement, volume of concrete placed, and method of paving and any problems encountered.

3.11.5 Curing Inspection

a. Moist Curing Inspections. Each day on both work and non-work days, an inspection shall be made of all areas subject to moist curing. The surface moisture condition shall be noted and recorded. When any inspection finds an area of inadequate curing, immediate corrective action shall be taken, and the required curing period for the area shall be extended by 1 day.

b. Membrane Curing Inspection. At the end of each day's placement, the CQC Representative shall determine the quantity of compound used by measurement of the container; shall determine the area of concrete surface covered; shall then compute the rate of coverage in square feet per gallon and shall also note whether or not coverage is uniform. When the coverage rate of the curing compound is less than that specified or when the coverage is not uniform, the entire surface shall be sprayed again.

3.11.6 Cold-Weather Protection

At least once per day, an inspection shall be made of all areas subject to cold-weather protection. Any deficiencies shall be noted, corrected, and reported.

3.11.7 Reports

All results of tests or inspections conducted shall be reported informally as they are completed and in writing daily. A weekly report, signed by a registered engineer, shall be prepared for the updating of control charts and test data, and all CQC inspections and actions covering the entire period from the start of the construction through the current week. Reports of failures and the action taken shall be confirmed in writing in the routine reports. The Contracting Officer has the right to examine all CQC records. A copy of weekly reports shall be faxed to the Design District Pavement or Geotechnical Engineer. At the completion of concrete placement, a certification report shall be prepared containing mix designs, all updated control charts and concrete test data, quality control reports, smoothness reports, and other pertinent data on the concrete, with a

certification by a registered engineer that the concrete placed meets all specification requirements. A copy of the certification report shall be mailed to the Design District pavement or Geotechnical Engineer.

3.12 CONSTRUCTION QUALITY CONTROL

Attention is directed to the applicable sections which requires the Contractor to perform quality control inspection, testing, and reporting.

-- End of Section --

SECTION TABLE OF CONTENTS

DIVISION 02 - SITE WORK

SECTION 02760

FIELD MOLDED SEALANTS FOR SEALING JOINTS IN RIGID PAVEMENTS

PART 1 GENERAL

1.1 REFERENCES
1.2 UNIT PRICES
1.2.1 Measurement
1.2.2 Payment
1.3 SUBMITTALS
1.4 SAFETY
1.5 TEST REQUIREMENTS
1.6 EQUIPMENT
1.6.1 Joint Cleaning Equipment
1.6.1.1 Tractor-Mounted Routing Tool
1.6.1.2 Concrete Saw
1.6.1.3 Sandblasting Equipment
1.6.1.4 Waterblasting Equipment
1.6.1.5 Hand Tools
1.6.2 Sealing Equipment
1.6.2.1 Hot-Poured Sealing Equipment
1.6.2.2 Two-Component, Cold-Applied, Machine Mix Sealing Equipment
1.6.2.3 Two-Component, Cold-Applied, Hand-Mix Sealing Equipment
1.6.2.4 Cold-Applied, Single-Component Sealing Equipment
1.7 TRIAL JOINT SEALANT INSTALLATION
1.8 DELIVERY AND STORAGE
1.9 ENVIRONMENTAL CONDITIONS

PART 2 PRODUCTS

2.1 SEALANTS
2.2 PRIMERS
2.3 BACKUP MATERIALS
2.4 BOND BREAKING TAPES

PART 3 EXECUTION

3.1 PREPARATION OF JOINTS
3.1.1 Existing Sealant Removal
3.1.2 Sawing
3.1.2.1 Refacing of Joints
3.1.2.2 Refacing of Random Cracks
3.1.3 Sandblasting
3.1.4 Back-Up Material
3.1.5 Bond Breaking Tape
3.1.6 Rate of Progress of Joint Preparation
3.2 PREPARATION OF SEALANT
3.2.1 Hot-Poured Sealants
3.2.2 Type M Sealants

3.2.3 Type H Sealants
3.2.4 Single-Component, Cold-Applied Sealants
3.3 INSTALLATION OF SEALANT
3.3.1 Time of Application
3.3.2 Sealing Joints
3.4 INSPECTION
3.4.1 Joint Cleaning
3.4.2 Joint Sealant Application Equipment
3.4.3 Joint Sealant
3.5 CLEAN-UP
3.6 CONSTRUCTION QUALITY CONTROL

-- End of Section Table of Contents --

SECTION 02760

FIELD MOLDED SEALANTS FOR SEALING JOINTS IN RIGID PAVEMENTS

PART 1 GENERAL

1.1 REFERENCES

The publications listed below form a part of this specification to the extent referenced. The publications are referred to in this text by the basic designation only.

AMERICAN SOCIETY FOR TESTING AND MATERIALS (ASTM)

ASTM C 509	(1994) Elastomeric Cellular Preformed Gasket and Sealing Material
ASTM D 789	(1994) Determination of Relative Viscosity, Melting Point, and Moisture Content of Polyamide (PA)
ASTM D 3405	(1994) Joint Sealants, Hot-Applied, for Concrete and Asphalt Pavements
ASTM D 3569	(1985; R 1991) Joint Sealant, Hot-Applied, Elastomeric, Jet-Fuel-Resistant-Type for Portland Cement Concrete Pavements
ASTM D 5893	(1996) Cold Applied, Single Component Chemically Curing Silicon Joint Sealant for Portland Cement Concrete Pavement

CORPS OF ENGINEERS (COE)

COE CRD-C 525	(1989) Corps of Engineers Test Method for Evaluation of Hot-Applied Joint Sealants for Bubbling Due to Heating

FEDERAL SPECIFICATIONS (FS)

FS SS-S-200	(Rev E; Am 2) Sealants, Joint, Two-Component, Jet-Blast-Resistant, Cold-Applied, for Portland Cement Concrete Pavement

1.2 UNIT PRICES

1.2.1 Measurement

The quantity of each sealing item to be paid for shall be determined by actual measurement of the number of linear feet of in-place material that has been approved by the Contracting Officer.

1.2.2 Payment

Payment shall be made at the contract unit bid prices of the particular option year Line Items; __030A, "Silicone"; _030B, "Jet Fuel Resistant"; and _032 "Rout and Seal Cracks" of the Pricing Schedule, for the sealing items scheduled. The unit bid prices shall include the cost of all labor, materials, and the use of all equipment and tools required to complete the work.

1.3 SUBMITTALS

Government approval is required for submittals with a "GA" designation; submittals having an "FIO" designation are for information only. The following shall be submitted in accordance with Section 01330 SUBMITTAL PROCEDURES:

SD-06 Instructions

Manufacturer's Recommendations; GA.

Where installation procedures, or any part thereof, are required to be in accordance with the manufacturer's recommendations, printed copies of these recommendations, 14 days prior to use on the project. Installation of the material will not be allowed until the recommendations are received. Failure to furnish these recommendations can be cause for rejection of the material.

SD-07 Schedules

Construction Equipment List; FIO.

List of proposed equipment to be used in performance of construction work including descriptive data, 14 days prior to use on the project.

SD-14 Samples

Materials; GA.

Samples of the materials (sealant, primer if required, and backup material), in sufficient quantity for testing and approval 14 days prior to the beginning of work. No material will be allowed to be used until it has been approved.

1.4 SAFETY

Joint sealant shall not be placed within 25 feet of any liquid oxygen (LOX) equipment, LOX storage, or LOX piping. Joints in this area shall be thoroughly cleaned and left unsealed.

1.5 TEST REQUIREMENTS

The joint sealant and backup or separating material shall be tested for conformance with the referenced applicable material specification. Testing of the materials shall be performed in an approved independent laboratory and certified copies of the test reports shall be submitted and approved 14 days prior to the use of the materials at the job site. Samples will be retained by the Government for possible future testing should the materials appear defective during or after application. Conformance with the requirements of the laboratory tests specified will not constitute final acceptance of the materials. Final acceptance will be based on the performance of the in-place materials.

1.6 EQUIPMENT

Machines, tools, and equipment used in the performance of the work required by this section shall be approved before the work is started and shall be maintained in satisfactory condition at all times.

1.6.1 Joint Cleaning Equipment

1.6.1.1 Tractor-Mounted Routing Tool

The routing tool used for removing old sealant from the joints shall be of such shape and dimensions and so mounted on the tractor that it will not damage the sides of the joints. The tool shall be designed so that it can be adjusted to remove the old material to varying depths as required. The use of V-shaped tools or rotary impact routing devices will not be permitted. Hand-operated spindle routing devices may be used to clean and enlarge random cracks.

1.6.1.2 Concrete Saw

A self-propelled power saw with water-cooled diamond or abrasive saw blades will be provided for cutting joints to the depths and widths specified or for refacing joints or cleaning sawed joints where sandblasting does not provide a clean joint.

1.6.1.3 Sandblasting Equipment

Sandblasting equipment shall include an air compressor, hose, and long-wearing venturi-type nozzle of proper size, shape and opening. The maximum nozzle opening should not exceed 1/4 inch. The air compressor shall be portable and shall be capable of furnishing not less than 150 cubic feet per minute and maintaining a line pressure of not less than 90 psi at the nozzle while in use. Compressor capability under job conditions must be demonstrated before approval. The compressor shall be equipped with traps that will maintain the compressed air free of oil and water. The nozzle shall have an adjustable guide that will hold the nozzle aligned with the joint approximately 1 inch above the pavement surface. The height, angle of inclination and the size of the nozzle shall be adjusted as necessary to secure satisfactory results.

1.6.1.4 Waterblasting Equipment

Waterblasting equipment shall include a trailer-mounted water tank, pumps, high-pressure hose, wand with safety release cutoff control, nozzle, and auxiliary water resupply equipment. The water tank and auxiliary resupply equipment shall be of sufficient capacity to permit continuous operations. The nozzle shall have an adjustable guide that will hold the nozzle aligned with the joint approximately 1 inch above the pavement surface. The height, angle of inclination and the size of the nozzle shall be adjustable as necessary to obtain satisfactory results. A pressure gauge mounted at the pump shall show at all times the pressure in pounds per square inch at which the equipment is operating.

1.6.1.5 Hand Tools

Hand tools may be used, when approved, for removing defective sealant from a crack and repairing or cleaning the crack faces.

1.6.2 Sealing Equipment

1.6.2.1 Hot-Poured Sealing Equipment

The unit applicators used for heating and installing ASTM D 3405 or ASTM D 3569 joint sealant materials shall be mobile and shall be equipped with a double-boiler, agitator-type kettle with an oil medium in the outer space for heat transfer; a direct-connected pressure-type extruding device with a nozzle shaped for inserting in the joint to be filled; positive temperature devices for controlling the temperature of the transfer oil and sealant; and a recording type thermometer for indicating the temperature of the sealant. The applicator unit shall be designed so that the sealant will circulate through the delivery hose and return to the inner kettle when not in use.

1.6.2.2 Two-Component, Cold-Applied, Machine Mix Sealing Equipment

The equipment used for proportioning, mixing, and installing FS SS-S-200 Type M joint sealants shall be designed to deliver two semifluid components through hoses to a portable mixer at a preset ratio of 1 to 1 by volume using pumps with an accuracy of plus or minus 5 percent for the quantity of each component. The reservoir for each component shall be equipped with mechanical agitation devices that will maintain the components in a uniform condition without entrapping air. Provisions shall be incorporated to permit thermostatically controlled indirect heating of the components, when required. However, immediately prior to proportioning and mixing, the temperature of either component shall not exceed 90 degrees F. Screens shall be provided near the top of each reservoir to remove any foreign particles or partially polymerized material that could clog fluid lines or otherwise cause misproportioning or improper mixing of the two components. The equipment shall be capable of thoroughly mixing the two components through a range of application rates of 10 to 60 gallons per hour and through a range of application pressures from 50 to 1500 psi as required by material, climatic, or operating conditions. The mixer shall be designed for the easy removal of the supply lines for cleaning and proportioning of the components. The mixing head shall accommodate nozzles of different types and sizes as may be required by various operations. The dimensions of the nozzle shall be such that the nozzle tip will extend into the joint to allow sealing from the bottom of the joint to the top. The initially approved equipment shall be maintained in good working condition, serviced in accordance with the supplier's instructions, and shall not be altered in any way without obtaining prior approval.

1.6.2.3 Two-Component, Cold-Applied, Hand-Mix Sealing Equipment

Mixing equipment for FS SS-S-200 Type H sealants shall consist of a slow-speed electric drill or air-driven mixer with a stirrer in accordance with the manufacturer's recommendations.

1.6.2.4 Cold-Applied, Single-Component Sealing Equipment

The equipment for installing ASTM D 5893 single component joint sealants shall consist of an extrusion pump, air compressor, following plate, hoses, and nozzle for transferring the sealant from the storage container into the joint opening. The dimension of the nozzle shall be such that the tip of the nozzle will extend into the joint to allow sealing from the bottom of the joint to the top. The initially approved equipment shall be maintained in good working condition, serviced in accordance with the supplier's instructions, and shall not be altered in any way without obtaining prior

approval. Small hand-held air-powered equipment (i.e., caulking guns) may be used for small applications.

1.7 TRIAL JOINT SEALANT INSTALLATION

Prior to the cleaning and sealing of the joints for the entire project, a test section of at least 200 feet long shall be prepared using the specified materials and approved equipment, so as to demonstrate the proposed joint preparation and sealing of all types of joints in the project. Following the completion of the test section and before any other joint is sealed, the test section shall be inspected to determine that the materials and installation meet the requirements specified. If it is determined that the materials or installation do not meet the requirements, the materials shall be removed, and the joints shall be recleaned and resealed at no cost to the Government. When the test section meets the requirements, it may be incorporated into the permanent work and paid for at the contract unit price per linear foot for sealing items scheduled. All other joints shall be prepared and sealed in the manner approved for sealing the test section.

1.8 DELIVERY AND STORAGE

Materials delivered to the job site shall be inspected for defects, unloaded, and stored with a minimum of handling to avoid damage. Storage facilities shall be provided by the Contractor at the job site for maintaining materials at the temperatures and conditions recommended by the manufacturer.

1.9 ENVIRONMENTAL CONDITIONS

The ambient air temperature and the pavement temperature within the joint wall shall be a minimum of 50 degrees F and rising at the time of application of the materials. Sealant shall not be applied if moisture is observed in the joint.

PART 2 PRODUCTS

2.1 SEALANTS

Materials for sealing cracks in the various paved areas indicated on the drawings shall be as follows:

Area	Sealing Material
Joint between new AC and PCC Paving	ASTM D 3405 and COE CRD-C 525
Joint in the area subject to Jet-Fuel-Resistant	ASTM D 3569 and COE CRD-C 525
Joint in the area subject to Jet-Blast_Resistant	FS SS-S-200 Type M FS SS-S-200 Type H
Joint in any area	ASTM D 5893

2.2 PRIMERS

Primers, when their use is recommended by the manufacturer of the sealant, shall be as recommended by the manufacturer of the sealant.

2.3 BACKUP MATERIALS

The backup material shall be a compressible, nonshrinking, nonstaining, nonabsorbing material and shall be nonreactive with the joint sealant. The material shall have a melting point at least 5 degrees F greater than the pouring temperature of the sealant being used when tested in accordance with ASTM D 789. The material shall have a water absorption of not more than 5 percent of the sample weight when tested in accordance with ASTM C 509. The backup material shall be 25 plus or minus 5 percent larger in diameter than the nominal width of the crack.

2.4 BOND BREAKING TAPES

The bond breaking tape or separating material shall be a flexible, nonshrinkable, nonabsorbing, nonstaining, and nonreacting adhesive-backed tape. The material shall have a melting point at least 5 degrees F greater than the pouring temperature of the sealant being used when tested in accordance with ASTM D 789. The bond breaker tape shall be approximately 1/8 inch wider than the nominal width of the joint and shall not bond to the joint sealant.

PART 3 EXECUTION

3.1 PREPARATION OF JOINTS

Immediately before the installation of the sealant, the joints shall be thoroughly cleaned to remove all laitance, curing compound, filler, protrusions of hardened concrete, and old sealant from the sides and upper edges of the joint space to be sealed.

3.1.1 Existing Sealant Removal

The in-place sealant shall be cut loose from both joint faces and to the depth shown on the drawings, using the tractor-mounted routing equipment as specified in paragraph EQUIPMENT. Depth shall be sufficient to accommodate any separating or backup material that is required to maintain the depth of new sealant to be installed. Prior to further cleaning operations, all loose old sealant remaining in the joint opening shall be removed by blowing with compressed air. Hand tools may be required to remove sealant from random cracks. Chipping, spalling, or otherwise damaging the concrete will not be allowed.

3.1.2 Sawing

3.1.2.1 Refacing of Joints

Refacing of joints shall be accomplished using a concrete saw as specified in paragraph EQUIPMENT to remove all residual old sealant and a minimum of concrete from the joint face to provide exposure of newly cleaned concrete, and, if required, to enlarge the joint opening to the width and depth shown on the drawings. The blade shall be stiffened with a sufficient number of suitable dummy (used) blades or washers. Immediately following the sawing operation, the joint opening shall be thoroughly cleaned using a water jet to remove all saw cuttings and debris.

3.1.2.2 Refacing of Random Cracks

Sawing of the cracks shall be accomplished using a power-driven concrete saw as specified in paragraph EQUIPMENT. The saw blade shall be 6 inches or less in diameter to enable the saw to follow the trace of the crack. The blade shall be stiffened as necessary with suitable dummy (or used) blades or washers. Immediately following the sawing operation, the crack opening shall be thoroughly cleaned using a water jet to remove all saw cuttings and debris.

3.1.3 Sandblasting

The newly exposed concrete joint faces and the pavement surfaces extending a minimum of 1/2 inch from the joint edges shall be sandblasted clean. A multiple-pass technique shall be used until the surfaces are free of dust, dirt, curing compound, filler, old sealant residue, or any foreign debris that might prevent the bonding of the sealant to the concrete. After final cleaning and immediately prior to sealing, the joints shall be blown out with compressed air and left completely free of debris and water.

3.1.4 Back-Up Material

When the joint opening is of a greater depth than indicated for the sealant depth, the lower portion of the joint opening shall be plugged or sealed off using a back-up material to prevent the entrance of the sealant below the specified depth. Care shall be taken to ensure that the backup material is placed at the specified depth and is not stretched or twisted during installation.

3.1.5 Bond Breaking Tape

Where inserts or filler materials contain bitumen, or the depth of the joint opening does not allow for the use of a backup material, a bond breaker separating tape will be inserted to prevent incompatibility with the filler materials and three-sided adhesion of the sealant. The tape shall be securely bonded to the bottom of the joint opening so it will not float up into the new sealant.

3.1.6 Rate of Progress of Joint Preparation

The stages of joint preparation which include sandblasting, air pressure cleaning and placing of the back-up material shall be limited to only that lineal footage that can be sealed during the same day.

3.2 PREPARATION OF SEALANT

3.2.1 Hot-Poured Sealants

Sealants conforming to ASTM D 3405 or ASTM D 3569 shall not be heated in excess of the safe heating temperature recommended by the manufacturer as shown on the sealant containers. Sealant that has been overheated or subjected to application temperatures for over 4 hours or that has remained in the applicator at the end of the day's operation shall be withdrawn and wasted.

3.2.2 Type M Sealants

The FS SS-S-200 Type M sealant components and containers shall be inspected prior to use. Any materials that contain water, hard caking of any separated constituents, nonreversible jell, or materials that are otherwise

unsatisfactory shall be rejected. Settlement of constituents in a soft mass that can be readily and uniformly remixed in the field with simple tools shall not be cause for rejection. Prior to transfer of the components from the shipping containers to the appropriate reservoir of the application equipment, the materials shall be thoroughly mixed to ensure homogeneity of the components and incorporation of all constituents at the time of transfer. When necessary for remixing prior to transfer to the application equipment reservoirs, the components shall be warmed to a temperature not to exceed 90 degrees F by placing the components in heated storage or by other approved methods but in no case shall the components be heated by direct flame, or in a single walled kettle, or a kettle without an oil bath.

3.2.3 Type H Sealants

The FS SS-S-200 Type H sealant components shall be mixed either in the container furnished by the manufacturer or a cylindrical metal container of volume approximately 50 percent greater than the package volume. The base material shall be thoroughly mixed in accordance with the manufacturer's instructions. The cure component shall then be slowly added during continued mixing until a uniform consistency is obtained.

3.2.4 Single-Component, Cold-Applied Sealants

The ASTM D 5893 sealant and containers shall be inspected prior to use. Any materials that contain water, hard caking of any separated constituents, nonreversible jell, or materials that are otherwise unsatisfactory shall be rejected. Settlement of constituents in a soft mass that can be readily and uniformly remixed in the field with simple tools will not be cause for rejection.

3.3 INSTALLATION OF SEALANT

3.3.1 Time of Application

Joints shall be sealed immediately following final cleaning of the joint walls and following the placement of the separating or backup material. Open joints that cannot be sealed under the conditions specified, or when rain interrupts sealing operations shall be recleaned and allowed to dry prior to installing the sealant.

3.3.2 Sealing Joints

Immediately preceding, but not more than 50 feet ahead of the joint sealing operations, a final cleaning with compressed air shall be performed. The joints shall be filled from the bottom up to 1/4 inch plus or minus 1/16 inch below the pavement surface. Excess or spilled sealant shall be removed from the pavement by approved methods and shall be discarded. The sealant shall be installed in such a manner as to prevent the formation of voids and entrapped air. In no case shall gravity methods or pouring pots be used to install the sealant material. Traffic shall not be permitted over newly sealed pavement until authorized by the Contracting Officer. When a primer is recommended by the manufacturer, it shall be applied evenly to the joint faces in accordance with the manufacturer's instructions. Joints shall be checked frequently to ensure that the newly installed sealant is cured to a tack-free condition within the time specified.

3.4 INSPECTION

3.4.1 Joint Cleaning

Joints shall be inspected during the cleaning process to correct improper equipment and cleaning techniques that damage the concrete pavement in any manner. Cleaned joints shall be approved prior to installation of the separating or back-up material and joint sealant.

3.4.2 Joint Sealant Application Equipment

The application equipment shall be inspected to ensure conformance to temperature requirements, proper proportioning and mixing (if two-component sealant) and proper installation. Evidences of bubbling, improper installation, failure to cure or set shall be cause to suspend operations until causes of the deficiencies are determined and corrected.

3.4.3 Joint Sealant

The joint sealant shall be inspected for proper rate of cure and set, bonding to the joint walls, cohesive separation within the sealant, reversion to liquid, entrapped air and voids. Sealants exhibiting any of these deficiencies at any time prior to the final acceptance of the project shall be removed from the joint, wasted, and replaced as specified herein at no additional cost to the Government.

3.5 CLEAN-UP

Upon completion of the project, all unused materials shall be removed from the site and the pavement shall be left in a clean condition.

3.6 CONSTRUCTION QUALITY CONTROL

Attention is directed to the applicable sections which requires the Contractor to perform quality control inspection, testing, and reporting.

-- End of Section --

SECTION TABLE OF CONTENTS

DIVISION 02 - SITE WORK

SECTION 02762

COMPRESSION JOINT SEALS FOR CONCRETE PAVEMENTS

PART 1 GENERAL

1.1 REFERENCES
1.2 MEASUREMENT
1.3 PAYMENT
1.4 SAFETY
1.5 SUBMITTALS
1.6 TEST REQUIREMENTS
1.7 EQUIPMENT
1.7.1 Joint Cleaning Equipment
1.7.1.1 Concrete Saw
1.7.1.2 Sandblasting Equipment
1.7.2 Sealing Equipment
1.8 TRIAL JOINT SEAL AND LUBRICANT/ADHESIVE INSTALLATION
1.9 DELIVERY AND STORAGE
1.10 ENVIRONMENTAL CONDITIONS

PART 2 PRODUCTS

2.1 COMPRESSION SEALS
2.2 LUBRICANT/ADHESIVE

PART 3 EXECUTION

3.1 PREPARATION OF JOINTS
3.1.1 Sawing
3.1.2 Sandblast Cleaning
3.1.3 Rate of Progress
3.2 INSTALLATION OF THE COMPRESSION SEAL
3.2.1 Time of Installation
3.2.2 Sequence of Installation
3.3 SEALING OF JOINTS
3.4 CLEAN-UP
3.5 QUALITY CONTROL PROVISIONS
3.5.1 Application Equipment
3.5.2 Procedures
3.5.2.1 Quality Control Inspection
3.5.2.2 Conformance to Stretching and compression Limitations
3.5.2.3 Pavement Temperature
3.5.3 Product

-- End of Section Table of Contents --

SECTION 02762

COMPRESSION JOINT SEALS FOR CONCRETE PAVEMENTS

PART 1 GENERAL

1.1 REFERENCES

The publications listed below form a part of this specification to the extent referenced. The publications are referred to in this text by basic designation only.

AMERICAN SOCIETY FOR TESTING AND MATERIALS (ASTM)

ASTM D 2628	(1991) Preformed Polychloroprene Elastomeric Joint Seals for Concrete Pavements
ASTM D 2835	(1989; R 1993) Lubricant for Installation of Preformed Compression Seals in Concrete Pavements

CORPS OF ENGINEERS (COE)

COE CRD-C 548	(1988) Jet-Fuel and Heat Resistant Preformed Polychloroprene Elastomeric Joint Seals for Rigid Pavements

1.2 MEASUREMENT

The quantity of each sealing item to be paid for shall be determined by actual measurement of the number of linear feet of in-place material that has been approved by the Contracting Officer.

1.3 PAYMENT

No line items are listed for this work in the Payment Schedule. Payment shall be negotiated to determine a contract unit bid price for preformed sealants, including approved trial joint installation, if this type of sealant is desired. The unit bid prices shall include the cost of all labor, materials, the use of all equipment, and tools required to complete the work.

1.4 SAFETY

Compression joint seals shall not be placed within 25 feet of liquid oxygen (LOX) equipment, LOX storage, or LOX piping.

1.5 SUBMITTALS

Government approval is required for submittals with a "GA" designation; submittals having an "FIO" designation are for information only. The following shall be submitted in accordance with Section 01330 SUBMITTAL PROCEDURES:

SD-01 DATA

Test Results; GA.

Certified copies of test results shall be provided 15 days prior to use of material on the project.

Equipment List; GA.

List of proposed equipment to be used in the performance of construction work, including descriptive data shall be provided 15 days prior to use on the project.

Manufacturer's Instructions; GA.

Where installation procedures are required in accordance with the manufacturer's recommendations, printed copies of manufacturers' instructions, 15 days prior to use on the project.

SD-14, Samples

Compression Seals; GA.

Regardless of testing responsibility, 4-feet long samples of the materials shall be submitted for approval 15 days prior to use on the project. Printed directions from the manufacturer on recommended installation criteria shall be furnished with the samples plus the manufacturer's certification that the selected seal is recommended for the installation on this project.

1.6 TEST REQUIREMENTS

Each lot of compression joint seal and lubricant/adhesive shall be sampled, identified, and tested for conformance with the applicable material specification. A lot of compression seal shall consist of 1 day's production or 20,000 linear feet for each cross section, whichever is less. A lot of lubricant/adhesive shall consist of 1 day's production. Testing of the compression joint seal and lubricant/adhesive material shall be the responsibility of the Contractor and shall be performed in an approved independent laboratory, and certified copies of the test reports shall be submitted for approval 15 days prior to the use of the materials at the jobsite. Samples of each lot of material shall also be submitted and will be retained by the Government for possible future testing should the materials appear defective during or after application. The Contractor shall furnish additional samples of materials, in sufficient quantity to be tested, upon request. Final acceptance will be based on conformance to the specified test requirements and the performance of the in-place materials.

1.7 EQUIPMENT

Machines, tools, and equipment used in the performance of the work required by this section shall be approved before the work is started and shall be maintained in satisfactory condition at all times.

1.7.1 Joint Cleaning Equipment

1.7.1.1 Concrete Saw

A self-propelled power saw with water-cooled diamond saw blades shall be

provided for cutting joints to the depths and widths specified and for removing filler, existing old joint seal, or other material embedded in the joints or adhered to the joint faces.

1.7.1.2 Sandblasting Equipment

Sandblasting equipment shall include an air compressor, hose, and a long-wearing venturi-type nozzle of proper size, shape, and opening. The maximum nozzle opening should not exceed 1/4 inch. The air compressor shall be portable and shall be capable of furnishing not less than 150 cubic feet per minute and maintaining a line pressure of not less than 90 psi at the nozzle while in use. The compressor shall be equipped with traps that will maintain the compressed air free of oil and water. The nozzle shall have an adjustable guide that will hold the nozzle aligned with the joint about 1 inch above the pavement surface and will direct the blast to clean the joint walls. The height, angle of inclination, and the size of the nozzle shall be adjusted as necessary to ensure satisfactory results.

1.7.2 Sealing Equipment

Equipment used to install the compression seal shall place the compression seal to the prescribed depths within the specified tolerances without cutting, nicking, twisting, or otherwise damaging the seal. The equipment shall be capable of placing the seal with not more than two percent longitudinal stretch or compression of the seal during installation. The machine shall be an automatic self-propelled joint seal application equipment and engine powered. The machine shall include a reservoir for the lubricant/adhesive, a device for conveying the lubricant/adhesive in the proper quantities to the sides of the compression seal or the sidewalls of the joints, a reel capable of holding one full spool of compression seal, and a power-driven apparatus for feeding the joint seal through a compression device and inserting the seal into the joint. The equipment shall also include a guide to maintain the proper course along the joint being sealed. The machine shall at all times be operated by an experienced operator.

1.8 TRIAL JOINT SEAL AND LUBRICANT/ADHESIVE INSTALLATION

Prior to the cleaning and sealing of the joints for the entire project, a test section at least 200 feet long shall be prepared at a designated location in the project pavement using the specified materials and the approved equipment, so as to demonstrate the proposed joint preparation and sealing of all types of joints in the project. Following the completion of the trial length and before any other joint is sealed, the trial joints will be inspected by the Government to determine that the materials and installation meet the requirements specified. If materials or installation do not meet requirements, the materials shall be removed, and the joints shall be recleaned and resealed at no cost to the Government. No other joints shall be sealed until the test installation has been approved. If the trial section is approved, it may be incorporated into the permanent work. Other joints shall be sealed in the manner approved for sealing the trial joint.

1.9 DELIVERY AND STORAGE

Materials delivered to the jobsite shall be inspected for defects, unloaded, and stored with a minimum of handling to avoid damage. Storage facilities shall protect materials from weather and shall maintain

materials at temperatures recommended by the manufacturer.

1.10 ENVIRONMENTAL CONDITIONS

The ambient temperature and the pavement temperature within the joint wall shall be at least of 35 degrees F and rising at the time of installation of the materials. Sealant installation will not be allowed if moisture or foreign material is observed in the joint.

PART 2 PRODUCTS

2.1 COMPRESSION SEALS

Compression joint seal materials shall be a vulcanized elastomeric compound using polychloroprene as the only base polymer. The material and manufactured seal shall conform to ASTM D 2628 and COE CRD-C 548 where jet fuel and/or heat blast resistance is required. The joint seal shall be a labyrinth type seal. The uncompressed depth of the face of the compression seal (that is to be bonded to the joint wall) shall be greater than the uncompressed width of the seal, except that for seals 1 inch or greater in width, the depth need be only 1 inch or greater. The actual width of the uncompressed seal shall be 13/16 inch or 1 inch with a tolerance of plus 1/8 inch and minus 1/16 inch.

2.2 LUBRICANT/ADHESIVE

Lubricant/adhesive used for the compression elastomeric joint seal shall be a one-component compound conforming to ASTM D 2835.

PART 3 EXECUTION

3.1 PREPARATION OF JOINTS

Immediately before installation of the compression joint seal, the joints shall be thoroughly cleaned to remove laitance, filler, existing sealer, foreign material and protrusions of hardened concrete from the sides and upper edges of the joint space to be sealed. Cleaning shall be by sandblasting or waterblasting and shall extend along pavement surfaces at least 1/2 inch on either side of the joint. After final cleaning and immediately prior to sealing, the joints shall be blown out with compressed air and left completely free of debris and water. The Contractor shall demonstrate that the selected cleaning operation meets the cleanliness requirements. Any irregularity in the joint face which would prevent uniform contact between the joint seal and the joint face shall be corrected prior to the installation of the joint seal.

3.1.1 Sawing

Joints shall be cleaned and to opened to the specified width and depth by sawing. Immediately following the sawing operation, the joint faces and opening shall be thoroughly cleaned using a water jet to remove saw cuttings or debris remaining on the faces or in the joint opening. Compression seal shall be installed within 3 calendar days of the time the joint cavity is sawed. Depth of the joint cavity will be as recommended by the seal manufacturer. The saw cut for the joint seal cavity shall be centered over the joint line. The nominal width of the sawed joint seal cavity shall be as follows; the actual width shall be within a tolerance of

plus or minus 1/16 inch.

3.1.2 Sandblast Cleaning

A multiple pass sandblasting technique shall be used until the surfaces are free of dust, dirt, curing compound, or any residue that might prevent ready insertion or uniform contact of the seal and bonding of the lubricant/adhesive to the concrete.

3.1.3 Rate of Progress

Sandblasting of joint faces shall be limited to the length of joint that can be sealed during the same workday.

3.2 INSTALLATION OF THE COMPRESSION SEAL

3.2.1 Time of Installation

Joints shall be sealed immediately within 3 calendar days of sawing the joint seal cavity and following concrete cure and the final cleaning of the joint walls. Open joints ready for sealing that cannot be sealed under the specified conditions shall be provided with an approved temporary seal to prevent infiltration of foreign material. When rain or other weather related interrupts the sealing operations, the joints shall be washed, air pressure cleaned, and allowed to dry prior to installing the lubricant/adhesive and compression seal.

3.2.2 Sequence of Installation

Longitudinal joints shall be sealed first, followed by transverse joints. Seals in longitudinal joints shall be installed so that all transverse joint seals will be intact from edge to edge of the pavement. Intersections shall be made monolithic by use of joint seal adhesive and care in fitting the intersection parts together. Extender pieces of seal shall not be used at intersections. Any seal falling short at the intersection shall be removed and replaced with new seal at no additional cost to the Government. Seals that are required to change direction by more than 20 degrees, may require a poured sealant at the intersection. Poured sealant shall be as recommended by the compression seal manufacturer.

3.3 SEALING OF JOINTS

The sides of the joint seal or the sides of the joint shall be covered with a coating of lubricant/adhesive and the seal installed in such a manner as to conform to all requirements specified. Butt joints and seal intersections shall be coated with liberal applications of lubricant/adhesive. Lubricant/adhesive spilled on the pavement shall be removed immediately to prevent setting on the pavement. The in-place joint seal shall be in an upright position and free from twisting, distortion, and cuts. Adjustments shall be made to the installation equipment and procedure, if the stretch or compression exceeds 2 percent. Any seal exceeding 2 percent stretch or compression shall be removed and replaced. The joint seal shall be placed at a uniform depth within the tolerances specified. In-place joint seal which fails to meet the specified requirements shall be removed and replaced with new joint seal at no cost to the Government. The compression joint seal shall be placed to a depth of 1/4 inch, plus or minus 1/8 inch, below the pavement surface except when the joint is beveled or has a radius at the surface, or unless otherwise directed. For beveled joints or joints with a radius at the

surface, the compression joint seal shall be installed at a depth of 1/8 inch, plus or minus 1/8 inch, below the bottom of the edge of the bevel or radius. No part of the seal shall be allowed to project above the surface of the pavement or above the edge of the bevel or radius. The seal shall be installed in the longest practicable lengths in longitudinal joints and shall be cut at the joint intersections to provide continuous installation of the seal in the transverse joints. The lubricant/adhesive in the longitudinal joints shall be allowed to set for 1 hour prior to cutting at the joint intersections to reduce the possibility of shrinkage. For all transverse joints, the minimum length of the compression joint seal shall be the pavement width from edge to edge.

3.4 CLEAN-UP

Upon completion of the project, all unused materials shall be removed from the site, any lubricant/adhesive on the pavement surface shall be removed, and the pavement shall be left in clean condition.

3.5 QUALITY CONTROL PROVISIONS

3.5.1 Application Equipment

The application equipment shall be inspected to assure uniform application of lubricant/adhesive to the sides of the compression joint seal or the walls of the joint. If any equipment causes cutting, twisting, nicking, excessive stretching or compressing of the seal, or improper application of the lubricant/adhesive, the operation will be suspended until causes of the deficiencies are determined and corrected.

3.5.2 Procedures

3.5.2.1 Quality Control Inspection

Quality control provisions shall be provided during the joint cleaning process to prevent or correct improper equipment and cleaning techniques that damage the concrete in any manner. Cleaned joints shall be approved by the Government prior to installation of the lubricant/adhesive and compression joint seal.

3.5.2.2 Conformance to Stretching and compression Limitations

Conformance to stretching and compression limitations shall be determined. The top surface of the compression seal shall be marked at 1 foot intervals in a manner clear and durable to enable length determinations of the seal. After installation, the distance between the marks shall be measured on the seal. If the stretching or compression exceeds 2 percent, the seal shall be removed and replaced with new joint at no additional cost to the Government. The seal shall be removed up to the last correct measurement. The seal shall be inspected a minimum of once per 100 feet of seal for compliance to the shrinkage or compression requirements. Measurements shall also be made at the same interval to determine conformance with depth and width of installation requirements. Compression seal that is not in conformance with specification requirements shall be removed and replaced with new joint seal at no additional cost to the Government.

3.5.2.3 Pavement Temperature

The pavement temperature shall be determined by placing a thermometer in the initial saw cut for the joint and the reading shall be recorded. The

thermometer shall remain in the joint for an adequate time to provide a control reading.

3.5.3 Product

The joint sealing system (compression seal and lubricant/adhesive) shall be inspected for proper rate of cure and bonding to the concrete, cuts, twists, nicks and other deficiencies. Seals exhibiting any defects, at any time prior to final acceptance of the project, shall be removed from the joint, wasted, and replaced in a satisfactory manner.

-- End of Section --

SECTION TABLE OF CONTENTS

DIVISION 02 - SITE WORK

SECTION 02770

CONCRETE SIDEWALKS, HANDICAP RAMPS, CURBS AND GUTTERS

PART 1 GENERAL

1.1 REFERENCES
1.2 MEASUREMENT AND PAYMENT
1.3 SUBMITTALS
1.4 WEATHER LIMITATIONS
1.4.1 Placing During Cold Weather
1.4.2 Placing During Warm Weather
1.5 PLANT, EQUIPMENT, MACHINES, AND TOOLS
1.5.1 General Requirements
1.5.2 Slip Form Equipment

PART 2 PRODUCTS

2.1 CONCRETE
2.1.1 Air Content
2.1.2 Slump
2.2 CONCRETE CURING MATERIALS
2.2.1 Impervious Sheet Materials
2.2.2 Burlap
2.2.3 White Pigmented Membrane-Forming Curing Compound
2.3 CONCRETE PROTECTION MATERIALS
2.4 JOINT FILLER STRIPS
2.4.1 Contraction Joint Filler for Curb and Gutter
2.4.2 Expansion Joint Filler, Premolded
2.5 JOINT SEALANTS
2.5.1 Joint Sealant, Cold-Applied
2.5.2 Joint Sealant, Hot-Poured
2.6 FORM WORK
2.6.1 Sidewalk and Handicap Ramp Forms
2.6.2 Curb and Gutter Forms

PART 3 EXECUTION

3.1 SUBGRADE PREPARATION
3.1.1 Sidewalk and Handicap Ramp Subgrades
3.1.2 Curb and Gutter Subgrade
3.1.3 Maintenance of Subgrade
3.2 FORM SETTING
3.2.1 Sidewalks
3.2.2 Curbs and Gutters
3.3 SIDEWALK AND HANDICAP RAMP CONCRETE PLACEMENT AND FINISHING
3.3.1 Formed Sidewalks and Handicap Ramps
3.3.2 Concrete Finishing
3.3.3 Edge and Joint Finishing
3.3.4 Surface and Thickness Tolerances

3.4 CURB AND GUTTER CONCRETE PLACEMENT AND FINISHING
3.4.1 Formed Curb and Gutter
3.4.2 Concrete Finishing
3.4.3 Joint Finishing
3.4.4 Surface and Thickness Tolerances
3.5 SIDEWALK AND HANDICAP RAMP JOINTS
3.5.1 Contraction Joints
3.5.2 Expansion Joints
3.6 CURB AND GUTTER JOINTS
3.6.1 Contraction Joints
3.6.2 Expansion Joints
3.7 CURING AND PROTECTION
3.7.1 General Requirements
3.7.1.1 Mat Method
3.7.1.2 Impervious Sheeting Method
3.7.1.3 Membrane Curing Method
3.7.2 Backfilling
3.7.3 Protection
3.7.4 Protective Coating
3.7.4.1 Application
3.8 FIELD QUALITY CONTROL
3.9 SURFACE DEFICIENCIES AND CORRECTIONS
3.9.1 Thickness Deficiency
3.9.2 Appearance
3.10 REMOVAL AND REPLACEMENT OF DEFECTIVE CONCRETE

-- End of Section Table of Contents --

SECTION 02770

CONCRETE SIDEWALKS, HANDICAP RAMPS, CURBS AND GUTTERS

PART 1 GENERAL

1.1 REFERENCES

The publications listed below form a part of this specification to the extent referenced. The publications are referred to in the text by basic designation only.

AMERICAN ASSOCIATION OF STATE HIGHWAY AND TRANSPORTATION OFFICIALS (AASHTO)

AASHTO M 224	(1968; Rev. 1974) Protective Coatings for Portland Cement Concrete

AMERICAN SOCIETY FOR TESTING AND MATERIALS (ASTM)

ASTM C 143	(1990a) Slump of Hydraulic Cement Concrete
ASTM C 171	(1995) Sheet Materials for Curing Concrete
ASTM C 309	(1997) Liquid Membrane-Forming Compounds for Curing Concrete
ASTM D 1557	(1991) Test Method for Laboratory Compaction Characteristics of Soil using Modified Effort(56,000 ft-lbf/cu. ft (2,700 kN-m/cu. m))
ASTM D 1751	(1983; R 1991) Preformed Expansion Joint Filler for Concrete Paving and Structural Construction (Nonextruding and Resilient Bituminous Types)
ASTM D 1752	(1984; R 1996) Preformed Sponge Rubber and Cork Expansion Joint Fillers for Concrete Paving and Structural Construction
ASTM D 3405	(1996) Joint Sealants, Hot-Applied, for Concrete and Asphalt Pavements

CORPS OF ENGINEERS (COE)

COE CRD-C 527	(1988) Standard Specification for Joint Sealants, Cold-Applied, Non-Jet-Fuel-Resistant, for Rigid and Flexible Pavements

FEDERAL SPECIFICATIONS (FS)

FS CCC-C-467	(Rev C) Cloth, Burlap, Jute (or Kenaf)

1.2 MEASUREMENT AND PAYMENT

a. Sidewalks: New Portland Cement Concrete sidewalks shall be measured and paid for by the number of square feet of 4-inch thick sidewalk constructed for the base year Line Item 0013A, "SIDEWALKS (THICKNESS 4 IN.)" of the Pricing Schedule.

b. Curbs and Gutters: New PCC Curbs and Gutters shall be measure and paid by the number of linear feet of each cross section constructed as indicated for the base year Line Items 0013AB, "CURBS AND GUTTERS (LESS THAN 1000 LF PER LOCATION)" and 0013AC, CURBS AND GUTTERS (MORE THAN 1000 LF PER LOCATION)" of the Pricing Schedule. Length for compensation shall be measured along the face of the curb at the gutter line.

c. Valley Gutters: New PCC Valley Gutters shall be measured by the number of linear feet of gutter completed and accepted. Compensation shall be for the base year Line Item 0013AD, "NEW CONCRETE VALLEY GUTTERS" of the Pricing Schedule.

d. Handicap Ramps: New PCC handicap ramps shall be measured by the number of square meters feet of ramp completed and accepted. Compensation shall be fro the base year Line Item 0013AF, "NEW PCC HANDICAP RAMP" of the Pricing Schedule.

1.3 SUBMITTALS

Government approval is required for submittals with a "GA" designation; submittals having an "FIO" designation are for information only. The following shall be submitted in accordance with Section 01300 SUBMITTAL DESCRIPTIONS:

SD-04 Drawings

Sidewalks, Handicap Ramps, Curbs and Gutters, Valley Gutters; FIO

Typical drawings showing dimensions, thicknesses, and jointing.

SD-09 Reports

Field Quality Control; FIO

Copies of all test reports within 24 hours of completion of the test.

SD-18 Records

Concrete; GA

Copies of certified delivery tickets for all concrete used in the construction.

1.4 WEATHER LIMITATIONS

1.4.1 Placing During Cold Weather

Concrete placement shall be discontinued when the air temperature reaches 40 degrees F and is falling. Placement may begin when the air temperature

reaches 35 degrees F and is rising. Provisions shall be made to protect the concrete from freezing during the specified curing period. If necessary to place concrete when the temperature of the air, aggregates, or water is below 35 degrees F, placement shall be approved in writing. Approval shall be contingent upon full conformance with the following provisions. The underlying material shall be prepared and protected so that it is entirely free of frost when the concrete is deposited. Mixing water shall be heated as necessary to result in the temperature of the in-place concrete being between 50 and 85 degrees F. Methods and equipment for heating shall be approved. The aggregates shall be free of ice, snow, and frozen lumps before entering the mixer. Covering and other means shall be provided for maintaining the concrete at a temperature of at least 50 degrees F for not less than 72 hours after placing, and at a temperature above freezing for the remainder of the curing period.

1.4.2 Placing During Warm Weather

The temperature of the concrete as placed shall not exceed 85 degrees F except where an approved retarder is used. The mixing water and/or aggregates shall be cooled, if necessary, to maintain a satisfactory placing temperature. In no case shall the placing temperature exceed 95 degrees F.

1.5 PLANT, EQUIPMENT, MACHINES, AND TOOLS

1.5.1 General Requirements

Plant, equipment, machines, and tools used in the work shall be subject to approval and shall be maintained in a satisfactory working condition at all times. The equipment shall have the capability of producing the required product, meeting grade controls, thickness control and smoothness requirements as specified. Use of the equipment shall be discontinued if it produces unsatisfactory results. The Contracting Officer shall have access at all times to the plant and equipment to ensure proper operation and compliance with specifications.

1.5.2 Slip Form Equipment

Slip form paver or curb forming machine, will be approved based on trial use on the job and shall be self-propelled, automatically controlled, crawler mounted, and capable of spreading, consolidating, and shaping the plastic concrete to the desired cross section in one pass.

PART 2 PRODUCTS

2.1 CONCRETE

Concrete shall conform to the applicable requirements of Section 02754 CONCRETE PAVEMENT FOR SMALL PROJECTS except as otherwise specified. Concrete shall have a minimum compressive strength of 3000 psi at 28 days. Maximum size of aggregate shall be 1-1/2 inches.

2.1.1 Air Content

Mixtures may have air content by volume of concrete of 3 to 5 percent, based on measurements made immediately after discharge from the mixer.

2.1.2 Slump

The concrete slump shall be 3 inches plus or minus 1 inch where determined in accordance with ASTM C 143.

2.2 CONCRETE CURING MATERIALS

2.2.1 Impervious Sheet Materials

Impervious sheet materials shall conform to ASTM C 171, type optional, except that polyethylene film, if used, shall be white opaque.

2.2.2 Burlap

Burlap shall conform to FS CCC-C-467.

2.2.3 White Pigmented Membrane-Forming Curing Compound

White pigmented membrane-forming curing compound shall conform to ASTM C 309, Type 2.

2.3 CONCRETE PROTECTION MATERIALS

Concrete protection materials shall be a linseed oil mixture of equal parts, by volume, of linseed oil and either mineral spirits, naphtha, or turpentine. At the option of the contractor, commercially prepared linseed oil mixtures, formulated specifically for application to concrete to provide protection against the action of deicing chemicals may be used, except that emulsified mixtures are not acceptable.

2.4 JOINT FILLER STRIPS

2.4.1 Contraction Joint Filler for Curb and Gutter

Contraction joint filler for curb and gutter shall consist of hard-pressed fiberboard.

2.4.2 Expansion Joint Filler, Premolded

Expansion joint filler, premolded, shall conform to ASTM D 1751 or ASTM D 1752, 3/8 inch thick, unless otherwise indicated.

2.5 JOINT SEALANTS

2.5.1 Joint Sealant, Cold-Applied

Joint sealant, cold-applied shall conform to COE CRD-C 527.

2.5.2 Joint Sealant, Hot-Poured

Joint sealant, hot-poured shall conform to ASTM D 3405.

2.6 FORM WORK

Form work shall be designed and constructed to ensure that the finished concrete will conform accurately to the indicated dimensions, lines, and elevations, and within the tolerances specified. Forms shall be of wood or steel, straight, of sufficient strength to resist springing during depositing and consolidating concrete. Wood forms shall be surfaced plank, 2-inch nominal thickness, straight and free from warp, twist, loose knots,

splits or other defects. Wood forms shall have a nominal length of 10 feet. Radius bends may be formed with 3/4-inch boards, laminated to the required thickness. Steel forms shall be channel-formed sections with a flat top surface and with welded braces at each end and at not less than two intermediate points. Ends of steel forms shall be interlocking and self-aligning. Steel forms shall include flexible forms for radius forming, corner forms, form spreaders, and fillers. Steel forms shall have a nominal length of 10 feet with a minimum of 2 welded stake pockets per form. Stake pins shall be solid steel rods with chamfered heads and pointed tips designed for use with steel forms.

2.6.1 Sidewalk and Handicap Ramp Forms

Sidewalk and handicap ramp forms shall be of a height equal to the full depth of the finished sidewalk or handicap ramp.

2.6.2 Curb and Gutter Forms

Curb and gutter outside forms shall have a height equal to the full depth of the curb or gutter. The inside form of curb shall have batter as indicated and shall be securely fastened to and supported by the outside form. Rigid forms shall be provided for curb returns, except that benders or thin plank forms may be used for curb or curb returns with a radius of 10 feet or more, where grade changes occur in the return, or where the central angle is such that a rigid form with a central angle of 90 degrees cannot be used. Back forms for curb returns may be made of 1-1/2 inch benders, for the full height of the curb, cleated together.

PART 3 EXECUTION

3.1 SUBGRADE PREPARATION

The subgrade shall be constructed to the specified grade and cross section prior to concrete placement. Subgrade shall be placed and compacted to a minimum of 95 percent of the laboratory maximum density to a depth of 6 inches or the full depth of fill, whichever depth is greater. The laboratory compaction shall be performed in accordance with ASTM D 1557 Method C.

3.1.1 Sidewalk and Handicap Ramp Subgrades

The subgrade shall be tested for grade and cross section with a template extending the full width of the sidewalk and supported between side forms.

3.1.2 Curb and Gutter Subgrade

The subgrade shall be tested for grade and cross section by means of a template extending the full width of the curb and gutter. The subgrade shall be of materials equal in bearing quality to the subgrade under the adjacent pavement.

3.1.3 Maintenance of Subgrade

The subgrade shall be maintained in a smooth, compacted condition in conformity with the required section and established grade until the concrete is placed. The subgrade shall be in a moist condition when concrete is placed. The subgrade shall be prepared and protected so as to produce a subgrade free from frost when the concrete is deposited.

3.2 FORM SETTING

Forms shall be carefully set to the indicated alignment, grade and dimensions. Forms shall be held rigidly in place by a minimum of three stakes per form placed at intervals not to exceed 4 feet. Corners, deep sections, and radius bends shall have additional stakes and braces, as required. Clamps, spreaders, and braces shall be used where required to insure rigidity in the forms. Forms shall be removed without injuring the concrete. Bars or heavy tools shall not be used against the concrete in removing the forms. Any concrete found defective after form removal shall be promptly and satisfactorily repaired. Forms shall be cleaned and coated with form oil each time before concrete is placed. Wood forms may, instead, be thoroughly wetted with water before concrete is placed, except that with probable freezing temperatures, oiling is mandatory.

3.2.1 Sidewalks

Forms for sidewalks shall be set with the upper edge true to line and grade with an allowable tolerance of 1/8 inch in any 10-foot long section. After forms are set, grade and alignment shall be checked with a 10-foot straightedge. Forms shall have a transverse slope as indicated 1/4-inch per foot with the low side adjacent to the roadway. Side forms shall not be removed for 12 hours after finishing has been completed.

3.2.2 Curbs and Gutters

The forms of the front of the curb shall be removed not less than 2 hours nor more than 6 hours after the concrete has been placed. Forms back of curb shall remain in place until the face and top of the curb have been finished as specified for concrete finishing. Gutter forms shall not be removed while the concrete is sufficiently plastic to slump in any direction.

3.3 SIDEWALK AND HANDICAP RAMP CONCRETE PLACEMENT AND FINISHING

3.3.1 Formed Sidewalks and Handicap Ramps

Concrete shall be placed in the forms in one layer of such thickness that when consolidated and finished the sidewalks will be of the thickness indicated. After concrete has been placed in the forms, a strike-off guided by side forms shall be used to bring the surface to proper section to be compacted. The concrete shall be consolidated with an approved vibrator, and the surface shall be finished to grade with a wood float, bull float, or darby, edged and broom finished.

3.3.2 Concrete Finishing

After straightedging, when most of the water sheen has disappeared, and just before the concrete hardens, the surface shall be finished to a smooth and uniformly fine granular or sandy texture free of waves, irregularities, or tool marks. A scored surface shall be produced by brooming with a fiber-bristle brush in a direction transverse to that of the traffic.

3.3.3 Edge and Joint Finishing

All slab edges, including those at formed joints, shall be finished carefully with an edger having a radius of 1/8 inch. Transverse joint shall be edged before brooming, and the brooming shall eliminate the flat

surface left by the surface face of the edger. Corners and edges which have crumbled and areas which lack sufficient mortar for proper finishing shall be cleaned and filled solidly with a properly proportioned mortar mixture and then finished.

3.3.4 Surface and Thickness Tolerances

Finished surfaces shall not vary more than 5/16 inch from the testing edge of a 10-foot straightedge. Permissible deficiency in section thickness will be up to 1/4 inch.

3.4 CURB AND GUTTER CONCRETE PLACEMENT AND FINISHING

3.4.1 Formed Curb and Gutter

Concrete shall be placed to the section required in a single lift. Consolidation shall be achieved by using approved mechanical vibrators.

3.4.2 Concrete Finishing

Exposed surfaces shall be floated and finished with a smooth wood float until true to grade and section and uniform in texture. Floated surfaces shall then be brushed with a fine-hair brush with longitudinal strokes. The edges of the gutter and top of the curb shall be rounded with an edging tool to a radius of 1/2 inch. Immediately after removing the front curb form, the face of the curb shall be rubbed with a wood or concrete rubbing block and water until blemishes, form marks, and tool marks have been removed. The front curb surface, while still wet, shall be brushed in the same manner as the gutter and curb top. The top surface of gutter and entrance shall be finished to grade with a wood float.

3.4.3 Joint Finishing

Curb edges at formed joints shall be finished as indicated.

3.4.4 Surface and Thickness Tolerances

Finished surfaces shall not vary more than 1/4 inch from the testing edge of a 10-foot straightedge. Permissible deficiency in section thickness will be up to 1/4 inch.

3.5 SIDEWALK AND HANDICAP RAMP JOINTS

Sidewalk and handicap ramp joints shall be constructed to divide the surface into rectangular areas. Transverse contraction joints shall be spaced at a distance equal to the sidewalk width or 5 feet on centers, whichever is less, in no case shall the ratio of length to width exceed 1.25 to 1. The contraction joints and the expansion joints will be constructed as shown on the drawings. Transverse expansion joints shall be installed at sidewalk returns and opposite expansion joints in adjoining curbs. Where the sidewalk is not in contact with the curb, transverse expansion joints shall be installed as indicated. Expansion joints shall be formed about structures and features which project through or into the sidewalk pavement, using joint filler of the type, thickness, and width indicated.

3.5.1 Contraction Joints

The contraction joints shall be formed in the fresh concrete by cutting a

groove in the top portion of the slab to a depth of at least one-fourth of the sidewalk slab thickness, using a jointer to cut the groove, or by sawing a groove in the hardened concrete with a power-driven saw, unless otherwise approved. Sawed joints shall be constructed by sawing a groove in the concrete with a 1/8-inch blade to the depth indicated. An ample supply of saw blades shall be available on the job before concrete placement is started, and at least one standby sawing unit in good working order shall be available at the jobsite at all times during the sawing operations.

3.5.2 Expansion Joints

Expansion joints shall be formed with 3/8 inch joint filler strips. Joint filler shall be placed with top edge 1/4 inch below the surface and shall be held in place with steel pins or other devices to prevent warping of the filler during floating and finishing. Immediately after finishing operations are completed, joint edges shall be rounded with an edging tool having a radius of 1/8 inch, and concrete over the joint filler shall be removed. At the end of the curing period, expansion joints shall be carefully cleaned and filled with joint sealer.

3.6 CURB AND GUTTER JOINTS

Curb and gutter joints shall be constructed at right angles to the line of curb and gutter.

3.6.1 Contraction Joints

Contraction joints shall be constructed directly opposite contraction joints in abutting portland cement concrete pavements and spaced so that monolithic sections between curb returns will not be less than 5 feet nor greater than 15 feet in length. Contraction joints shall be constructed by means of 1/8-inch thick separators and of a section conforming to the cross section of the curb and gutter. Separators shall be removed as soon as practicable after concrete has set sufficiently to preserve the width and shape of the joint and prior to finishing.

3.6.2 Expansion Joints

Expansion joints shall be formed by means of preformed expansion joint filler material cut and shaped to the cross section of curb and gutter. Expansion joints shall be provided in curb and gutter directly opposite expansion joints of abutting portland cement concrete pavement, and shall be of the same type and thickness as joints in the pavement. Where curb and gutter do not abut portland cement concrete pavement, expansion joints at least 3/8 inch in width shall be provided at intervals not exceeding 50 feet. Expansion joints shall be provided in nonreinforced concrete gutter at locations indicated.

3.7 CURING AND PROTECTION

3.7.1 General Requirements

Concrete shall be protected against loss of moisture and rapid temperature changes for at least 7 days from the beginning of the curing operation. Unhardened concrete shall be protected from rain and flowing water. All equipment needed for adequate curing and protection of the concrete shall be on hand and ready for use before actual concrete placement begins. Protection shall be provided as necessary to prevent cracking of the

pavement due to temperature changes during the curing period.

3.7.1.1 Mat Method

The entire exposed surface shall be covered with two or more layers of burlap. Mats shall overlap each other at least 6 inches. The mat shall be thoroughly wetted with water prior to placing on concrete surface and shall be kept continuously in a saturated condition and in intimate contact with concrete for not less than 7 days.

3.7.1.2 Impervious Sheeting Method

The entire exposed surface shall be wetted with a fine spray of water and then covered with impervious sheeting material. Sheets shall be laid directly on the concrete surface with the light-colored side up and overlapped 12 inches when a continuous sheet is not used. The curing medium shall not be less than 18 inches wider than the concrete surface to be cured, and shall be securely weighted down by heavy wood planks, or a bank of moist earth placed along edges and laps in the sheets. Sheets shall be satisfactorily repaired or replaced if torn or otherwise damaged during curing. The curing medium shall remain on the concrete surface to be cured for not less than 7 days.

3.7.1.3 Membrane Curing Method

A uniform coating of white-pigmented membrane-curing compound shall be applied to the entire exposed surface of the concrete as soon after finishing as the free water has disappeared from the finished surface. The compound must be shaded from the sun for 3 days. Formed surfaces shall be coated immediately after the forms are removed and in no case longer than 1 hour after the removal of forms. Curing compound shall be applied in two coats by hand-operated pressure sprayers at a coverage of approximately 200 square feet per gallon for both coats.

3.7.2 Backfilling

After curing, debris shall be removed and the area adjoining the concrete shall be backfilled, graded, and compacted to conform to the surrounding area in accordance with lines and grades indicated.

3.7.3 Protection

Completed concrete shall be protected from damage until accepted. The Contractor shall repair damaged concrete and clean concrete discolored during construction. Concrete that is damaged shall be removed and reconstructed for the entire length between regularly scheduled joints. Refinishing the damaged portion will not be acceptable. Removed damaged portions shall be disposed of as directed.

3.7.4 Protective Coating

Protective coating shall be applied to the exposed-to-view concrete surfaces in accordance with AASHTO M 224

3.7.4.1 Application

Curing and backfilling operation shall be completed prior to applying protective coating. Concrete shall be surface dry and thoroughly clean before each application. The protective coating shall be applied in

accordance to the manufacturer's recommendation. Coated surfaces shall be protected from vehicular and pedestrian traffic until dry.

3.8 FIELD QUALITY CONTROL

The Contractor shall perform the inspection and tests in accordance to the Construction Control Manual. Based upon the results of these inspections and tests, the Contractor shall take the action and submit reports, and any additional tests to insure that the requirements of these specifications are met.

3.9 SURFACE DEFICIENCIES AND CORRECTIONS

3.9.1 Thickness Deficiency

When measurements indicate that the completed concrete section is deficient in thickness by more than 1/4 inch the deficient section will be removed, between regularly scheduled joints, and replaced.

3.9.2 Appearance

Exposed surfaces of the finished work will be inspected by the Government and any deficiencies in appearance will be identified. Areas which exhibit excessive cracking, discoloration, form marks, or tool marks or which are otherwise inconsistent with the overall appearances of the work shall be removed and replaced.

3.10 REMOVAL AND REPLACEMENT OF DEFECTIVE CONCRETE

Defective or damaged concrete shall be removed and replaced as specified herein, and a method of curing shall be employed as directed. All removed concrete shall be replaced with concrete of the thickness and quality required by these specifications. In no case shall the removal and replacement of concrete result in a slab less than the full sidewalk or curb and gutter width or a joint less than 5 feet from a regularly scheduled transverse joint. The defective concrete shall be removed carefully so that the adjacent section is not damaged. When a portion of the unfractured slab is replaced, a full depth saw cut shall be made transversely across the slab in the required location, and the concrete shall be removed to provide a vertical face in the remaining portion of the slab. Prior to placement of the fresh concrete, the face of the slab shall be cleaned of debris and loose concrete. Transverse joints of the replaced slab or portion thereof shall be constructed as indicated. The joints shall be sealed as specified. Removal and replacement of defective or damaged concrete shall be accomplished by the Contractor at no additional cost to the Government.

-- End of Section --

SECTION TABLE OF CONTENTS

DIVISION 02 - SITE WORK

SECTION 02786

ASPHALT SLURRY SEAL

PART 1 GENERAL

1.1 REFERENCES
1.2 MEASUREMENT
1.2.1 Quantity of Bituminous Material
1.3 PAYMENT
1.3.1 Fog Seal
1.4 SUBMITTALS
1.5 DELIVERY AND STORAGE
1.6 WAYBILLS AND DELIVERY TICKETS
1.7 WEATHER LIMITATIONS
1.8 EQUIPMENT
1.8.1 Mixing and Application Machine
1.8.1.1 Fines Feeder
1.8.1.2 Fogging
1.8.1.3 Storage Capacity on Machine
1.8.1.4 Slurry Spreading Equipment
1.8.2 Bituminous Distributors
1.8.3 Pneumatic-Tired Rollers
1.8.4 Cleaning Equipment
1.8.5 Hand Tools

PART 2 PRODUCTS

2.1 BITUMINOUS MATERIAL
2.2 MINERAL AGGREGATE
2.2.1 Fine Aggregate
2.2.2 Particle Shape of Crushed Aggregate
2.3 MINERAL FILLERS
2.4 WATER
2.5 TACK COAT
2.5.1 Preparation of Emulsion
2.6 SLURRY SEAL MIXTURE
2.6.1 Job Mix Formula (JMF)
2.6.2 Properties
2.6.3 Setting Time

PART 3 EXECUTION

3.1 PREPARATION OF SURFACE
3.1.1 Preparation and Application of Tack Coat
3.1.1.1 Calibration of Bituminous Distributor
3.1.1.2 Tack Coat Application
3.1.2 Wetting Pavement Surface
3.1.3 Trial Application
3.2 PREPARATION AND APPLICATION OF SLURRY SEAL

3.2.1 Calibration of Slurry Seal Machine
3.2.2 Preparation
3.2.3 Application
3.2.3.1 Joints
3.2.3.2 Stability of Slurry Mixture
3.2.3.3 Hand Application
3.3 ROLLING
3.4 CURING
3.5 SAMPLING AND TESTING
3.5.1 Sampling
3.5.2 Testing
3.5.3 Calibration Test
3.6 CLEANUP

-- End of Section Table of Contents --

SECTION 02786

ASPHALT SLURRY SEAL

PART 1 GENERAL

1.1 REFERENCES

The publications listed below form a part of this specification to the extent referenced. The publications are referred to in the text by basic designation only.

AMERICAN SOCIETY FOR TESTING AND MATERIALS (ASTM)

ASTM C 127	(1988; R 1993) Specific Gravity and Absorption of Coarse Aggregate
ASTM C 128	(1993) Specific Gravity and Absorption of Fine Aggregate
ASTM C 136	(1996a) Sieve Analysis of Fine and Coarse Aggregates
ASTM C 150	(1996) Portland Cement
ASTM D 75	(1987; R 1992) Sampling Aggregates
ASTM D 140	(1993) Sampling Bituminous Materials
ASTM D 242	(1995) Mineral Filler for Bituminous Paving Mixtures
ASTM D 977	(1991) Emulsified Asphalt
ASTM D 1073	(1994) Fine Aggregate for Bituminous Paving Mixtures
ASTM D 1250	(1980; R 1990) Petroleum Measurement Tables
ASTM D 2397	(1994) Cationic Emulsified Asphalt
ASTM D 2419	(1995) Sand Equivalent Value of Soils and Fine Aggregate
ASTM D 2995	(1993) Determining Application Rate of Bituminous Distributors
ASTM D 3666	(1996a) Minimum Requirement for Agencies Testing and Inspecting Bituminous Paving Materials
ASTM D 3910	(1996) Design, Testing, and Construction of Slurry Seal

ASTM D 4318	(1995a) Liquid Limit, Plastic Limit, and Plasticity Index of Soils
ASTM D 4791	(1995) Flat or Elongated Particles in Coarse Aggregate
ASTM E 329	(1990) Evaluation of Testing and Inspection Agencies as Used in Construction

INTERNATIONAL SLURRY SURFACING ASSOCIATION (ISSA)

ISSA TB-102	(1990) Mixing, Setting and Water Resistance Test to Identify "Quick-Set" Emulsified Asphalts

1.2 MEASUREMENT

Bituminous material and aggregate to be paid for will be the measured square yards of asphalt slurry seal or fog seal placed and accepted under each Line Item.

1.2.1 Quantity of Bituminous Material

Bituminous material shall be considered as part of the line item unit price; no additional compensation shall be forthcoming for the bituminous material used in the completed work.

1.3 PAYMENT

Quantities of bituminous material, aggregate, and filler, determined in paragraph MEASUREMENT, will be paid for at the respective contract unit prices for the base year Line Items: _0006A, "SINGLE APPLICATION WITHOUT TACK COAT FROM 300 TO 5,000 SY PER LOCATION"; 0006AB, "SINGLE APPLICATION WITHOUT TACK COAT MORE THAN 5,000 SY PER LOCATION"; 0006AC, "SINGLE APPLICATION WITH TACK COAT 300 TO 5,000 SY PER LOCATION" and; 0006AD, "SINGLE APPLICATION WITH TACK COAT MORE THAN 5,000 SY PER LOCATION" of the Pricing Schedule. . Such payment shall constitute full compensation for all operations necessary to complete the specified work.

1.3.1 Fog Seal

Fog seal coat, basically a slurry seal coat without the aggregate, shall be paid for at the per square yard unit price for the base year Line Item heading 0011, "FOG SEAL". of the pricing schedule.

1.4 SUBMITTALS

Government approval is required for submittals with a "GA" designation; submittals having an "FIO" designation are for information only. The following shall be submitted in accordance with Section 01330 SUBMITTAL PROCEDURES:

SD-01 Data

Mixing and Application Machine; FIO. Job Mix Formula (JMF)GA.

Details and data on the make, type, and capacity of the slurry seal machine. A copy of the mixture proportions.

SD-14 Samples

Sampling and Testing; FIO.

At least 30 days prior to placement of the slurry mixture, representative samples in the following quantities:

Aggregate or aggregates which can be combined to form the specified gradation: 100 pounds.

Asphalt emulsion: 2 gallons.

Mineral filler (if required): 10 pounds.

Additional samples of materials, as required.

SD-09 Reports

Sampling and Testing; FIO.

A quality control report within 24 hours of each day of construction. The quality control test shall include tabulated test results showing asphalt cement content, moisture content, and aggregate gradation of all samples tested. A diagram identifying the location of each slurry sample taken.

SD-13 Certificates

Materials; FIO.

The material supplier's statement that the supplied material meets specified requirements. Each certificate shall be signed by an official authorized to certify in behalf of material supplier and shall identify quantity and date or dates of shipment or delivery to which the certificates apply.

1.5 DELIVERY AND STORAGE

Materials delivered to the site shall be inspected for contamination and damage, unloaded, and stored with a minimum of handling. Aggregates and mineral fillers shall be stockpiled to prevent segregation, contamination, or accumulation of excess moisture. Emulsion shall be stored preventing freezing, entrance of water, or breaking of the emulsion. Materials that are determined by the Contracting Officer to be contaminated, segregated, or damaged, or which fail to meet specification requirements shall be removed from the job site and replaced at no additional cost to the Government.

1.6 WAYBILLS AND DELIVERY TICKETS

Copies of waybills and delivery tickets shall be submitted during the progress of the work. Before the final statement is allowed, the Contractor shall file with the Contracting Officer certified waybills and delivery tickets for all materials used in the work covered by this section. The Contractor shall not remove bituminous material from tank cars or storage tanks until measurements of the remaining quantity have been determined.

1.7 WEATHER LIMITATIONS

Slurry seal shall not be applied if air or pavement temperatures are below 60 degrees F or if there is any possibility that the slurry will freeze before it has cured. No slurry seal shall be placed if rain is probable before the slurry seal will have sufficiently cured to prevent damage.

1.8 EQUIPMENT

Machines, tools, and equipment used in the performance of the work will be approved by the Contracting Officer before the work is started and shall be maintained in satisfactory condition.

1.8.1 Mixing and Application Machine

The slurry mixing and application machine (slurry seal machine) shall be a self-propelled, continuous flow mixing unit capable of accurately delivering a predetermined proportion of aggregate, water, mineral filler, and asphalt emulsion to the mixing chamber and of discharging the thoroughly mixed product on a continuous basis. The machine shall be capable of prewetting the aggregate immediately prior to mixing with the emulsion. The mixing unit of the machine shall be capable of thoroughly blending all ingredients.

1.8.1.1 Fines Feeder

The slurry seal machine shall be equipped with a fines feeder that provides an accurate metering device or method to introduce a predetermined proportion of mineral filler into the mixer at the same time and location as the aggregate. The fines feeder shall be used whenever added mineral filler is a part of the aggregate blend.

1.8.1.2 Fogging

The slurry seal machine shall be equipped with a water pressure system and fog-type spray bar adequate for complete fogging of the pavement surface. The spray bar shall be so mounted on the mixing machine that fogging will immediately precede application of the slurry seal mix.

1.8.1.3 Storage Capacity on Machine

The hoppers shall contain sufficient storage capacity of all materials required to produce a minimum of 5 tons of slurry seal.

1.8.1.4 Slurry Spreading Equipment

A variable-width mechanical-type squeegee spreader box shall be attached to the slurry seal mixing machine. The spreader box shall be equipped and maintained with flexible material in contact with the pavement surface to prevent loss of slurry seal from the spreader box on varying grades and crown. The spreader box shall be capable of adjustments to assure uniform spread. The spreader box shall be equipped for lateral distribution of the slurry mixture within the spreader box regardless of spreader box width or crown or bank of the pavement surface. The spreader box shall be kept clean, and buildup of asphalt and aggregate on either squeegee or spreader box will not be permitted. At the Contractor's option, burlap drags or other drags may be provided. If used, the drag shall be cleaned or replaced as needed to prevent accumulations or crust of slurry seal mix on the drag.

1.8.2 Bituminous Distributors

Bituminous distributors for applying tack coat shall be self-propelled and shall be designed and equipped to distribute asphalt emulsion uniformly on various widths of the pavement surface at readily determined and controlled rates ranging from 0.05 to 2.00 gallons per square yard, with a pressure range of 25 to 75 psi. Allowable variation from any specified rate shall not exceed 5.0 percent.

1.8.3 Pneumatic-Tired Rollers

Pneumatic-tired rollers shall be self-propelled and have wheels mounted on two axles so that the rear group of wheels will not follow in the tracks of the forward group. Tires shall be uniformly inflated to a minimum tire pressure of 50 psi. Rollers shall be equipped with water tanks and sprinkler apparatus which shall be used to keep the wheels damp and prevent adherence of bituminous materials to the wheels.

1.8.4 Cleaning Equipment

Cleaning equipment shall consist of power brooms, power blowers, power vacuums, air compressors, hand brooms, and other equipment as needed. The equipment shall be suitable for cleaning the surface and cracks in the existing pavement.

1.8.5 Hand Tools

Hand tools shall consist of hand squeegees, shovels, and other equipment as necessary to perform the work.

PART 2 PRODUCTS

2.1 BITUMINOUS MATERIAL

Bituminous material shall be emulsified asphalt conforming to ASTM D 977, Type SS-1; or to ASTM D 2397, Type CSS-1; or to quick set mixing grade ISSA TB-102.

2.2 MINERAL AGGREGATE

Mineral aggregate shall consist of crushed stone or crushed gravel. The portion of materials retained on the No. 4 sieve shall be known as coarse aggregate; the portion passing the No. 4 sieve and retained on the No. 200 sieve as fine aggregate; and the portion passing the No. 200 sieve as mineral filler. Two or more aggregates from different sources or of different types may be blended to produce the required gradation. When two or more aggregates are so blended, each shall meet the quality requirements stated herein. When tested in accordance with ASTM D 4318, aggregate shall be nonplastic. The aggregate shall have a sand equivalent of 45 or greater when tested in accordance with ASTM D 2419. Aggregate shall conform to the gradation given in Table I when tested in accordance with ASTM C 136.

TABLE I. AGGREGATE GRADATION

Sieve Size	Percent Passing
No. 4	100
No. 8	78-95
No. 16	55-80
No. 30	35-60

TABLE I. AGGREGATE GRADATION

Sieve Size	Percent Passing
No. 50	20-40
No. 100	10-22
No. 200	4-12

2.2.1 Fine Aggregate

The fine aggregate shall conform to the physical and supplementary requirements of ASTM D 1073, except as modified herein. Fine aggregate produced by crushing gravel shall have at least 90 percent by weight of crushed particles having two or more fractured faces in the portion retained on the No. 30 sieve. This requirement shall apply to material before blending with other aggregates when blending is necessary.

2.2.2 Particle Shape of Crushed Aggregate

The quantity of flat and elongated particles in any sieve size shall not exceed 20 percent by weight, when determined in accordance with ASTM D 4791.

2.3 MINERAL FILLERS

Mineral fillers, such as hydrated lime or portland cement, shall be added to the aggregate blend, if needed, to meet the gradation requirements or to improve the workability of the slurry seal mixture. Mineral fillers shall meet the gradation requirements of ASTM D 242. Portland cement shall conform to ASTM C 150, Type I or II.

2.4 WATER

Water for the slurry seal mixture shall be potable.

2.5 TACK COAT

Tack coat shall consist of one part emulsified asphalt and up to three parts water. The same type and grade of asphalt emulsion shall be used in the tack coat as used to make slurry seal, unless otherwise directed.

2.5.1 Preparation of Emulsion

Bituminous materials for emulsions shall be diluted by adding equal volumes of bituminous material and compatible water. If the bituminous material is to be diluted in the field, first test the mix by placing equal volumes of emulsion and water in a glass quart jar (do not use a metal container, as it could cause the mixture to "break") and mix for one minute. If the mixture "breaks", a different source of water or bituminous material is required.

2.6 SLURRY SEAL MIXTURE

2.6.1 Job Mix Formula (JMF)

The exact proportions of asphalt emulsion, aggregate, water, and mineral filler to be used in the preparation of the slurry seal shall be determined by laboratory mix design in accordance with ASTM D 3910 and shall be furnished by the Contractor. A copy of the JMF shall be submitted to the Contracting Officer for approval 30 days before the slurry seal mixture is placed.

2.6.2 Properties

The slurry seal JMF shall possess workability and stability properties consistent with the application requirements of paragraph PREPARATION AND APPLICATION OF SLURRY SEAL and, in addition, shall meet the consistency test requirement of a 1 inch flow and the wet track abrasion test requirement of not more than 75 grams per square foot abrasion loss when tested in accordance with ASTM D 3910. If quick set emulsion is used, the slurry seal mixture shall pass when using project aggregate and tested in accordance with ISSA TB-102. If it is established that a mixture meeting these requirements cannot be produced from the furnished materials, these materials shall be replaced.

2.6.3 Setting Time

The mixture shall attain an initial set in not less than 15 minutes nor more than 12 hours when tested in accordance with ASTM D 3910. The setting time may be regulated by the addition of mineral fillers or chemical agents provided that provision for their inclusion is contained in the JMF.

PART 3 EXECUTION

3.1 PREPARATION OF SURFACE

Prior to application of the slurry seal, the existing pavement surface shall be cleaned, accumulation of water removed, and unsatisfactory areas repaired. As directed, weak areas or soft spots indicated by alligator cracking, pot holes, or any cracking indicating a structural deficiency shall be removed and replaced as specified in Section 02788 PATCHING AND REPAIRING BITUMINOUS PAVEMENTS. Cracks in the surface not due to structural deficiencies shall be cleaned by blowing out with compressed air. Cracks larger than 1/8 inch in width shall be routed and sealed as specified in Section 02975 SEALING CRACKS IN BITUMINOUS PAVEMENTS. Excess sealant material shall be removed from the pavement surface prior to placement of the slurry seal.

3.1.1 Preparation and Application of Tack Coat

3.1.1.1 Calibration of Bituminous Distributor

The Contractor shall furnish all equipment, materials, and labor necessary to calibrate the bituminous distributor. Calibration shall be made with the approved job material and prior to applying the tack coat material to the prepared surface. Calibration of the bituminous distributor shall be in accordance with ASTM D 2995.

3.1.1.2 Tack Coat Application

After the surface has been prepared for the slurry seal, a tack coat shall be applied with a bituminous distributor at the rate of 0.05 to 0.10 gallons per square yard of surface. The tack coat shall be allowed to cure before the slurry seal is applied.

3.1.2 Wetting Pavement Surface

Immediately prior to application of the slurry seal, the surface of the pavement and all crack faces shall be moistened with a fog spray of water

from the spray bar on the slurry seal machine. No free water shall be on the surface of the pavement following the fog spray. The rate of application of the fog spray shall be adjusted during the day to suit pavement temperatures, surface texture, humidity, and dryness of the pavement surface.

3.1.3 Trial Application

Prior to production application of the slurry seal, a test section at least 200 feet long and 20 feet wide shall be placed by the Contractor using the approved materials. The slurry seal shall be placed and rolled in accordance with the specified requirements. Tests shall be made to determine the asphalt cement and moisture contents and the aggregate gradation. If test results are satisfactory, the test section shall remain in place as part of the completed slurry seal. If tests indicate that the slurry seal does not conform to specification requirements, necessary adjustments to the slurry seal machine and application procedures shall be made immediately, and additional test sections shall be constructed and samples shall be taken and tested for conformance with specification requirements. If tests indicate that the slurry seal does not conform to specification requirements, the test section shall be removed at no cost to the Government, and the material disposed of off-site. In no case shall the Contractor start full production of slurry seal without approval.

3.2 PREPARATION AND APPLICATION OF SLURRY SEAL

3.2.1 Calibration of Slurry Seal Machine

The slurry seal machine shall be calibrated in the presence of the Contracting Officer to assure that it will produce and apply a mixture which conforms to the JMF. Commercial slurry seal machines shall be provided with a method of calibration by the manufacturer. Because of varying mechanical properties, each machine may have a different calibration procedure. However, a calibration method based on a revolution counter on any shaft which is mechanically interlocked with the emulsion pump, water pump, fines feeder, and the aggregate conveyor can be used to determine the relative quantities of each component per revolution for various gate openings, metering, valve opening, or sprocket sizes. The slurry seal machine shall be calibrated with the project materials prior to the start of work, or whenever there is a change in materials.

3.2.2 Preparation

The slurry seal shall be mixed and applied with a slurry machine. A minimum amount of water shall be used as necessary to obtain a workable and homogenous mixture. The mixture shall be of proper consistency with no segregation when deposited on the surface of the pavement and no additional materials shall be added to the mixture. The slurry mixture shall show no signs of uncoated aggregate or premature breaking of emulsion when applied to the pavement surface. The total time of mixing shall not exceed 2 minutes.

3.2.3 Application

Sufficient quantities of the slurry seal mixture shall be fed into the spreader box to obtain a uniform and complete coverage of the pavement. The slurry seal machine shall be operated at a speed that will keep the amount of slurry in the spreader box essentially constant. The slurry shall be applied maintaining the minimum thickness at not less than 1/8 inch.

If multiple applications are required, each application shall be thoroughly cured before another application is placed. No oversized aggregate particles shall be allowed in the slurry seal mixture, and no buildup of cured slurry seal mix shall be allowed to collect in the spreader box. The finished surface shall be left without streaks.

3.2.3.1 Joints

The longitudinal joint between adjacent lanes shall have no visible lap, pinholes, or uncovered areas. Thick spots caused by overlapping shall be smoothed immediately with hand squeegees before the emulsion breaks. Overlaps which occur at transverse joints shall also be smoothed before the emulsion breaks, so that a uniform surface is obtained which contains no breaks or discontinuities. Whenever possible, joints should be made while the slurry seal mixture applied in the first pass is still semifluid and workable. If operations preclude fresh working of joints, the previously laid pass shall be sufficiently cured in order to support the spreader box without scarring, tearing, or scraping.

3.2.3.2 Stability of Slurry Mixture

The slurry seal mixture shall possess sufficient stability so that segregation or premature breaking of emulsion in spreader box does not occur. The mixture shall be homogenous following mixing and spreading, shall be free of bleeding of water or of emulsion, and free of segregation of emulsion and aggregate fines from the coarser aggregate fraction.

3.2.3.3 Hand Application

Areas which cannot be reached with the slurry seal machine shall be treated with hand squeegees to provide complete and uniform coverages. All areas shall be tacked and fogged prior to placing slurry seal by hand. Close attention should be given during hand squeegee spreading of slurry seal mixture. Overworking will sometimes cause partial breaking of the emulsion before the final spreading is completed; this results in a nonuniform material that will have poor appearance and low durability.

3.3 ROLLING

As soon as the slurry seal has cured, sufficiently to prevent displacement or pickup by wheel traffic, it shall be rolled with the pneumatic roller. A minimum of 5 coverages shall be applied, and, when required, rolling shall continue until all ridges have been smoothed out and a uniform surface is obtained.

3.4 CURING

Completed slurry seal shall be protected from traffic by barricades and markers until the slurry seal has cured. Areas which are damaged by traffic or from other causes shall be repaired by the Contractor at no cost to the Government.

3.5 SAMPLING AND TESTING

3.5.1 Sampling

Samples of slurry seal materials shall be furnished by the Contractor at no expense to the Government. Sampling of aggregates, unless otherwise specified, shall be in accordance with the requirements of ASTM D 75.

Sampling of bituminous material, unless otherwise specified, shall be in accordance with the requirements of ASTM D 140. Additional samples of materials shall be furnished as required.

3.5.2 Testing

Materials shall be tested to establish compliance with the specified requirements. Quality control testing shall be the responsibility of the Contractor and shall be performed by an approved independent commercial testing laboratory or by Contractor testing, subject to approval. Testing agencies shall meet the requirements outlined in ASTM D 3666 and ASTM E 329. At least 30 days prior to the use of materials in the work, certified copies of the test results specified herein and in referenced publications shall be submitted for approval. In addition for each day that slurry seal is placed, a minimum of one sample of slurry seal shall be taken from the discharge chute of the slurry seal machine and tested to determine asphalt cement content, moisture content, and aggregate gradation. Slurry seal mixture that fails to meet the mix design proportions shall be rejected.

3.5.3 Calibration Test

The Contractor shall furnish all equipment and materials and labor necessary to calibrate the slurry seal machine. All calibrations shall be made with the approved job materials and prior to applying the slurry seal materials to the prepared surface. A copy of the calibration test results shall be submitted before the slurry seal machine is used on the job.

3.6 CLEANUP

On completion of work, all trash, discarded slurry seal material, or other refuse shall be collected and removed from the site and disposed of off of Government-controlled land.

-- End of Section --

SECTION TABLE OF CONTENTS

DIVISION 02 - SITE WORK

SECTION 02787

BITUMINOUS REJUVENATION

PART 1 GENERAL

1.1 REFERENCES
1.2 UNIT PRICES
1.2.1 Measurement
1.2.1.1 Treated Pavement
1.2.2 Payment
1.3 PERFORMANCE
1.4 SUBMITTALS
1.5 MATERIAL STORAGE AND HANDLING
1.6 WEATHER LIMITATION
1.7 EQUIPMENT, TOOLS, AND MACHINES
1.7.1 Bituminous Storage Tanks
1.7.2 Bituminous Distributor
1.7.3 Brooms and Blowers

PART 2 PRODUCTS

2.1 REJUVENATOR
2.2 AGGREGATE

PART 3 EXECUTION

3.1 PREPARATION OF SURFACE
3.2 APPLICATION OF REJUVENATOR MATERIAL
3.2.1 Excess Rejuvenator Material
3.2.2 Ponding and Puddling of Rejuvenator Material
3.2.3 Excess Runoff of Rejuvenator
3.2.4 Insufficient Rejuvenator Material
3.3 SAMPLING AND TESTING
3.3.1 Sampling
3.3.2 Testing
3.3.3 Calibration Test
3.4 TEST SECTION

-- End of Section Table of Contents --

SECTION 02787

BITUMINOUS REJUVENATION

PART 1 GENERAL

1.1 REFERENCES

The publications listed below form a part of this specification to the extent referenced. The publications are referred to in the text by basic designation only.

AMERICAN SOCIETY FOR TESTING AND MATERIALS (ASTM)

ASTM D 92	(1998a) Flash and Fire Points by Cleveland Open Cup
ASTM D 140	(2000) Sampling Bituminous Materials
ASTM D 244	(1999) Emulsified Asphalts
ASTM D 1250	(1980; R 1997el) Petroleum Measurement Tables
ASTM D 1856	(1995a) Recovery of Asphalt from Solution by Abson Method
ASTM D 2170	(1995) Kinematic Viscosity of Asphalts (Bitumens)
ASTM D 2171	(1994) Viscosity of Asphalts by Vacuum Capillary Viscometer
ASTM D 2172	(1995) Quantitative Extraction of Bitumen from Bituminous Paving Mixtures
ASTM D 2995	(1999) Determining Application Rate of Bituminous Distributors

1.2 UNIT PRICES

1.2.1 Measurement

1.2.1.1 Treated Pavement

The quantity of pavement treated with rejuvenator to be paid for will be the number of square yards completed and accepted as determined by the Contracting Officer. The number of square yards of treated pavement will be determined by measuring the length and width of the specified work area. Measurements to determine the number of square yards will be along the surface of the pavement and will be to the closest inch for width and the closest foot for length.

1.2.2 Payment

Quantities of and treated pavement will be paid for at respective unit prices for the base year Line Item heading 0009, "REJUVENATING AGENT" of the Pricing Schedule. Payment will not be made for quantities of treated pavement when actual application rate of rejuvenator is more than 20 percent below the approved application rate until deficiency is corrected in accordance with paragraph Insufficient Rejuvenator Material.

1.3 PERFORMANCE

The rejuvenator shall be applied so that the test properties of binder extracted from samples of the upper 3/8 inch of the surface of the test section show that viscosities have decreased by at least 40 percent. The percent decrease in viscosity shall be computed as follows:

100 ((Viscosity of untreated sample) - (Viscosity of treated sample))/ (Viscosity of untreated samples)

1.4 SUBMITTALS

Government approval is required for submittals with a "G" designation; submittals not having a "G" designation are for information only. When used, a designation following the "G" designation identifies the office that will review the submittal for the Government. The following shall be submitted in accordance with Section 01330 SUBMITTAL PROCEDURES:

SD-04 Samples

Bituminous Binder;

Samples of sufficient size to provide enough bituminous binder for determination of viscosity.

1.5 MATERIAL STORAGE AND HANDLING

Rejuvenator material shall be protected from excessively high or low temperatures. The rejuvenator shall be stored at temperatures recommended by the manufacturer. Smoking, fire or flames other than heaters that are part of the equipment will not be permitted in the vicinity of heating, distributing or transferring operations for rejuvenators that are flammable.

1.6 WEATHER LIMITATION

The rejuvenator shall be applied to a dry surface and only when the atmospheric temperature in the shade is 50 degrees F or above. Application shall be delayed if rain appears imminent within 8 hours following planned time of application.

1.7 EQUIPMENT, TOOLS, AND MACHINES

Equipment, tools, and machines shall be subject to approval and shall be maintained in satisfactory working condition at all times.

1.7.1 Bituminous Storage Tanks

Bituminous storage tanks shall be capable of heating the bituminous material under effective and positive control at all times to the required temperature. Heating shall be accomplished by steam coils, hot oil, electricity, or other suitable method. An armored thermometer shall be

affixed to the tank so that the temperature of the bituminous material may be read at all times.

1.7.2 Bituminous Distributor

The bituminous distributor shall be designed and equipped to spray the bituminous material in a uniform double or triple lap at the temperature recommended by the manufacturer, at variable widths, and at readily determined and controlled rates from 0.04 to 0.2 gallon per square yard with an allowable variation from the specified rate of not more than plus or minus 5 percent. Distributor equipment shall include a separate power unit for the bitumen pump, full-circulation spray bars, tachometer, pressure gauges, volume-measuring devices, adequate heaters for heating of materials to the proper application temperature, a thermometer for reading the temperature of tank contents, and a hand hose attachment suitable for applying bituminous material manually to areas inaccessible to the distributor. The distributor shall be equipped for circulation and agitation of the bituminous material during the heating process.

1.7.3 Brooms and Blowers

Brooms and blowers shall be of the power type and shall be suitable for cleaning the surfaces of bituminous pavements.

PART 2 PRODUCTS

2.1 REJUVENATOR

The chemical rejuvenator shall have a proven record of satisfactory performance based on the ability of the material to decrease the viscosity of the binder material, to reduce the rate of loss of fines, and to retard crack propagation. The material selected shall neither permanently damage nor obscure pavement markings. Specific application specifications shall be as recommended by the manufacturer and approved by the Contracting Officer. The rejuvenating material shall be sampled according to ASTM D 140 and the test results shall conform to the following requirements:

Property	Requirement	Test Method
Residue, percent	55 minimum	ASTM D 244 (1)
Viscosity at 140 degrees F, centistokes (2)	80-500	ASTM D 2170
Flash Point (3) Cleveland Open Cup (COC), degrees F	350 minimum	ASTM D 92

(1) ASTM D 244 evaporation test for percent residue shall be modified by heating 50 gram samples to 300 degrees F until foaming ceases, cooling immediately, and calculating the results.

(2) Viscosity on the residue obtained from evaporation test.

(3) Flash point on residue from evaporation test.

2.2 AGGREGATE

Gradation of mineral aggregate shall meet the following requirements:

Sieve Designation	Percent by Weight Passing
No. 16	100
No. 30	40-75
No. 50	4-12
No. 100	0-5

PART 3 EXECUTION

3.1 PREPARATION OF SURFACE

Immediately before applying the rejuvenator, loose material, dirt, clay, or other objectionable material shall be removed from the surface to be treated. After the cleaning operation and prior to application of the rejuvenator, the Contracting Officer will inspect the area to be treated to determine fitness of the area to receive the rejuvenator.

3.2 APPLICATION OF REJUVENATOR MATERIAL

Following preparation and subsequent inspection of the surface, the rejuvenator shall be uniformly applied over the surface to be treated at the approved rate with an allowable variation from the approved rate of application of plus or minus 20 percent. Materials shall be applied at the temperature recommended by the supplier. To obtain uniform application of the rejuvenator on the surface treated at the junction of previous and subsequent applications, building paper shall be spread on the surface at a sufficient distance back from the ends of each application so that the rejuvenator may be started and stopped on the paper. Immediately after application, the building paper shall be removed and properly disposed. Areas missed by the distributor shall be properly treated with the hand spray. Following application of the rejuvenator, the surface shall not be disturbed for a period of at least 24 hours.

3.2.1 Excess Rejuvenator Material

Approved mineral aggregate shall be provided by the Contractor and shall be spread in sufficient quantity to effectively blot up any excess rejuvenator material remaining on the treated pavement surface after 24 hours.

3.2.2 Ponding and Puddling of Rejuvenator Material

If low spots and depressions in the pavement surface cause ponding or puddling of the rejuvenating agent, the pavement surface shall be broomed with a broom drag. Brooming shall continue until the pavement surface is free of any pools of excess material.

3.2.3 Excess Runoff of Rejuvenator

Pavement surfaces which have excessive runoff of rejuvenator due to surface grade shall be treated in 2 or more applications. Each additional application shall be performed after the prior application of material has penetrated into the pavement.

3.2.4 Insufficient Rejuvenator Material

When it is determined by the Contracting Officer that the actual application rate of the rejuvenator is more than 20 percent below the approved application rate, subsequent applications of rejuvenator shall be made to bring the actual application rate up to the approved rate; additional rejuvenator material shall penetrate into the pavement surface within 24 hours after application.

3.3 SAMPLING AND TESTING

3.3.1 Sampling

Sampling of the test section shall be performed before and after the pavement has been rejuvenated. The samples taken from the treated test section areas shall be taken no sooner than 24 hours after application of the rejuvenator.

3.3.2 Testing

Tests shall be conducted to extract the bituminous binder according to ASTM D 2172 and recover according to ASTM D 1856. Viscosity of the bituminous material shall be measured in accordance with ASTM D 2170 or ASTM D 2171 as applicable and shall be conducted at 140 degrees F unless otherwise specified. The change in viscosity shall be determined for each application rate of rejuvenator in the test section from tests conducted on samples taken before and samples taken after the pavement surface has been rejuvenated. Sampling and testing shall be done by the Contractor.

3.3.3 Calibration Test

Contractor shall furnish all equipment, materials and labor necessary to calibrate the bituminous distributor. Calibration shall be made with approved job material and prior to applying the rejuvenator to the prepared surface. Calibration of the bituminous distributor shall be in accordance with ASTM D 2995.

3.4 TEST SECTION

Prior to application of the rejuvenator, representative test sections shall be prepared on the pavement to be treated. The test sections shall be treated with various amounts of rejuvenator, and tests shall be conducted on samples obtained from the top 3/8 inch of each of these treated areas to measure viscosity and thus determine desired application rate. The samples of treated material shall be obtained no sooner than 24 hours after application of rejuvenator. An application rate shall be selected by the Contractor to obtain the specified reduction in asphalt viscosity and to ensure that all rejuvenator material penetrates into the pavement surface within 24 hours. The application rate shall not exceed that which the pavement can absorb within 24 hours. Application of the rejuvenator shall not begin until the test sections have been evaluated and the required application rate has been approved.

-- End of Section --

SECTION TABLE OF CONTENTS

DIVISION 02 - SITE WORK

SECTION 02788

PATCHING AND REPAIRING OF BITUMINOUS PAVEMENTS

PART 1 GENERAL

1.1 SCOPE
1.2 DEFINITION
1.3 APPLICABLE SECTIONS
1.4 AREAS TO BE REPAIRED
1.5 WAYBILLS AND DELIVERY TICKETS
1.6 MEASUREMENT
1.7 PAYMENT

PART 2 PRODUCTS

PART 3 EXECUTION

3.1 PATCHING AND REPAIR
3.1.1 Excavation:
3.1.2 Preparation of Subgrade
3.1.3 Aggregate Base Course
3.1.4 Tack & Prime Coats
3.1.5 Bituminous Course
3.2 CONSTRUCTION QUALITY CONTROL

-- End of Section Table of Contents --

SECTION 02788

PATCHING AND REPAIRING OF BITUMINOUS PAVEMENTS

PART 1 GENERAL

1.1 SCOPE

Patching and Repairing shall consist of replacing all defective portions of the existing pavement with 3-inches new asphaltic material, on 6-inches aggregate base course, on 6-inches compacted subbase.

1.2 DEFINITION

Patching and repair shall consist of removal of existing bituminous surfacing, base, and subgrade to a depth indicated and replacement with a full depth bituminous course prime coat, tack coat and bituminous surface treatment to the line and grades indicated.

1.3 APPLICABLE SECTIONS

The work specified under this section shall be accomplished in accordance with the applicable paragraphs of the following sections:

Section 02300 EARTHWORK
Section 02722 AGGREGATE BASE COURSE
Section 02513 BITUMINOUS COURSE
Section 02748 BITUMINOUS TACK COAT AND PRIME COATS
Section 02975 SEALING OF CRACKS IN BITUMINOUS PAVEMENTS

1.4 AREAS TO BE REPAIRED

Areas to be Repaired:

Pavement defects to be repaired shall include the following:

- Cracks over 1 inch in width
- Depressions over 1 inch in depth
- Potholes
- Rutting 1 inch in depth
- Broken Edges and Shear Failures
- Existing Patches in Unsatisfactory Condition
- Alligator Cracked Areas

and other defects that may be indicated by the Contracting Officer. The areas to be repaired shall be marked by the Contracting Officer and reviewed with the Contractor prior to the work being accomplished.

1.5 WAYBILLS AND DELIVERY TICKETS

Before the final statement is allowed, the Contractor shall file with the Contracting Officer certified waybills and certified delivery tickets for all bituminous materials used in the construction of the pavement covered by the contract. The Contractor shall not remove bituminous material from storage until the initial outage and temperature measurements have been taken. The delivery or storage units will not be released until the final outage has been taken.

1.6 MEASUREMENT

The quantity of patching shall be the number of square yards for deep patching based on the area of the asphalt concrete actually removed and patched in the completed and accepted patched area. The quantities shall be determined by measuring the length and width of each area of asphalt concrete to be removed with the specified work area.

1.7 PAYMENT

Payment will be to the nearest square yard for deep patching. Payment will be at the respective contract unit price for the particular option year Line Items under _009, "Patching Existing Asphalt" of the Pricing Schedule. Such payment shall constitute full compensation for aggregate subbase course, aggregate base course, tack coat, bituminous course and other operations necessary to complete the work as specified herein.

PART 2 PRODUCTS (Not Applicable)

PART 3 EXECUTION

3.1 PATCHING AND REPAIR

3.1.1 Excavation:

Excavation shall consist of saw cutting and removing unsatisfactory portions of the existing bituminous surfacing, base material, and subgrade as required in preparation for patching. Sawcutting will be in neat and straight lines for the full depth of the bituminous surface course. The sawcut will be of sufficient size to provide a minimum clear space of 1 foot between the failed area and the sawcut edge. The aggregate base course material between the sawcut and the failed areas shall be kept in place to prevent undercutting of the area outside the sawcut. Depth of excavation will be sufficient to remove all failed and unsatisfactory (unstable) material to a minimum allowable depth of excavation of 6 inches below the bottom of the existing aggregate base course.

3.1.2 Preparation of Subgrade

After the pavement section and all unsatisfactory material has been removed, the excavation shall be filled properly compacted satisfactory material. The subgrade shall be shaped to match the existing line and grade and then compacted to 95 percent maximum density, for a minimum depth of 6 inches. Due to the small size of most of the patched areas, most of the compaction will be performed by hand. Compaction shall be with approved mechanical compactors. This operation shall include any reshaping and wetting required to obtain proper compaction. All soft or otherwise unsatisfactory material shall be removed and replaced with satisfactory material at no additional cost to the Government.

3.1.3 Aggregate Base Course

The excavated aggregate base material shall be replaced to match the thickness, shape, and grade of the existing aggregate base course as specified in Section 02722 AGGREGATE BASE COURSE.

3.1.4 Tack & Prime Coats

The edges of the sawcut shall be tack coated and the surface of the

aggregate base course shall be prime coated in accordance with the applicable paragraphs of Section 02748 BITUMINOUS TACK AND PRIME COATS.

3.1.5 Bituminous Course

Bituminous course shall be placed in the lines and grades indicated in accordance with the applicable paragraphs of Section 02513 BITUMINOUS COURSE

3.2 CONSTRUCTION QUALITY CONTROL

Attention is directed to the applicable sections which requires the Contractor to perform quality control inspection, testing, and reporting.

-- End of Section --

SECTION TABLE OF CONTENTS

DIVISION 02 - SITE WORK

SECTION 02811

IRRIGATION SYSTEMS

PART 1 GENERAL

1.1 SUMMARY
1.2 REFERENCES
1.3 PERFORMANCE REQUIREMENTS
1.4 SUBMITTALS
1.5 DELIVERY AND STORAGE
1.6 FIELD MEASUREMENTS
1.7 UNIT PRICES
1.7.1 Measurement
1.7.1.1 Irrigation Pipe
1.7.1.2 Sprinkler Heads
1.7.1.3 Post Irrigation Installation Testing, Field Training & Clean-up
1.7.2 Payment

PART 2 PRODUCTS

2.1 GENERAL MATERIALS AND EQUIPMENT REQUIREMENTS
2.1.1 Standard Products
2.1.2 Nameplates
2.1.3 Extra Stock
2.2 PIPING MATERIALS
2.2.1 Copper Tubing and Associated Fittings
2.2.1.1 Tubing
2.2.1.2 Fittings
2.2.2 Red Brass Pipe and Associated Fittings
2.2.2.1 Pipe
2.2.2.2 Fittings
2.2.3 Galvanized Steel Pipe and Associated Fittings
2.2.3.1 Pipe
2.2.3.2 Fittings
2.2.4 Polyvinyl Chloride (PVC) Pipe, Fittings, Solvent Cement, and Risers
2.2.4.1 Pipe
2.2.4.2 Fittings
2.2.4.3 Solvent Cement
2.2.4.4 Risers
2.2.5 Polyethylene (PE) Plastic Piping
2.2.5.1 Distribution Tubing
2.2.5.2 Fittings
2.2.6 Dielectric Fittings
2.3 HEADS
2.3.1 Multi-Outlet Emitters
2.3.2 Rotary Pop-Up Sprinklers
2.3.3 Bubblers

2.4 VALVES
2.4.1 Gate Valves, Less than 3 Inches
2.4.2 Gate Valves, 3 Inches and Larger
2.4.3 Quick Coupling Valves
2.4.4 Remote Control Valves, Electrical
2.4.5 Automatic Drain Valves
2.4.6 Reduced Pressure Backflow Preventer Assembly
2.5 ACCESSORIES AND APPURTENANCES
2.5.1 Valve and Emitter Boxes
2.5.2 Pressure Gauges
2.5.3 Service Clamps
2.5.4 Water Hammer Arresters
2.5.5 Drip Valve Assembly Accessories
2.5.5.1 Wye Strainer
2.5.5.2 Pressure Regulator
2.5.5.3 Riser Adapters
2.5.5.4 Tubing Stakes
2.5.5.5 Emitter Outlet Check Valve (Insect Cap
2.5.5.6 Closure Caps
2.6 AUTOMATIC CONTROLLERS, ELECTRICAL
2.7 ELECTRICAL WORK
2.8 CONCRETE MATERIALS
2.9 WATER SUPPLY MAIN MATERIALS
2.10 INSULATING JOINTS
2.11 PEA GRAVEL

PART 3 EXECUTION

3.1 INSTALLATION
3.1.1 Trenching
3.1.1.1 Underground Utility and Communications
3.1.2 Piping System
3.1.2.1 Cover
3.1.2.2 Clearances
3.1.2.3 Minimum Slope
3.1.3 Piping Installation
3.1.3.1 Polyvinyl Chloride (PVC) Pipe
3.1.3.2 Soldered Copper Tubing
3.1.3.3 Threaded Brass or Galvanized Steel Pipe
3.1.3.4 Insulating Joints
3.1.4 Valves
3.1.4.1 Remote Control Valves, Electrical
3.1.4.2 Drip Valve Assembly
3.1.4.3 Drain Valves
3.1.5 Quick Coupling Valves
3.1.6 Installation of Drip Irrigation System
3.1.6.1 Distribution Tubing
3.1.6.2 Multi-Outlet Emitters
3.1.6.3 Tubing Stakes
3.1.7 Turf Heads
3.1.8 Reduced Pressure Backflow Preventer Assembly
3.1.8.1 Insulation
3.1.9 Control Wire and Conduit
3.1.9.1 Wires
3.1.9.2 Loops
3.1.9.3 Expansion and Contraction
3.1.9.4 Splices
3.1.10 Automatic Controllers
3.1.11 Thrust Blocks

3.1.12 Backfill (Minimum Cover)
3.1.13 Disinfection
3.1.14 Cleaning of Piping
3.2 FIELD TESTS
3.2.1 Hydrostatic Pressure Test
3.2.2 Leakage Tests
3.2.3 Operation Test
3.3 POSTING FRAMED INSTRUCTIONS
3.4 FIELD TRAINING
3.5 CLEAN-UP
3.6 WATER PROGRAM
3.6.1 Irrigation Program
3.6.2 Irrigation Program Adjustment
3.7 MAINTENANCE

-- End of Section Table of Contents --

SECTION 02811

IRRIGATION SYSTEMS

PART 1 GENERAL

1.1 SUMMARY

The irrigation design and installation shall achieve full irrigation coverage of all plantings and turf. Provide a complete automatic turf and drip irrigation system for all plantings as per specifications and details. Layout of circuits shall be clearly defined into hydrozones/microclimates with similar water requirements and precipitation rates. Ensure each plant receives the required amounts of water without over or under saturating other plants within the same circuit. The irrigation system is designed based on the static pressure at the backflow preventer at the time of installation. A pressure test shall be performed prior to the start of work. Design shall meet all local codes and regulations and shall operate properly within the acceptable use of all equipment used.

1.2 REFERENCES

The publications listed below form a part of this specification to the extent referenced. The publications are referred to in the text by basic designation only.

AMERICAN SOCIETY FOR TESTING AND MATERIALS (ASTM)

ASTM A 53	(1989a) Pipe, Steel, Black and Hot-Dipped, Zinc-Coated, Welded and Seamless
ASTM B 32	(1989) Solder Metal
ASTM B 43	(1988) Seamless Red Brass Pipe, Standard Sizes
ASTM B 88	(1989) Seamless Copper Water Tube
ASTM D 1785	(1989) Poly(Vinyl Chloride) (PVC) Plastic Pipe, Schedules 40, 80, and 120
ASTM D 2241	(1989) Poly(Vinyl Chloride) (PVC) Pressure-Rated Pipe (SDR Series)
ASTM D 2287	(1981; R 1988) Nonrigid Vinyl Chloride Polymer and Copolymer Molding and Extrusion Compounds
ASTM D 2464	(1989) Threaded Poly(Vinyl Chloride) (PVC) Plastic Pipe Fittings, Schedule 80
ASTM D 2466	(1989) Poly(Vinyl Chloride) (PVC) Plastic Pipe Fittings, Schedule 40
ASTM D 2564	(1988) Solvent Cements for (Poly Vinyl

	Chloride) (PVC) Plastic Pipe and Fittings
ASTM D 2774	(1972; R 1983) Underground Installation of Thermostatic Pressure Piping
ASTM D 2855	(1983) Making Solvent-Cemented Joints with Poly(Vinyl Chloride) (PVC) Pipe and Fittings
ASTM D 3261	(1988a) Butt Heat Fusion Polyethylene (PE) Plastic Fittings for Polyethylene (PE) Plastic Pipe and Tubing
ASTM F 441	(1989) Chlorinated Poly(Vinyl Chloride) (CPVC) Plastic Pipe, Schedules 40 and 80

AMERICAN SOCIETY OF MECHANICAL ENGINEERS (ASME)

ASME A112.26.1M	(1984) Water Hammer Arresters
ASME B1.2	(1983) Gages and Gaging for Unified Inch Screw Threads
ASME B16.3	(1985) Malleable Iron Threaded Fittings, Classes 150 and 300
ASME B16.15	(1985) Cast Bronze Threaded Fittings, Classes 125 and 250
ASME B16.18	(1984) Cast Copper Alloy Solder Joint Pressure Fittings
ASME B16.22	(1989) Wrought Copper and Copper Alloy Solder Joint Pressure Fittings
ASME B40.1	(1985) Gauges - Pressure Indicating Dial Type - Elastic Element

AMERICAN SOCIETY OF SANITARY ENGINEERING (ASSE)

ASSE 1012	(Sept. 1978) Backflow Preventers with Intermediate Atmospheric Vent
ASSE 1013	(April 1988) Reduced Pressure Principle Backflow Preventers
ASSE 1020	(Feb. 1989) Pressure Vacuum Breaker, Assembly (Recommended for Outdoor Usage)

AMERICAN WATER WORKS ASSOCIATION (AWWA)

AWWA C509	(1987) Resilient-Seated Gate Valves, 3 through 12 NPS, for Water and Sewerage Systems
AWWA C901	(1988; Errata) Polyethylene (PE) Pressure Pipe and Tubing, 1/2 in. Through 3 in., for Water Service

FEDERAL SPECIFICATIONS (FS)

FS 0-F-506	(Rev C) Flux, Soldering; Paste and Liquid
FS WW-H-001220	(Basic) Head, Sprinkler, (Underground Connected)
FS WW-S-610	(Rev B; Am 1) Sprinkler, Lawn, (Surface Connected)

FOUNDATION FOR CROSS-CONNECTION CONTROL AND HYDRAULIC RESEARCH (FCCHR)

FCCHR-01	(June 1988; 8th Ed) Manual of Cross-Connection Control

MANUFACTURERS STANDARDIZATION SOCIETY OF THE VALVE AND FITTINGS INDUSTRY (MSS)

MSS SP-80	(1987) Bronze Gate, Globe, Angle and Check Valves
MSS SP-85	(1985) Cast Iron Globe and Angle Valves - Flanged and Threaded Ends

NATIONAL ELECTRICAL MANUFACTURERS ASSOCIATION (NEMA)

NEMA ICS 2	(1988; Rev 1) Industrial Control Devices, Controllers and Assemblies
NEMA ICS 6	(1988; Rev 1) Enclosures for Industrial Control and Systems

NATIONAL FIRE PROTECTION ASSOCIATION (NFPA)

NFPA 70	(1990) National Electrical Code

1.3 PERFORMANCE REQUIREMENTS

System shall operate with a minimum water pressure of 50 pounds per square inch (psi) at connection to main.

1.4 SUBMITTALS

Government approval is required for submittals with a "GA" designation; submittals having an "FIO" designation are for information only. The following shall be submitted in accordance with Section 01330 SUBMITTAL DESCRIPTIONS:

SD-01 Data

Design Analysis and Calculations; GA.

Design analyses and pressure calculations verifying that system will provide the irrigation requirements.

Spare Parts; GA.

Spare parts data for each different item of material and equipment

specified, after approval of the related submittals and not later than the start of the field tests. The data shall include a complete list of parts and supplies, with current unit prices and source of supply.

SD-04 Drawings

Sprinkler System; GA.

Detail drawings showing all irrigation work including valves, sprinkler heads, backflow preventers, automatic controllers, emitter heads, lateral and mainlines. Drawing shall include legends and a complete list of equipment and materials, and manufacturer's descriptive and technical literature, performance charts and curves, catalog cuts, and installation instructions. Drawings shall also contain complete wiring and schematic diagrams and any other details required to demonstrate that the system has been coordinated and will function as a unit. Drawings shall show proposed system layout, type and number of heads and emitters, zone valves, drain pockets, backflow devices, controllers, and mounting details of controllers.

As-built Drawings which provide current factual information after construction showing locations of mains, heads, valves, and controllers including deviations from and amendments to the drawings and changes in the work shall be included.

SD-09 Reports

Field Tests; GA.

Performance test reports in booklet form showing all field tests performed to adjust each component and all field tests performed to prove compliance with the specified performance criteria, upon completion and testing of the installed system. Each test report shall indicate the final position of control valves.

Operations & Maintenance Manuals; GA.

Six copies of operations and six copies of maintenance manuals for the equipment furnished. One complete set prior to field testing and the remainder upon acceptance. Manuals shall be approved prior to the field training course. Operating manuals shall detail the step-by-step procedures required for system startup, operation, and shutdown. Operating manuals shall include the manufacturer's name, model number, parts list, and brief description of all equipment and their basic operating features. Maintenance manuals shall list routine maintenance procedures, possible breakdowns and repairs, and troubleshooting guides. Maintenance manuals shall include piping and equipment layout, simplified wiring and control diagrams of the system as installed, and system programming schedule.

SD-13 Certificates

Sprinkler System; GA.

The material supplier's or equipment manufacturer's statement that the supplied material or equipment meets specified requirements. Each certificate shall be signed by an official authorized to certify in behalf of material supplier or product manufacturer and shall identify quantity and date or dates of shipment or delivery to which the certificates apply.

1.5 DELIVERY AND STORAGE

All equipment delivered and placed in storage shall be protected from the weather; excessive humidity and temperature variation; direct sunlight (in the case of plastic or rubber materials); and dirt, dust, or other contaminants.

1.6 FIELD MEASUREMENTS

The Contractor shall verify all dimensions in the field and shall advise the Contracting Officer of any discrepancy before performing the work.

1.7 UNIT PRICES

1.7.1 Measurement

1.7.1.1 Irrigation Pipe

The amount paid will be for completion of irrigation supply lines and all associated equipment, all trenching, main line installation, and reduced pressure backflow preventer installation, shall be the linear foot of irrigation line preoperly placed and accepted.

1.7.1.2 Sprinkler Heads

The amount paid will be for the number of sprinkler heads, backfilled, inspected and approved as accepted work. Sprinkler heads shall measured per each head.

1.7.1.3 Post Irrigation Installation Testing, Field Training & Clean-up

The amount paid will be for completion of all irrigation field tests, all associated documentation, in-field training, clean-up, inspected and approved as accepted work. This work shall be considered as part of the line item prices for the controller, sprinkler head, and irrigation pipe installation.

1.7.2 Payment

Quantities specified above will be paid at respective contract unit prices for the base year Line Items: 0027AA, "IRRIGATION PIPE"; 0027AD through 0027AI, "SPRINKLER HEADS"; and 0027AJ, "CONTROLLERS" of the Pricing Schedule. Payment shall constitute full compensation for completion of each item listed under paragraph 1.7.1 Measurement; for furnishing all materials, equipment, plant, and tools; and for labor and other incidentals necessary to complete work required.

PART 2 PRODUCTS

2.1 GENERAL MATERIALS AND EQUIPMENT REQUIREMENTS

2.1.1 Standard Products

Materials and equipment shall be the standard products of a manufacturer who has produced similar systems which have performed well for a minimum period of 2 years prior to bid opening. Equipment shall be supported by a service organization that is, in the opinion of the Contracting Officer, reasonably convenient to the site.

2.1.2 Nameplates

Each item of equipment shall have the manufacturer's name, address, type or style, model or serial number, and catalog number on a plate secured to the item of equipment.

2.1.3 Extra Stock

The following extra stock shall be provided: Ten heads of each size and type, two valve keys for operating manual valves, two wrenches for removing and installing each type of head, two quick coupler keys and hose swivels, and four irrigation controller housing keys.

2.2 PIPING MATERIALS

2.2.1 Copper Tubing and Associated Fittings

2.2.1.1 Tubing

Tubing shall conform to requirements of ASTM B 88, Type K.

2.2.1.2 Fittings

Fittings shall conform to ASME B16.22 and ASME B16.18, solder joint. Solder shall conform to ASTM B 32 95-5 tin-antimony. Flux shall conform to FS 0-F-506, Type I.

2.2.2 Red Brass Pipe and Associated Fittings

2.2.2.1 Pipe

Pipe shall conform to requirements of ASTM B 43, regular.

2.2.2.2 Fittings

Fittings shall be Class 250, cast bronze threaded conforming to the requirements of ASME B16.15.

2.2.3 Galvanized Steel Pipe and Associated Fittings

2.2.3.1 Pipe

Pipe shall conform to requirements of ASTM A 53, Schedule 40.

2.2.3.2 Fittings

Fittings shall be Class 150 conforming to requirements of ASME B16.3.

2.2.4 Polyvinyl Chloride (PVC) Pipe, Fittings, Solvent Cement, and Risers

2.2.4.1 Pipe

Pipe shall conform to the requirements of ASTM D 1785, PVC 1120 Schedule 40; and ASTM D 2241, PVC 1120 SDR 21, Class 200.

2.2.4.2 Fittings

Solvent welded socket type fittings shall conform to requirements of ASTM D 2466, Schedule 40. Threaded type fittings shall conform to requirements of ASTM D 2464, Schedule 80.

2.2.4.3 Solvent Cement

Solvent cement shall conform to the requirements of ASTM D 2564.

2.2.4.4 Risers

Risers shall be schedule 80 PVC threaded at both ends and shall conform to ASTM D 2241.

2.2.5 Polyethylene (PE) Plastic Piping

Pipe shall conform to AWWA C901, outside diameter base with dimension ratio (DR) of 9.3 to provide 150 psi minimum pressure rating.

2.2.5.1 Distribution Tubing

Distribution tubing shall be linear low density polyethylene tubing. It shall have a nominal reference of 1/4 inch, outside diameter of .350 inch, inside diameter of .250 inch, and a average wall thickness of .050 inch. Tubing shall be vinyl plastic extruded from non-rigid chloride, integrally algae-resistant, homogeneous throughout, smooth inside and outside, free from foreign materials, cracks, serrations, blisters and other effects.

2.2.5.2 Fittings

Fittings shall conform to ASTM D 3261, DR of 9.3.

2.2.6 Dielectric Fittings

Fittings shall conform to ASTM F 441, Schedule 80, CPVC threaded pipe nipples, 4-inch minimum length.

2.3 HEADS

2.3.1 Multi-Outlet Emitters

Multi-outlet emitter heads shall be self-cleaning, pressure compensating diaphragm with six self-piercing barbed outlets; each capable of emitting 2 gallons per hour flow. Emitter body shall be ultraviolet stabilized, algae, and heat resistant plastic construction.

2.3.2 Rotary Pop-Up Sprinklers

Sprinklers shall be gear driven with adjustable and full circle arc models. Sprinklers shall be capable providing various radius coverages at low precipitation rates. Pop-up head design shall be 3-3/4" pop up with adjustable radius capabilities. Construction shall be of high impact molded plastic with filter screen, drain check valve, and come with multiple nozzles.

2.3.3 Bubblers

Bubblers shall be fully adjustable flow with operation over a wide range of pressures. Heads to be of molded plastic and stainless steel construction.

2.4 VALVES

2.4.1 Gate Valves, Less than 3 Inches

Gate valves shall conform to the requirements of MSS SP-80, Type 1, Class 150, threaded ends.

2.4.2 Gate Valves, 3 Inches and Larger

Gate valves shall conform to the requirements of AWWA C509 and have encapsulated resilient wedge, parallel seats, non-rising stems, and open by counterclockwise turning. End connections shall be flanged. Interior construction of valves shall be bronze including stem containing a maximum 2 percent aluminum and maximum 16 percent zinc.

2.4.3 Quick Coupling Valves

Quick coupling valves shall have brass parts and shall be two-piece unit consisting of a coupler water seal valve assembly and a removable upper body to allow spring and key track to be serviced without shutdown of main. Lids shall be lockable vinyl with spring for positive closure on key removal.

2.4.4 Remote Control Valves, Electrical

Remote control valves shall be solenoid actuated globe valves of 3/4- to 3-inch size, suitable for 24 volts, 60/50 cycle, and designed to provide for shut-off in event of power failure. Valve shall be cast bronze or brass or plastic housing suitable for service at 150 psi operating pressure with external flow control adjustment for shut-off capability, external plug at diaphragm chamber to enable manual operation, filter in control chamber to prevent valve body clogging with debris, durable diaphragm, and accessibility to internal parts without removing valve from system.

2.4.5 Automatic Drain Valves

Automatic valves shall be brass or plastic, spring loaded ball drip type, 150 pounds and threaded ends, designed to close at 6-foot pressure head with positive seal at 3 psi pressure or greater and be open to drain at less than 3 psi pressure.

2.4.6 Reduced Pressure Backflow Preventer Assembly

Reduced pressure backflow preventer assemblies shall be tested, approved, and listed in accordance with FCCHR-01. Reduced pressure backflow preventers shall be in accordance with ASSE 1013. Backflow preventers shall be 150-pound flanged bronze mounted gate valve and strainer, stainless steel or bronze internal parts. Total pressure drop through complete assembly shall be a maximum of 10 psi at rated flow. Piping shall be galvanized steel pipe and fittings. Strainers shall be bronze or brass construction with gasket caps. Units shall have 200-mesh stainless steel screen elements.

2.5 ACCESSORIES AND APPURTENANCES

2.5.1 Valve and Emitter Boxes

Valve and emitter boxes shall be cast iron, plastic lockable, or precast concrete. Box sizes shall be adjustable for valve or emitter used. Cast iron box shall have bituminous coating. Boxes shall be sized as required to provide for easy access. The following inscription shall be burnt or

permanently marked into the appropriate boxes lid:

Type of Box	Inscription
Drip valve assembly box	"Valve"
Quick coupling valve box	"QC"
Gate valve box	"GV"
Automatic drain valve box	"DV"
Emitter box	"Emitter"

2.5.2 Pressure Gauges

Pressure gauges shall conform to requirements of ASME B40.1, single style pressure gauge for water with 4-1/2-inch dial brass or aluminum case, bronze tube, gauge cock, pressure snubber, and siphon. Scale range shall be suitable for irrigation sprinkler systems.

2.5.3 Service Clamps

Service clamps shall be bronze flat, double strap, with neoprene gasket or "O"-ring seal.

2.5.4 Water Hammer Arresters

Water hammer arrester shall conform to the requirements of ASME A112.26.1M; stainless steel construction with an encased and sealed bellows compression chamber.

2.5.5 Drip Valve Assembly Accessories

2.5.5.1 Wye Strainer

Strainer shall be provided at inlet to each drip line. Strainer shall have stainless steel screen having equivalent of 140-mesh filtration capacity and incorporate flush valves within strainer to clean screen without disassembling unit.

2.5.5.2 Pressure Regulator

Pressure regulator shall be constructed of heat-resistant plastic and be provided with each remote control valve. The pre-set outlet pressure shall be 25 psi. Pressure regulator shall have a 3/4" female threaded inlet and outlet.

2.5.5.3 Riser Adapters

Riser adapters shall be provided with a rigid piping system.

2.5.5.4 Tubing Stakes

Tubing stakes shall be plastic coated steel, or other non-corrosive strong material to secure tubing.

2.5.5.5 Emitter Outlet Check Valve (Insect Cap

Check valves shall be provided at end of each emitter outlet distribution line. Caps shall permit free flow of water with minimum restriction; prevent back siphoning, entry of insects, and contamination into outlet

ports.

2.5.5.6 Closure Caps

Closure caps shall be in accordance with manufacturer's recommendations.

2.6 AUTOMATIC CONTROLLERS, ELECTRICAL

Controller shall conform to the requirements of NEMA ICS 2 with 120-volt single phase service, operating with indicated stations, and grounded chassis. Enclosure shall conform to NEMA ICS 6 Type 3R, with locking hinged cover, wall-mounted. Controller shall be programmed for various schedules by setting switches and dials equipped with the following features: A switch for each day of week for two schedules, allowing each station to be scheduled individually as to days of watering; a minute switch for each station with a positive increment range of 0-99 minutes or 0-9.9 hours, set time within one percent; a switch allowing selected schedules to be repeated after each completion of initial watering schedule and allowing each operation to be scheduled throughout a 24-hour day; a circuit breaker for surge protection; and circuit for a 9-volt rechargeable NiCad battery.

2.7 ELECTRICAL WORK

Wiring and rigid conduit for electrical power shall be in accordance with NFPA 70, and Section 16375, ELECTRICAL DISTRIBUTION SYSTEM, UNDERGROUND.

2.8 CONCRETE MATERIALS

Concrete shall have a compressive strength of 2500 psi at 28 days as specified in Section 03300, CONCRETE FOR BUILDING CONSTRUCTION.

2.9 WATER SUPPLY MAIN MATERIALS

Tapping sleeves, service cut off valves, and connections to water supply mains shall be in accordance with Section 02660, WATER LINES.

2.10 INSULATING JOINTS

Insulating joints and dielectric fittings shall be in accordance with Section 02660, WATER LINES.

2.11 PEA GRAVEL

Pea gravel shall be approximately 3/8" in size and shall be washed smooth gravel clean of dirt and debris.

PART 3 EXECUTION

3.1 INSTALLATION

Sprinkler system shall be installed after site grading has been completed. Excavation, trenching, and backfilling for sprinkler system shall be in accordance with the applicable provisions of Section 02222, EXCAVATION, TRENCHING, AND BACKFILLING FOR UTILITIES SYSTEMS, except as modified herein. Provide a 3/4" valve and capped line to shade structure for future misting system installation.

3.1.1 Trenching

Backfill shall be hand tamped over excavation. When rock is encountered, trench shall be excavated 4 inches deeper and backfilled with silty sand (SM) or well-graded sand (SW) to pipe grade. Trenches shall be kept free of obstructions and debris that would damage pipe. Subsoil shall not be mixed with topsoil. Existing concrete walks, drives and other obstacles shall be bored at a depth conforming to bottom of adjacent trenches. Pipe sleeves for bored pipe shall be two pipe diameters larger than irrigation pipe.

3.1.1.1 Underground Utility and Communications

Before start of trenching, the Contractor shall mark all known underground utility and communication line locations as shown on drawings. Work crews shall note these locations and care shall be taken when working in their vicinity.

3.1.2 Piping System

3.1.2.1 Cover

Underground piping shall be installed as to meet the minimum depth of backfill cover specified on plans.

3.1.2.2 Clearances

Minimum horizontal clearances between lines shall be 4 inches for pipe 2 inches and less; 12 inches for 2-1/2 inches and larger. Minimum vertical clearances between lines shall be 1 inch for lateral lines. Do not place lateral lines directly over main line.

3.1.2.3 Minimum Slope

Minimum slope shall be 6 inches per 100 feet in direction of drain valves.

3.1.3 Piping Installation

3.1.3.1 Polyvinyl Chloride (PVC) Pipe

a. Solvent-cemented joints shall conform to the requirements of ASTM D 2855.

b. Threaded joints shall be full cut with a maximum of three threads remaining exposed on pipe and nipples. Threaded joints shall be made tight without recourse to wicks or fillers, other than polytetrafluoroethylene thread tape.

c. Piping shall be joined to conform with requirements of ASTM D 2774 or ASTM D 2855, and pipe manufacturer's instructions. Pipe shall be installed in a serpentine (snaked) manner to allow for expansion and contraction in trench before backfilling. Pipes shall be installed at temperatures over 40 degrees F.

3.1.3.2 Soldered Copper Tubing

Pipe shall be reamed and burrs removed. Contact surfaces of joint shall be cleaned and polished. Flux shall be applied to male and female ends. End of tube shall be inserted into fittings full depth of socket. After soldering, a solder bead shall show continuously around entire joint

circumference. Excess acid flux shall be removed from tubings and fittings.

3.1.3.3 Threaded Brass or Galvanized Steel Pipe

Prior to installation, pipe shall be reamed. Threads shall be cut in conformance with ASME B1.2. Pipe joint compound shall be applied to male end only.

3.1.3.4 Insulating Joints

Insulating and dielectric fittings shall be provided where pipes of dissimilar metal are joined and at connections to water supply mains as shown. Installation shall be in accordance with Section 02660, WATER LINES.

3.1.4 Valves

3.1.4.1 Remote Control Valves, Electrical

Remote control valves shall be pressure regulating, self-cleaning, solenoid actuated globe valves of 3/4 to 2-1/2 inch size, suitable for 24 volts, 60/50 cycle, and designed to provide for shut-off in event of power failure. Valve shall a be glass filled nylon or plastic housing suitable for service at 150 psi. operating pressure with external flow control adjustment for shut-off capability, external plug at diaphragm chamber to enable manual operation, filter in control chamber to prevent valve body clogging with debris, durable diaphragm, and accessibility to internal parts without removing valve from system.

3.1.4.2 Drip Valve Assembly

With each automatic valve, provide and assemble a wye strainer and a pressure regulator as shown on drawings. Valve assembly shall be set plumb in a valve box extending from grade to below valve body, with minimum of 4-inch cover measured from grade to top of valve.

3.1.4.3 Drain Valves

Entire system shall be manually or automatically drainable. Low points of system shall be equipped with drain valve draining into an excavation containing 1 cubic foot pea gravel. Pea gravel shall be covered with weed fabric then backfilled with excavated material and covered with surface mulch as designated on drawings.

3.1.5 Quick Coupling Valves

Quick coupling valves in valve boxes shall be installed plumb and level with terrain.

3.1.6 Installation of Drip Irrigation System

3.1.6.1 Distribution Tubing

Distribution tubing shall be connected to multi-outlet emitter and shall extend below ground to the plant as shown on the drawings. Tubing shall surface above subgrade at the plant and shall be placed below the mulch material. Install an insect cap at the end of each distribution tubing. When cutting tubing, shearing tools such as a pipe cutter, knife, or shears shall be used. Manufacturer's recommended tool and procedures when punching hose for emitters shall be followed.

3.1.6.2 Multi-Outlet Emitters

Emitters shall be installed in a plastic emitter box. Emitter on a rigid PVC nipple shall be connected to PVC drip lateral with a tee or elbow. Tubing shall be attached to barbed fitting and daylight distribution tubing at root ball secured with stake, with bug cap at end of secured distribution tubing. After installing emitters and before operating system, end of drip lateral shall be opened and flushed clean. The number of emitters on a line shall not exceed manufacturer's recommendations for that hose or distribution tubing size and length. All orifices of the multi-outlet emitters that have been opened but are unused shall be installed with a closure cap.

3.1.6.3 Tubing Stakes

Distribution tubing shall be secured with stakes where line is above ground. Stakes shall be spaced to ensure that tubing does not shift location in presence of foot traffic, operations, gravity on slope installations, or environmental effects. Discharge of the emitter distribution tubing shall be staked to ensure that discharge point of emitter will be maintained at specified position in relation to plant material to be irrigated.

3.1.7 Turf Heads

Install pop up heads to provide 100% coverage of all turf areas. Install as per detail. Adjust radius and arcs where appropriate.

3.1.8 Reduced Pressure Backflow Preventer Assembly

Reduced pressure backflow preventer assembly shall be installed in new connection to existing water distribution system, between connection and control valves. Reduced pressure type shall be installed as follows: Flush pipe lines prior to installing device and protect device by a strainer located upstream. Device shall not be installed in pits or where any part of device could become submerged in standing water. Locate in shrub beds only.

3.1.8.1 Insulation

All exposed piping and fittings shall be wrapped neatly with 1/2 inch minimum thickness of insulation tape or manufactured freeze protection blanket.

3.1.9 Control Wire and Conduit

3.1.9.1 Wires

Low voltage wires may be buried beside pipe in same trench. Rigid conduit shall be provided where wires run under paving. Wires shall be number tagged at key locations along main to facilitate service. One control circuit shall be provided for each zone and a circuit to control irrigation system.

3.1.9.2 Loops

A 12-inch loop of wire shall be provided at each valve where controls are connected.

3.1.9.3 Expansion and Contraction

Multiple tubes or wires shall be bundled and taped together at 10-foot intervals with 12-inch loop for expansion and contraction.

3.1.9.4 Splices

Electrical splices shall be waterproof.

3.1.10 Automatic Controllers

Controllers shall be wall mounted to building wall, 48 inches above finish grade. See drawings for automatic controller location. Coordinate the electrical service to these locations. Install in accordance with manufacturer's recommendations and NFPA 70.

3.1.11 Thrust Blocks

Concrete shall be placed so that sides subject to thrust or load are against undisturbed earth, and valves and fittings are serviceable after concrete has set. Thrust blocks shall be as specified in Section 02660, WATER LINES.

3.1.12 Backfill (Minimum Cover)

Depth of cover shall be 12 inches for non-pressure lateral pipe; 24 inches for pressure mainline pipes and for pipes under traffic loads, farm operations, and freezing temperatures; and 24 inches for low-voltage wires. Remainder of trench or pipe cover shall be filled to within 2 inches of top with excavated soil, and compact soil with plate hand-held compactors to same density as undisturbed adjacent soil. Surface shall be covered with mulch as specified.

3.1.13 Disinfection

Irrigation system fed from a potable water system shall be disinfected upstream of backflow preventer in accordance with Section 02660, WATER LINES.

3.1.14 Cleaning of Piping

Prior to the hydrostatic and operation tests, the interior of the pipe shall be flushed with clean water until pipe is free of all foreign materials. Flushing and cleaning out of system pipe, valves, and components shall not be considered completed until witnessed and accepted by Contracting Officer.

3.2 FIELD TESTS

All instruments, equipment, facilities, and labor required to conduct the tests shall be provided by Contractor.

3.2.1 Hydrostatic Pressure Test

Piping shall be tested hydrostatically before backfilling and proved tight at a hydrostatic pressure of 150 psi without pumping for a period of one hour with an allowable pressure drop of 5 psi. If hydrostatic pressure cannot be held for a minimum of 4 hours, Contractor shall make adjustments

or replacements and the tests repeated until satisfactory results are achieved and accepted by the Contracting Officer.

3.2.2 Leakage Tests

Leakage tests for service main shall be in accordance with Section 02660, WATER LINES.

3.2.3 Operation Test

At conclusion of pressure test, emitter heads, quick coupling assemblies, and hose valves shall be installed and entire system tested for operation under normal operating pressure. Operation test consists of the system operating through at least one complete programmed cycle for all areas to be irrigated.

3.3 POSTING FRAMED INSTRUCTIONS

Framed instructions containing wiring and control diagrams under glass or in laminated plastic shall be posted where directed. Condensed operating instructions, prepared in typed form, shall be framed as specified above and posted beside the diagrams. The framed instructions shall be posted before acceptance testing of the system. After as-built drawings are approved by Contracting Officer, controller charts and programming schedule shall be prepared. One chart for each controller shall be supplied. Chart shall be a reduced drawing of actual as-built system that will fit the maximum dimensions inside controller housing. Black line print for chart and a different pastel or transparent color shall indicate each station area of coverage. After chart is completed and approved for final acceptance, chart shall be sealed between two 20-mil pieces of clear plastic.

3.4 FIELD TRAINING

A field training course shall be provided for designated operating and maintenance staff members. Training shall be provided for a total period of 2 hours of normal working time and shall start after the system is functionally complete but prior to final acceptance tests. Field training shall cover all of the items contained in the operating and maintenance manuals.

3.5 CLEAN-UP

Upon completion of installation of system, all debris and surplus materials resulting from the work shall be removed.

3.6 WATER PROGRAM

3.6.1 Irrigation Program

The Contractor shall develop an irrigation program based on local evapotranspiration calculations, soil type, hydrozone, and plant establishment needs. The program shall provide watering rates and times for all valve circuits and provide a complete table of recommended seasonal irrigation times. Submit irrigation program along with the required As-builts to the Contracting Officer at the end of the maintenance period.

3.6.2 Irrigation Program Adjustment

Upon completion of planting, the Contractor shall commence automatic irrigation of the plantings. Adjust and fine tune all parts of the irrigation system carefully to meet water needs and requirements for each plant and hydrozone.

3.7 MAINTENANCE

See Section 02950, PLANTING AND LANDSCAPING, 3.11 for required maintenance and period.

-- End of Section --

SECTION TABLE OF CONTENTS

DIVISION 02 - SITE WORK

SECTION 02831

CHAIN LINK FENCE

PART 1 GENERAL

1.1 REFERENCES
1.2 MEASUREMENT AND PAYMENT

PART 2 PRODUCTS

2.1 MATERIALS
2.1.1 Chain Link Fence Fabric
2.1.2 Gates
2.1.3 Posts
2.1.4 Braces
2.1.5 Tension Wire
2.1.6 Accessories
2.1.7 Concrete
2.1.8 Padlocks

PART 3 EXECUTION

3.1 GENERAL
3.2 EXCAVATION
3.3 POSTS
3.4 RAILS
3.5 BRACES AND TRUSS RODS
3.6 TENSION WIRES
3.7 CHAIN LINK FABRIC
3.8 BARBED WIRE SUPPORTING ARMS AND BARBED WIRE
3.9 GATES
3.10 GROUNDING

-- End of Section Table of Contents --

SECTION 02831

CHAIN LINK FENCE

PART 1 GENERAL

1.1 REFERENCES

The publications listed below form a part of this specification to the extent referenced. The publications are referred to in the text by basic designation only.

AMERICAN SOCIETY FOR TESTING AND MATERIALS (ASTM)

ASTM A 392	(1991b) Zinc-Coated Chain-Link Fence Fabric
ASTM A 491	(1994) Aluminum-Coated Steel Chain-Link Fence Fabric

1.2 MEASUREMENT AND PAYMENT

The length of chain link fence installed will be measured along centerline of fence. Fence will be paid for at the contract unit price for the number of linear feet demolished and installed in the accepted work. Compensation shall be for the base year Line Items the Heading 0020, "FENCE" of the Pricing Schedule.

PART 2 PRODUCTS

2.1 MATERIALS

Materials shall conform to the following:

2.1.1 Chain Link Fence Fabric

ASTM A 392, Class 1, zinc-coated steel wire with minimum coating weight of 1.2 ounces of zinc per square foot of coated surface, or ASTM A 491, Type I, aluminum-coated steel wire. Fabric shall be fabricated of 9 gauge wire woven in 2 inch mesh. Fabric height shall be 6 feet. Fabric shall be twisted and barbed on the top selvage and knuckled on the bottom selvage.

2.1.2 Gates

ASTM F 900 and/or ASTM F 1184. Gate shall be the type and swing shown. Gate frames shall conform to strength and coating requirements of ASTM F 1083 for Group IA, steel pipe, with external coating Type A, nominal pipe size (NPS) 1-1/2. Gate frames shall conform to strength and coating requirements of ASTM F 1043, for Group IC, steel pipe with external coating Type A or Type B, pipe size (NPS) 1-1/2. Gate fabric shall be as specified for chain-link fabric. [Each end member of gate frames shall be extended sufficiently above the top member to carry three strands of

barbed wire in horizontal alignment with barbed wire strands on the fence.] Gate leaves more than 8 feet wide shall have either intermediate members and diagonal truss rods or shall have tubular members as necessary to provide rigid construction, free from sag or twist. Gate leaves less than 8 feet wide shall have truss rods or intermediate braces. Intermediate braces shall be provided on all gate frames with an electro-mechanical lock. Gate fabric shall be attached to the gate frame by method standard with the manufacturer except that welding will not be permitted. Latches, hinges, stops, keepers, rollers, and other hardware items shall be furnished as required for the operation of the gate. Latches shall be arranged for padlocking so that the padlock will be accessible from both sides of the gate. Stops shall be provided for holding the gates in the open position.

2.1.3 Posts

ASTM F 1083, zinc-coated. Group IA, with external coating Type A steel pipe. Group IC steel pipe, zinc-coated with external coating Type A or Type B and Group IIA, formed steel sections, shall meet the strength and coating requirements of ASTM F 1043. Group III, ASTM F 1043 steel H-section may be used for line posts in lieu of line post shapes specified for the other classes. Sizes shall be as shown on the drawings. Line posts and terminal (corner, gate, and pull) posts selected shall be of the same designation throughout the fence. Gate post shall be for the gate type specified subject to the limitation specified in ASTM F 900 and/or ASTM F 1184.

2.1.4 Braces

ASTM F 1083, zinc-coated, Group IA, steel pipe, size NPS 1-1/4. Group IC steel pipe, zinc-coated, shall meet the strength and coating requirements of ASTM F 1043. Group IIA, formed steel sections, size 1.66 inch, conforming to ASTM F 1043, may be used as braces if Group IIA line posts are furnished.

2.1.5 Tension Wire

Tension wire shall be Type I or Type II, Class 2 coating, in accordance with ASTM A 824.

2.1.6 Accessories

ASTM F 626. Ferrous accessories shall be zinc or aluminum coated. Truss rods shall be furnished for each terminal post. Truss rods shall be provided with turnbuckles or other equivalent provisions for adjustment. Barbed wire shall be 2 strand, 12-1/2 gauge wire, zinc-coated, Class 3 in accordance with ASTM A 121 or aluminum coated Type I in accordance with ASTM A 585. Barbed wire shall be four-point barbed type steel wire. Barbed wire support arms shall be the single arm type and of the design required for the post furnished. Tie wire for attaching fabric to rails, braces, and posts shall be 9 gauge steel wire and match the coating of the fence fabric. Miscellaneous hardware coatings shall conform to ASTM A 153 unless modified herein.

2.1.7 Concrete

ASTM C 94, using 3/4 inch maximum size aggregate, and having minimum compressive strength of 3000 psi at 28 days. Grout shall consist of one part portland cement to three parts clean, well-graded sand and the

minimum amount of water to produce a workable mix.

2.1.8 Padlocks

ASTM F 883, Type PO1, Grade 2, Size 1-3/4 inch. Padlocks shall be keyed alike and each lock shall be furnished with two keys.

PART 3 EXECUTION

3.1 GENERAL

Fence shall be installed to the lines and grades indicated. The area on either side of the fence line shall be cleared to the extent indicated. Line posts shall be spaced equidistant at intervals not exceeding 10 feet. Terminal (corner, gate, and pull) posts shall be set at abrupt changes in vertical and horizontal alignment. Fabric shall be continuous between terminal posts; however, runs between terminal posts shall not exceed 500 feet. Any damage to galvanized surfaces, including welding, shall be repaired with paint containing zinc dust in accordance with ASTM A 780.

3.2 EXCAVATION

Post holes shall be cleared of loose material. Waste material shall be spread where directed. The ground surface irregularities along the fence line shall be eliminated to the extent necessary to maintain a 2 inch clearance between the bottom of the fabric and finish grade.

3.3 POSTS

Posts shall be set plumb and in alignment. Except where solid rock is encountered, posts shall be set in concrete to the depth indicated on the drawings. Where solid rock is encountered with no overburden, posts shall be set to a minimum depth of 18 inches in rock. Where solid rock is covered with an overburden of soil or loose rock, posts shall be set to the minimum depth indicated on the drawing unless a penetration of 18 inches in solid rock is achieved before reaching the indicated depth, in which case depth of penetration shall terminate. All portions of posts set in rock shall be grouted. Portions of posts not set in rock shall be set in concrete from the rock to ground level. Posts set in concrete shall be set in holes not less than the diameter shown on the drawings. Diameters of holes in solid rock shall be at least 1 inch greater than the largest cross section of the post. Concrete and grout shall be thoroughly consolidated around each post, shall be free of voids and finished to form a dome. Concrete and grout shall be allowed to cure for 72 hours prior to attachment of any item to the posts. Class 3 line posts may be mechanically driven, for temporary fence construction only, if rock is not encountered. Driven posts shall be set to a minimum depth of 3 feet and shall be protected with drive caps when being set. Fence post rigidity shall be tested by applying a 50 pound force on the post, perpendicular to the fabric, at 5 feet above ground. Post movement measured at the point where the force is applied shall be less than or equal to 3/4 inch from the relaxed position. Every tenth post shall be tested for rigidity. When a post fails this test, further tests on the next four posts on either side of the failed post shall be made. All failed posts shall be removed, replaced, and retested at the Contractor's expense.

3.4 RAILS

3.5 BRACES AND TRUSS RODS

Braces and truss rods shall be installed as indicated and in conformance with the standard practice for the fence furnished. Horizontal (compression) braces and diagonal truss (tension) rods shall be installed on fences over 6 feet in height. A center brace or 2 diagonal truss rods shall be installed on 12 foot fences. Braces and truss rods shall extend from terminal posts to line posts. Diagonal braces shall form an angle of approximately 40 to 50 degrees with the horizontal. No bracing is required on fences 6 feet high or less if a top rail is installed.

3.6 TENSION WIRES

Tension wires shall be installed along the top and bottom of the fence line and attached to the terminal posts of each stretch of the fence. Top tension wires shall be installed within the top [1 foot] [4 inches] of the installed fabric. Bottom tension wire shall be installed within the bottom 6 inches of the installed fabric. Tension wire shall be pulled taut and shall be free of sag.

3.7 CHAIN LINK FABRIC

Chain link fabric shall be installed on the side of the post indicated. Fabric shall be attached to terminal posts with stretcher bars and tension bands. Bands shall be spaced at approximately 15 inch intervals. The fabric shall be installed and pulled taut to provide a smooth and uniform appearance free from sag, without permanently distorting the fabric diamond or reducing the fabric height. Fabric shall be fastened to line posts at approximately 15 inch intervals and fastened to all rails and tension wires at approximately 24 inch intervals. Fabric shall be cut by untwisting and removing pickets. Splicing shall be accomplished by weaving a single picket into the ends of the rolls to be joined. The bottom of the installed fabric shall be 2 inches (plus or minus 1/2 inch) above the ground. After the fabric installation is complete, the fabric shall be exercised by applying a 50 pound push-pull force at the center of the fabric between posts. The use of a 30 pound pull at the center of the panel shall cause fabric deflection of not more than 2.5 inches when pulling fabric from the post side of the fence. Every second fence panel shall meet this requirement. All failed panels shall be resecured and retested at the Contractor's expense.

3.8 BARBED WIRE SUPPORTING ARMS AND BARBED WIRE

Barbed wire supporting arms and barbed wire shall be installed as indicated and as recommended by the manufacturer. Supporting arms shall be anchored to the posts in a manner to prevent easy removal with hand tools. Supporting arms shall be anchored with 3/8 inch diameter plain pin rivets or, at the Contractor's option, with studs driven by low-velocity explosive-actuated tools for steel, wrought iron, ductile iron, or malleable iron. Studs driven by an explosive-actuated tool shall not be used with gray iron or other material that can be fractured. A minimum of two studs per support arm shall be used. Barbed wire shall be pulled taut and attached to the arms with clips or other means that will prevent easy removal.

3.9 GATES

Gates shall be installed at the locations shown. Hinged gates shall be

mounted to swing as indicated. Latches, stops, and keepers shall be installed as required. Padlocks shall be attached to gates or gate posts with chains. Hinge pins, and hardware shall be welded or otherwise secured to prevent removal.

3.10 GROUNDING

Fences shall be grounded on each side of all gates, at each corner, at the closest approach to each building located within 50 feet of the fence, and where the fence alignment changes more than 15 degrees. Grounding locations shall not exceed 650 feet. Each gate panel shall be bonded with a flexible bond strap to its gate post. Fences crossed by powerlines of 600 volts or more shall be grounded at or near the point of crossing and at distances not exceeding 150 feet on each side of crossing. Ground conductor shall consist of No. 8 AWG solid copper wire. Grounding electrodes shall be 3/4 inch by 10 foot long copper-clad steel rod. Electrodes shall be driven into the earth so that the top of the electrode is at least 6 inches below the grade. Where driving is impracticable, electrodes shall be buried a minimum of 12 inches deep and radially from the fence. The top of the electrode shall be not less than 2 feet or more than 8 feet from the fence. Ground conductor shall be clamped to the fence and electrodes with bronze grounding clamps to create electrical continuity between fence posts, fence fabric, and ground rods. After installation the total resistance of fence to ground shall not be greater than 25 ohms.

-- End of Section --

SECTION TABLE OF CONTENTS

DIVISION 02 - SITE WORK

SECTION 02840

VEHICLE BARRIERS

PART 1 GENERAL

1.1 REFERENCES
1.2 GENERAL REQUIREMENTS
1.3 MEASUREMENT AND PAYMENT
1.4 NAMEPLATES
1.5 SUBMITTALS
1.6 DELIVERY AND STORAGE
1.7 SPARE PARTS

PART 2 PRODUCTS

2.1 RETRACTABLE BARRIERS
2.1.1 Powered Retractable Barrier
2.1.1.1 Failure Modes of Operation
2.1.1.2 Electric Motors
2.1.1.3 System
2.1.1.4 Hydraulic Power Unit
2.1.1.5 Hydraulic Power Unit Enclosure
2.1.2 Manual Retractable Barriers
2.2 RETRACTABLE BOLLARDS
2.2.1 Powered Retractable Bollards
2.2.1.1 Failure Modes of Operation
2.2.1.2 Electric Motors
2.2.1.3 System
2.2.1.4 Hydraulic Power Unit
2.2.1.5 Hydraulic Power Unit Enclosure
2.2.2 Manual Retractable Bollards
2.3 CRASH GATE
2.3.1 Powered Crash Gate
2.3.1.1 Failure Mode of Operation
2.3.1.2 Hydraulic Power Unit
2.3.1.3 Hydraulic Power Unit Enclosure
2.3.2 Manual Crash Gate
2.4 CRASH BEAM
2.4.1 Powered Crash Beam
2.4.1.1 Failure Mode of Operation
2.4.1.2 Hydraulic Power Unit
2.4.1.3 Hydraulic Power Unit Enclosure
2.4.2 Manual Crash Beam
2.5 ELECTRICAL WORK
2.6 CONTROL PANEL
2.6.1 Voltage
2.6.2 Main Control Panel
2.6.3 Remote Control Panel
2.7 MISCELLANEOUS EQUIPMENT

2.7.1 Safety Equipment
2.7.2 Heater
2.7.3 Signage
2.7.4 Vertical Arm Gates (Traffic Arms)
2.8 FINISH
2.9 CONCRETE
2.10 WELDING
2.11 PAVEMENT

PART 3 EXECUTION

3.1 INSTALLATION
3.2 HYDRAULIC LINES
3.3 ELECTRICAL
3.4 FIELD TESTING
3.5 FIELD TRAINING

-- End of Section Table of Contents --

SECTION 02840

VEHICLE BARRIERS

PART 1 GENERAL

1.1 REFERENCES

The publications listed below form a part of this specification to the extent referenced. The publications are referred to in the text by basic designation only.

AMERICAN ASSOCIATION OF STATE HIGHWAY AND TRANSPORTATION OFFICIALS (AASHTO)

AASHTO HB-16	(1996) Standard Specifications for Highway Bridges

AMERICAN SOCIETY FOR TESTING AND MATERIALS (ASTM)

ASTM A 106	(1997) Seamless Carbon Steel Pipe for High-Temperature Service
ASTM D 3034	(1994) Type PSM Poly(Vinyl Chloride) (PVC) Sewer Pipe and Fittings

AMERICAN WELDING SOCIETY (AWS)

AWS D1.1	(1996) Structural Welding Code - Steel

FEDERAL HIGHWAY ADMINISTRATION (FHWA)

FHWA SA-89-006	(1988) Manual on Uniform Traffic Control Devices for Streets and Highways

NATIONAL ELECTRICAL MANUFACTURERS ASSOCIATION (NEMA)

NEMA 250	(1991) Enclosures for Electrical Equipment (1000 Volts Maximum)

SOCIETY OF AUTOMOTIVE ENGINEERS (SAE)

SAE J 517	(1996) Hydraulic Hose

1.2 GENERAL REQUIREMENTS

Barriers furnished shall in all respects be identical to the unit tested and certified except for the width of the vehicle barrier, which is as indicated, and except for bollards which have a set diameter. Crash test shall be performed and data compiled by an approved independent testing agency. Test vehicle shall not vault or penetrate the barrier during the test. The design and structural materials of the vehicle barrier furnished shall be the same as those used in the crash tested barrier.

1.3 MEASUREMENT AND PAYMENT

Measurement shall be for each particular type of barrier installed. There are no line items for this work in the Pricing Schedule; compensation for this work shall be at the negotiated unit price for each type of vehicle barrier.

1.4 NAMEPLATES

Nameplate data shall be permanently attached to each vehicle barrier. The data shall be legibly marked on corrosion-resistant metal plates and shall consist of at least the following:

a. Manufacturer's name.

b. Model number.

c. Serial number.

d. Date of manufacture.

1.5 SUBMITTALS

Government approval is required for submittals with a "GA" designation; submittals having an "FIO" designation are for information only. The following shall be submitted in accordance with Section 01330 SUBMITTAL PROCEDURES:

SD-01 Data

Vehicle Barriers;

A complete list of equipment, materials, including industrial standards used and how they apply to the applicable component and manufacturer's descriptive data and technical literature, catalog cuts, and installation instructions. Spare parts data for each different item of material and equipment used, after approval of the detail drawings. The data shall include a complete list of parts and supplies, with current unit prices and source of supply.

SD-04 Drawings

Vehicle Barriers; GA.

Detail drawings containing complete wiring and schematic diagrams, and any other details required to demonstrate that the system has been coordinated and will properly function as a unit. Drawings shall show proposed layout and anchorage of equipment and appurtenances, and equipment relationship to other parts of the work including foundation and clearances for maintenance and operation. Detail drawings shall include a copy of the crash test report or certificate of barrier performance.

SD-08 Statements

Vehicle Barriers;

Information necessary to document a minimum 1-year successful field operation performance history for each type of vehicle barrier installed.

SD-09 Reports

Field Testing;

Test reports in booklet form showing all field tests, including component adjustments and demonstration of compliance with the specified performance criteria, upon completion and testing of the installed system. Each test report shall indicate the final position of controls.

SD-19 Operation and Maintenance Manuals

Vehicle Barriers; GA.

Six copies of operation and maintenance manuals, a minimum of 2 weeks prior to field training. One complete set prior to performance testing and the remainder upon acceptance. Manuals shall be approved prior to acceptance. Operation manuals shall outline the step-by-step procedures required for system startup, operation, and shutdown. The manuals shall include the manufacturer's name, model number, service manual, parts list, and brief description of all equipment and their basic operating features. Maintenance manuals shall include routine maintenance procedures, possible breakdowns and repairs, and troubleshooting guide. The manuals shall include piping layout, equipment layout, and simplified wiring and control diagrams of the system as installed. The manuals shall also include hydraulic oil types to be used for ambient temperature ranges of minus 30 degrees F to 150 degrees F to cover winter operation, summer operation, and ambient temperature ranges in between.

1.6 DELIVERY AND STORAGE

Components placed in storage shall be protected from the weather, humidity, and temperature variation, dirt and dust, or other contaminants. Structural materials shall be stored on sleepers or pallets and shall be protected from rust and objectionable materials such as dirt, grease, or oil.

1.7 SPARE PARTS

A manufacturer's standard recommended spare parts package, with current unit prices and source of supply complete with detailed manuals on parts replacement, shall be provided with each barrier to facilitate 1 year of normal operation. Particular consideration shall be given to system components which are not readily available from local or commercial sources and which are critical to the operation of the system.

PART 2 PRODUCTS

2.1 RETRACTABLE BARRIERS

When in the raised position, the total retractable barrier heights shall be no less than 36 inches above the roadway surface. When in the lowered position, the retractable barrier shall extend no more than 5/8 inch above the roadway surface. Retractable barriers in the lowered position shall be capable of supporting a 32,000 poundaxle load or a 16,000 pound wheel load. Design for this load shall be in accordance with AASHTO HB-16.

2.1.1 Powered Retractable Barrier

The retractable barrier shall be capable of 360 complete up/down cycles per hour. The retractable barrier motion shall be instantly reversible and

shall be capable of raising the barrier from the lowered position to the raised position within 8 seconds during normal use, and within 2 seconds during an emergency. Also, the barrier shall be capable of being closed from the raised position to the lowered position in not more than 3 seconds. Retractable barrier shall withstand a 15,000 pound vehicle at impact speed of 50 miles per hour with maximum barrier deflection or vehicle penetration of 3 feet. Unsecured portable retractable barrier, when impacted by a 15,000 pound vehicle at impact speed of 50 miles per hour shall disable the vehicle and allow it to travel no more than 50 feet after impact. Portable power-assisted retractable barriers shall be equipped with on and off ramps for smooth transition between surfaces.

2.1.1.1 Failure Modes of Operation

The system shall be designed to prevent lowering of the barrier in the event of hydraulic, electrical, or mechanical failure. A manual pump shall be included for operation of hydraulic and/or mechanical barriers without power.

2.1.1.2 Electric Motors

Unless otherwise indicated, electric motors shall have enclosures.

2.1.1.3 System

The system shall be designed to maintain the barriers in the raised position, without inspection, for periods of time of up to 1 week. If a hydraulic system is used, it shall be equipped with pressure relief valves to prevent overpressure.

2.1.1.4 Hydraulic Power Unit

The hydraulic power unit shall contain biodegradable and non-toxic hydraulic fluid which maintains its viscosity between 96 and 1000 saybolt universal seconds (SUS) even at constant heaviest use rate, for an ambient temperature range of 20 to 150 degrees F. A hydraulic fluid heater shall be provided so that the viscosity remains between 96 and 1000 SUS for ambient temperatures below 20 degrees F. Buried hydraulic lines for the connection of the hydraulic power unit to the barrier shall be flexible and/or carbon steel pipe. Flexible and rigid hydraulic line working pressure shall exceed the maximum system relief pressure. PVC pipe and fittings for burial of hydraulic lines shall be in accordance with ASTM D 3034 Type PS 46 with minimum pipe stiffness of 46.

a. Flexible hydraulic lines shall be in accordance with SAE J 517.

b. Seamless carbon steel pipe shall be in accordance with ASTM A 106.

2.1.1.5 Hydraulic Power Unit Enclosure

A NEMA Type 3R enclosure as specified in NEMA 250 shall be provided to enclose the hydraulic power unit. The enclosure shall be designed for easy removal of the hydraulic power unit and other accessories without complete removal of the enclosure. An access door with hinges and an inside and outside operable door latch shall be provided. Equipment within the enclosure shall be placed and configured so that all periodic maintenance can be performed through the access door without removal of the equipment. The enclosure shall be equipped with weatherproof louver vents appropriately sized and located to dissipate internal heat generation.

2.1.2 Manual Retractable Barriers

The manual barrier shall be capable of being raised and lowered by manual means such as levers or hydraulics requiring a maximum 60 pounds of force. The manual mechanism shall contain a locking pin which accepts a padlock for securing the barrier when it is in the "UP" position. Retractable barrier shall withstand a 15,000 pound vehicle at impact speed of 50 miles per hour, with maximum barrier deflection or vehicle penetration of 10 feet.

2.2 RETRACTABLE BOLLARDS

The total bollard height when in the raised position shall be no less than 30 inches above the roadway surface and shall have an outside diameter of no less than 8 inches. A bollard system shall consist of a minimum of 3 bollards spaced no more than 32 inches from centerline to centerline of bollards across a 10 foot roadway. Bollards in the lowered position shall be capable of supporting a 16,000 pound wheel load each. Design for this load shall be in accordance with AASHTO HB-16. Retractable bollards shall withstand a 15,000 pound vehicle at impact speed of 50 miles per hour with maximum bollard deflection or vehicle penetration of 20 feet.

2.2.1 Powered Retractable Bollards

The retractable bollard shall be capable of 200 complete up/down cycles per hour. Bollards shall be capable of being raised or lowered within a 3 to 15-second range during normal use and within 2.5 seconds for emergency operations.

2.2.1.1 Failure Modes of Operation

The system shall be designed to prevent lowering of the barrier in the event of hydraulic, electrical, or mechanical failure. A manual pump shall be included for operation of hydraulic and/or mechanical barriers without power.

2.2.1.2 Electric Motors

Unless otherwise indicated, electric motors shall betotally enclosed.

2.2.1.3 System

The system shall be designed to maintain the barriers in the raised position, without inspection, for period of time of up to 1 week. If a hydraulic system is used, it shall be equipped with pressure relief valves to prevent overpressure.

2.2.1.4 Hydraulic Power Unit

The hydraulic power unit shall contain biodegradable and non-toxic hydraulic fluid which maintains its viscosity between 96 and 1000 saybolt universal seconds (SUS) even at constant heaviest use rate, for an ambient temperature range of 20 to 150 degrees F. A hydraulic fluid heater shall be provided so that the viscosity remains between 96 and 1000 SUS for ambient temperatures below 20 degrees F. Buried hydraulic lines for the connection of the hydraulic power unit to the barrier shall be flexible and/or carbon steel pipe. Flexible and rigid hydraulic line working pressure shall exceed the maximum system relief pressure. PVC pipe and

fittings for burial of hydraulic lines shall be in accordance with ASTM D 3034 Type PS 46 with minimum pipe stiffness of 46.

a. Flexible hydraulic lines shall be in accordance with SAE J 517.

b. Seamless carbon steel pipe shall be in accordance with ASTM A 106.

2.2.1.5 Hydraulic Power Unit Enclosure

A NEMA Type 3R enclosure as specified in NEMA 250 shall be provided to enclose the hydraulic power unit. The enclosure shall be designed for easy removal of the hydraulic power unit and other accessories without complete removal of the enclosure. An access door with hinges and an inside and outside operable door latch shall be provided. Equipment within the enclosure shall be placed and configured so that all periodic maintenance can be performed through the access door without removal of the equipment. The enclosure shall be equipped with weatherproof louver vents appropriately sized and located to dissipate internal heat generation.

2.2.2 Manual Retractable Bollards

Manual bollards shall be capable of being raised and lowered utilizing a recessed handle on the top surface of the bollard, with a maximum force of 60 pounds or a manual hydraulic pump requiring a maximum 60 pounds of force. A recessed panel at the base of each bollard, adjacent to the bollard in the "DOWN" position, shall contain a spring actuated latching mechanism that automatically secures the bollard in either the full "UP" or full "DOWN" position. The panel shall have an access cover with provisions for a padlock to secure the access cover.

2.3 CRASH GATE

The crash gate shall consist of steel buttresses anchored into the ground and an above grade assembly consisting of a heavy steel structural or a combination of heavy steel and structural aluminum capable of being opened and closed. The height of the gate shall be a minimum of 84 inches from the road surface to the top of the gate frame. The length shall close and protect a minimum 120 inches of clear opening. The maximum clear opening between the gate frame and end posts, between the bottom of the gate and finished grade, and between any grill work shall be 3 inches.

2.3.1 Powered Crash Gate

The gate movement shall be controlled by an electro-mechanical gate operator or a hydraulic gate operator consisting of an operator unit with required control circuits and operator station. The control and operating voltage shall be 24 vac (nominal). A remote control master station shall be capable of driving the gate at 100 fpm. Unless otherwise indicated, motors shall be totally enclosed. Crash gate shall withstand a 15,000 pound vehicle at impact speed of 50 mph per hour, with maximum barrier deflection or vehicle penetration of . 3 feet.

2.3.1.1 Failure Mode of Operation

The system shall be designed to prevent opening of the crash gate in the event of electrical or mechanical failure. A disconnect system for the gate drive shall be provided to allow manual operation of the barrier in the event of a power outage.

2.3.1.2 Hydraulic Power Unit

The hydraulic power unit shall contain biodegradable and nontoxic hydraulic fluid which maintains its viscosity between 96 and 1000 saybolt universal seconds (SUS) even at constant heaviest use rate, for an ambient temperature range of 20 to 150 degrees F. A hydraulic fluid heater shall be provided so that the viscosity remains between 96 and 1000 SUS for ambient temperatures below 20 degrees F. Buried hydraulic lines for the connection of the hydraulic power unit to the barrier shall be flexible and/or carbon steel pipe. Flexible and rigid hydraulic line working pressure shall exceed the maximum system relief pressure. PVC pipe and fittings for burial of hydraulic lines shall be in accordance with ASTM D 3034 Type PS 46 with minimum pipe stiffness of 46.

a. Flexible hydraulic lines shall be in accordance with SAE J 517.

b. Seamless carbon steel pipe shall be in accordance with ASTM A 106.

2.3.1.3 Hydraulic Power Unit Enclosure

A NEMA Type 3R enclosure as specified in NEMA 250 shall be provided to enclose the hydraulic power unit. The enclosure shall be designed for easy removal of the hydraulic power unit and other accessories without complete removal of the enclosure. An access door with hinges and an inside and outside operable door latch shall be provided. Equipment within the enclosure shall be placed and configured so that all periodic maintenance can performed through the access door without removal of the equipment. The enclosure shall be equipped with weatherproof louver vents appropriately sized and located to dissipate internal heat generation.

2.3.2 Manual Crash Gate

The manual crash gate shall be capable of being hinged from either side. Hinge points of both buttresses shall each contain a locking pin with padlock acceptance for securing the crash gate in the closed position. The crash gate shall withstand a 10,000 pound vehicle at impact speed of 50 miles per hour, with maximum gate deflection or vehicle penetration of 10 feet.

2.4 CRASH BEAM

The crash beam shall be an above-grade assembly that, in the "DOWN" position, shall present a formidable obstacle to approaching vehicles. The height of the barrier shall be a minimum of 30 inches as measured from the roadway surface to the centerline of the crash beam. The crash beam shall be capable of blocking a minimum road width of 120 inches. The crash beam end shall contain a locking pin with padlock acceptance for securing the crash beam when it is in the "DOWN" position. Crash beam shall withstand a 10,000 pound vehicle at impact speed of 15 miles per hour, with a maximum beam deflection of 20 feet.

2.4.1 Powered Crash Beam

The crash beam shall be operated by means of a hydraulic power system. The crash beam shall be capable of being raised or lowered within an 8 to 15 second time range.

2.4.1.1 Failure Mode of Operation

A disconnect system for the crash beam shall be provided to allow manual operation of the barrier in the event of an electrical or mechanical failure.

2.4.1.2 Hydraulic Power Unit

The hydraulic power unit shall contain biodegradable and nontoxic hydraulic fluid which maintains its viscosity between 96 and 1000 saybolt universal seconds (SUS) even at constant heaviest use rate, for an ambient temperature range of 20 to 150 degrees F. A hydraulic fluid heater shall be provided so that the viscosity remains between 96 and 1000 SUS for ambient temperatures below 20 degrees F. Buried hydraulic lines for the connection of the hydraulic power unit to the barrier shall be flexible and /or carbon steel pipe. Flexible and rigid hydraulic line working pressure shall exceed the maximum system relief pressure. PVC pipe and fittings for burial of hydraulic lines shall be in accordance with ASTM D 3034 Type PS 46 with minimum pipe stiffness of 46.

a. Flexible hydraulic lines shall be in accordance with SAE J 517.

b. Seamless carbon steel pipe shall be in accordance with ASTM A 106.

2.4.1.3 Hydraulic Power Unit Enclosure

A NEMA Type 3R enclosure as specified in NEMA 250 shall be provided to enclose the hydraulic power unit. The enclosure shall be designed for easy removal of the hydraulic power unit components and other accessories without complete removal of the enclosure. An access door with hinges and an inside and outside operable door latch shall be provided. Equipment within the enclosure shall be placed and configured so that all periodic maintenance can be performed through the access door without weatherproof louver vents appropriately sized and located to dissipate internal heat generation.

2.4.2 Manual Crash Beam

The crash beam shall be manually raised and lowered with the aid of a counterbalanced end requiring approximately 60 pounds of force.

2.5 ELECTRICAL WORK

Motors, manual or automatic motor control equipment except where installed in motor control centers and protective or signal devices required for the operation specified herein shall be provided in accordance with Section 16415 ELECTRICAL WORK, INTERIOR. Any wiring required for the operation specified herein, but not shown on the electrical plans, shall be provided under this section in accordance with Sections 16415 ELECTRICAL WORK, INTERIOR and 16375 ELECTRICAL DISTRIBUTION SYSTEM, UNDERGROUND.

2.6 CONTROL PANEL

A control panel and control circuit shall be provided to interface between all barrier control stations and the power unit. The control station is defined as the main control panel as shown. The control circuit shall contain all relays, timers, and other devices or an industrial programmable controller programmed as necessary for the barrier operation. The control panel shall allow direct interface with auxiliary equipment such as card readers, remote switches, loop detectors, infrared sensors, and gate limit switches. The enclosure shall be as indicated on the drawings. All device

interconnect lines shall be run to terminal strips.

2.6.1 Voltage

The control circuit shall operate from a 120 volt 60 Hz supply. The control circuit voltage shall be 12 voltsac for all external control panels.

2.6.2 Main Control Panel

A main control panel shall be supplied to control barrier function. This panel shall have a key-lockable main switch with main power "ON" and panel "ON" lights. Buttons to raise and lower each barrier or set of barriers shall be provided. Barrier "UP" and "DOWN" indicator lights shall be included for each barrier or set of barriers. An emergency fast operate circuit (EFO) shall be operated from a push button larger than the normal controls. The EFO shall also be furnished with an EFO-active light and reset button. The main control panel shall have a key lockable switch to arm or disable the remote control panel. An indicator light shall show if the remote control panel is enabled.

2.6.3 Remote Control Panel

A remote control panel shall have a panel "ON" light that is lit when enabled by a key lockable switch on the main control panel. Buttons to raise and lower each barrier shall be provided. Barrier "UP" and "DOWN" indicator lights shall be included for each barrier. The EFO shall be operated from a push button larger than the normal controls. The EFO shall be interconnected with an EFO-active light. When the remote control panel EFO is pushed, operation of the barrier will not be possible from this panel until reset at the main control panel.

2.7 MISCELLANEOUS EQUIPMENT

2.7.1 Safety Equipment

Red/yellow 8 inch traffic lights shall be supplied for each entrance and exit to alert motorists of the barrier position. Traffic lights are not required for manual barriers. The yellow light shall indicate that the barrier is fully open. All other positions shall cause the light to show red. Brackets shall be supplied to allow the light to be mounted a minimum 4.5 feet above the roadway pavement on a 3.5 inch outside diameter metal post.

2.7.2 Heater

A waterproof barrier heater with a thermostat control and NEMA 4 junction box connection point shall be provided for de-icing and snow melting. The heater shall provide barrier operation to an ambient temperature of minus 40 degrees F. For retractable bollards, a 250-watt heater shall be provided for each bollard.

2.7.3 Signage

Signage shall read "Axle Weight Limit 9 Tons" and shall conform to FHWA SA-89-006 sign (R12.2).

2.7.4 Vertical Arm Gates (Traffic Arms)

Vertical arm gates shall have an opening and closing time of less than or

equal to 15 seconds. The gates shall be capable of 15 duty cycles per hour as a minimum. Gate shall operate the arm through 90 degrees. Gate operators shall be supplied with single phase 120 volt motors. Each gate shall be capable of being operated from a remote open-close push button station. Gates shall have a hand-crank mechanism which will allow manual operation during power failures. Each gate shall be supplied with a handcrank. Gate arms shall be constructed out of wood, steel, fiberglass, or aluminum, as specified by the manufacturer for the given lengths as shown on the drawings. Gate arms shall be covered with 16 inch wide reflectorized red and white sheeting. Each gate shall be furnished with a spare gate arm. Gate operator cabinets shall be constructed of galvanized steel and shall be painted manufacturers standard color as approved. Each gate operator shall be provided with an obstruction detector that will automatically reverse the gate motor when an obstruction is detected. The obstruction detector shall be any of the following 3 types: An electronic loop vehicle detector buried in the road, a photocell electric eye mounted on the gate operator, or a safety strip mounted on the lower edge of the arm. The detector system shall be automatically deactivated when the arm reaches the fully lowered position. Slab size and anchorage for gate operator shall be per manufacturer requirements.

2.8 FINISH

Surfaces shall be painted in accordance with requirements of Section 09900 PAINTING, GENERAL except for materials supplied with manufacturer's standard finish. The roadway plate shall have a nonskid surface. The barrier front shall have 4 inch wide reflective yellow stripes 4 inches apart. Bollards shall be painted reflective yellow with 3 inch wide black diagonal stripes. The barrier crash gate shall be painted white and the crash beam shall be painted reflective yellow with 3 inch wide black diagonal stripes.

2.9 CONCRETE

The concrete shall conform to Section 03300 CAST-IN-PLACE STRUCTURAL CONCRETE.

2.10 WELDING

Welding shall be in accordance with AWS D1.1.

2.11 PAVEMENT

After placement of the vehicle barrier, the pavement sections shall be replaced to match the section and depth of the surrounding pavement. Pavement shall be warped to match the elevations of existing pavement. Positive surface drainage, away from the vehicle barrier, shall be provided by pavement slope.

PART 3 EXECUTION

3.1 INSTALLATION

Installation shall be in accordance with manufacturers instructions and in the presence of a representative of the manufacturer. Manufacturer's representative shall be experienced in the installation, adjustment, and operation of the equipment provided. The representative shall also be present during adjustment and testing of the equipment.

3.2 HYDRAULIC LINES

Buried hydraulic lines shall be placed in polyvinyl chloride (PVC) sleeves. Positive drainage shall be provided from the hydraulic power unit to the barrier for drainage of condensation within the PVC sleeve.

3.3 ELECTRICAL

All controls shall be terminated with compression ring-style terminals. Roundhead screws and lockwashers shall be used to provide vibration-resistant connections. Connections between any printed circuit cards and the chassis shall be made with screw connections or other locking means to prevent shock or vibration separation of the card from its chassis.

3.4 FIELD TESTING

Upon completion of construction, a field test shall be performed for each vehicle barrier. The test shall include raising and lowering the barrier, both electrically and manually, through its complete range of operation. Each vehicle barrier shall then be continuously cycled for not less than 30 minutes to test for heat build-up in the hydraulic system. The Contracting Officer shall be notified at least 7 days prior to the beginning of the field test. The Contractor shall furnish all equipment and make all necessary corrections and adjustments prior to tests witnessed by the Contracting Officer. Any conditions that interfere with the proper operation of the barrier disclosed by the test shall be corrected at no additional cost to the Government. Adjustments and repairs shall be done by the Contractor under the direction of the Contracting Officer. After adjustments are made to assure correct functioning of components, applicable tests shall be completed.

3.5 FIELD TRAINING

A field training course shall be provided for designated operating staff members. Training shall be provided for a total period of not less than 1 hour of normal working time and shall start after the system is functionally complete but prior to final acceptance tests. Field training shall cover all of the items contained in the operating and maintenance instructions.

-- End of Section --

SECTION TABLE OF CONTENTS

DIVISION 02 - SITE WORK

SECTION 02921

SEEDING

PART 1 GENERAL

1.1 REFERENCES
1.2 MEASUREMENT AND PAYMENT
1.3 SUBMITTALS
1.4 SOURCE INSPECTION
1.5 DELIVERY, INSPECTION, STORAGE, AND HANDLING
1.5.1 Delivery
1.5.1.1 Delivered Topsoil
1.5.1.2 Soil Amendments
1.5.1.3 Pesticides
1.5.2 Inspection
1.5.3 Storage
1.5.4 Handling
1.5.5 Time Limitation

PART 2 PRODUCTS

2.1 SEED
2.1.1 Seed Classification
2.1.2 Permanent Seed Species and Mixtures
2.1.3 Temporary Seed Species
2.1.4 Quality
2.1.5 Seed Mixing
2.1.6 Substitutions
2.2 TOPSOIL
2.3 SOIL AMENDMENTS
2.3.1 pH Adjuster
2.3.1.1 Limestone
2.3.1.2 Hydrated Lime
2.3.1.3 Burnt Lime
2.3.2 Fertilizer
2.3.3 Nitrogen Carrier Fertilizer
2.3.4 Organic Material
2.3.4.1 Bonemeal
2.3.4.2 Rotted Manure
2.3.4.3 Decomposed Wood Derivatives
2.3.4.4 Recycled Compost
2.3.4.5 Worm Castings
2.3.5 Soil Conditioner
2.3.5.1 Sand
2.3.5.2 Super Absorbent Polymers
2.3.5.3 Calcined Clay
2.3.5.4 Gypsum
2.3.5.5 Expanded Shale, Clay, or Slate (ESCS)
2.4 MULCH

2.4.1 Straw
2.4.2 Hay
2.4.3 Wood Cellulose Fiber
2.4.4 Paper Fiber
2.5 ASPHALT ADHESIVE
2.6 WATER
2.7 PESTICIDE
2.8 SURFACE EROSION CONTROL MATERIAL
2.8.1 Surface Erosion Control Blanket
2.8.2 Surface Erosion Control Fabric
2.8.3 Surface Erosion Control Net
2.8.4 Surface Erosion Control Chemicals
2.8.5 Hydrophilic Colloids
2.8.6 Erosion Control Material Anchors

PART 3 EXECUTION

3.1 INSTALLING SEED TIME AND CONDITIONS
3.1.1 Seeding Time
3.1.2 Seeding Conditions
3.1.3 Equipment Calibration
3.1.4 Soil Test
3.2 SITE PREPARATION
3.2.1 Finished Grade and Topsoil
3.2.2 Application of Soil Amendments
3.2.2.1 Applying pH Adjuster
3.2.2.2 Applying Fertilizer
3.2.2.3 Applying Soil Conditioner
3.2.2.4 Applying Super Absorbent Polymers
3.2.3 Tillage
3.2.4 Prepared Surface
3.2.4.1 Preparation
3.2.4.2 Lawn Area Debris
3.2.4.3 Field Area Debris
3.2.4.4 Protection
3.3 INSTALLATION
3.3.1 Installing Seed
3.3.1.1 Broadcast Seeding
3.3.1.2 Drill Seeding
3.3.1.3 Rolling
3.3.2 Hydroseeding
3.3.3 Mulching
3.3.3.1 Hay or Straw Mulch
3.3.3.2 Mechanical Anchor
3.3.3.3 Asphalt Adhesive Tackifier
3.3.3.4 Non-Asphaltic Tackifier
3.3.3.5 Asphalt Adhesive Coated Mulch
3.3.3.6 Wood Cellulose Fiber, Paper Fiber, and Recycled Paper
3.3.4 Watering Seed
3.4 SURFACE EROSION CONTROL
3.4.1 Surface Erosion Control Material
3.4.2 Temporary Seeding
3.4.2.1 Soil Amendments
3.4.2.2 Remaining Soil Amendments
3.5 QUANTITY CHECK
3.6 APPLICATION OF PESTICIDE
3.6.1 Technical Representative
3.6.2 Application
3.7 RESTORATION AND CLEAN UP

3.7.1 Restoration
3.7.2 Clean Up
3.8 PROTECTION OF INSTALLED AREAS
3.9 SEED ESTABLISHMENT PERIOD
3.9.1 Commencement
3.9.2 Satisfactory Stand of Grass Plants
3.9.2.1 Lawn Area
3.9.2.2 Field Area
3.9.3 Maintenance During Establishment Period
3.9.3.1 Mowing
3.9.3.2 Post-Fertilization
3.9.3.3 Pesticide Treatment
3.9.3.4 Repair or Reinstall
3.9.3.5 Maintenance Record

-- End of Section Table of Contents --

SECTION 02921

SEEDING

PART 1 GENERAL

1.1 REFERENCES

The publications listed below form a part of this specification to the extent referenced. The publications are referred to in the text by basic designation only.

AGRICULTURAL MARKETING SERVICE (AMS)

AMS-01	(Aug 95) Federal Seed Act Regulations Part 201

AMERICAN SOCIETY FOR TESTING AND MATERIALS (ASTM)

ASTM C 602	(1995a) Agricultural Liming Materials
ASTM D 977	(1991) Emulsified Asphalt
ASTM D 2028	(1976; R 1992) Cutback Asphalt (Rapid-Curing Type)
ASTM D 4972	(1995a) pH of Soils
ASTM D 5268	(1992; R 1996) Topsoil Used for Landscaping Purposes
ASTM D 5883	(1996) Standard Guide for Use of Rotary Kiln Produced Expanded Shale, Clay or Slate (ESCS) as a Mineral Amendment in Topsoil Used for Landscaping and Related Purposes

1.2 MEASUREMENT AND PAYMENT

Measurement for compensation shall be the number of square feet of hydroseeding sprayed and accepted under the base year Line Items; 0027AB, HYDROSEEDING (LERSS THAN 10,000 SF) (ASSUME DESERT MIX) and 0027AC, HYDROSEEDING (MORE THAN 10,000 SF) (ASSUME DESERT MIX) of the Pricing Schedule.

1.3 SUBMITTALS

Government approval is required for submittals with a "GA" designation; submittals having an "FIO" designation are for information only. The following shall be submitted in accordance with Section 01330 SUBMITTAL PROCEDURES:

SD-01 Data

Equipment; [_FIO____]. Surface Erosion Control Material; [_FIO____]. Chemical Treatment Material; [_FIO____].

Manufacturer's literature including physical characteristics, application and installation instructions for equipment, surface erosion control material and chemical treatment material.

SD-07 Schedules

Equipment; [_FIO____].

A listing of equipment to be used for the seeding operation.

SD-08 Statements

Delivery; [FIO_____].

Delivery schedule.

Finished Grade and Topsoil; [_FIO____].

Finished grade status.

Topsoil; [_FIO____].

Availability of topsoil from the stripping and stock piling operation.

SD-09 Reports

Equipment Calibration; [FIO_____].

Certification of calibration tests conducted on the equipment used in the seeding operation.

Soil Test; [_FIO____].

Certified reports of inspections and laboratory tests, prepared by an independent testing agency, including analysis and interpretation of test results. Each report shall be properly identified. Test methods used and compliance with recognized test standards shall be described.

SD-13 Certificates

Seed; [_FIO_]. Topsoil; [_FIO_]. pH Adjuster; [_FIO_]. Fertilizer; [_FIO_]. Organic Material; [_FIO_]. Soil Conditioner; [_FIO_]. Mulch; [_FIO_]. Asphalt Adhesive; [_FIO_]. Pesticide; [_FIO_].

Prior to the delivery of materials, certificates of compliance attesting that materials meet the specified requirements. Certified copies of the material certificates shall include the following:

a. Seed. Classification, botanical name, common name, percent pure live seed, minimum percent germination and hard seed, maximum percent weed seed content, and date tested.

b. Topsoil. Particle size, pH, organic matter content, textural class, soluble salts, chemical and mechanical analyses.

c. pH Adjuster. Calcium carbonate equivalent and sieve analysis.

d. Fertilizer. Chemical analysis and composition percent.

e. Organic Material: Composition and source.

f. Soil Conditioner: Composition and source.

g. Mulch: Composition and source.

h. Asphalt Adhesive: Composition.

i. Pesticide. EPA registration number and registered uses.

SD-14 Samples

Delivered Topsoil; [_FIO_].

Samples taken from several locations at the source.

Soil Amendments; [_FIO_].

A 10 pound sample.

Mulch; [_FIO_].

A 10 pound sample.

SD-18 Records

Quantity Check; [_FIO_].

Bag count or bulk weight measurements of material used compared with area covered to determine the application rate and quantity installed.

Seed Establishment Period; [_FIO_].

Calendar time period for the seed establishment period. When there is more than one seed establishment period, the boundaries of the seeded area covered for each period shall be described.

Maintenance Record; [_FIO_].

Maintenance work performed, area repaired or reinstalled, diagnosis for unsatisfactory stand of grass plants.

Application of Pesticide; [_FIO_].

Pesticide treatment plan with sequence of treatment work with dates and times. The pesticide trade name, EPA registration number, chemical composition, formulation, concentration of original and diluted material, application rate of active ingredients, method of application, area treated, amount applied; and the name and state license number of the state certified applicator shall be included.

1.4 SOURCE INSPECTION

The source of delivered topsoil shall be subject to inspection.

1.5 DELIVERY, INSPECTION, STORAGE, AND HANDLING

1.5.1 Delivery

A delivery schedule shall be provided at least 10 calendar days prior to the first day of delivery.

1.5.1.1 Delivered Topsoil

Prior to the delivery of any topsoil, its availability shall be verified in paragraph TOPSOIL. A soil test shall be provided for topsoil delivered to the site.

1.5.1.2 Soil Amendments

Soil amendments shall be delivered to the site in the original, unopened containers bearing the manufacturer's chemical analysis. In lieu of containers, soil amendments may be furnished in bulk. A chemical analysis shall be provided for bulk deliveries.

1.5.1.3 Pesticides

Pesticide material shall be delivered to the site in the original, unopened containers bearing legible labels indicating the EPA registration number and the manufacturer's registered uses.

1.5.2 Inspection

Seed shall be inspected upon arrival at the job site for conformity to species and quality. Seed that is wet, moldy, or bears a test date five months or older, shall be rejected. Other materials shall be inspected for compliance with specified requirements. The following shall be rejected: open soil amendment containers or wet soil amendments; topsoil that contains slag, cinders, stones, lumps of soil, sticks, roots, trash or other material over a minimum 1-1/2 inch diameter; and topsoil that contains viable plants and plant parts. Unacceptable materials shall be removed from the job site.

1.5.3 Storage

Materials shall be stored in designated areas. Seed, lime, and fertilizer shall be stored in cool, dry locations away from contaminants. Chemical treatment material shall be stored according to manufacturer's instructions and not with seeding operation materials.

1.5.4 Handling

Except for bulk deliveries, materials shall not be dropped or dumped from vehicles.

1.5.5 Time Limitation

Hydroseeding time limitation for holding seed in the slurry shall be a maximum 24 hours.

PART 2 PRODUCTS

2.1 SEED

2.1.1 Seed Classification

[State-certified] [State-approved] seed of the latest season's crop shall be provided in original sealed packages bearing the producer's guaranteed analysis for percentages of mixture, purity, germination, hard seed, weed seed content, and inert material. Labels shall be in conformance with AMS-01 and applicable state seed laws.

2.1.2 Permanent Seed Species and Mixtures

Permanent seed species and mixtures shall be proportioned by weight as follows:

Botanical Name	Common Name	Mixture Percent by Weight
	LAWN SEED	
[FESTUCA ARUNDINACEA SCHREB./ TALL FESCUE]		[10LBS/1000sqft]

2.1.3 Temporary Seed Species

Temporary seed species for surface erosion control or overseeding shall be as follows:

Botanical Name	Common Name	Mixture Percent by Weight
[FESTUCA ARUNDINACEA SCHREB./TALL FESCUE]		[10LBS/1000sqft]

2.1.4 Quality

Weed seed shall be a maximum 1 percent by weight of the total mixture.

2.1.5 Seed Mixing

The mixing of seed may be done by the seed supplier prior to delivery, or on site as directed.

2.1.6 Substitutions

Substitutions will not be allowed without written request and approval from the Contracting Officer.

2.2 TOPSOIL

Topsoil shall be as defined in ASTM D 5268. When available, the topsoil shall be the existing surface soil stripped and stockpiled onsite in accordance with Section 02300 EARTHWORK. When additional topsoil is required beyond the available topsoil from the stripping operation, topsoil shall be delivered and amended as recommended by the soil test for the seed specified. Topsoil shall be free from slag, cinders, stones, lumps of soil, sticks, roots, trash or other material over a minimum 1-1/2 inch diameter. Topsoil shall be free from viable plants and plant parts.

2.3 SOIL AMENDMENTS

Soil amendments shall consist of pH adjuster, fertilizer, organic material and soil conditioners meeting the following requirements. Vermiculite shall not be used.

2.3.1 pH Adjuster

The pH adjuster shall be an agricultural liming material in accordance with ASTM C 602. These materials may be burnt lime, hydrated lime, ground limestone, sulfur, or shells. The pH adjuster shall be used to create a favorable soil pH for the plant material specified.

2.3.1.1 Limestone

Limestone material shall contain a minimum calcium carbonate equivalent of 80 percent. Gradation: A minimum 95 percent shall pass through a No. 8 sieve and a minimum 55 percent shall pass through a No. 60 sieve. To raise soil pH, ground limestone shall be used.

2.3.1.2 Hydrated Lime

Hydrated lime shall contain a minimum calcium carbonate equivalent of 110 percent. Gradation: A minimum 100 percent shall pass through a No. 8 sieve and a minimum 97 percent shall pass through a No. 60 sieve.

2.3.1.3 Burnt Lime

Burnt lime shall contain a minimum calcium carbonate equivalent of 140 percent. Gradation: A minimum 95 percent shall pass through a No. 8 sieve and a minimum 35 percent shall pass through a No. 60 sieve.

2.3.2 Fertilizer

[It shall be as recommended by the soil test] [The nutrients ratio shall be [10] percent nitrogen, [20] percent phosphorus, and [20] percent potassium]. Fertilizer shall be controlled release commercial grade, free flowing, uniform in composition, and consist of a nitrogen-phosphorus-potassium ratio. The fertilizer shall be derived from sulphur coated urea, urea formaldehyde, plastic or polymer coated pills, or isobutylenediurea (IBDU). Fertilizer shall be balanced with the inclusion of trace minerals and micro-nutrients.

2.3.3 Nitrogen Carrier Fertilizer

[It shall be as recommended by the soil test] [The nutrients ratio shall be [46] percent nitrogen, [0] percent phosphorus, and [0] percent potassium]. Nitrogen carrier fertilizer shall be commercial grade, free flowing, and uniform in composition. The fertilizer may be a liquid nitrogen solution.

2.3.4 Organic Material

Organic material shall consist of either bonemeal, rotted manure, decomposed wood derivatives, recycled compost, or worm castings.

2.3.4.1 Bonemeal

Bonemeal shall be finely ground, steamed bone product containing from 2 to

4 percent nitrogen and 16 to 40 percent phosphoric acid.

2.3.4.2 Rotted Manure

Rotted manure shall be unleached horse, chicken or cattle manure containing a maximum 25 percent by volume of straw, sawdust, or other bedding materials. It shall contain no chemicals or ingredients harmful to plants. The manure shall be heat treated to kill weed seeds and be free of stones, sticks, and soil.

2.3.4.3 Decomposed Wood Derivatives

Decomposed wood derivatives shall be ground bark, sawdust, yard trimmings, or other wood waste material that is free of stones, sticks, soil, and toxic substances harmful to plants, and is fully composted or stabilized with nitrogen.

2.3.4.4 Recycled Compost

Compost shall be a well decomposed, stable, weed free organic matter source. Compost shall be derived from food; agricultural or industrial residuals; biosolids (treated sewage sludge); yard trimmings; or source-separated or mixed solid waste. The compost shall possess no objectionable odors and shall not resemble the raw material from which it was derived. The material shall not contain substances toxic to plants. Gradation: The compost material shall pass through a 3/8 inch screen, possess a pH of 5.5 to 8.0, and have a moisture content between 35-55 percent by weight. The material shall not contain more than 1 percent by weight of man-made foreign matter. Compost shall be cleaned of plastic materials larger than 2 inches in length.

2.3.4.5 Worm Castings

Worm castings shall be screened from worms and food source, and shall be commercially packaged.

2.3.5 Soil Conditioner

Soil conditioner shall be sand, super absorbent polymers, calcined clay, or gypsum for use singly or in combination to meet the requirements of the soil test.

2.3.5.1 Sand

Sand shall be clean and free of toxic materials. Gradation: A minimum 95 percent by weight shall pass a No. 10 sieve and a minimum 10 percent by weight shall pass a No. 16 sieve. Greensand shall be balanced with the inclusion of trace minerals and nutrients.

2.3.5.2 Super Absorbent Polymers

To improve water retention in soils, super absorbent polymers shall be sized and applied according to the manufacturer's recommendations. Polymers shall be added as a soil amendment and be cross-linked polyacrylamide, with an absorption capacity of 250-400 times its weight. Polymers shall also be added to the seed and be a starch grafted polyacrylonitrite, with graphite added as a tacky sticker. It shall have an absorption capacity of 100 plus times its weight.

2.3.5.3 Calcined Clay

Calcined clay shall be granular particles produced from montmorillonite clay calcined to a minimum temperature of 1200 degrees F. Gradation: A minimum 90 percent shall pass a No. 8 sieve; a minimum 99 percent shall be retained on a No. 60 sieve; and a maximum 2 percent shall pass a No. 100 sieve. Bulk density: A maximum 40 pounds per cubic foot.

2.3.5.4 Gypsum

Gypsum shall be commercially packaged, free flowing, and a minimum 95 percent calcium sulfate by volume.

2.3.5.5 Expanded Shale, Clay, or Slate (ESCS)

Rotary kiln produced ESCS material shall be in conformance with ASTM D 5883.

2.4 MULCH

Mulch shall be free from weeds, mold, and other deleterious materials. Mulch materials shall be native to the region.

2.4.1 Straw

Straw shall be stalks from oats, wheat, rye, barley, or rice, furnished in air-dry condition and with a consistency for placing with commercial mulch-blowing equipment.

2.4.2 Hay

Hay shall be native hay, sudan-grass hay, broomsedge hay, or other herbaceous mowings, furnished in an air-dry condition suitable for placing with commercial mulch-blowing equipment.

2.4.3 Wood Cellulose Fiber

Wood cellulose fiber shall not contain any growth or germination-inhibiting factors and shall be dyed an appropriate color to facilitate placement during application. Composition on air-dry weight basis: 9 to 15 percent moisture, pH range from 4.5 to 6.0.

2.4.4 Paper Fiber

Paper fiber mulch shall be recycled news print that is shredded for the purpose of mulching seed.

2.5 ASPHALT ADHESIVE

Asphalt adhesive shall conform to the following: Emulsified asphalt, conforming to ASTM D 977, Grade SS-1; and cutback asphalt, conforming to ASTM D 2028, Designation RC-70.

2.6 WATER

Water shall be the responsibility of the Contractor, unless otherwise noted. Water shall not contain elements toxic to plant life.

2.7 PESTICIDE

Pesticide shall be insecticide, herbicide, fungicide, nematocide, rodenticide or miticide. For the purpose of this specification, a soil fumigant shall have the same requirements as a pesticide. The pesticide material shall be EPA registered and approved.

2.8 SURFACE EROSION CONTROL MATERIAL

Surface erosion control material shall conform to the following:

2.8.1 Surface Erosion Control Blanket

Blanket shall be machine produced mat of wood excelsior formed from a web of interlocking wood fibers; covered on one side with either knitted straw blanket-like mat construction; covered with biodegradable plastic mesh; or interwoven biodegradable thread, plastic netting, or twisted kraft paper cord netting.

2.8.2 Surface Erosion Control Fabric

Fabric shall be knitted construction of polypropylene yarn with uniform mesh openings 3/4 to 1 inch square with strips of biodegradable paper. Filler paper strips shall have a minimum life of 6 months.

2.8.3 Surface Erosion Control Net

Net shall be heavy, twisted jute mesh, weighing approximately 1.22 pounds per linear yard and 4 feet wide with mesh openings of approximately 1 inch square.

2.8.4 Surface Erosion Control Chemicals

Chemicals shall be high-polymer synthetic resin or cold-water emulsion of selected petroleum resins.

2.8.5 Hydrophilic Colloids

Hydrophilic colloids shall be physiologically harmless to plant and animal life without phytotoxic agents. Colloids shall be naturally occurring, silicate powder based, and shall form a water insoluble membrane after curing. Colloids shall resist mold growth.

2.8.6 Erosion Control Material Anchors

Erosion control anchors shall be as recommended by the manufacturer.

PART 3 EXECUTION

3.1 INSTALLING SEED TIME AND CONDITIONS

3.1.1 Seeding Time

Seed shall be installed from [FEBRUARY 1] to [MARCH 15] for spring establishment; and from [SEPTEMBER 1] to [OCTOBER 15] for fall establishment.

3.1.2 Seeding Conditions

Seeding operations shall be performed only during periods when beneficial results can be obtained. When drought, excessive moisture, or other

unsatisfactory conditions prevail, the work shall be stopped when directed. When special conditions warrant a variance to the seeding operations, proposed alternate times shall be submitted for approval.

3.1.3 Equipment Calibration

Immediately prior to the commencement of seeding operations, calibration tests shall be conducted on the equipment to be used. These tests shall confirm that the equipment is operating within the manufacturer's specifications and will meet the specified criteria. The equipment shall be calibrated a minimum of once every day during the operation. The calibration test results shall be provided within 1 week of testing.

3.1.4 Soil Test

Delivered topsoil, existing soil in smooth graded areas, and stockpiled topsoil shall be tested in accordance with ASTM D 5268 and ASTM D 4972 for determining the particle size, pH, organic matter content, textural class, chemical analysis, soluble salts analysis, and mechanical analysis. Sample collection on site shall be random over the entire site. Sample collection for stockpiled topsoil shall be at different levels in the stockpile. The soil shall be free from debris, noxious weeds, toxic substances, or other materials harmful to plant growth. The test shall determine the quantities and type of soil amendments required to meet local growing conditions for the seed species specified.

3.2 SITE PREPARATION

3.2.1 Finished Grade and Topsoil

The Contractor shall verify that finished grades are as indicated on drawings, and the placing of topsoil, smooth grading, and compaction requirements have been completed in accordance with Section 02300 EARTHWORK, prior to the commencement of the seeding operation.

3.2.2 Application of Soil Amendments

3.2.2.1 Applying pH Adjuster

[The pH adjuster shall be applied as recommended by the soil test] The pH adjuster shall be incorporated into the soil to a maximum 4 inch depth or may be incorporated as part of the tillage operation.

3.2.2.2 Applying Fertilizer

[The fertilizer shall be applied as recommended by the soil test] [The application rate shall be [1 to 2] pounds per 1000 square feet]. Fertilizer shall be incorporated into the soil to a maximum 4 inch depth or may be incorporated as part of the tillage or hydroseeding operation.

3.2.2.3 Applying Soil Conditioner

[The soil conditioner shall be as recommended by the soil test] The soil conditioner shall be spread uniformly over the soil a minimum 1 inch depth and thoroughly incorporated by tillage into the soil to a maximum 4 inch depth.

3.2.2.4 Applying Super Absorbent Polymers

Polymers shall be spread uniformly over the soil as recommended by the manufacturer and thoroughly incorporated by tillage into the soil to a maximum 4 inch depth.

3.2.3 Tillage

Soil on slopes up to a maximum 3-horizontal-to-1-vertical shall be tilled to a minimum 4 inch depth. On slopes between 3-horizontal-to-1-vertical and 1-horizontal-to-1 vertical, the soil shall be tilled to a minimum 2 inch depth by scarifying with heavy rakes, or other method. Rototillers shall be used where soil conditions and length of slope permit. On slopes 1-horizontal-to-1 vertical and steeper, no tillage is required. Drainage patterns shall be maintained as indicated on drawings. Areas compacted by construction operations shall be completely pulverized by tillage. Soil used for repair of surface erosion or grade deficiencies shall conform to topsoil requirements. The pH adjuster, fertilizer, and soil conditioner may be applied during this procedure.

3.2.4 Prepared Surface

3.2.4.1 Preparation

The prepared surface shall be a maximum 1 inch below the adjoining grade of any surfaced area. New surfaces shall be blended to existing areas. The prepared surface shall be completed with a light raking to remove debris.

3.2.4.2 Lawn Area Debris

Debris and stones over a minimum 5/8 inch in any dimension shall be removed from the surface.

3.2.4.3 Field Area Debris

Debris and stones over a minimum 3 inch in any dimension shall be removed from the surface.

3.2.4.4 Protection

Areas with the prepared surface shall be protected from compaction or damage by vehicular or pedestrian traffic and surface erosion.

3.3 INSTALLATION

Prior to installing seed, any previously prepared surface compacted or damaged shall be reworked to meet the requirements of paragraph SITE PREPARATION. Seeding operations shall not take place when the wind velocity will prevent uniform seed distribution.

3.3.1 Installing Seed

Seeding method shall be [Broadcast Seeding] [Drill Seeding] [Hydroseeding]. Seeding procedure shall ensure even coverage. Gravity feed applicators, which drop seed directly from a hopper onto the prepared soil, shall not be used because of the difficulty in achieving even coverage, unless otherwise approved. Absorbent polymer powder shall be mixed with the dry seed at the rate recommended by the manufacturer.

3.3.1.1 Broadcast Seeding

Seed shall be uniformly broadcast at the rate of [10] pounds per 1000 square feet using broadcast seeders. Half the total rate of seed application shall be broadcast in 1 direction, with the remainder of the seed rate broadcast at 90 degrees from the first direction. Seed shall be covered a maximum 1/4 inch depth by disk harrow, steel mat drag, cultipacker, or other approved device.

3.3.1.2 Drill Seeding

Seed shall be uniformly drilled to a maximum 1/2 inch depth and at the rate of [10] pounds per 1000 square feet, using equipment having drills a maximum 7 inches distance apart. Row markers shall be used with the drill seeder. Half the total rate of seed application shall be drilled in 1 direction, with the remainder of the seed rate drilled at 90 degrees from the first direction. The drilling equipment shall be maintained with half full seed boxes during the seeding operations.

3.3.1.3 Rolling

The entire area shall be firmed with a roller not exceeding 90 pounds per foot roller width. Slopes over a maximum 3-horizontal-to-1 vertical shall not be rolled. Areas seeded with seed drills equipped with rollers shall not be rolled.

3.3.2 Hydroseeding

Seed shall be mixed to ensure broadcast at the rate of [10] pounds per 1000 square feet. Seed and fertilizer shall be added to water and thoroughly mixed to meet the rates specified. The time period for the seed to be held in the slurry shall be a maximum 24 hours. [Wood cellulose fiber mulch and tackifier shall be added at the rates recommended by the manufacturer after the seed, fertilizer, and water have been thoroughly mixed to produce a homogeneous slurry.] Slurry shall be uniformly applied under pressure over the entire area. The hydroseeded area shall not be rolled.

3.3.3 Mulching

3.3.3.1 Hay or Straw Mulch

Hay or straw mulch shall be spread uniformly at the rate of 2 tons per acre. Mulch shall be spread by hand, blower-type mulch spreader, or other approved method. Mulching shall be started on the windward side of relatively flat areas or on the upper part of steep slopes, and continued uniformly until the area is covered. The mulch shall not be bunched or clumped. Sunlight shall not be completely excluded from penetrating to the ground surface. All areas installed with seed shall be mulched on the same day as the seeding. Mulch shall be anchored immediately following spreading.

3.3.3.2 Mechanical Anchor

Mechanical anchor shall be a V-type-wheel land packer; a scalloped-disk land packer designed to force mulch into the soil surface; or other suitable equipment.

3.3.3.3 Asphalt Adhesive Tackifier

Asphalt adhesive tackifier shall be sprayed at a rate between 10 to 13 gallons per 1000 square feet. Sunlight shall not be completely excluded from penetrating to the ground surface.

3.3.3.4 Non-Asphaltic Tackifier

Hydrophilic colloid shall be applied at the rate recommended by the manufacturer, using hydraulic equipment suitable for thoroughly mixing with water. A uniform mixture shall be applied over the area.

3.3.3.5 Asphalt Adhesive Coated Mulch

Hay or straw mulch may be spread simultaneously with asphalt adhesive applied at a rate between 10 to 13 gallons per 1000 square feet, using power mulch equipment which shall be equipped with suitable asphalt pump and nozzle. The adhesive-coated mulch shall be applied evenly over the surface. Sunlight shall not be completely excluded from penetrating to the ground surface.

3.3.3.6 Wood Cellulose Fiber, Paper Fiber, and Recycled Paper

Wood cellulose fiber, paper fiber, or recycled paper shall be applied as part of the hydroseeding operation. The mulch shall be mixed and applied in accordance with the manufacturer's recommendations.

3.3.4 Watering Seed

Watering shall be started immediately after completing the seeding of an area. Water shall be applied to supplement rainfall at a rate sufficient to ensure moist soil conditions to a minimum 1 inch depth. Run-off and puddling shall be prevented. Watering trucks shall not be driven over turf areas, unless otherwise directed. Watering of other adjacent areas or plant material shall be prevented.

3.4 SURFACE EROSION CONTROL

3.4.1 Surface Erosion Control Material

Where indicated or as directed, surface erosion control material shall be installed in accordance with manufacturer's instructions. Placement of the material shall be accomplished without damage to installed material or without deviation to finished grade.

3.4.2 Temporary Seeding

[The application rate shall be [7] pounds per 1000 square yards.] When directed during contract delays affecting the seeding operation or when a quick cover is required to prevent surface erosion, the areas designated shall be seeded in accordance with temporary seed species listed under Paragraph SEED.

3.4.2.1 Soil Amendments

When soil amendments have not been applied to the area, the quantity of 1/2 of the required soil amendments shall be applied and the area tilled in accordance with paragraph SITE PREPARATION. The area shall be watered in accordance with paragraph Watering Seed.

3.4.2.2 Remaining Soil Amendments

The remaining soil amendments shall be applied in accordance with the paragraph Tillage when the surface is prepared for installing seed.

3.5 QUANTITY CHECK

For materials provided in bags, the empty bags shall be retained for recording the amount used. For materials provided in bulk, the weight certificates shall be retained as a record of the amount used. The amount of material used shall be compared with the total area covered to determine the rate of application used. Differences between the quantity applied and the quantity specified shall be adjusted as directed.

3.6 APPLICATION OF PESTICIDE

When application of a pesticide becomes necessary to remove a pest or disease, a pesticide treatment plan shall be submitted and coordinated with the installation pest management program.

3.6.1 Technical Representative

The certified installation pest management coordinator shall be the technical representative, and shall be present at all meetings concerning treatment measures for pest or disease control. They may be present during treatment application.

3.6.2 Application

A state certified applicator shall apply required pesticides in accordance with EPA label restrictions and recommendations. Clothing and personal protective equipment shall be used as specified on the pesticide label. A closed system is recommended as it prevents the pesticide from coming into contact with the applicator or other persons. Water for formulating shall only come from designated locations. Filling hoses shall be fitted with a backflow preventer meeting local plumbing codes or standards. Overflow shall be prevented during the filling operation. Prior to each day of use, the equipment used for applying pesticide shall be inspected for leaks, clogging, wear, or damage. Any repairs are to be performed immediately. A pesticide plan shall be submitted.

3.7 RESTORATION AND CLEAN UP

3.7.1 Restoration

Existing turf areas, pavements, and facilities that have been damaged from the seeding operation shall be restored to original condition at Contractor's expense.

3.7.2 Clean Up

Excess and waste material shall be removed from the seeded areas and shall be disposed offsite. Adjacent paved areas shall be cleaned.

3.8 PROTECTION OF INSTALLED AREAS

Immediately upon completion of the seeding operation in an area, the area shall be protected against traffic or other use by erecting barricades and providing signage as required, or as directed. Signage shall be in accordance with Section 10430 EXTERIOR SIGNAGE.

3.9 SEED ESTABLISHMENT PERIOD

3.9.1 Commencement

The seed establishment period to obtain a healthy stand of grass plants shall begin on the first day of work under this contract and shall end 3 months after the last day of the seeding operation. Written calendar time period shall be furnished for the seed establishment period. When there is more than 1 seed establishment period, the boundaries of the seeded area covered for each period shall be described. The seed establishment period shall be coordinated with Sections 02922 SODDING, 02923 SPRIGGING, and 02930 EXTERIOR PLANTING. The seed establishment period shall be modified for inclement weather, shut down periods, or for separate completion dates of areas.

3.9.2 Satisfactory Stand of Grass Plants

Grass plants shall be evaluated for species and health when the grass plants are a minimum 1 inch high.

3.9.2.1 Lawn Area

A satisfactory stand of grass plants from the seeding operation for a lawn area shall be a minimum 20 grass plants per square foot. Bare spots shall be a maximum [6] inches square. The total bare spots shall be a maximum 2 percent of the total seeded area.

3.9.2.2 Field Area

A satisfactory stand of grass plants from the seeding operation for a field area shall be a minimum 10 grass plants per square foot. The total bare spots shall not exceed 2 percent of the total seeded area.

3.9.3 Maintenance During Establishment Period

Maintenance of the seeded areas shall include eradicating weeds, insects and diseases; protecting embankments and ditches from surface erosion; maintaining erosion control materials and mulch; protecting installed areas from traffic; mowing; watering; and post-fertilization.

3.9.3.1 Mowing

a. Lawn Areas: Lawn areas shall be mowed to a minimum 3 inch height when the turf is a maximum 4 inches high. Clippings shall be removed when the amount cut prevents sunlight from reaching the ground surface.

b. Field Areas: Field areas shall be mowed once during the season to a minimum 3 inch height. Clippings shall be removed when the amount cut prevents sunlight from reaching the ground surface.

3.9.3.2 Post-Fertilization

[The fertilizer shall be applied as recommended by the soil test] [The application rate shall be [1 to 2] pounds per 1000 square feet]. A maximum 1/2 pound per 1000 square feet of actual available nitrogen shall be provided to the grass plants. The application shall be timed prior to the advent of winter dormancy and shall be made without burning the

installed grass plants.

3.9.3.3 Pesticide Treatment

Treatment for disease or pest shall be in accordance with paragraph APPLICATION OF PESTICIDE.

3.9.3.4 Repair or Reinstall

Unsatisfactory stand of grass plants and mulch shall be repaired or reinstalled, and eroded areas shall be repaired in accordance with paragraph SITE PREPARATION.

3.9.3.5 Maintenance Record

A record of each site visit shall be furnished, describing the maintenance work performed; areas repaired or reinstalled; and diagnosis for unsatisfactory stand of grass plants.

-- End of Section --

SECTION TABLE OF CONTENTS

DIVISION 02 - SITE WORK

SECTION 02935

TURF

PART 1 GENERAL

1.1 QUALIFICATIONS
1.2 REFERENCES
1.3 MEASUREMENT AND PAYMENT
1.4 SUBMITTALS
1.5 SOURCE INSPECTIONS
1.6 DELIVERY, INSPECTION, STORAGE, AND HANDLING
1.6.1 Delivery
1.6.1.1 Protection
1.6.1.2 Topsoil
1.6.1.3 Soil Amendments
1.6.1.4 Pesticide
1.6.2 Inspection
1.6.3 Storage
1.6.4 Handling
1.6.4.1 Materials
1.6.4.2 Time Limitation
1.7 UNIT PRICES
1.7.1 Measurement
1.7.2 Payment

PART 2 PRODUCTS

2.1 MATERIALS
2.1.1 Seed (Not Applicable)
2.1.2 Sod
2.1.2.1 Sod Classification
2.1.2.2 Grass Species
2.1.2.3 Quality
2.1.2.4 Thickness
2.1.2.5 Anchors
2.1.3 Sprigs (Not Applicable)
2.1.4 Soil Amendments
2.1.4.1 Lime
2.1.4.2 Fertilizer
2.1.4.3 Organic Soil Amendments
2.1.4.4 Soil Conditioner/Fertilizer
2.1.4.5 Gypsum
2.1.4.6 Porous Silica Aggregate
2.1.4.7 Iron Sulfate
2.1.5 Mulch (Not Applicable)
2.1.6 (Not Used)
2.1.7 Water
2.1.8 Pesticide
2.1.9 Erosion Control Material (Not Applicable)

PART 3 EXECUTION

3.1 SODDING TIMES AND CONDITIONS
3.1.1 Seeding Time (Not Applicable)
3.1.2 Sodding Time
3.1.3 Sprigging Time (Not Applicable)
3.1.4 Turfing Conditions
3.2 SITE PREPARATION
3.2.1 Grading
3.2.1.1 Soil Test
3.2.2 Application of Soil Amendments
3.2.2.1 Soil Sulfur
3.2.2.2 Fertilizer
3.2.2.3 Compost
3.2.2.4 Porous Silica Aggregate
3.2.2.5 Iron Sulfate
3.2.3 Application of Soil Amendments Using Soil Conditioner/Fertilizer
3.2.3.1 Soil Sulfur
3.2.3.2 Soil Conditioner/Fertilizer
3.2.3.3 Porous Silica Aggregate
3.2.4 Tillage
3.2.4.1 Minimum Depth
3.2.5 Finished Grading
3.2.5.1 Preparation
3.2.5.2 Turf Area Debris
3.2.5.3 Protection
3.3 SEEDING (Not Applicable)
3.4 SODDING
3.4.1 General
3.4.2 Placing Sod
3.4.3 Finishing
3.4.4 Watering Sod
3.5 SPRIGGING (Not Applicable)
3.6 EROSION CONTROL (Not Applicable)
3.7 APPLICATION OF PESTICIDE
3.8 RESTORATION AND CLEAN UP
3.8.1 Restoration
3.8.2 Clean Up
3.9 PROTECTION OF TURFED AREAS
3.10 TURF ESTABLISHMENT PERIOD
3.10.1 Commencement
3.10.2 Satisfactory Stand of Turf
3.10.2.1 Sodded Area
3.10.3 Maintenance During Establishment Period
3.10.3.1 General
3.10.3.2 Mowing
3.10.3.3 Watering
3.10.3.4 Post-Fertilization
3.10.3.5 Pesticide
3.10.3.6 Repair
3.10.3.7 Maintenance Report
3.11 FINAL ACCEPTANCE
3.11.1 Preliminary Inspection
3.11.2 Final Inspection

-- End of Section Table of Contents --

SECTION 02935

TURF

PART 1 GENERAL

1.1 QUALIFICATIONS

All work shall be done by an experienced crew familiar with horticulture and industry methods and standards for sodding and turf installation.

1.2 REFERENCES

The publications listed below form a part of this specification to the extent referenced. The publications are referred to in the text by basic designation only.

AGRICULTURAL MARKETING SERVICE (AMS)

AMS-01	(Sep 1977; Amended Oct 29, l986) Federal Seed Act Regulations (Part 20): Certified Seed Regulations

AMERICAN SOCIETY FOR TESTING AND MATERIALS (ASTM)

ASTM D 977	(1986) Emulsified Asphalt
ASTM D 2028	(1976; R 1986) Cutback Asphalt (Rapid-Curing Type)
ASTM D 2607	(1969) Peats, Mosses, Humus, and Related Products

FEDERAL SPECIFICATIONS (FS)

FS O-F-241	(Rev D) Fertilizers, Mixed, Commercial
FS JJJ-S-181	(Rev B) Seeds, Agricultural

1.3 MEASUREMENT AND PAYMENT

Measurement shall be the number of square feet of turf placed and accepted. There

1.4 SUBMITTALS

Government approval is required for submittals with a "GA" designation; submittals having an "FIO" designation are for information only. The following shall be submitted in accordance with Section 01330 SUBMITTAL DESCRIPTIONS:

SD-01 Data

Manufacturer's Literature; FIO.

Manufacturer's literature discussing physical characteristics, application and installation instructions for erosion control material, and for chemical treatment material.

SD-07 Schedules.

Equipment List; FIO

A list of proposed pesticide application, seeding and mulching equipment to be used in performance of turfing operation, including descriptive data and calibration tests.

SD-08 Statements

Delivery; FIO.

Delivery schedule, at least 10 days prior to the intended date of the first delivery.

Application of Pesticide; FIO.

Pesticide treatment plan with proposed sequence of pesticide treatment work. The pesticide trade name, chemical composition, formulation, concentration, application rate of active ingredients and method of application for all materials; and the name and state license number of the state certified applicator shall be included.

Maintenance Report; FIO.

Written record of maintenance work performed.

Turf Establishment Period; FIO.

Written calendar time period for the turf establishment period. When there is more than one turf establishment period, the boundaries of the turfed area covered for each period shall be described.

SD-13 Certificates

Certificates of compliance certifying that materials meet the requirements specified, prior to the delivery of materials. Certified copies of the reports for the following materials shall be included (FIO):

a. Seed: (Not Applicable)

b. Sod: For species, mixture percentage, percent purity, field location.

c. Sprigs: (Not Applicable)

d. Fertilizer: For chemical analysis, composition percent.

e. Agricultural Limestone: (Not Applicable)

f. Peat: (Not Applicable)

g. Asphalt Adhesive: (Not Applicable)

h. Pesticide Material: For EPA and state registration number and registered uses.

i. Topsoil: For Ph, particle size, chemical analysis and mechanical analysis.

1.5 SOURCE INSPECTIONS

Sod material will be subject to inspection by the Contracting Officer at the growing site.

1.6 DELIVERY, INSPECTION, STORAGE, AND HANDLING

1.6.1 Delivery

1.6.1.1 Protection

Sod shall be protected from drying out and contamination during delivery.

1.6.1.2 Topsoil

A soil test shall be provided for topsoil delivered to the site.

1.6.1.3 Soil Amendments

Soil amendments shall be delivered to the site in the original, unopened containers bearing the manufacturer's chemical analysis. In lieu of containers, soil amendments may be furnished in bulk. A chemical analysis shall be provided for bulk deliveries.

1.6.1.4 Pesticide

Pesticide material shall be delivered to the site in the original, unopened containers bearing legible labels indicating the Environmental Protection Agency (EPA) and state registration number and the manufacturer's registered uses.

1.6.2 Inspection

Sod shall be inspected upon arrival at the job site by the Contracting Officer for conformity to type and quality in accordance with paragraph MATERIALS. Other materials shall be inspected for meeting specified requirements and unacceptable materials shall be removed from the job site.

1.6.3 Storage

Materials shall be stored in areas designated by the Contracting Officer. Sod shall be installed immediately upon delivery. Temporary stored sod shall be lightly sprinkled with water, covered with moist burlap, straw, or other covering and protected from exposure to wind and direct sunlight until planted. Covering for sod shall allow air to circulate and prevent internal heat from building up. Fertilizer shall be stored in cool, dry locations away from contaminants. Chemical treatment materials shall not be stored with other landscape materials.

1.6.4 Handling

1.6.4.1 Materials

Care shall be taken to avoid injury to sod or seed. Except for bulk deliveries, materials shall not be dropped or dumped from vehicles.

1.6.4.2 Time Limitation

a. Sod: Limitation of the time between harvesting and placing of sod shall be 36 hours.

1.7 UNIT PRICES

1.7.1 Measurement

The amount paid will be for completion of planting/installation of all turfed areas inspected and approved as accepted work. Turfed area shall be quantified in sqaure feet.

1.7.2 Payment

Quantities specified above will be paid at respective contract unit prices. Payment shall constitute full compensation for completion of turf installation. Measurement; for furnishing all materials, equipment, plant, and tools; and for labor and other incidentals necessary to complete work required.

PART 2 PRODUCTS

2.1 MATERIALS

2.1.1 Seed (Not Applicable)

2.1.2 Sod

2.1.2.1 Sod Classification

State-certified Nursery-grown sod shall be provided as classified by applicable state laws. Each individual sod section shall be of a size to permit rolling and lifting without breaking.

2.1.2.2 Grass Species

Grass species shall be proportioned as follows or alternate as recommended by local cooperative extension service personnel.

Botanical Name	Common Name	Mixture Percent
Cynodon dactylon Hybrid/	Hybrid Bermuda	100%

2.1.2.3 Quality

The sod shall be relatively free of thatch, diseases, nematodes, soil-borne insects, weeds or undesirable plants, stones larger than 2 inches in any dimension, woody plant roots and other material detrimental to a healthy stand of turf. Sod that has become dry, moldy, or yellow from heating, or has irregularly shaped pieces of sod and torn or uneven ends shall be rejected.

2.1.2.4 Thickness

Sod shall be machine cut to a uniform thickness of 1-1/4 inches within a

tolerance of 1/4 inch, excluding top growth and thatch. Measurement for thickness shall exclude top growth and thatch.

2.1.2.5 Anchors

Sod anchors shall be as recommended by the sod supplier.

2.1.3 Sprigs (Not Applicable)

2.1.4 Soil Amendments

Soil amendments shall consist of lime, fertilizer, organic soil amendments and manufactured soil conditioners meeting the following requirements.

2.1.4.1 Lime

Lime shall be agricultural limestone and shall have a minimum calcium carbonate equivalent of 90 percent and shall be ground to such a fineness that at least 90 percent will pass a 10-mesh sieve and at least 50 percent will pass a 60-mesh sieve.

2.1.4.2 Fertilizer

Fertilizer shall be commercial grade, free flowing, uniform in composition and conforming to FS O-F-241. Granular Fertilizer composition and rate of application to be as recommended by the soil test.

2.1.4.3 Organic Soil Amendments

a. Topsoil: The existing surface soil shall be stripped and stockpiled on the site in accordance with Section 02210 GRADING. When required beyond that available from stripping, the topsoil shall be delivered. Delivered topsoil shall conform to topsoil requirements specified in Section 02210 GRADING, and shall be amended as recommended by soil test.

b. Peat: Peat moss or humus derived from a bog, swampland or marsh shall conform to ASTM D 2607.

c. Sand: Clean, free of toxic materials; 95 percent by weight shall pass a 10-mesh sieve and 10 percent by weight shall pass a 16-mesh sieve.

d. Rotted Manure: Well rotted, horse or cattle manure containing a maximum 25 percent by volume of straw, sawdust, or other bedding materials, free of stones, sticks, soil and containing no chemicals or ingredients harmful to plants.

e. Decomposed Wood Derivatives: Ground bark, sawdust, or other wood waste material free of stones, sticks, soil, and toxic substances harmful to plants, stabilized with nitrogen and having the following properties:

Particle Size: Minimum percent by weight passing:

Screen Size	Percent
No. 4 mesh Screen	95
No. 8 mesh screen	80

Nitrogen Content: Minimum percent based on dry weight:

Material	Percent
Redwood Sawdust	0.5
Fir Sawdust	0.7
Fir or Pine Bark	1.0

f. Calcined Clay: (Not Applicable)

2.1.4.4 Soil Conditioner/Fertilizer

Soil conditioner and fertilizer shall be derived from organic materials such as decomposed animal, vegetable, and mineral matter, which has been composted, is relatively dry, friable, and pass a one inch sieve. The conditioner shall not contain poultry, animal or human waste, pathogenic viruses, fly larvae, insecticides, fungicides, and poisonous chemicals that would inhibit plant growth. The conditioner shall be the following guaranteed chemical analysis:

Ingredient	Percentage (Minimum)
Nitrogen	5
Phosphoric Acid	3
Water Soluble Potash	1
Humus	50
Humic Acids	15
Soluble Metallic Iron	1

2.1.4.5 Gypsum

Gypsum shall be commercially packaged, free flowing, minimum 95 percent calcium sulfate by volume.

2.1.4.6 Porous Silica Aggregate

Porous silica aggregate shall be of commercial grade diatomaceous earth and be free flowing.

2.1.4.7 Iron Sulfate

Iron sulfate shall be commercially packaged, free flowing with an analysis of 19% Fe and 14% S.

2.1.5 Mulch (Not Applicable)

2.1.6 (Not Used)

2.1.7 Water

Water shall be from a designated reclaimed water source.

2.1.8 Pesticide

Pesticide shall be insecticide, herbicide, fungicide, nematocide, rodenticide and miticide. For the purpose of this specification, soil fumigant shall have the same requirements as a pesticide. The pesticide

material shall be EPA and state registered and approved insecticide, herbicide, fungicide, nematocide, rodenticide, miticide, and soil fumigant.

2.1.9 Erosion Control Material (Not Applicable)

PART 3 EXECUTION

3.1 SODDING TIMES AND CONDITIONS

3.1.1 Seeding Time (Not Applicable)

3.1.2 Sodding Time

Sod shall be placed from April to June for spring planting and from September to October for fall planting. Sod placement shall be timed to allow enough time for sod establishment before dormancy.

3.1.3 Sprigging Time (Not Applicable)

3.1.4 Turfing Conditions

Turf operations shall be performed only during periods when beneficial results can be obtained. When drought, excessive moisture or other unsatisfactory conditions prevail, the work shall be stopped when directed. When special conditions warrant a variance to the turf operations, proposed times shall be submitted to and approved by the Contracting Officer.

3.2 SITE PREPARATION

3.2.1 Grading

The Contracting Officer shall verify that finished grades are as indicated on drawings, and the placing of topsoil and the smooth grading has been completed in accordance with Section 02210 GRADING.

3.2.1.1 Soil Test

A soil test shall be performed for pH, chemical analysis and mechanical analysis to establish the quantities and type of soil amendments required to meet local and site specific growing conditions for the type and variety of turf specified.

3.2.2 Application of Soil Amendments

The following soil amendments shall be incorporated into the soil if a manufactured soil conditioner/fertilizer is not utilized:

3.2.2.1 Soil Sulfur

Soil Sulfur shall be applied at the rate recommended by the soil test, estimated rate 32.8 pounds per 1000 square feet. Sulfur shall be incorporated into the soil to a minimum depth of 6 inches or may be incorporated as part of the tillage operation.

3.2.2.2 Fertilizer

Fertilizer shall be applied at the rate recommended by the soil test. Fertilizer shall be incorporated into the soil to a minimum depth of 6

inches or may be incorporated as part of the tillage or hydroseeding operation.

3.2.2.3 Compost

A nitrogen stabilized compost shall be spread uniformly over the soil at the rate of 4.0 cu yds per 1000 sq. ft. and thoroughly incorporated by tillage into the soil to a minimum depth of 6 inches.

3.2.2.4 Porous Silica Aggregate

Porous silica aggregate shall be spread uniformly over the soil at the rate of 500 lbs per 1000 sq. ft

3.2.2.5 Iron Sulfate

Iron sulfate shall be applied and incorporated uniformly into the soil at the rate of 5 lbs per 1000 sq. ft.

3.2.3 Application of Soil Amendments Using Soil Conditioner/Fertilizer

The following soil amendment ratios shall be incorporated into the soil as based on soil test recommendations.

3.2.3.1 Soil Sulfur

Soil sulfur shall be applied at the rate recommended by the soil test, estimated rate 32.8 pounds per 1000 square feet. Sulfur shall be incorporated into the soil to a minimum depth of 6 inches or may be incorporated as part of the tillage operation.

3.2.3.2 Soil Conditioner/Fertilizer

Soil conditioner/fertilizer shall be applied evenly at the rate of 200 lbs per 1000 sq. ft., and thoroughly incorporated as into the soil to a minimum depth of 6 inches or may be incorporated as part of the tillage operation.

3.2.3.3 Porous Silica Aggregate

Porous silica aggregate shall be spread uniformly over the soil at the rate of 500 lbs per 1000 sq. ft.

3.2.4 Tillage

3.2.4.1 Minimum Depth

Soil within turf areas shall be tilled minimum depth of 6 inches. Rototiller shall be used where soil conditions and size of area permit.

3.2.5 Finished Grading

3.2.5.1 Preparation

Turf areas shall be filled as needed or have surplus soil removed to attain the finished grade. Drainage patterns shall be maintained as indicated on drawings. Turf areas compacted by construction operations shall be completely pulverized by tillage. Soil used for repair of erosion or grade deficiencies shall conform to topsoil requirements specified in Section 02210 GRADING. Finished grade shall be 1 inch below the adjoining grade of

any surfaced area. New surfaces shall be blended to existing areas.

3.2.5.2 Turf Area Debris

Turf areas shall have debris and stones larger than 1 inch in any dimension removed from the surface.

3.2.5.3 Protection

Finished graded areas shall be protected from damage by vehicular or pedestrian traffic and erosion.

3.3 SEEDING (Not Applicable)

3.4 SODDING

3.4.1 General

Areas shall be sodded as indicated. Adequate soil moisture shall be ensured prior to sodding by spraying water on the area to be sodded and wetting the soil to a minimum depth of 1 inch.

3.4.2 Placing Sod

Rows of sod shall be placed parallel to and tightly against each other. Joints shall be staggered laterally. The sod strips shall not be stretched or overlapped. All joints shall be butted tight. Voids and air drying of roots shall be prevented. On long slopes, sod shall be laid at right angles to slopes. In ditches, sod shall be laid at right angles to the flow of water. When required, the sod shall be anchored by placing anchors a minimum distance of 2 feet on center with a minimum of 2 anchors per sod section.

3.4.3 Finishing

Air pockets shall be eliminated and a true and even surface shall be provided by tamping or rolling the sod in place. Displacement of the sod shall be assured by knitting of sod to the soil. Frayed edges shall be trimmed and holes or missing corners shall be patched in the sod.

3.4.4 Watering Sod

Watering shall be started immediately after completing each day of sodding. Water shall be applied at a rate sufficient to ensure moist soil conditions to a minimum depth of 1 inch. Run-off and puddling shall be prevented. Watering shall continue until sod is well rooted up to a maximum of 60 days.

3.5 SPRIGGING (Not Applicable)

3.6 EROSION CONTROL (Not Applicable)

3.7 APPLICATION OF PESTICIDE

When pesticide becomes necessary to remove a pest or disease, a state-certified applicator shall apply required pesticides in accordance with EPA label restrictions and recommendations and state registration limitations; Hydraulic equipment shall be provided for the liquid application of pesticides with a leak-proof tank, positive agitation

methods, controlled application pressure and metering gauges. A pesticide plan shall be provided to the Contracting Officer as stated in paragraph SUBMITTALS.

3.8 RESTORATION AND CLEAN UP

3.8.1 Restoration

Existing turf areas, pavements and facilities that have been damaged from the turfing operation shall be restored to original condition at Contractor's expense.

3.8.2 Clean Up

Excess and waste material shall be removed from the planting operation and shall be disposed of off the site. Adjacent paved areas shall be cleaned.

3.9 PROTECTION OF TURFED AREAS

Immediately after turfing, the area shall be protected against traffic or other use by erecting barricades and providing signage as required, or as directed by the Contracting Officer.

3.10 TURF ESTABLISHMENT PERIOD

3.10.1 Commencement

The Turf Establishment Period for establishing a healthy stand of turf shall begin on the first day of work under this contract and shall end 60 days after the last day of turfing operations required by this contract. Written calendar time period shall be furnished to the Contracting Officer for the Turf Establishment Period. When there is more than one turf establishment period, describe the boundaries of the turfed area covered for each period.

3.10.2 Satisfactory Stand of Turf

3.10.2.1 Sodded Area

A satisfactory stand of turf from the sodding operation is defined as vigorous living sod uniform in rooting and top growth.

3.10.3 Maintenance During Establishment Period

3.10.3.1 General

Maintenance of the turfed areas shall include eradicating weeds, eradicating insects and diseases, protecting embankments and ditches from erosion, maintaining erosion control materials and mulch, protecting turfed areas from traffic, mowing, watering, and post-fertilization.

3.10.3.2 Mowing

a. Lawn Areas: Lawn areas shall be mowed to a minimum height as recommended by the seed producer when the average height of the turf becomes 2 inches. Clippings shall be removed when the amount of cut turf is heavy enough to damage the turfed areas.

b. Field Areas: Field areas shall be mowed once during the season to a

minimum height of 3 inches.

3.10.3.3 Watering

Watering shall be at intervals to obtain a moist soil condition to a minimum depth of 1 inch. Frequency of watering and quantity of water shall be adjusted in accordance with the growth of the turf. Run-off, puddling and wilting shall be prevented.

3.10.3.4 Post-Fertilization

Nitrogen carrier fertilizer shall be applied at the rate of 7 pounds per 1000 square feet after the first month and again every three months to the final acceptance. The application shall be timed prior to the advent of winter dormancy and shall avoid excessively high nitrogen levels.

3.10.3.5 Pesticide

Treatment for disease or pest shall be in accordance with paragraph APPLICATION OF PESTICIDE.

3.10.3.6 Repair

The Contractor shall re-establish as specified herein, eroded, damaged or barren areas. Mulch shall also be repaired or replaced as required.

3.10.3.7 Maintenance Report

A written record shall be furnished to the Contracting Officer of the maintenance work performed.

3.11 FINAL ACCEPTANCE

3.11.1 Preliminary Inspection

Prior to the completion of the Turf Establishment Period, a preliminary inspection shall be held by the Contracting Officer. Time for the inspection shall be established in writing. The acceptability of the turf in accordance with the Turf Establishment Period shall be determined. A unacceptable stand of turf shall be repaired as soon as turfing conditions permit.

3.11.2 Final Inspection

A final inspection shall be held by the Contracting Officer to determine that deficiencies noted in the preliminary inspection have been corrected. Time for the inspection shall be established in writing.

-- End of Section --

SECTION TABLE OF CONTENTS

DIVISION 02 - SITE WORK

SECTION 02950

PLANTING AND LANDSCAPING

PART 1 GENERAL

1.1 REFERENCES
1.2 SUBMITTALS
1.3 SOURCE INSPECTIONS
1.3.1 Plant Materials
1.4 SHIPMENT, DELIVERY, INSPECTION, STORAGE, AND HANDLING
1.4.1 Shipment
1.4.1.1 Preparation
1.4.1.2 Antidesiccant Application
1.4.2 Delivery
1.4.2.1 Identification
1.4.2.2 Protection During Delivery
1.4.2.3 Soil Amendments
1.4.2.4 Pesticide
1.4.3 Inspection
1.4.4 Storage
1.4.4.1 Plant Storage
1.4.4.2 Storage of Other Materials
1.4.5 Handling
1.4.5.1 Time Limitation
1.5 WARRANTY
1.6 UNIT PRICES
1.6.1 Measurement
1.6.1.1 Mulch Installation
1.6.1.2 Plant Installation
1.6.1.3 Establishment/Maintenance Period
1.6.2 Payment

PART 2 PRODUCTS

2.1 PLANTS
2.1.1 Varieties
2.1.2 Substitutions
2.1.3 Growing Conditions
2.1.4 Quality
2.1.4.1 Shade and Flowering Trees
2.1.4.2 Deciduous Shrub
2.1.4.3 Coniferous Evergreen
2.1.4.4 Broadleaf Evergreen
2.1.4.5 Vines
2.1.4.6 Palms
2.1.5 Size
2.1.6 Measurement
2.2 TOPSOIL
2.2.1 Soil Test

2.3 SOIL AMENDMENTS
2.3.1 Lime
2.3.2 Dry Fertilizer
2.3.3 Bonemeal
2.3.4 Soil Amendments
2.3.4.1 Peat (Not Applicable)
2.3.4.2 Sand
2.3.4.3 Rotted Manure
2.3.4.4 Decomposed Wood Derivatives
2.3.5 Soil Conditioner
2.3.5.1 Gypsum
2.3.5.2 Aluminum Sulfate
2.4 MULCH
2.4.1 Rock Mulch
2.4.2 River Rock
2.4.3 Recycled Mulch
2.4.4 Shredded Bark
2.4.5 Wood Chips and Ground Bark
2.5 BOULDERS
2.6 WEED FABRIC (GEOTEXTILE):
2.6.1 Nonwoven Polypropylene
2.6.2 Nonwoven polyester
2.7 STAKING MATERIAL
2.7.1 Bracing Stakes
2.7.2 Tree Ties
2.8 WATER
2.9 ANTIDESICCANT
2.10 PRE-EMERGENT HERBICIDE
2.11 RAISED PLANTERS (Not Applicable)
2.12 LANDSCAPE BERMS AND MOUNDS

PART 3 EXECUTION

3.1 EXAMINATION
3.1.1 Verify Grades
3.1.2 Underground Obstructions to Planting
3.2 SITE PREPARATION
3.2.1 Finished Grade, Topsoil and Underground Utilities
3.2.2 Layout
3.2.3 Protecting Existing Vegetation
3.3 EXCAVATION
3.3.1 Obstructions Below Ground or Poor Drainage
3.3.2 Plant Pits
3.3.3 Rough Grading and Landscape Berms
3.3.4 Landscape berms
3.4 PERCOLATION TEST
3.5 PLANTING TIMES AND CONDITIONS
3.6 INSTALLATION
3.6.1 Backfill Mixtures
3.6.1.1 Backfill Soil Mix
3.6.2 Setting Plants
3.6.2.1 Palms
3.6.3 Rain Basins
3.6.4 Dry Fertilizer
3.6.5 Container-Grown Plants
3.6.6 Staking
3.7 FINISHING
3.7.1 Pruning
3.7.2 Pre-emergent Herbicide

3.7.3 Weed Fabric (Geotextile):
3.7.4 Boulders
3.7.5 Mulch
3.7.5.1 Rock Mulch
3.7.5.2 River Rock
3.7.6 Water
3.7.7 Antidesiccant Application
3.8 MAINTENANCE DURING PLANTING OPERATION
3.9 APPLICATION OF PESTICIDE MATERIAL
3.10 RESTORATION AND CLEAN UP
3.10.1 Restoration
3.10.2 Clean Up
3.11 MAINTENANCE PERIOD
3.11.1 Commencement
3.11.2 Maintenance During Establishment Period
3.11.2.1 General
3.11.2.2 Water
3.11.2.3 Weeding
3.11.2.4 Unhealthy Plants
3.11.2.5 Settlement
3.11.2.6 Pesticide Treatment
3.11.2.7 Maintenance Report
3.11.2.8 Maintenance Instruction
3.11.3 Replacement Plants
3.12 FINAL ACCEPTANCE
3.12.1 Preliminary Inspection
3.12.2 Final Inspection

-- End of Section Table of Contents --

SECTION 02950

PLANTING AND LANDSCAPING

PART 1 GENERAL

1.1 REFERENCES

The publications listed below form a part of this specification to the extent referenced. The publications are referred to in the text by basic designation only.

AMERICAN NATIONAL STANDARDS INSTITUTE (ANSI)

ANSI Z60.1	(1986) American Standard for Nursery Stock

AMERICAN SOCIETY FOR TESTING AND MATERIALS (ASTM)

ASTM D 2607	(1969) Peats, Mosses, Humus, and Related Products

FEDERAL SPECIFICATIONS (FS)

FS 0-F-241	(Rev D) Fertilizers, Mixed, Commercial

1.2 SUBMITTALS

Government approval is required for submittals with a "GA" designation; submittals having an "FIO" designation are for information only. The following shall be submitted in accordance with Section 01330 SUBMITTAL DESCRIPTIONS:

SD-07 Schedules

Delivery Schedule; FIO

Delivery Schedule, before work is started, at least 10 days prior to the intended date of the first delivery.

SD-09 Reports

Soil Test; FIO.

Percolation Test; FIO.

Certified reports of inspections and laboratory tests, prepared by an independent testing agency, including analysis and interpretation of test results. Each report shall be properly identified. Test methods used and compliance with recognized test standards shall be described.

SD-13 Certificates

Soil Amendments;FIO.

Plants;FIO.

Certificates of compliance certifying that materials meet the requirements specified, prior to the delivery of materials. Reports for the following materials shall be included.

a. Topsoil: Not Applicable.

b. Fertilizer: For chemical analysis and composition percent.

c. Agricultural Limestone: (Not Applicable)

d. Peat: (Not Applicable)

e. Plant Materials: For botanical and common name, size, quantity by species, grade, nursery grown.

f. Pesticide Material: For EPA registration number and registered uses.

SD-18 Records

Maintenance Period;FIO.

Written calendar time period for the beginning of the plant establishment period. When there is more than one establishment period, the boundaries of the planted areas covered for each period shall be described.

Maintenance Report;FIO.

Written record of maintenance work performed and quantity of plant losses and replacements.

Maintenance Instructions;FIO.

Written instructions for year-round care and upkeep of installed plants, landscaping, and irrigation system.

1.3 SOURCE INSPECTIONS

1.3.1 Plant Materials

Plant materials shall be subject to inspection at the growing site by the Contracting Officer.

1.4 SHIPMENT, DELIVERY, INSPECTION, STORAGE, AND HANDLING

1.4.1 Shipment

1.4.1.1 Preparation

Preparation for shipment shall be done in a manner that will not cause shock or damage to branches, trunk, or root systems. Container grown plant sizes shall be provided as recommended by ANSI Z60.1. Plants shall be grown in a container sufficiently long for new fibrous roots to have developed and for root mass to retain its shape and hold together when removed from container. Container shall be sufficiently rigid to hold ball shape and protect root mass during shipping.

1.4.1.2 Antidesiccant Application

Plants shall be sprayed with an antidesiccant as leaf budding occurs or when plant material has soft growth.

1.4.2 Delivery

1.4.2.1 Identification

Plants shall be identified with durable waterproof labels and weather-resistant ink. Plants shall have attached labels stating the correct plant name and size.

1.4.2.2 Protection During Delivery

Plants shall be protected during delivery to prevent desiccation of the plant or damage to the roots or balls. Branches of plants shall be protected by tying-in the branches and covering all exposed branches.

1.4.2.3 Soil Amendments

Soil amendments shall be delivered to the site in the original, unopened containers bearing the manufacturer's chemical analysis. In lieu of containers, soil amendments may be furnished in bulk. A chemical analysis shall be provided for bulk deliveries.

1.4.2.4 Pesticide

Pesticide materials shall be delivered to the site in the original unopened containers bearing legible labels indicating the Environmental Protection Agency (EPA) registration numbers and the registered uses.

1.4.3 Inspection

Plant material shall be inspected upon arrival at the job site by the Contracting Officer for conformity to the paragraph PLANTS and paragraph Shipment, and any unacceptable plant material shall be removed from the job site.

1.4.4 Storage

1.4.4.1 Plant Storage

Plants not installed on the day of arrival at the site shall be stored and protected in areas designated by the Contracting Officer. Plants shall be protected from exposure to wind and shaded from the sun. Covering that will allow air to circulate and prevent internal heat from building up shall be provided. All plants shall be kept in a moist condition by watering with a fine mist spray until planted.

1.4.4.2 Storage of Other Materials

Soil amendments shall be stored in dry locations away from contaminants. Pesticide materials shall not be stored with other landscape materials. Storage of materials shall be in areas designated or as approved by the Contracting Officer.

1.4.5 Handling

Care shall be taken to avoid injury to plants. Materials shall not be

dropped from vehicles. Container-grown plants shall be handled by the container. Plants shall not be handled by the trunk or stems.

1.4.5.1 Time Limitation

Mulch: Limitation of time between installing plant and placing mulch is 48 hours.

1.5 WARRANTY

Furnished plants shall be guaranteed to be in a vigorous growing condition for a period of 12 months regardless of the contract time period. A plant shall be replaced one time under this guarantee. A written calendar time period for the guarantee of plant growth shall be furnished to the Contracting Officer.

1.6 UNIT PRICES

1.6.1 Measurement

1.6.1.1 Mulch Installation

The amount paid will be for completion of all mulch installation, inspected and approved as accepted work. Mulch quanities shall be specifed in cubic yards

1.6.1.2 Plant Installation

The amount paid will be for completion of all plant installation, all associated equipment/fertilizer/soil amendments, backfill, inspected and approved as accepted work.

1.6.1.3 Establishment/Maintenance Period

The amount paid will be for completion of the 90 days Establishment/Maintenance period, all associated documentation, in-field training, clean-up, inspected and approved as accepted work.

1.6.2 Payment

Quantities specified above will be paid at respective contract unit prices. Payment shall constitute full compensation for completion of each item listed under 1.6.1 Measurement; for furnishing all materials, equipment, plant, and tools; and for labor and other incidentals necessary to complete work required.

PART 2 PRODUCTS

2.1 PLANTS

2.1.1 Varieties

Plants shall be nursery grown or plantation grown stock conforming to ANSI Z60.1 and shall be of the varieties specified in the plant list bearing botanical names listed in one or more of the publications listed under "Nomenclature" in ANSI Z60.1.

2.1.2 Substitutions

Substitutions will not be permitted without written request from the Contractor for approval by the Contracting Officer.

2.1.3 Growing Conditions

All plants shall be grown under climatic conditions similar to those in the locality of the project or acclimatized for a period of 6 months prior to installation.

2.1.4 Quality

Well shaped, well grown, vigorous, healthy plants having healthy and well branched root systems shall be provided. Plants shall be provided free from disease, harmful insects and insect eggs, sun-scald injury, disfigurement and abrasion. Plants shall be provided that are typical of the species or variety and conforming to standards as set forth in ANSI Z60.1 and as specified herein.

2.1.4.1 Shade and Flowering Trees

A height relationship to caliper shall be provided as recommended by ANSI Z60.1. Height of branching should bear a relationship to the size and variety of tree specified and with the crown in good balance with the trunk. Trees shall not be "poled" or the leader removed.

a. Single stem: Trunk shall be reasonably straight and symmetrical with crown and have a persistent main leader.

b. Specimen: A plant shall be provided that is well branched and pruned naturally according to the species. The form of growth desired, which may not be in accordance with natural growth habit, shall be as indicated.

2.1.4.2 Deciduous Shrub

Plants shall be provided that have the height and number of primary stems as recommended by ANSI Z60.1. An acceptable plant shall be well shaped with sufficient well-spaced side branches recognized by the trade as typical for the variety grown in the region.

2.1.4.3 Coniferous Evergreen

Trees shall be provided that have the height-to-spread ratio as recommended by ANSI Z60.1. Trees shall not be "poled" or the leader removed. An acceptable plant shall be exceptionally heavy, well shaped and trimmed to form a symmetrical and tightly knit plant. The form of growth desired shall be as indicated.

2.1.4.4 Broadleaf Evergreen

Plants shall be provided that have ratio of height-to-spread as recommended by ANSI Z60.1. An acceptable plant shall be well shaped and recognized by the trade as typical for the variety grown in the region.

2.1.4.5 Vines

Plants shall be provided with the minimum number of runners and length of runner as recommended by ANSI Z60.1. Plants shall be furnished that have heavy, well developed and balanced top with vigorous well developed root

system and shall be furnished in containers.

2.1.4.6 Palms

Palms shall be in vigorous health with no trunk or rootball damage. Plants shall be boxed or balled and burlaped for transport with fronds tied and wrapped as per industry standards for protection.

2.1.5 Size

Plants shall be furnished in sizes indicated. Palm heights are for brown trunk length. Plants larger in size than specified may be provided at no additional cost to the Government.

2.1.6 Measurement

Plant measurements shall be in accordance with ANSI Z60.1.

2.2 TOPSOIL

No topsoil is available or required for the project site.

2.2.1 Soil Test

A soil test shall be performed for Ph, particle size, chemical analysis and mechanical analysis to establish the quantities and type of soil amendments required to meet local growing conditions for the type and variety of plants specified.

2.3 SOIL AMENDMENTS

Soil amendments consist of lime, fertilizer, bonemeal, organic soil amendments and soil conditioner.

2.3.1 Lime

Lime shall be agricultural limestone and shall have a minimum calcium carbonate equivalent of 90 percent and shall be ground to such a fineness that at least 90 percent will pass a 10-mesh sieve and at least 50 percent will pass a 60-mesh sieve.

2.3.2 Dry Fertilizer

Dry fertilizer shall be commercial grade, free flowing, uniform in composition and conforming to FS 0-F-241. Fertilizer shall be controlled-release fertilizer consisting of nitrogen-phosphorous-potassium ratio: 20 percent nitrogen, 10 percent phosphorous, and 5 percent potassium. Controlled-release fertilizer shall be in tablet form.

2.3.3 Bonemeal

Bonemeal shall be a finely ground, steamed bone product containing from 2 to 4 percent nitrogen and 16 to 40 percent phosphoric acid.

2.3.4 Soil Amendments

2.3.4.1 Peat (Not Applicable)

2.3.4.2 Sand

Sand shall be clean and free of toxic materials and at least 95 percent by weight shall pass a 10-mesh sieve, and 10 percent by weight shall pass a 16-mesh sieve.

2.3.4.3 Rotted Manure

Rotted manure shall be unleached stable or cattle manure containing not more than 25 percent by volume of straw, sawdust, or other bedding materials and containing no chemicals or ingredients harmful to plants. The manure shall be heat treated to kill weed seeds and be free of stones, sticks, and soil.

2.3.4.4 Decomposed Wood Derivatives

Decomposed wood derivatives shall be ground bark, sawdust, or other wood waste material free of stones, sticks, and toxic substances harmful to plants and stabilized with nitrogen and having the following properties:

Particle size	Minimum percent by weight passing
No. 4 mesh screen	95
No. 8 mesh screen	80

Nitrogen Content	Minimum percent based on dry weight
Redwood Sawdust	0.5
Fir Sawdust	0.7
Fir or Pine Bark	1.0

2.3.5 Soil Conditioner

For single use or in combination to meet requirements for planting backfill.

2.3.5.1 Gypsum

Gypsum shall be commercially packaged, free flowing, and a minimum of 95 percent calcium sulfate by volume.

2.3.5.2 Aluminum Sulfate

Aluminum sulfate shall be commercial grade.

2.4 MULCH

Mulch shall be of an inert mulch material and free from weeds, debris, and other deleterious materials. Mulch materials shall be native to the region. Rotted manure is not recommended to be used as a mulch because it would encourage surface rooting of the plant material and weeds.

2.4.1 Rock Mulch

Rock mulch shall be 3/4" minus tan/gold color quarried material that matches adjacent new dormitory landscaping. Submit sample to Contracting Officer for approval.

2.4.2 River Rock

River rock shall be 4 to 12 inches natural smoothed stream bed river-run stone and tan, brown, red, grey, and blue mixed colors. River rock shall match adjacent new dormitory landscaping. Submit sample to Contracting Officer for approval.

2.4.3 Recycled Mulch

Recycled mulch may include compost, tree trimmings, or pine needles with a gradation that passes through a 2-1/2 x 2-1/2 inch screen. It shall be cleaned of all sticks a minimum 1 inchin diameter and plastic materials a minimum 3 inchlength. The material shall be treated to retard the growth of mold and fungi. Other recycled mulch may include peanut shells, pecan shells or coc bean shells.

2.4.4 Shredded Bark

Locally shredded material shall be treated to retard the growth of mold and fungi.

2.4.5 Wood Chips and Ground Bark

Locally chipped or ground material shall be treated to retard the growth of mold and fungi. Gradation: A minimum 2 inch wideby 4 inch long.

2.5 BOULDERS

Boulders shall be of locally available quarried material with colors in tans, browns, and reds. Boulders are to be surface grade or quarried rock. Size shall be as designated on drawings. A sample shall be approved by the Contracting Officer.

2.6 WEED FABRIC (GEOTEXTILE):

2.6.1 Nonwoven Polypropylene

Nonwoven polypropylene shall be spunbonded, water permeable, non-brittle, weigh a minimum 4 ounces per square yard, be a minimum 10 mils thick and come in 6-feet-wide rolls.

2.6.2 Nonwoven polyester

Nonwoven polyester shall be spunbonded, water permeable, non-brittle, weigh a minimum 4 ounces per square yard, be a minimum 10 mils thick and come in 6-feet-wide rolls.

2.7 STAKING MATERIAL

2.7.1 Bracing Stakes

Bracing stakes for tree support shall be pentachlorophenol treated lodge pole pine free of any defects that would impair the strength. Bracing stakes shall be minimum 2" diameter by 8 feetlong and pointed at one end.

2.7.2 Tree Ties

Material for holding tree to stake shall be a commercially available rubber tie.

2.8 WATER

Water shall not contain elements toxic to plant life. Water will be furnished from the project mainline or a Government fire hydrant on the base.

2.9 ANTIDESICCANT

Antidesiccant shall be an emulsion that will provide a film over plant surfaces permeable enough to permit transpiration, and shall not damage the plant.

2.10 PRE-EMERGENT HERBICIDE

Pre-emergent herbicide shall be in a commercially available dry or liquid form that is easily applied and meet all local and state regulations.

2.11 RAISED PLANTERS (Not Applicable)

2.12 LANDSCAPE BERMS AND MOUNDS

Landscape berms shall be formed from clean native soil that is free from foreign or construction debris. Coordinate with CMU wall construction and rough grading. Compact and settle by construction equipment walking. Rough grade shall be ripped to 8 inches to break up construction compaction before placement of berm material.

PART 3 EXECUTION

3.1 EXAMINATION

3.1.1 Verify Grades

The Contracting Officer shall verify the finished grades are as indicated on drawings, and smooth grading has been completed in accordance with Section 02210 GRADING before start of landscape berm placement and other landscape operations.

3.1.2 Underground Obstructions to Planting

The location of underground utilities and facilities shall be verified. Damage to underground utilities and facilities shall be repaired at the Contractor's expense.

3.2 SITE PREPARATION

3.2.1 Finished Grade, Topsoil and Underground Utilities

The Contractor shall verify that finished grades are as indicated on drawings, and that the placing of topsoil, the smooth grading, and the compaction requirements have been completed in accordance with Section 02300 EARTHWORK, prior to the commencement of the planting operation. The location of underground utilities and facilities in the area of the planting operation shall be verified. Damage to underground utilities and facilities shall be repaired at the Contractor's expense.

3.2.2 Layout

Landscape berms, CMU walls, plant material locations, and mulch outlines shall be staked on the project site before any excavation is made. Plant

material, berms, mulch, and boulder locations may be adjusted by the Contracting Officer to meet field conditions.

3.2.3 Protecting Existing Vegetation

When there are established lawns in the planting area, the turf shall be covered and/or protected during planting operations. Existing trees, shrubs, and plant beds that are to be preserved shall be barricaded alond the dripline to protect them during planting operations.

3.3 EXCAVATION

3.3.1 Obstructions Below Ground or Poor Drainage

When obstructions below ground or poor drainage affect the contract operation, proposed adjustments to landscape element locations, type of plant and planting method or drainage correction shall be submitted to and approved by the Contracting Officer.

3.3.2 Plant Pits

Plant pits shall be dug to produce vertical sides and flat, uncompacted bottoms. When pits are dug with an auger and the sides of the pits become glazed, the glazed surface shall be scarified. The size of all plant pits, except for palms, shall be 1-1/2 times rootball depth and a minimum of 4 times rootball depth.

3.3.3 Rough Grading and Landscape Berms

All grades and landscape berms shall follow the designed slope and swales for drainage. All rough grades shall drain away from buildings and be 2" below finish grade of walks, curbs, etc. to allow for mulch placement.

3.3.4 Landscape berms

Landscape berms shall be laid out and constructed as shown on plans and as adjusted to meet field conditions. Coordinate with CMU wall construction and rough grading. Berms shall be constructed in one foot lifts and compacted by construction equipment walking. Final shaping shall be to provide natural contours and transitions to adjacent areas with positive drainage to swales and streets.

3.4 PERCOLATION TEST

Test for percolation shall be done to determine positive drainage of plant pits and beds. The Contracting Officer shall be notified in writing of all soil and drainage conditions detrimental to growth of plant material and shall submit proposal for correcting the condition.

3.5 PLANTING TIMES AND CONDITIONS

For best results, install container grown plant material in the fall before the chance of the first frost or in the spring after the last chance of frost. Planting operations shall be performed only during periods when beneficial results can be obtained. When drought, excessive moisture or other unsatisfactory conditions prevail, the work shall be stopped when directed. Contractor shall schedule planting in the mornings to avoid stressing plants during installation, if the planting schedule calls for installation when the temperature is expected to be 90 degrees Fahrenheit

or greater. When special conditions warrant a variance to the planting operations, proposed planting times shall be submitted to and approved by the Contracting Officer.

3.6 INSTALLATION

3.6.1 Backfill Mixtures

Backfill shall be installed as part of the installation operations. The backfill mixture shall be a proportioned mixture thoroughly mixed by volume of clean native soil and selected organic soil amendment(s) of a decomposed wood derivative nature.

3.6.1.1 Backfill Soil Mix

The basin backfill soil mixture shall be placed in the planting pits during plant installation operations. The basin backfill soil mixture shall be as follows:

Clean Native Soil	=	1 part to mixture
Organic Soil Amendment(s)	=	2 parts to mixture

3.6.2 Setting Plants

Plants shall be set plumb and held in position until sufficient backfill soil mix has been firmly placed around roots or ball. Plants shall be set in relation to surrounding grade so that they are even with the depth at which they were grown in the nursery, or container. Plants root crown shall be set above subgrade as specified on drawings.

3.6.2.1 Palms

Palms shall be installed as per industry standards and detail. Ensure palms are plumb and root balls elevated and protected from damage.

3.6.3 Rain Basins

A depressed rain basin shall be formed around individual plants. Basin shall be excavated from around planting, and shall be level and continuous around plant.

3.6.4 Dry Fertilizer

Dry fertilizer shall be placed in tablet form in the plant pit in the immediate vicinity of the feeding roots in accordance with the manufacturer's recommendations. Space tablets at equal distances from each other and the rootball. The tablets shall be allotted as follows:

Palms	= 8 tablets (21 grams each or equivalent)
24" box container	= 6 tablets (21 grams each or equivalent)
15 gallon container plants	= 4 tablets (21 grams each or equivalent)
5 gallon container plants	= 3 tablets (21 grams each or equivalent)
1 gallon container plants	= 1 tablets (21 grams each or equivalent)

3.6.5 Container-Grown Plants

Non-biodegradable containers shall be removed without damage to the plant or root system. Biodegradable containers shall be split. The backfill mix shall be completed, tamped and watered.

3.6.6 Staking

All trees shall be held in place with two bracing stakes driven vertically into ground and placed on opposite sides. Stakes shall not injure the ball or roots. The tree shall be held firmly between the stakes with a double strand of wire. Chafing guards shall be used where the wire contacts the tree. Nursery stakes shall be untied and removed from stem, if applicable. Care shall be taken so that the stem is supported during this operation and is not allowed to bend to the point of damage before the tree stakes are in place and the tree is secured.

3.7 FINISHING

3.7.1 Pruning

The total amount of foliage shall be pruned by one-fourth to one-third on installed trees and shrubs to compensate for loss of roots and transplanting shock. The typical growth habit of individual plants shall be retained. Clean cuts shall be made flush with the parent trunk. Improper cuts, stubs, dead and broken branches shall be removed. "Headback" cuts at right angles to the line of growth shall not be permitted. Trees shall not be poled or the leader removed, nor shall the leader be pruned or "topped off." Cuts or wounds measuring a minimum 1/2 inch in diameter shall be painted with the specified tree wound dressing.

3.7.2 Pre-emergent Herbicide

Pre-emergent herbicide shall be applied as per manufacturer's specifications on all landscape areas after finish grading and prior to rock mulch installation. Only EPA and State approved herbicides shall be used. The Contracting Officer will be notified regarding pesticided selected and applied.

3.7.3 Weed Fabric (Geotextile):

Before placement of rock mulches, install under all areas to be rock mulched, excluding boulders. All edges shall be heel toed into grade with all material overlaps a minimum of 12". Steel stake as per manufacture's specifications.

3.7.4 Boulders

Boulders shall be placed in locations as shown on drawings. Locations shall be staked on the ground and approved by the Contracting Officer prior to installation. Place boulders prior to installation of mulch and plants. Place boulders individually with appropriate equipment to prevent scarring of boulder surface. Position boulders so that natural weathered surface of boulder is exposed above grade as it was in its natural native setting. Boulders which have been surface scarred by mechanical equipment or excessively chipped or cracked during mining, delivery, storage, or handling will be rejected and removed from the worksite by the contractor.

3.7.5 Mulch

After irrigation installation and rough grading, mulch bed outlines shall be marked on the ground as per drawings and field conditions for approval by the Contracting Officer prior to installation of any mulch or plantings. Pre-emergent herbicide shall be applied before placement of any mulch or

weed fabric.

3.7.5.1 Rock Mulch

Rock mulch shall be placed after pre-emergent application and spread to a uniform depth of a minimum of 2 inches. Install rock to form smooth transitions to existing landscape. Excess stockpiled rock shall be spread out evenly over landscape areas.

3.7.5.2 River Rock

River rock shall be spread and hand placed where necessary to a minimum depth of 8 inches so that grades are not visible after placement of rock. Care shall be taken to insure the rock is well mixed so that smaller rock will fill voids left by larger rock. Excessive cracked, chipped, and broken pieces of river rock and organic debris shall be removed from installation. Location of rock shall be placed in all major drainage swales and at areas as shown on the drawings.

3.7.6 Water

Plants shall be watered as necessary to maintain an adequate supply of moisture within the root zone. Run-off, puddling and wilting shall be prevented.

3.7.7 Antidesiccant Application

Plants requiring further protection shall be sprayed with anti-desiccant in accordance with manufacturer's recommendations.

3.8 MAINTENANCE DURING PLANTING OPERATION

Installed plants shall be maintained in a healthy growing condition. Maintenance operations shall begin immediately after each plant is installed and shall continue until the plant establishment period commences. The maintenance includes irrigation system upkeep, watering, pruning, wound dressing, straightening and other necessary operations. Plant beds and earth water basins shall be kept free of weeds, grass and other undesired vegetation. Plants shall be checked for settlement and shall be reset proper grade as necessary. Run-off, puddling and wilting shall be prevented.

3.9 APPLICATION OF PESTICIDE MATERIAL

When pesticide becomes necessary to remove a disease or pest, a state-certified applicator shall apply required pesticide in accordance with State and EPA label restrictions and recommendations. Hydraulic equipment shall be provided for the liquid application of pesticides with a leak-proof tank, positive agitation methods, controlled application pressure and metering gauges. A pesticide treatment plan shall be provided to the Contracting Officer as specified in paragraph SUBMITTALS.

3.10 RESTORATION AND CLEAN UP

3.10.1 Restoration

Pavements and facilities that have been damaged from the planting operation shall be restored to original condition at the Contractor's expense.

3.10.2 Clean Up

Excess and waste material from the planting operation shall be removed and disposed of off the site. Adjacent paved areas shall be cleared.

3.11 MAINTENANCE PERIOD

3.11.1 Commencement

On completion of the last day of the planting and landscaping operation and all other construction activity including architectural, civil, etc., the maintenance period for maintaining irrigation, hardscape, and installed plants in a healthy growing condition shall commence upon written notice of 'start of maintenance period' from the Contracting Officer. The maintenance period shall be in effect for 90 calendar days.

3.11.2 Maintenance During Establishment Period

3.11.2.1 General

Maintenance of plants and landscape shall include straightening plants, tightening stakes and guying material, repairing tree wrapping, protecting plant areas from erosion, maintaining erosion control material, supplementing mulch, accomplishing wound dressing, removing dead or broken tip growth by pruning, maintaining edging of beds, checking for girdling of plants and maintaining plant labels, watering, weeding, removing and replacing unhealthy plants, and adjusting and maintaining irrigation system as required.

3.11.2.2 Water

The plants shall be watered as necessary to maintain an adequate supply of moisture within the root zone and encourage deep rooting. An adequate supply of moisture is estimated to be the equivalent of one inch of absorbed water per week delivered in the form of natural rain or augmented as required by periodic watering. Run-off, puddling and wilting shall be prevented.

3.11.2.3 Weeding

Grass and weeds in earth water basins and landscape areas shall not be allowed to reach a height of 3 inches before being completely removed, including the root growth.

3.11.2.4 Unhealthy Plants

A plant shall be considered unhealthy or dead when the main leader has died back, or 25 percent of the crown is dead. Determine the cause for an unhealthy plant. Unhealthy or dead plants shall be removed immediately and shall be replaced as soon as seasonal conditions permit.

3.11.2.5 Settlement

Native soil or mulch material shall be added to maintain grade and coverage. Serious settlement affecting the setting of the plant in relation to the depth at which it was grown requires replanting in accordance with paragraph INSTALLATION.

3.11.2.6 Pesticide Treatment

Treatment for diseases or pest shall be in accordance with paragraph APPLICATION OF PESTICIDE MATERIAL.

3.11.2.7 Maintenance Report

A written record shall be furnished to the Contracting Officer of the maintenance work performed, irrigation adjustments and repairs, the quality of plant losses, cause for plant loss and replacements made on each site visit.

3.11.2.8 Maintenance Instruction

Written instructions shall be furnished to the Contracting Officer for year-round care of installed plants and irrigation system.

3.11.3 Replacement Plants

Plants shall be provided for replacement in accordance with paragraph PLANTS. Replacement plants shall be installed in accordance with paragraph INSTALLATION. No extended plant establishment period shall be required for replacement plants. A plant will be replaced in accordance with paragraph WARRANTY.

3.12 FINAL ACCEPTANCE

3.12.1 Preliminary Inspection

Prior to the end of the maintenance period, a preliminary inspection shall be held by the Contracting Officer. Time for the inspection shall be established in writing. A checklist of items to be done will be determined, such as irrigation adjustments, plants to be replaced, mulch replacement, etc. These items will be checked for completion at the Final Inspection.

3.12.2 Final Inspection

At the end of the maintenance period, a final inspection shall be held by the Contracting Officer to determine that deficiencies noted in the preliminary inspection have been corrected. Time for the inspection shall be established in writing. Acceptance of the planting is subject to the guarantee of plant vigor and growth.

-- End of Section --

SECTION TABLE OF CONTENTS

DIVISION 02 - SITE WORK

SECTION 02951

AIRFIELD RUNWAY RUBBER AND PAINT REMOVAL

PART 1 GENERAL

1.1 REFERENCES
1.2 SCOPE
1.2.1 Description of work
1.2.2 Pavement Damage Survey
1.2.3 Methods and Work Areas
1.2.3.1 Rubber Removal
1.2.3.2 Paint Removal
1.3 UNIT PRICES
1.3.1 Measurement
1.3.2 Payment
1.3.3 Aircraft Traffic Interruptions
1.4 SUBMITTALS
1.5 TESTING
1.6 COMPLIANCE WITH REGULATIONS
1.7 ESTABLISHMENT OF WORK ZONES
1.8 OPERATIONS ON THE AIRFIELD
1.8.1 Airfield Access
1.8.1.1 Radio-Controlled Areas
1.8.1.2 Emergencies
1.8.2 Debris Removal
1.8.3 Work Schedule
1.8.4 Environmental Limitations
1.8.5 Night Operations
1.9 EQUIPMENT
1.9.1 Machinery
1.9.2 Lighting
1.9.3 Storage
1.9.4 Government Furnished Materials And Equipment
1.9.4.1 Communications Equipment
1.9.4.2 Water

PART 2 PRODUCTS (Not Applicable)

PART 3 EXECUTION

3.1 RUBBER REMOVAL
3.2 PAINT REMOVAL
3.3 COMPLIANCE TESTING
3.3.1 Quantitive Measuring
3.3.2 Evaluation Zones
3.3.3 Deposits and Stains
3.4 DAMAGE REPAIR AND CLEANUP
3.4.1 Pavement Damage Repair
3.4.2 Clean up

-- End of Section Table of Contents --

SECTION 02951

AIRFIELD RUNWAY RUBBER AND PAINT REMOVAL

PART 1 GENERAL

1.1 REFERENCES

The publications listed below form a part of this specification to the extent referenced. The publications are referred to in the text by basic designation only.

AIR FORCE (AF)

AFI 13-213	Airfield Management
AFI 32-1026	Planning and Design of Airfields
AFI 32-1042	Standards for Marking Airfields
AFMAN 32-1076	Visual Air Navigation Systems
FJMAN 32-1013v1	Airfield and Heliport Planning Criteria
AFMAN 32-1013v2	Planning Criteria and Waivers for Airfield Support Facilities
AF ETL 94-1	Standard Airfield Pavement Marking Schemes

FEDERAL AVIATION ADMINISTRATION (FAA)

FAA AC 150/5370-2C	Operational Safety on Airports During Construction
FAA AC 150/5340-1G	Standards for Airport Markings

UNITED STATES CODE (U.S.C)

42 U.S.C. 6901, et seq.,	Resource Conservation Recovery Act
42 U.S.C. 9601, et seq.,	Comprehensive Environmental Response, Compensation, and Liability Act
49 U.S.C. 1801, et seq.,	Hazardous Materials Transportation Act

1.2 SCOPE

1.2.1 Description of work

The work specified by this section consists of furnishing all labor, equipment, tools, appliances, and materials required to remove 85 percent of the rubber and paint buildup from 100 percent of the rubber covered and

painted area within a designated area of runway, taxiway, apron pavement. The rubber and paint removal is to be completed without damage to the pavement surface, joints, and joint and crack seals, or any other government property. The term "paint" used herein may include obsolete paint markings and/or loose and poorly bonded paint buildup.

1.2.2 Pavement Damage Survey

The Contracting Officer and the Contractor shall jointly inspect the work area before work commences. Any existing damage to the pavement systems shall be documented at that time. The Contractor shall repair damage incurred during the contracted operations in accordance with paragraph "3.4.1 Pavement Damage Repair".

1.2.3 Methods and Work Areas

1.2.3.1 Rubber Removal

Rubber buildup shall be removed from the designated rubber-covered area in accordance with paragraph "3.1 RUBBER REMOVAL". The rubber-covered area in each runway touchdown zone is an imaginary rectangle with sides parallel to the centerline and ends transverse to the centerline. Within the rectangle, the rubber deposits overlap and the exposed pavement texture comprises less than 80 percent of the total area. The rubber-covered area does not include the portion of pavement outside the central rubber buildup zone where the rubber marks are intermittent and more than 80 percent of the pavement texture is exposed. Rubber deposits are not to be removed outside the designated rubber-covered area.

1.2.3.2 Paint Removal

Paint shall be removed in accordance with paragraph "3.2 PAINT REMOVAL". The locations and configurations of markings to be removed are indicated in the contract drawings.

1.3 UNIT PRICES

1.3.1 Measurement

The unit of measurement for pavement rubber and paint removal shall be the number of square yards of pavement cleaned and accepted. Lead based paint testing shall be compensated for based on the number of tests performed as specified herein or as directed.

1.3.2 Payment

The quantities of rubber buildup and paint removed from the pavement surfaces will be paid by contract unit prices for the base year Line Item 0024AB, "RUBBER & PAINT REMOVAL" of the Pricing Schedule. Lead based paint testing shall be paid for by the contract unit price for the base year Line Item 0004AD, "LEAD BASED PAINT TESTING". Payment will constitute full compensation for all labor, materials, tools, equipment, appliances, disposal, and the performance of all work involved in removing the rubber and paint from the designated areas.

1.3.3 Aircraft Traffic Interruptions

The Contractor shall specify on the bid schedule an hourly rate for aircraft traffic interruption. Time measurement for traffic interruptions

shall begin with the notification to the Contractor to clear the runway and shall end ten minutes after the Contractor is notified that he can re-occupy the runway. The Contractor shall be paid for a minimum of one hour for each interruption. Interruptions longer than one hour shall be calculated on the half hour: i.e., a delay over one hour but less than one and one-half hours would be paid as one and one-half hours; a delay over one and one-half hours but less than two hours would be paid as two hours.

1.4 SUBMITTALS

Government approval is required for submittals with a "GA" designation: submittals having an "FIO" designation are for information only. The following shall be submitted in accordance with Section 01330 SUBMITTAL PROCEDURES:

SD-01 Data

Rubber Removal Equipment; FIO.

A list of construction equipment including item names and descriptions.

SD-08 Statements

Runway Rubber Removal; FIO.

Statements regarding the suitability of materials, personnel, and methods proposed to accomplish the work.

Waste Identification and Disposal Plant

Plant proposed actions regarding waste collection, control, identification, and disposal. The plan will address disposal methods and requirements for hazardous and non-hazardous wastes.

Lead-based paint removal

If lead-based paint is identified for removal, the Contractor shall submit a plan of action detailing the proposed procedures for lead-based paint removal, including all air and bulk sampling and analysis, for approval by the Contracting Officer's environmental representative. The plan shall include all procedures and equipment required for worker protection by the Occupational Safety and Health Administration (OSHA), as well as local and state requirements.

1.5 TESTING

The Contractor shall test all equipment and demonstrate on the designated pavement work areas the proposed method to be used to remove rubber and paint.

The Contracting Officer will designate a test strip within the work area. The test strip shall be as wide as the full operating width of the equipment and at least 50 feet long. The test strip shall be long enough to determine the operating parameters of the vehicle(s) and equipment to be used for the work. The test strip shall be used to demonstrate the effectiveness of the Contractor's methods and equipment to satisfactorily remove rubber and paint deposits from the pavement surfaces at the specified removal rate without damaging the pavement surface. Satisfactory removal shall be determined in accordance with section "3.3 COMPLIANCE

TESTING" of this specification. The Contracting Officer and/or Contracting Officer's representative(s) shall be present at the test area to examine the pavement texture obtained on the test strip. The test strip shall be the measure of performance required of the Contractor for the rubber and paint removal project.

The Contractor shall not proceed with the work until the results of the test strip are satisfactory to the Contracting Officer or authorized representative.

1.6 COMPLIANCE WITH REGULATIONS

The Contractor shall ensure that any rubber and paint removal process is conducted in strict compliance with all local, state, and Federal environmental statutes and regulations, including, but not limited to, regulations promulgated under the Resource Conservation Recovery Act, 42 U.S.C. 6901, et seq., and the Comprehensive Environmental Response, Compensation, and Liability Act, 42 U.S.C. 9601, et seq.,

1.7 ESTABLISHMENT OF WORK ZONES

The Contractor shall provide all cones, barriers, lights, signs, placards, flags, and flagging personnel necessary to establish an adequate work zone and control traffic in and around the work zone. The Contractor shall establish and maintain work zones as necessary throughout the period of the contract, prominently identifying potential hazards and dangers to personnel and traffic in or near the work area.

The Contractor shall comply with AFI 32-1042, AF ETL 94-1, and FAA AC 150/5370-2C for temporary pavement closures on airfields.

1.8 OPERATIONS ON THE AIRFIELD

1.8.1 Airfield Access

Work will be performed in the controlled zones of the base or the airfield. All access to or through the base shall be coordinated with the Contracting Officer or authorized representative. All access to or through the airfield shall be coordinated with the Chief of Airfield Management.

1.8.1.1 Radio-Controlled Areas

When within the radio-controlled areas of the airfield, the Contractor shall maintain continuous verbal and visual contact with the control tower. The Contractor shall verbally inform the control tower and the Chief of Airfield Management when the work has been completed and all equipment, labor and materials have been removed from the airfield.

1.8.1.2 Emergencies

It is the intention of the Government to close the runway to all aircraft traffic while rubber and paint is being removed. However, work may be interrupted to provide a runway for aircraft in an emergency or when a special or unscheduled mission is assigned. If the runway is needed for aircraft operations, the Contractor shall remove all equipment from the operational surfaces of the airfield and beyond the hold line within 15 minutes of notification to clear the runway. A scheduled landing or departure that has been identified to the Contractor prior to the start of the Contractor's work shift shall not be considered an interruption.

1.8.2 Debris Removal

The Contractor shall clear debris from the runway and roadway) surface as the work proceeds.

1.8.3 Work Schedule

The Contractor must adhere to the preapproved schedule for execution of the work, weather permitting, since runway closures must be coordinated in advance. If the Contractor's schedule is delayed by weather conditions or mechanical equipment breakdown, the Contractor shall notify the Contracting Officer and a new work schedule will be established. The Contracting Officer's representative shall be responsible for coordinating the runway closure schedule with the using agencies.

1.8.4 Environmental Limitations

Rubber and paint removal methods that use water or chemicals shall not be permitted when the air temperature is at 40 degree F and falling or the pavement surface temperature is at 35 degree F or less and falling.

1.8.5 Night Operations

Night work must be approved in advance by the Contracting Officer. The Government reserves the right to accept or reject night work the day following night activities by the Contractor

1.9 EQUIPMENT

1.9.1 Machinery

The equipment used in the removal process shall be mounted on pneumatic tires and shall remove deposits of rubber and paint without causing damage to pavement surfaces, joints, or joint and crack seal material.

1.9.2 Lighting

The Contractor shall furnish all lighting necessary for night operations. Lighting will be directed or shaded to prevent interference with aircraft, the Air Traffic Control tower, and other base operations. The Contractor shall be capable of removing all lighting equipment from the runway within 15 minutes of notification of an emergency.

1.9.3 Storage

The Contractor shall store equipment and materials only in areas approved by the Contracting Officer

1.9.4 Government Furnished Materials And Equipment

1.9.4.1 Communications Equipment

The Government will furnish a radio to the Contractor for the purpose of maintaining verbal communications with the Control Tower during each work day. The Contractor shall assume responsibility for the radio while it is in his possession and shall reimburse the Government for the cost of repair or replacement if the radio is lost, damaged, or destroyed.

1.9.4.2 Water

Water will be furnished at no cost to the Contractor. The water supply shall be a fire hydrant designated by the Contracting Officer and located within a reasonable proximity to the work area. The Contractor shall install a gate valve and back-flow prevention device on the fire hydrant tap. The Contractor shall furnish all equipment, material, and labor necessary to obtain and deliver water from the designated fire hydrant to the work area(s).

PART 2 PRODUCTS (Not Applicable)

PART 3 EXECUTION

3.1 RUBBER REMOVAL

Rubber shall be removed by high pressure water and/or detergents. The Contractor may inject sand as an abrasive into the high pressure water system. The use of environmentally acceptable chemical agents or high velocity impact removal shall be considered on a case-by-case basis. Use of any chemicals or impact abrasive in the removal process must be approved in advance by the Contracting Officer. The Government specifically reserves the right to reject the use of any rubber removal process which the Contracting Officer determines may pose unnecessary risks to aircraft due to foreign object damage (FOD) potential, human health, or the environment as a result of its use, storage, or disposal. Rubber deposits shall be removed at a minimum rate of 10,000 square feet per hour.

3.2 PAINT REMOVAL

Paint shall be removed by high pressure water and/or grinding. The Contractor may inject sand as an abrasive into the high pressure water system. The use of environmentally acceptable chemical agents or high velocity impact removal shall be considered on a case-by-case basis. Use of any chemicals or impact abrasive in the removal process must be approved in advance by the Contracting Officer. The Government specifically reserves the right to reject the use of any paint removal process which the Contracting Officer determines may pose unnecessary risks to aircraft due to foreign object damage (FOD) potential, human health, or the environment, as a result of its use, storage, or disposal. Painted markings equal to or greater than three feet wide shall be removed at a minimum rate of 1000 square feet per hour.

3.3 COMPLIANCE TESTING

Compliance with the 85 percent removal from 100 percent of the area shall be determined by direct testing within the designated work area.

3.3.1 Quantitive Measuring

A One square foot section of transparent material inscribed with a grid of 100 equal squares shall be used as a tool for quantitative measure of the 85 percent removal. Place the grid pattern on the pavement surface at random locations. Then count the squares which contain rubber and paint deposits. The number of squares containing rubber and paint deposits shall not exceed 15 in each of the randomly selected locations.

3.3.2 Evaluation Zones

Each work area designated for rubber and paint removal shall be divided into at least four equal zones for the purpose of compliance testing. Within each zone, a minimum of seven random locations shall be evaluated. At least 85 percent of the randomly selected areas within each zone must meet the requirement described in the paragraph Quantitive Measuring. Each zone shall be evaluated independently. A zone not meeting the 85 percent removal requirement shall be recleaned by the Contractor at the Contractor's expense.

3.3.3 Deposits and Stains

Deposits of rubber or rubber buildup and paint are defined as any surface deposit that can be removed by scratching the deposit with a flat sharp object such as a pocket knife without damaging the pavement surface. Stains are defined as materials in the pavement surface microtexture that cannot be removed without damaging the pavement surface. Stain is generally embedded in the surface of the pavement below the horizontal plane of the surface texture. The Contractor is not responsible for stain removal.

3.4 DAMAGE REPAIR AND CLEANUP

3.4.1 Pavement Damage Repair

Any damage to the pavement surface, joints, joint and crack seals, or other Government property incurred during the performance of the work shall be repaired by the Contractor at the Contractor's expense. Repair methods and materials shall be approved by the Contracting Officer prior to performance of the repairs. Repairs shall be completed within the performance period for the contract.

3.4.2 Clean up

The Contractor shall remove from the airfield all debris, waste, and by-products generated by the rubber and paint removal operations and shall dispose of these wastes in strict compliance with all applicable state, local, and Federal environmental statutes and regulations, including, but not limited to, regulations promulgated under the Resource Conservation Recovery Act, 42 U.S.C. 6901, et seq., the Comprehensive Environmental Response, Compensation, and Liability Act, 42 U.S.C. 9601, et seq., and the Hazardous Materials Transportation Act, 49 U.S.C. 1801, et seq.,.

-- End of Section --

SECTION TABLE OF CONTENTS

DIVISION 02 - SITE WORK

SECTION 02935

TURF

PART 1 GENERAL

1.1 QUALIFICATIONS
1.2 REFERENCES
1.3 MEASUREMENT AND PAYMENT
1.4 SUBMITTALS
1.5 SOURCE INSPECTIONS
1.6 DELIVERY, INSPECTION, STORAGE, AND HANDLING
1.6.1 Delivery
1.6.1.1 Protection
1.6.1.2 Topsoil
1.6.1.3 Soil Amendments
1.6.1.4 Pesticide
1.6.2 Inspection
1.6.3 Storage
1.6.4 Handling
1.6.4.1 Materials
1.6.4.2 Time Limitation
1.7 UNIT PRICES
1.7.1 Measurement
1.7.2 Payment

PART 2 PRODUCTS

2.1 MATERIALS
2.1.1 Seed (Not Applicable)
2.1.2 Sod
2.1.2.1 Sod Classification
2.1.2.2 Grass Species
2.1.2.3 Quality
2.1.2.4 Thickness
2.1.2.5 Anchors
2.1.3 Sprigs (Not Applicable)
2.1.4 Soil Amendments
2.1.4.1 Lime
2.1.4.2 Fertilizer
2.1.4.3 Organic Soil Amendments
2.1.4.4 Soil Conditioner/Fertilizer
2.1.4.5 Gypsum
2.1.4.6 Porous Silica Aggregate
2.1.4.7 Iron Sulfate
2.1.5 Mulch (Not Applicable)
2.1.6 (Not Used)
2.1.7 Water
2.1.8 Pesticide
2.1.9 Erosion Control Material (Not Applicable)

PART 3 EXECUTION

3.1 SODDING TIMES AND CONDITIONS
3.1.1 Seeding Time (Not Applicable)
3.1.2 Sodding Time
3.1.3 Sprigging Time (Not Applicable)
3.1.4 Turfing Conditions
3.2 SITE PREPARATION
3.2.1 Grading
3.2.1.1 Soil Test
3.2.2 Application of Soil Amendments
3.2.2.1 Soil Sulfur
3.2.2.2 Fertilizer
3.2.2.3 Compost
3.2.2.4 Porous Silica Aggregate
3.2.2.5 Iron Sulfate
3.2.3 Application of Soil Amendments Using Soil Conditioner/Fertilizer
3.2.3.1 Soil Sulfur
3.2.3.2 Soil Conditioner/Fertilizer
3.2.3.3 Porous Silica Aggregate
3.2.4 Tillage
3.2.4.1 Minimum Depth
3.2.5 Finished Grading
3.2.5.1 Preparation
3.2.5.2 Turf Area Debris
3.2.5.3 Protection
3.3 SEEDING (Not Applicable)
3.4 SODDING
3.4.1 General
3.4.2 Placing Sod
3.4.3 Finishing
3.4.4 Watering Sod
3.5 SPRIGGING (Not Applicable)
3.6 EROSION CONTROL (Not Applicable)
3.7 APPLICATION OF PESTICIDE
3.8 RESTORATION AND CLEAN UP
3.8.1 Restoration
3.8.2 Clean Up
3.9 PROTECTION OF TURFED AREAS
3.10 TURF ESTABLISHMENT PERIOD
3.10.1 Commencement
3.10.2 Satisfactory Stand of Turf
3.10.2.1 Sodded Area
3.10.3 Maintenance During Establishment Period
3.10.3.1 General
3.10.3.2 Mowing
3.10.3.3 Watering
3.10.3.4 Post-Fertilization
3.10.3.5 Pesticide
3.10.3.6 Repair
3.10.3.7 Maintenance Report
3.11 FINAL ACCEPTANCE
3.11.1 Preliminary Inspection
3.11.2 Final Inspection

-- End of Section Table of Contents --

SECTION 02935

TURF

PART 1 GENERAL

1.1 QUALIFICATIONS

All work shall be done by an experienced crew familiar with horticulture and industry methods and standards for sodding and turf installation.

1.2 REFERENCES

The publications listed below form a part of this specification to the extent referenced. The publications are referred to in the text by basic designation only.

AGRICULTURAL MARKETING SERVICE (AMS)

AMS-01	(Sep 1977; Amended Oct 29, l986) Federal Seed Act Regulations (Part 20): Certified Seed Regulations

AMERICAN SOCIETY FOR TESTING AND MATERIALS (ASTM)

ASTM D 977	(1986) Emulsified Asphalt
ASTM D 2028	(1976; R 1986) Cutback Asphalt (Rapid-Curing Type)
ASTM D 2607	(1969) Peats, Mosses, Humus, and Related Products

FEDERAL SPECIFICATIONS (FS)

FS O-F-241	(Rev D) Fertilizers, Mixed, Commercial
FS JJJ-S-181	(Rev B) Seeds, Agricultural

1.3 MEASUREMENT AND PAYMENT

Measurement shall be the number of square feet of turf placed and accepted. There

1.4 SUBMITTALS

Government approval is required for submittals with a "GA" designation; submittals having an "FIO" designation are for information only. The following shall be submitted in accordance with Section 01330 SUBMITTAL DESCRIPTIONS:

SD-01 Data

Manufacturer's Literature; FIO.

Manufacturer's literature discussing physical characteristics, application and installation instructions for erosion control material, and for chemical treatment material.

SD-07 Schedules.

Equipment List; FIO

A list of proposed pesticide application, seeding and mulching equipment to be used in performance of turfing operation, including descriptive data and calibration tests.

SD-08 Statements

Delivery; FIO.

Delivery schedule, at least 10 days prior to the intended date of the first delivery.

Application of Pesticide; FIO.

Pesticide treatment plan with proposed sequence of pesticide treatment work. The pesticide trade name, chemical composition, formulation, concentration, application rate of active ingredients and method of application for all materials; and the name and state license number of the state certified applicator shall be included.

Maintenance Report; FIO.

Written record of maintenance work performed.

Turf Establishment Period; FIO.

Written calendar time period for the turf establishment period. When there is more than one turf establishment period, the boundaries of the turfed area covered for each period shall be described.

SD-13 Certificates

Certificates of compliance certifying that materials meet the requirements specified, prior to the delivery of materials. Certified copies of the reports for the following materials shall be included (FIO):

a. Seed: (Not Applicable)

b. Sod: For species, mixture percentage, percent purity, field location.

c. Sprigs: (Not Applicable)

d. Fertilizer: For chemical analysis, composition percent.

e. Agricultural Limestone: (Not Applicable)

f. Peat: (Not Applicable)

g. Asphalt Adhesive: (Not Applicable)

h. Pesticide Material: For EPA and state registration number and registered uses.

i. Topsoil: For Ph, particle size, chemical analysis and mechanical analysis.

1.5 SOURCE INSPECTIONS

Sod material will be subject to inspection by the Contracting Officer at the growing site.

1.6 DELIVERY, INSPECTION, STORAGE, AND HANDLING

1.6.1 Delivery

1.6.1.1 Protection

Sod shall be protected from drying out and contamination during delivery.

1.6.1.2 Topsoil

A soil test shall be provided for topsoil delivered to the site.

1.6.1.3 Soil Amendments

Soil amendments shall be delivered to the site in the original, unopened containers bearing the manufacturer's chemical analysis. In lieu of containers, soil amendments may be furnished in bulk. A chemical analysis shall be provided for bulk deliveries.

1.6.1.4 Pesticide

Pesticide material shall be delivered to the site in the original, unopened containers bearing legible labels indicating the Environmental Protection Agency (EPA) and state registration number and the manufacturer's registered uses.

1.6.2 Inspection

Sod shall be inspected upon arrival at the job site by the Contracting Officer for conformity to type and quality in accordance with paragraph MATERIALS. Other materials shall be inspected for meeting specified requirements and unacceptable materials shall be removed from the job site.

1.6.3 Storage

Materials shall be stored in areas designated by the Contracting Officer. Sod shall be installed immediately upon delivery. Temporary stored sod shall be lightly sprinkled with water, covered with moist burlap, straw, or other covering and protected from exposure to wind and direct sunlight until planted. Covering for sod shall allow air to circulate and prevent internal heat from building up. Fertilizer shall be stored in cool, dry locations away from contaminants. Chemical treatment materials shall not be stored with other landscape materials.

1.6.4 Handling

1.6.4.1 Materials

Care shall be taken to avoid injury to sod or seed. Except for bulk deliveries, materials shall not be dropped or dumped from vehicles.

1.6.4.2 Time Limitation

a. Sod: Limitation of the time between harvesting and placing of sod shall be 36 hours.

1.7 UNIT PRICES

1.7.1 Measurement

The amount paid will be for completion of planting/installation of all turfed areas inspected and approved as accepted work. Turfed area shall be quantified in sqaure feet.

1.7.2 Payment

Quantities specified above will be paid at respective contract unit prices. Payment shall constitute full compensation for completion of turf installation. Measurement; for furnishing all materials, equipment, plant, and tools; and for labor and other incidentals necessary to complete work required.

PART 2 PRODUCTS

2.1 MATERIALS

2.1.1 Seed (Not Applicable)

2.1.2 Sod

2.1.2.1 Sod Classification

State-certified Nursery-grown sod shall be provided as classified by applicable state laws. Each individual sod section shall be of a size to permit rolling and lifting without breaking.

2.1.2.2 Grass Species

Grass species shall be proportioned as follows or alternate as recommended by local cooperative extension service personnel.

Botanical Name	Common Name	Mixture Percent
Cynodon dactylon Hybrid/	Hybrid Bermuda	100%

2.1.2.3 Quality

The sod shall be relatively free of thatch, diseases, nematodes, soil-borne insects, weeds or undesirable plants, stones larger than 2 inches in any dimension, woody plant roots and other material detrimental to a healthy stand of turf. Sod that has become dry, moldy, or yellow from heating, or has irregularly shaped pieces of sod and torn or uneven ends shall be rejected.

2.1.2.4 Thickness

Sod shall be machine cut to a uniform thickness of 1-1/4 inches within a

tolerance of 1/4 inch, excluding top growth and thatch. Measurement for thickness shall exclude top growth and thatch.

2.1.2.5 Anchors

Sod anchors shall be as recommended by the sod supplier.

2.1.3 Sprigs (Not Applicable)

2.1.4 Soil Amendments

Soil amendments shall consist of lime, fertilizer, organic soil amendments and manufactured soil conditioners meeting the following requirements.

2.1.4.1 Lime

Lime shall be agricultural limestone and shall have a minimum calcium carbonate equivalent of 90 percent and shall be ground to such a fineness that at least 90 percent will pass a 10-mesh sieve and at least 50 percent will pass a 60-mesh sieve.

2.1.4.2 Fertilizer

Fertilizer shall be commercial grade, free flowing, uniform in composition and conforming to FS O-F-241. Granular Fertilizer composition and rate of application to be as recommended by the soil test.

2.1.4.3 Organic Soil Amendments

a. Topsoil: The existing surface soil shall be stripped and stockpiled on the site in accordance with Section 02210 GRADING. When required beyond that available from stripping, the topsoil shall be delivered. Delivered topsoil shall conform to topsoil requirements specified in Section 02210 GRADING, and shall be amended as recommended by soil test.

b. Peat: Peat moss or humus derived from a bog, swampland or marsh shall conform to ASTM D 2607.

c. Sand: Clean, free of toxic materials; 95 percent by weight shall pass a 10-mesh sieve and 10 percent by weight shall pass a 16-mesh sieve.

d. Rotted Manure: Well rotted, horse or cattle manure containing a maximum 25 percent by volume of straw, sawdust, or other bedding materials, free of stones, sticks, soil and containing no chemicals or ingredients harmful to plants.

e. Decomposed Wood Derivatives: Ground bark, sawdust, or other wood waste material free of stones, sticks, soil, and toxic substances harmful to plants, stabilized with nitrogen and having the following properties:

Particle Size: Minimum percent by weight passing:

Screen Size	Percent
No. 4 mesh Screen	95
No. 8 mesh screen	80

Nitrogen Content: Minimum percent based on dry weight:

Material	Percent
Redwood Sawdust	0.5
Fir Sawdust	0.7
Fir or Pine Bark	1.0

f. Calcined Clay: (Not Applicable)

2.1.4.4 Soil Conditioner/Fertilizer

Soil conditioner and fertilizer shall be derived from organic materials such as decomposed animal, vegetable, and mineral matter, which has been composted, is relatively dry, friable, and pass a one inch sieve. The conditioner shall not contain poultry, animal or human waste, pathogenic viruses, fly larvae, insecticides, fungicides, and poisonous chemicals that would inhibit plant growth. The conditioner shall be the following guaranteed chemical analysis:

Ingredient	Percentage (Minimum)
Nitrogen	5
Phosphoric Acid	3
Water Soluble Potash	1
Humus	50
Humic Acids	15
Soluble Metallic Iron	1

2.1.4.5 Gypsum

Gypsum shall be commercially packaged, free flowing, minimum 95 percent calcium sulfate by volume.

2.1.4.6 Porous Silica Aggregate

Porous silica aggregate shall be of commercial grade diatomaceous earth and be free flowing.

2.1.4.7 Iron Sulfate

Iron sulfate shall be commercially packaged, free flowing with an analysis of 19% Fe and 14% S.

2.1.5 Mulch (Not Applicable)

2.1.6 (Not Used)

2.1.7 Water

Water shall be from a designated reclaimed water source.

2.1.8 Pesticide

Pesticide shall be insecticide, herbicide, fungicide, nematocide, rodenticide and miticide. For the purpose of this specification, soil fumigant shall have the same requirements as a pesticide. The pesticide

material shall be EPA and state registered and approved insecticide, herbicide, fungicide, nematocide, rodenticide, miticide, and soil fumigant.

2.1.9 Erosion Control Material (Not Applicable)

PART 3 EXECUTION

3.1 SODDING TIMES AND CONDITIONS

3.1.1 Seeding Time (Not Applicable)

3.1.2 Sodding Time

Sod shall be placed from April to June for spring planting and from September to October for fall planting. Sod placement shall be timed to allow enough time for sod establishment before dormancy.

3.1.3 Sprigging Time (Not Applicable)

3.1.4 Turfing Conditions

Turf operations shall be performed only during periods when beneficial results can be obtained. When drought, excessive moisture or other unsatisfactory conditions prevail, the work shall be stopped when directed. When special conditions warrant a variance to the turf operations, proposed times shall be submitted to and approved by the Contracting Officer.

3.2 SITE PREPARATION

3.2.1 Grading

The Contracting Officer shall verify that finished grades are as indicated on drawings, and the placing of topsoil and the smooth grading has been completed in accordance with Section 02210 GRADING.

3.2.1.1 Soil Test

A soil test shall be performed for pH, chemical analysis and mechanical analysis to establish the quantities and type of soil amendments required to meet local and site specific growing conditions for the type and variety of turf specified.

3.2.2 Application of Soil Amendments

The following soil amendments shall be incorporated into the soil if a manufactured soil conditioner/fertilizer is not utilized:

3.2.2.1 Soil Sulfur

Soil Sulfur shall be applied at the rate recommended by the soil test, estimated rate 32.8 pounds per 1000 square feet. Sulfur shall be incorporated into the soil to a minimum depth of 6 inches or may be incorporated as part of the tillage operation.

3.2.2.2 Fertilizer

Fertilizer shall be applied at the rate recommended by the soil test. Fertilizer shall be incorporated into the soil to a minimum depth of 6

inches or may be incorporated as part of the tillage or hydroseeding operation.

3.2.2.3 Compost

A nitrogen stabilized compost shall be spread uniformly over the soil at the rate of 4.0 cu yds per 1000 sq. ft. and thoroughly incorporated by tillage into the soil to a minimum depth of 6 inches.

3.2.2.4 Porous Silica Aggregate

Porous silica aggregate shall be spread uniformly over the soil at the rate of 500 lbs per 1000 sq. ft

3.2.2.5 Iron Sulfate

Iron sulfate shall be applied and incorporated uniformly into the soil at the rate of 5 lbs per 1000 sq. ft.

3.2.3 Application of Soil Amendments Using Soil Conditioner/Fertilizer

The following soil amendment ratios shall be incorporated into the soil as based on soil test recommendations.

3.2.3.1 Soil Sulfur

Soil sulfur shall be applied at the rate recommended by the soil test, estimated rate 32.8 pounds per 1000 square feet. Sulfur shall be incorporated into the soil to a minimum depth of 6 inches or may be incorporated as part of the tillage operation.

3.2.3.2 Soil Conditioner/Fertilizer

Soil conditioner/fertilizer shall be applied evenly at the rate of 200 lbs per 1000 sq. ft., and thoroughly incorporated as into the soil to a minimum depth of 6 inches or may be incorporated as part of the tillage operation.

3.2.3.3 Porous Silica Aggregate

Porous silica aggregate shall be spread uniformly over the soil at the rate of 500 lbs per 1000 sq. ft.

3.2.4 Tillage

3.2.4.1 Minimum Depth

Soil within turf areas shall be tilled minimum depth of 6 inches. Rototiller shall be used where soil conditions and size of area permit.

3.2.5 Finished Grading

3.2.5.1 Preparation

Turf areas shall be filled as needed or have surplus soil removed to attain the finished grade. Drainage patterns shall be maintained as indicated on drawings. Turf areas compacted by construction operations shall be completely pulverized by tillage. Soil used for repair of erosion or grade deficiencies shall conform to topsoil requirements specified in Section 02210 GRADING. Finished grade shall be 1 inch below the adjoining grade of

any surfaced area. New surfaces shall be blended to existing areas.

3.2.5.2 Turf Area Debris

Turf areas shall have debris and stones larger than 1 inch in any dimension removed from the surface.

3.2.5.3 Protection

Finished graded areas shall be protected from damage by vehicular or pedestrian traffic and erosion.

3.3 SEEDING (Not Applicable)

3.4 SODDING

3.4.1 General

Areas shall be sodded as indicated. Adequate soil moisture shall be ensured prior to sodding by spraying water on the area to be sodded and wetting the soil to a minimum depth of 1 inch.

3.4.2 Placing Sod

Rows of sod shall be placed parallel to and tightly against each other. Joints shall be staggered laterally. The sod strips shall not be stretched or overlapped. All joints shall be butted tight. Voids and air drying of roots shall be prevented. On long slopes, sod shall be laid at right angles to slopes. In ditches, sod shall be laid at right angles to the flow of water. When required, the sod shall be anchored by placing anchors a minimum distance of 2 feet on center with a minimum of 2 anchors per sod section.

3.4.3 Finishing

Air pockets shall be eliminated and a true and even surface shall be provided by tamping or rolling the sod in place. Displacement of the sod shall be assured by knitting of sod to the soil. Frayed edges shall be trimmed and holes or missing corners shall be patched in the sod.

3.4.4 Watering Sod

Watering shall be started immediately after completing each day of sodding. Water shall be applied at a rate sufficient to ensure moist soil conditions to a minimum depth of 1 inch. Run-off and puddling shall be prevented. Watering shall continue until sod is well rooted up to a maximum of 60 days.

3.5 SPRIGGING (Not Applicable)

3.6 EROSION CONTROL (Not Applicable)

3.7 APPLICATION OF PESTICIDE

When pesticide becomes necessary to remove a pest or disease, a state-certified applicator shall apply required pesticides in accordance with EPA label restrictions and recommendations and state registration limitations; Hydraulic equipment shall be provided for the liquid application of pesticides with a leak-proof tank, positive agitation

methods, controlled application pressure and metering gauges. A pesticide plan shall be provided to the Contracting Officer as stated in paragraph SUBMITTALS.

3.8 RESTORATION AND CLEAN UP

3.8.1 Restoration

Existing turf areas, pavements and facilities that have been damaged from the turfing operation shall be restored to original condition at Contractor's expense.

3.8.2 Clean Up

Excess and waste material shall be removed from the planting operation and shall be disposed of off the site. Adjacent paved areas shall be cleaned.

3.9 PROTECTION OF TURFED AREAS

Immediately after turfing, the area shall be protected against traffic or other use by erecting barricades and providing signage as required, or as directed by the Contracting Officer.

3.10 TURF ESTABLISHMENT PERIOD

3.10.1 Commencement

The Turf Establishment Period for establishing a healthy stand of turf shall begin on the first day of work under this contract and shall end 60 days after the last day of turfing operations required by this contract. Written calendar time period shall be furnished to the Contracting Officer for the Turf Establishment Period. When there is more than one turf establishment period, describe the boundaries of the turfed area covered for each period.

3.10.2 Satisfactory Stand of Turf

3.10.2.1 Sodded Area

A satisfactory stand of turf from the sodding operation is defined as vigorous living sod uniform in rooting and top growth.

3.10.3 Maintenance During Establishment Period

3.10.3.1 General

Maintenance of the turfed areas shall include eradicating weeds, eradicating insects and diseases, protecting embankments and ditches from erosion, maintaining erosion control materials and mulch, protecting turfed areas from traffic, mowing, watering, and post-fertilization.

3.10.3.2 Mowing

a. Lawn Areas: Lawn areas shall be mowed to a minimum height as recommended by the seed producer when the average height of the turf becomes 2 inches. Clippings shall be removed when the amount of cut turf is heavy enough to damage the turfed areas.

b. Field Areas: Field areas shall be mowed once during the season to a

minimum height of 3 inches.

3.10.3.3 Watering

Watering shall be at intervals to obtain a moist soil condition to a minimum depth of 1 inch. Frequency of watering and quantity of water shall be adjusted in accordance with the growth of the turf. Run-off, puddling and wilting shall be prevented.

3.10.3.4 Post-Fertilization

Nitrogen carrier fertilizer shall be applied at the rate of 7 pounds per 1000 square feet after the first month and again every three months to the final acceptance. The application shall be timed prior to the advent of winter dormancy and shall avoid excessively high nitrogen levels.

3.10.3.5 Pesticide

Treatment for disease or pest shall be in accordance with paragraph APPLICATION OF PESTICIDE.

3.10.3.6 Repair

The Contractor shall re-establish as specified herein, eroded, damaged or barren areas. Mulch shall also be repaired or replaced as required.

3.10.3.7 Maintenance Report

A written record shall be furnished to the Contracting Officer of the maintenance work performed.

3.11 FINAL ACCEPTANCE

3.11.1 Preliminary Inspection

Prior to the completion of the Turf Establishment Period, a preliminary inspection shall be held by the Contracting Officer. Time for the inspection shall be established in writing. The acceptability of the turf in accordance with the Turf Establishment Period shall be determined. A unacceptable stand of turf shall be repaired as soon as turfing conditions permit.

3.11.2 Final Inspection

A final inspection shall be held by the Contracting Officer to determine that deficiencies noted in the preliminary inspection have been corrected. Time for the inspection shall be established in writing.

-- End of Section --

SECTION TABLE OF CONTENTS

DIVISION 02 - SITE WORK

SECTION 02950

PLANTING AND LANDSCAPING

PART 1 GENERAL

1.1 REFERENCES
1.2 SUBMITTALS
1.3 SOURCE INSPECTIONS
1.3.1 Plant Materials
1.4 SHIPMENT, DELIVERY, INSPECTION, STORAGE, AND HANDLING
1.4.1 Shipment
1.4.1.1 Preparation
1.4.1.2 Antidesiccant Application
1.4.2 Delivery
1.4.2.1 Identification
1.4.2.2 Protection During Delivery
1.4.2.3 Soil Amendments
1.4.2.4 Pesticide
1.4.3 Inspection
1.4.4 Storage
1.4.4.1 Plant Storage
1.4.4.2 Storage of Other Materials
1.4.5 Handling
1.4.5.1 Time Limitation
1.5 WARRANTY
1.6 UNIT PRICES
1.6.1 Measurement
1.6.1.1 Mulch Installation
1.6.1.2 Plant Installation
1.6.1.3 Establishment/Maintenance Period
1.6.2 Payment

PART 2 PRODUCTS

2.1 PLANTS
2.1.1 Varieties
2.1.2 Substitutions
2.1.3 Growing Conditions
2.1.4 Quality
2.1.4.1 Shade and Flowering Trees
2.1.4.2 Deciduous Shrub
2.1.4.3 Coniferous Evergreen
2.1.4.4 Broadleaf Evergreen
2.1.4.5 Vines
2.1.4.6 Palms
2.1.5 Size
2.1.6 Measurement
2.2 TOPSOIL
2.2.1 Soil Test

2.3 SOIL AMENDMENTS
2.3.1 Lime
2.3.2 Dry Fertilizer
2.3.3 Bonemeal
2.3.4 Soil Amendments
2.3.4.1 Peat (Not Applicable)
2.3.4.2 Sand
2.3.4.3 Rotted Manure
2.3.4.4 Decomposed Wood Derivatives
2.3.5 Soil Conditioner
2.3.5.1 Gypsum
2.3.5.2 Aluminum Sulfate
2.4 MULCH
2.4.1 Rock Mulch
2.4.2 River Rock
2.4.3 Recycled Mulch
2.4.4 Shredded Bark
2.4.5 Wood Chips and Ground Bark
2.5 BOULDERS
2.6 WEED FABRIC (GEOTEXTILE):
2.6.1 Nonwoven Polypropylene
2.6.2 Nonwoven polyester
2.7 STAKING MATERIAL
2.7.1 Bracing Stakes
2.7.2 Tree Ties
2.8 WATER
2.9 ANTIDESICCANT
2.10 PRE-EMERGENT HERBICIDE
2.11 RAISED PLANTERS (Not Applicable)
2.12 LANDSCAPE BERMS AND MOUNDS

PART 3 EXECUTION

3.1 EXAMINATION
3.1.1 Verify Grades
3.1.2 Underground Obstructions to Planting
3.2 SITE PREPARATION
3.2.1 Finished Grade, Topsoil and Underground Utilities
3.2.2 Layout
3.2.3 Protecting Existing Vegetation
3.3 EXCAVATION
3.3.1 Obstructions Below Ground or Poor Drainage
3.3.2 Plant Pits
3.3.3 Rough Grading and Landscape Berms
3.3.4 Landscape berms
3.4 PERCOLATION TEST
3.5 PLANTING TIMES AND CONDITIONS
3.6 INSTALLATION
3.6.1 Backfill Mixtures
3.6.1.1 Backfill Soil Mix
3.6.2 Setting Plants
3.6.2.1 Palms
3.6.3 Rain Basins
3.6.4 Dry Fertilizer
3.6.5 Container-Grown Plants
3.6.6 Staking
3.7 FINISHING
3.7.1 Pruning
3.7.2 Pre-emergent Herbicide

3.7.3 Weed Fabric (Geotextile):
3.7.4 Boulders
3.7.5 Mulch
3.7.5.1 Rock Mulch
3.7.5.2 River Rock
3.7.6 Water
3.7.7 Antidesiccant Application
3.8 MAINTENANCE DURING PLANTING OPERATION
3.9 APPLICATION OF PESTICIDE MATERIAL
3.10 RESTORATION AND CLEAN UP
3.10.1 Restoration
3.10.2 Clean Up
3.11 MAINTENANCE PERIOD
3.11.1 Commencement
3.11.2 Maintenance During Establishment Period
3.11.2.1 General
3.11.2.2 Water
3.11.2.3 Weeding
3.11.2.4 Unhealthy Plants
3.11.2.5 Settlement
3.11.2.6 Pesticide Treatment
3.11.2.7 Maintenance Report
3.11.2.8 Maintenance Instruction
3.11.3 Replacement Plants
3.12 FINAL ACCEPTANCE
3.12.1 Preliminary Inspection
3.12.2 Final Inspection

-- End of Section Table of Contents --

SECTION 02950

PLANTING AND LANDSCAPING

PART 1 GENERAL

1.1 REFERENCES

The publications listed below form a part of this specification to the extent referenced. The publications are referred to in the text by basic designation only.

AMERICAN NATIONAL STANDARDS INSTITUTE (ANSI)

ANSI Z60.1	(1986) American Standard for Nursery Stock

AMERICAN SOCIETY FOR TESTING AND MATERIALS (ASTM)

ASTM D 2607	(1969) Peats, Mosses, Humus, and Related Products

FEDERAL SPECIFICATIONS (FS)

FS 0-F-241	(Rev D) Fertilizers, Mixed, Commercial

1.2 SUBMITTALS

Government approval is required for submittals with a "GA" designation; submittals having an "FIO" designation are for information only. The following shall be submitted in accordance with Section 01330 SUBMITTAL DESCRIPTIONS:

SD-07 Schedules

Delivery Schedule; FIO

Delivery Schedule, before work is started, at least 10 days prior to the intended date of the first delivery.

SD-09 Reports

Soil Test; FIO.

Percolation Test; FIO.

Certified reports of inspections and laboratory tests, prepared by an independent testing agency, including analysis and interpretation of test results. Each report shall be properly identified. Test methods used and compliance with recognized test standards shall be described.

SD-13 Certificates

Soil Amendments;FIO.

Plants;FIO.

Certificates of compliance certifying that materials meet the requirements specified, prior to the delivery of materials. Reports for the following materials shall be included.

a. Topsoil: Not Applicable.

b. Fertilizer: For chemical analysis and composition percent.

c. Agricultural Limestone: (Not Applicable)

d. Peat: (Not Applicable)

e. Plant Materials: For botanical and common name, size, quantity by species, grade, nursery grown.

f. Pesticide Material: For EPA registration number and registered uses.

SD-18 Records

Maintenance Period;FIO.

Written calendar time period for the beginning of the plant establishment period. When there is more than one establishment period, the boundaries of the planted areas covered for each period shall be described.

Maintenance Report;FIO.

Written record of maintenance work performed and quantity of plant losses and replacements.

Maintenance Instructions;FIO.

Written instructions for year-round care and upkeep of installed plants, landscaping, and irrigation system.

1.3 SOURCE INSPECTIONS

1.3.1 Plant Materials

Plant materials shall be subject to inspection at the growing site by the Contracting Officer.

1.4 SHIPMENT, DELIVERY, INSPECTION, STORAGE, AND HANDLING

1.4.1 Shipment

1.4.1.1 Preparation

Preparation for shipment shall be done in a manner that will not cause shock or damage to branches, trunk, or root systems. Container grown plant sizes shall be provided as recommended by ANSI Z60.1. Plants shall be grown in a container sufficiently long for new fibrous roots to have developed and for root mass to retain its shape and hold together when removed from container. Container shall be sufficiently rigid to hold ball shape and protect root mass during shipping.

1.4.1.2 Antidesiccant Application

Plants shall be sprayed with an antidesiccant as leaf budding occurs or when plant material has soft growth.

1.4.2 Delivery

1.4.2.1 Identification

Plants shall be identified with durable waterproof labels and weather-resistant ink. Plants shall have attached labels stating the correct plant name and size.

1.4.2.2 Protection During Delivery

Plants shall be protected during delivery to prevent desiccation of the plant or damage to the roots or balls. Branches of plants shall be protected by tying-in the branches and covering all exposed branches.

1.4.2.3 Soil Amendments

Soil amendments shall be delivered to the site in the original, unopened containers bearing the manufacturer's chemical analysis. In lieu of containers, soil amendments may be furnished in bulk. A chemical analysis shall be provided for bulk deliveries.

1.4.2.4 Pesticide

Pesticide materials shall be delivered to the site in the original unopened containers bearing legible labels indicating the Environmental Protection Agency (EPA) registration numbers and the registered uses.

1.4.3 Inspection

Plant material shall be inspected upon arrival at the job site by the Contracting Officer for conformity to the paragraph PLANTS and paragraph Shipment, and any unacceptable plant material shall be removed from the job site.

1.4.4 Storage

1.4.4.1 Plant Storage

Plants not installed on the day of arrival at the site shall be stored and protected in areas designated by the Contracting Officer. Plants shall be protected from exposure to wind and shaded from the sun. Covering that will allow air to circulate and prevent internal heat from building up shall be provided. All plants shall be kept in a moist condition by watering with a fine mist spray until planted.

1.4.4.2 Storage of Other Materials

Soil amendments shall be stored in dry locations away from contaminants. Pesticide materials shall not be stored with other landscape materials. Storage of materials shall be in areas designated or as approved by the Contracting Officer.

1.4.5 Handling

Care shall be taken to avoid injury to plants. Materials shall not be

dropped from vehicles. Container-grown plants shall be handled by the container. Plants shall not be handled by the trunk or stems.

1.4.5.1 Time Limitation

Mulch: Limitation of time between installing plant and placing mulch is 48 hours.

1.5 WARRANTY

Furnished plants shall be guaranteed to be in a vigorous growing condition for a period of 12 months regardless of the contract time period. A plant shall be replaced one time under this guarantee. A written calendar time period for the guarantee of plant growth shall be furnished to the Contracting Officer.

1.6 UNIT PRICES

1.6.1 Measurement

1.6.1.1 Mulch Installation

The amount paid will be for completion of all mulch installation, inspected and approved as accepted work. Mulch quanities shall be specifed in cubic yards

1.6.1.2 Plant Installation

The amount paid will be for completion of all plant installation, all associated equipment/fertilizer/soil amendments, backfill, inspected and approved as accepted work.

1.6.1.3 Establishment/Maintenance Period

The amount paid will be for completion of the 90 days Establishment/Maintenance period, all associated documentation, in-field training, clean-up, inspected and approved as accepted work.

1.6.2 Payment

Quantities specified above will be paid at respective contract unit prices. Payment shall constitute full compensation for completion of each item listed under 1.6.1 Measurement; for furnishing all materials, equipment, plant, and tools; and for labor and other incidentals necessary to complete work required.

PART 2 PRODUCTS

2.1 PLANTS

2.1.1 Varieties

Plants shall be nursery grown or plantation grown stock conforming to ANSI Z60.1 and shall be of the varieties specified in the plant list bearing botanical names listed in one or more of the publications listed under "Nomenclature" in ANSI Z60.1.

2.1.2 Substitutions

Substitutions will not be permitted without written request from the Contractor for approval by the Contracting Officer.

2.1.3 Growing Conditions

All plants shall be grown under climatic conditions similar to those in the locality of the project or acclimatized for a period of 6 months prior to installation.

2.1.4 Quality

Well shaped, well grown, vigorous, healthy plants having healthy and well branched root systems shall be provided. Plants shall be provided free from disease, harmful insects and insect eggs, sun-scald injury, disfigurement and abrasion. Plants shall be provided that are typical of the species or variety and conforming to standards as set forth in ANSI Z60.1 and as specified herein.

2.1.4.1 Shade and Flowering Trees

A height relationship to caliper shall be provided as recommended by ANSI Z60.1. Height of branching should bear a relationship to the size and variety of tree specified and with the crown in good balance with the trunk. Trees shall not be "poled" or the leader removed.

a. Single stem: Trunk shall be reasonably straight and symmetrical with crown and have a persistent main leader.

b. Specimen: A plant shall be provided that is well branched and pruned naturally according to the species. The form of growth desired, which may not be in accordance with natural growth habit, shall be as indicated.

2.1.4.2 Deciduous Shrub

Plants shall be provided that have the height and number of primary stems as recommended by ANSI Z60.1. An acceptable plant shall be well shaped with sufficient well-spaced side branches recognized by the trade as typical for the variety grown in the region.

2.1.4.3 Coniferous Evergreen

Trees shall be provided that have the height-to-spread ratio as recommended by ANSI Z60.1. Trees shall not be "poled" or the leader removed. An acceptable plant shall be exceptionally heavy, well shaped and trimmed to form a symmetrical and tightly knit plant. The form of growth desired shall be as indicated.

2.1.4.4 Broadleaf Evergreen

Plants shall be provided that have ratio of height-to-spread as recommended by ANSI Z60.1. An acceptable plant shall be well shaped and recognized by the trade as typical for the variety grown in the region.

2.1.4.5 Vines

Plants shall be provided with the minimum number of runners and length of runner as recommended by ANSI Z60.1. Plants shall be furnished that have heavy, well developed and balanced top with vigorous well developed root

system and shall be furnished in containers.

2.1.4.6 Palms

Palms shall be in vigorous health with no trunk or rootball damage. Plants shall be boxed or balled and burlaped for transport with fronds tied and wrapped as per industry standards for protection.

2.1.5 Size

Plants shall be furnished in sizes indicated. Palm heights are for brown trunk length. Plants larger in size than specified may be provided at no additional cost to the Government.

2.1.6 Measurement

Plant measurements shall be in accordance with ANSI Z60.1.

2.2 TOPSOIL

No topsoil is available or required for the project site.

2.2.1 Soil Test

A soil test shall be performed for Ph, particle size, chemical analysis and mechanical analysis to establish the quantities and type of soil amendments required to meet local growing conditions for the type and variety of plants specified.

2.3 SOIL AMENDMENTS

Soil amendments consist of lime, fertilizer, bonemeal, organic soil amendments and soil conditioner.

2.3.1 Lime

Lime shall be agricultural limestone and shall have a minimum calcium carbonate equivalent of 90 percent and shall be ground to such a fineness that at least 90 percent will pass a 10-mesh sieve and at least 50 percent will pass a 60-mesh sieve.

2.3.2 Dry Fertilizer

Dry fertilizer shall be commercial grade, free flowing, uniform in composition and conforming to FS 0-F-241. Fertilizer shall be controlled-release fertilizer consisting of nitrogen-phosphorous-potassium ratio: 20 percent nitrogen, 10 percent phosphorous, and 5 percent potassium. Controlled-release fertilizer shall be in tablet form.

2.3.3 Bonemeal

Bonemeal shall be a finely ground, steamed bone product containing from 2 to 4 percent nitrogen and 16 to 40 percent phosphoric acid.

2.3.4 Soil Amendments

2.3.4.1 Peat (Not Applicable)

2.3.4.2 Sand

Sand shall be clean and free of toxic materials and at least 95 percent by weight shall pass a 10-mesh sieve, and 10 percent by weight shall pass a 16-mesh sieve.

2.3.4.3 Rotted Manure

Rotted manure shall be unleached stable or cattle manure containing not more than 25 percent by volume of straw, sawdust, or other bedding materials and containing no chemicals or ingredients harmful to plants. The manure shall be heat treated to kill weed seeds and be free of stones, sticks, and soil.

2.3.4.4 Decomposed Wood Derivatives

Decomposed wood derivatives shall be ground bark, sawdust, or other wood waste material free of stones, sticks, and toxic substances harmful to plants and stabilized with nitrogen and having the following properties:

Particle size	Minimum percent by weight passing
No. 4 mesh screen	95
No. 8 mesh screen	80

Nitrogen Content	Minimum percent based on dry weight
Redwood Sawdust	0.5
Fir Sawdust	0.7
Fir or Pine Bark	1.0

2.3.5 Soil Conditioner

For single use or in combination to meet requirements for planting backfill.

2.3.5.1 Gypsum

Gypsum shall be commercially packaged, free flowing, and a minimum of 95 percent calcium sulfate by volume.

2.3.5.2 Aluminum Sulfate

Aluminum sulfate shall be commercial grade.

2.4 MULCH

Mulch shall be of an inert mulch material and free from weeds, debris, and other deleterious materials. Mulch materials shall be native to the region. Rotted manure is not recommended to be used as a mulch because it would encourage surface rooting of the plant material and weeds.

2.4.1 Rock Mulch

Rock mulch shall be 3/4" minus tan/gold color quarried material that matches adjacent new dormitory landscaping. Submit sample to Contracting Officer for approval.

2.4.2 River Rock

River rock shall be 4 to 12 inches natural smoothed stream bed river-run stone and tan, brown, red, grey, and blue mixed colors. River rock shall match adjacent new dormitory landscaping. Submit sample to Contracting Officer for approval.

2.4.3 Recycled Mulch

Recycled mulch may include compost, tree trimmings, or pine needles with a gradation that passes through a 2-1/2 x 2-1/2 inch screen. It shall be cleaned of all sticks a minimum 1 inchin diameter and plastic materials a minimum 3 inchlength. The material shall be treated to retard the growth of mold and fungi. Other recycled mulch may include peanut shells, pecan shells or coc bean shells.

2.4.4 Shredded Bark

Locally shredded material shall be treated to retard the growth of mold and fungi.

2.4.5 Wood Chips and Ground Bark

Locally chipped or ground material shall be treated to retard the growth of mold and fungi. Gradation: A minimum 2 inch wideby 4 inch long.

2.5 BOULDERS

Boulders shall be of locally available quarried material with colors in tans, browns, and reds. Boulders are to be surface grade or quarried rock. Size shall be as designated on drawings. A sample shall be approved by the Contracting Officer.

2.6 WEED FABRIC (GEOTEXTILE):

2.6.1 Nonwoven Polypropylene

Nonwoven polypropylene shall be spunbonded, water permeable, non-brittle, weigh a minimum 4 ounces per square yard, be a minimum 10 mils thick and come in 6-feet-wide rolls.

2.6.2 Nonwoven polyester

Nonwoven polyester shall be spunbonded, water permeable, non-brittle, weigh a minimum 4 ounces per square yard, be a minimum 10 mils thick and come in 6-feet-wide rolls.

2.7 STAKING MATERIAL

2.7.1 Bracing Stakes

Bracing stakes for tree support shall be pentachlorophenol treated lodge pole pine free of any defects that would impair the strength. Bracing stakes shall be minimum 2" diameter by 8 feetlong and pointed at one end.

2.7.2 Tree Ties

Material for holding tree to stake shall be a commercially available rubber tie.

2.8 WATER

Water shall not contain elements toxic to plant life. Water will be furnished from the project mainline or a Government fire hydrant on the base.

2.9 ANTIDESICCANT

Antidesiccant shall be an emulsion that will provide a film over plant surfaces permeable enough to permit transpiration, and shall not damage the plant.

2.10 PRE-EMERGENT HERBICIDE

Pre-emergent herbicide shall be in a commercially available dry or liquid form that is easily applied and meet all local and state regulations.

2.11 RAISED PLANTERS (Not Applicable)

2.12 LANDSCAPE BERMS AND MOUNDS

Landscape berms shall be formed from clean native soil that is free from foreign or construction debris. Coordinate with CMU wall construction and rough grading. Compact and settle by construction equipment walking. Rough grade shall be ripped to 8 inches to break up construction compaction before placement of berm material.

PART 3 EXECUTION

3.1 EXAMINATION

3.1.1 Verify Grades

The Contracting Officer shall verify the finished grades are as indicated on drawings, and smooth grading has been completed in accordance with Section 02210 GRADING before start of landscape berm placement and other landscape operations.

3.1.2 Underground Obstructions to Planting

The location of underground utilities and facilities shall be verified. Damage to underground utilities and facilities shall be repaired at the Contractor's expense.

3.2 SITE PREPARATION

3.2.1 Finished Grade, Topsoil and Underground Utilities

The Contractor shall verify that finished grades are as indicated on drawings, and that the placing of topsoil, the smooth grading, and the compaction requirements have been completed in accordance with Section 02300 EARTHWORK, prior to the commencement of the planting operation. The location of underground utilities and facilities in the area of the planting operation shall be verified. Damage to underground utilities and facilities shall be repaired at the Contractor's expense.

3.2.2 Layout

Landscape berms, CMU walls, plant material locations, and mulch outlines shall be staked on the project site before any excavation is made. Plant

material, berms, mulch, and boulder locations may be adjusted by the Contracting Officer to meet field conditions.

3.2.3 Protecting Existing Vegetation

When there are established lawns in the planting area, the turf shall be covered and/or protected during planting operations. Existing trees, shrubs, and plant beds that are to be preserved shall be barricaded alond the dripline to protect them during planting operations.

3.3 EXCAVATION

3.3.1 Obstructions Below Ground or Poor Drainage

When obstructions below ground or poor drainage affect the contract operation, proposed adjustments to landscape element locations, type of plant and planting method or drainage correction shall be submitted to and approved by the Contracting Officer.

3.3.2 Plant Pits

Plant pits shall be dug to produce vertical sides and flat, uncompacted bottoms. When pits are dug with an auger and the sides of the pits become glazed, the glazed surface shall be scarified. The size of all plant pits, except for palms, shall be 1-1/2 times rootball depth and a minimum of 4 times rootball depth.

3.3.3 Rough Grading and Landscape Berms

All grades and landscape berms shall follow the designed slope and swales for drainage. All rough grades shall drain away from buildings and be 2" below finish grade of walks, curbs, etc. to allow for mulch placement.

3.3.4 Landscape berms

Landscape berms shall be laid out and constructed as shown on plans and as adjusted to meet field conditions. Coordinate with CMU wall construction and rough grading. Berms shall be constructed in one foot lifts and compacted by construction equipment walking. Final shaping shall be to provide natural contours and transitions to adjacent areas with positive drainage to swales and streets.

3.4 PERCOLATION TEST

Test for percolation shall be done to determine positive drainage of plant pits and beds. The Contracting Officer shall be notified in writing of all soil and drainage conditions detrimental to growth of plant material and shall submit proposal for correcting the condition.

3.5 PLANTING TIMES AND CONDITIONS

For best results, install container grown plant material in the fall before the chance of the first frost or in the spring after the last chance of frost. Planting operations shall be performed only during periods when beneficial results can be obtained. When drought, excessive moisture or other unsatisfactory conditions prevail, the work shall be stopped when directed. Contractor shall schedule planting in the mornings to avoid stressing plants during installation, if the planting schedule calls for installation when the temperature is expected to be 90 degrees Fahrenheit

or greater. When special conditions warrant a variance to the planting operations, proposed planting times shall be submitted to and approved by the Contracting Officer.

3.6 INSTALLATION

3.6.1 Backfill Mixtures

Backfill shall be installed as part of the installation operations. The backfill mixture shall be a proportioned mixture thoroughly mixed by volume of clean native soil and selected organic soil amendment(s) of a decomposed wood derivative nature.

3.6.1.1 Backfill Soil Mix

The basin backfill soil mixture shall be placed in the planting pits during plant installation operations. The basin backfill soil mixture shall be as follows:

Clean Native Soil	=	1 part to mixture
Organic Soil Amendment(s)	=	2 parts to mixture

3.6.2 Setting Plants

Plants shall be set plumb and held in position until sufficient backfill soil mix has been firmly placed around roots or ball. Plants shall be set in relation to surrounding grade so that they are even with the depth at which they were grown in the nursery, or container. Plants root crown shall be set above subgrade as specified on drawings.

3.6.2.1 Palms

Palms shall be installed as per industry standards and detail. Ensure palms are plumb and root balls elevated and protected from damage.

3.6.3 Rain Basins

A depressed rain basin shall be formed around individual plants. Basin shall be excavated from around planting, and shall be level and continuous around plant.

3.6.4 Dry Fertilizer

Dry fertilizer shall be placed in tablet form in the plant pit in the immediate vicinity of the feeding roots in accordance with the manufacturer's recommendations. Space tablets at equal distances from each other and the rootball. The tablets shall be allotted as follows:

Palms	= 8 tablets (21 grams each or equivalent)
24" box container	= 6 tablets (21 grams each or equivalent)
15 gallon container plants	= 4 tablets (21 grams each or equivalent)
5 gallon container plants	= 3 tablets (21 grams each or equivalent)
1 gallon container plants	= 1 tablets (21 grams each or equivalent)

3.6.5 Container-Grown Plants

Non-biodegradable containers shall be removed without damage to the plant or root system. Biodegradable containers shall be split. The backfill mix shall be completed, tamped and watered.

3.6.6 Staking

All trees shall be held in place with two bracing stakes driven vertically into ground and placed on opposite sides. Stakes shall not injure the ball or roots. The tree shall be held firmly between the stakes with a double strand of wire. Chafing guards shall be used where the wire contacts the tree. Nursery stakes shall be untied and removed from stem, if applicable. Care shall be taken so that the stem is supported during this operation and is not allowed to bend to the point of damage before the tree stakes are in place and the tree is secured.

3.7 FINISHING

3.7.1 Pruning

The total amount of foliage shall be pruned by one-fourth to one-third on installed trees and shrubs to compensate for loss of roots and transplanting shock. The typical growth habit of individual plants shall be retained. Clean cuts shall be made flush with the parent trunk. Improper cuts, stubs, dead and broken branches shall be removed. "Headback" cuts at right angles to the line of growth shall not be permitted. Trees shall not be poled or the leader removed, nor shall the leader be pruned or "topped off." Cuts or wounds measuring a minimum 1/2 inch in diameter shall be painted with the specified tree wound dressing.

3.7.2 Pre-emergent Herbicide

Pre-emergent herbicide shall be applied as per manufacturer's specifications on all landscape areas after finish grading and prior to rock mulch installation. Only EPA and State approved herbicides shall be used. The Contracting Officer will be notified regarding pesticided selected and applied.

3.7.3 Weed Fabric (Geotextile):

Before placement of rock mulches, install under all areas to be rock mulched, excluding boulders. All edges shall be heel toed into grade with all material overlaps a minimum of 12". Steel stake as per manufacture's specifications.

3.7.4 Boulders

Boulders shall be placed in locations as shown on drawings. Locations shall be staked on the ground and approved by the Contracting Officer prior to installation. Place boulders prior to installation of mulch and plants. Place boulders individually with appropriate equipment to prevent scarring of boulder surface. Position boulders so that natural weathered surface of boulder is exposed above grade as it was in its natural native setting. Boulders which have been surface scarred by mechanical equipment or excessively chipped or cracked during mining, delivery, storage, or handling will be rejected and removed from the worksite by the contractor.

3.7.5 Mulch

After irrigation installation and rough grading, mulch bed outlines shall be marked on the ground as per drawings and field conditions for approval by the Contracting Officer prior to installation of any mulch or plantings. Pre-emergent herbicide shall be applied before placement of any mulch or

weed fabric.

3.7.5.1 Rock Mulch

Rock mulch shall be placed after pre-emergent application and spread to a uniform depth of a minimum of 2 inches. Install rock to form smooth transitions to existing landscape. Excess stockpiled rock shall be spread out evenly over landscape areas.

3.7.5.2 River Rock

River rock shall be spread and hand placed where necessary to a minimum depth of 8 inches so that grades are not visible after placement of rock. Care shall be taken to insure the rock is well mixed so that smaller rock will fill voids left by larger rock. Excessive cracked, chipped, and broken pieces of river rock and organic debris shall be removed from installation. Location of rock shall be placed in all major drainage swales and at areas as shown on the drawings.

3.7.6 Water

Plants shall be watered as necessary to maintain an adequate supply of moisture within the root zone. Run-off, puddling and wilting shall be prevented.

3.7.7 Antidesiccant Application

Plants requiring further protection shall be sprayed with anti-desiccant in accordance with manufacturer's recommendations.

3.8 MAINTENANCE DURING PLANTING OPERATION

Installed plants shall be maintained in a healthy growing condition. Maintenance operations shall begin immediately after each plant is installed and shall continue until the plant establishment period commences. The maintenance includes irrigation system upkeep, watering, pruning, wound dressing, straightening and other necessary operations. Plant beds and earth water basins shall be kept free of weeds, grass and other undesired vegetation. Plants shall be checked for settlement and shall be reset proper grade as necessary. Run-off, puddling and wilting shall be prevented.

3.9 APPLICATION OF PESTICIDE MATERIAL

When pesticide becomes necessary to remove a disease or pest, a state-certified applicator shall apply required pesticide in accordance with State and EPA label restrictions and recommendations. Hydraulic equipment shall be provided for the liquid application of pesticides with a leak-proof tank, positive agitation methods, controlled application pressure and metering gauges. A pesticide treatment plan shall be provided to the Contracting Officer as specified in paragraph SUBMITTALS.

3.10 RESTORATION AND CLEAN UP

3.10.1 Restoration

Pavements and facilities that have been damaged from the planting operation shall be restored to original condition at the Contractor's expense.

3.10.2 Clean Up

Excess and waste material from the planting operation shall be removed and disposed of off the site. Adjacent paved areas shall be cleared.

3.11 MAINTENANCE PERIOD

3.11.1 Commencement

On completion of the last day of the planting and landscaping operation and all other construction activity including architectural, civil, etc., the maintenance period for maintaining irrigation, hardscape, and installed plants in a healthy growing condition shall commence upon written notice of 'start of maintenance period' from the Contracting Officer. The maintenance period shall be in effect for 90 calendar days.

3.11.2 Maintenance During Establishment Period

3.11.2.1 General

Maintenance of plants and landscape shall include straightening plants, tightening stakes and guying material, repairing tree wrapping, protecting plant areas from erosion, maintaining erosion control material, supplementing mulch, accomplishing wound dressing, removing dead or broken tip growth by pruning, maintaining edging of beds, checking for girdling of plants and maintaining plant labels, watering, weeding, removing and replacing unhealthy plants, and adjusting and maintaining irrigation system as required.

3.11.2.2 Water

The plants shall be watered as necessary to maintain an adequate supply of moisture within the root zone and encourage deep rooting. An adequate supply of moisture is estimated to be the equivalent of one inch of absorbed water per week delivered in the form of natural rain or augmented as required by periodic watering. Run-off, puddling and wilting shall be prevented.

3.11.2.3 Weeding

Grass and weeds in earth water basins and landscape areas shall not be allowed to reach a height of 3 inches before being completely removed, including the root growth.

3.11.2.4 Unhealthy Plants

A plant shall be considered unhealthy or dead when the main leader has died back, or 25 percent of the crown is dead. Determine the cause for an unhealthy plant. Unhealthy or dead plants shall be removed immediately and shall be replaced as soon as seasonal conditions permit.

3.11.2.5 Settlement

Native soil or mulch material shall be added to maintain grade and coverage. Serious settlement affecting the setting of the plant in relation to the depth at which it was grown requires replanting in accordance with paragraph INSTALLATION.

3.11.2.6 Pesticide Treatment

Treatment for diseases or pest shall be in accordance with paragraph APPLICATION OF PESTICIDE MATERIAL.

3.11.2.7 Maintenance Report

A written record shall be furnished to the Contracting Officer of the maintenance work performed, irrigation adjustments and repairs, the quality of plant losses, cause for plant loss and replacements made on each site visit.

3.11.2.8 Maintenance Instruction

Written instructions shall be furnished to the Contracting Officer for year-round care of installed plants and irrigation system.

3.11.3 Replacement Plants

Plants shall be provided for replacement in accordance with paragraph PLANTS. Replacement plants shall be installed in accordance with paragraph INSTALLATION. No extended plant establishment period shall be required for replacement plants. A plant will be replaced in accordance with paragraph WARRANTY.

3.12 FINAL ACCEPTANCE

3.12.1 Preliminary Inspection

Prior to the end of the maintenance period, a preliminary inspection shall be held by the Contracting Officer. Time for the inspection shall be established in writing. A checklist of items to be done will be determined, such as irrigation adjustments, plants to be replaced, mulch replacement, etc. These items will be checked for completion at the Final Inspection.

3.12.2 Final Inspection

At the end of the maintenance period, a final inspection shall be held by the Contracting Officer to determine that deficiencies noted in the preliminary inspection have been corrected. Time for the inspection shall be established in writing. Acceptance of the planting is subject to the guarantee of plant vigor and growth.

-- End of Section --

SECTION TABLE OF CONTENTS

DIVISION 02 - SITE WORK

SECTION 02951

AIRFIELD RUNWAY RUBBER AND PAINT REMOVAL

PART 1 GENERAL

1.1 REFERENCES
1.2 SCOPE
1.2.1 Description of work
1.2.2 Pavement Damage Survey
1.2.3 Methods and Work Areas
1.2.3.1 Rubber Removal
1.2.3.2 Paint Removal
1.3 UNIT PRICES
1.3.1 Measurement
1.3.2 Payment
1.3.3 Aircraft Traffic Interruptions
1.4 SUBMITTALS
1.5 TESTING
1.6 COMPLIANCE WITH REGULATIONS
1.7 ESTABLISHMENT OF WORK ZONES
1.8 OPERATIONS ON THE AIRFIELD
1.8.1 Airfield Access
1.8.1.1 Radio-Controlled Areas
1.8.1.2 Emergencies
1.8.2 Debris Removal
1.8.3 Work Schedule
1.8.4 Environmental Limitations
1.8.5 Night Operations
1.9 EQUIPMENT
1.9.1 Machinery
1.9.2 Lighting
1.9.3 Storage
1.9.4 Government Furnished Materials And Equipment
1.9.4.1 Communications Equipment
1.9.4.2 Water

PART 2 PRODUCTS (Not Applicable)

PART 3 EXECUTION

3.1 RUBBER REMOVAL
3.2 PAINT REMOVAL
3.3 COMPLIANCE TESTING
3.3.1 Quantitive Measuring
3.3.2 Evaluation Zones
3.3.3 Deposits and Stains
3.4 DAMAGE REPAIR AND CLEANUP
3.4.1 Pavement Damage Repair
3.4.2 Clean up

-- End of Section Table of Contents --

SECTION 02951

AIRFIELD RUNWAY RUBBER AND PAINT REMOVAL

PART 1 GENERAL

1.1 REFERENCES

The publications listed below form a part of this specification to the extent referenced. The publications are referred to in the text by basic designation only.

AIR FORCE (AF)

AFI 13-213	Airfield Management
AFI 32-1026	Planning and Design of Airfields
AFI 32-1042	Standards for Marking Airfields
AFMAN 32-1076	Visual Air Navigation Systems
FJMAN 32-1013v1	Airfield and Heliport Planning Criteria
AFMAN 32-1013v2	Planning Criteria and Waivers for Airfield Support Facilities
AF ETL 94-1	Standard Airfield Pavement Marking Schemes

FEDERAL AVIATION ADMINISTRATION (FAA)

FAA AC 150/5370-2C	Operational Safety on Airports During Construction
FAA AC 150/5340-1G	Standards for Airport Markings

UNITED STATES CODE (U.S.C)

42 U.S.C. 6901, et seq.,	Resource Conservation Recovery Act
42 U.S.C. 9601, et seq.,	Comprehensive Environmental Response, Compensation, and Liability Act
49 U.S.C. 1801, et seq.,	Hazardous Materials Transportation Act

1.2 SCOPE

1.2.1 Description of work

The work specified by this section consists of furnishing all labor, equipment, tools, appliances, and materials required to remove 85 percent of the rubber and paint buildup from 100 percent of the rubber covered and

painted area within a designated area of runway, taxiway, apron pavement. The rubber and paint removal is to be completed without damage to the pavement surface, joints, and joint and crack seals, or any other government property. The term "paint" used herein may include obsolete paint markings and/or loose and poorly bonded paint buildup.

1.2.2 Pavement Damage Survey

The Contracting Officer and the Contractor shall jointly inspect the work area before work commences. Any existing damage to the pavement systems shall be documented at that time. The Contractor shall repair damage incurred during the contracted operations in accordance with paragraph "3.4.1 Pavement Damage Repair".

1.2.3 Methods and Work Areas

1.2.3.1 Rubber Removal

Rubber buildup shall be removed from the designated rubber-covered area in accordance with paragraph "3.1 RUBBER REMOVAL". The rubber-covered area in each runway touchdown zone is an imaginary rectangle with sides parallel to the centerline and ends transverse to the centerline. Within the rectangle, the rubber deposits overlap and the exposed pavement texture comprises less than 80 percent of the total area. The rubber-covered area does not include the portion of pavement outside the central rubber buildup zone where the rubber marks are intermittent and more than 80 percent of the pavement texture is exposed. Rubber deposits are not to be removed outside the designated rubber-covered area.

1.2.3.2 Paint Removal

Paint shall be removed in accordance with paragraph "3.2 PAINT REMOVAL". The locations and configurations of markings to be removed are indicated in the contract drawings.

1.3 UNIT PRICES

1.3.1 Measurement

The unit of measurement for pavement rubber and paint removal shall be the number of square yards of pavement cleaned and accepted. Lead based paint testing shall be compensated for based on the number of tests performed as specified herein or as directed.

1.3.2 Payment

The quantities of rubber buildup and paint removed from the pavement surfaces will be paid by contract unit prices for the base year Line Item 0024AB, "RUBBER & PAINT REMOVAL" of the Pricing Schedule. Lead based paint testing shall be paid for by the contract unit price for the base year Line Item 0004AD, "LEAD BASED PAINT TESTING". Payment will constitute full compensation for all labor, materials, tools, equipment, appliances, disposal, and the performance of all work involved in removing the rubber and paint from the designated areas.

1.3.3 Aircraft Traffic Interruptions

The Contractor shall specify on the bid schedule an hourly rate for aircraft traffic interruption. Time measurement for traffic interruptions

shall begin with the notification to the Contractor to clear the runway and shall end ten minutes after the Contractor is notified that he can re-occupy the runway. The Contractor shall be paid for a minimum of one hour for each interruption. Interruptions longer than one hour shall be calculated on the half hour: i.e., a delay over one hour but less than one and one-half hours would be paid as one and one-half hours; a delay over one and one-half hours but less than two hours would be paid as two hours.

1.4 SUBMITTALS

Government approval is required for submittals with a "GA" designation: submittals having an "FIO" designation are for information only. The following shall be submitted in accordance with Section 01330 SUBMITTAL PROCEDURES:

SD-01 Data

Rubber Removal Equipment; FIO.

A list of construction equipment including item names and descriptions.

SD-08 Statements

Runway Rubber Removal; FIO.

Statements regarding the suitability of materials, personnel, and methods proposed to accomplish the work.

Waste Identification and Disposal Plant

Plant proposed actions regarding waste collection, control, identification, and disposal. The plan will address disposal methods and requirements for hazardous and non-hazardous wastes.

Lead-based paint removal

If lead-based paint is identified for removal, the Contractor shall submit a plan of action detailing the proposed procedures for lead-based paint removal, including all air and bulk sampling and analysis, for approval by the Contracting Officer's environmental representative. The plan shall include all procedures and equipment required for worker protection by the Occupational Safety and Health Administration (OSHA), as well as local and state requirements.

1.5 TESTING

The Contractor shall test all equipment and demonstrate on the designated pavement work areas the proposed method to be used to remove rubber and paint.

The Contracting Officer will designate a test strip within the work area. The test strip shall be as wide as the full operating width of the equipment and at least 50 feet long. The test strip shall be long enough to determine the operating parameters of the vehicle(s) and equipment to be used for the work. The test strip shall be used to demonstrate the effectiveness of the Contractor's methods and equipment to satisfactorily remove rubber and paint deposits from the pavement surfaces at the specified removal rate without damaging the pavement surface. Satisfactory removal shall be determined in accordance with section "3.3 COMPLIANCE

TESTING" of this specification. The Contracting Officer and/or Contracting Officer's representative(s) shall be present at the test area to examine the pavement texture obtained on the test strip. The test strip shall be the measure of performance required of the Contractor for the rubber and paint removal project.

The Contractor shall not proceed with the work until the results of the test strip are satisfactory to the Contracting Officer or authorized representative.

1.6 COMPLIANCE WITH REGULATIONS

The Contractor shall ensure that any rubber and paint removal process is conducted in strict compliance with all local, state, and Federal environmental statutes and regulations, including, but not limited to, regulations promulgated under the Resource Conservation Recovery Act, 42 U.S.C. 6901, et seq., and the Comprehensive Environmental Response, Compensation, and Liability Act, 42 U.S.C. 9601, et seq.,

1.7 ESTABLISHMENT OF WORK ZONES

The Contractor shall provide all cones, barriers, lights, signs, placards, flags, and flagging personnel necessary to establish an adequate work zone and control traffic in and around the work zone. The Contractor shall establish and maintain work zones as necessary throughout the period of the contract, prominently identifying potential hazards and dangers to personnel and traffic in or near the work area.

The Contractor shall comply with AFI 32-1042, AF ETL 94-1, and FAA AC 150/5370-2C for temporary pavement closures on airfields.

1.8 OPERATIONS ON THE AIRFIELD

1.8.1 Airfield Access

Work will be performed in the controlled zones of the base or the airfield. All access to or through the base shall be coordinated with the Contracting Officer or authorized representative. All access to or through the airfield shall be coordinated with the Chief of Airfield Management.

1.8.1.1 Radio-Controlled Areas

When within the radio-controlled areas of the airfield, the Contractor shall maintain continuous verbal and visual contact with the control tower. The Contractor shall verbally inform the control tower and the Chief of Airfield Management when the work has been completed and all equipment, labor and materials have been removed from the airfield.

1.8.1.2 Emergencies

It is the intention of the Government to close the runway to all aircraft traffic while rubber and paint is being removed. However, work may be interrupted to provide a runway for aircraft in an emergency or when a special or unscheduled mission is assigned. If the runway is needed for aircraft operations, the Contractor shall remove all equipment from the operational surfaces of the airfield and beyond the hold line within 15 minutes of notification to clear the runway. A scheduled landing or departure that has been identified to the Contractor prior to the start of the Contractor's work shift shall not be considered an interruption.

1.8.2 Debris Removal

The Contractor shall clear debris from the runway and roadway) surface as the work proceeds.

1.8.3 Work Schedule

The Contractor must adhere to the preapproved schedule for execution of the work, weather permitting, since runway closures must be coordinated in advance. If the Contractor's schedule is delayed by weather conditions or mechanical equipment breakdown, the Contractor shall notify the Contracting Officer and a new work schedule will be established. The Contracting Officer's representative shall be responsible for coordinating the runway closure schedule with the using agencies.

1.8.4 Environmental Limitations

Rubber and paint removal methods that use water or chemicals shall not be permitted when the air temperature is at 40 degree F and falling or the pavement surface temperature is at 35 degree F or less and falling.

1.8.5 Night Operations

Night work must be approved in advance by the Contracting Officer. The Government reserves the right to accept or reject night work the day following night activities by the Contractor

1.9 EQUIPMENT

1.9.1 Machinery

The equipment used in the removal process shall be mounted on pneumatic tires and shall remove deposits of rubber and paint without causing damage to pavement surfaces, joints, or joint and crack seal material.

1.9.2 Lighting

The Contractor shall furnish all lighting necessary for night operations. Lighting will be directed or shaded to prevent interference with aircraft, the Air Traffic Control tower, and other base operations. The Contractor shall be capable of removing all lighting equipment from the runway within 15 minutes of notification of an emergency.

1.9.3 Storage

The Contractor shall store equipment and materials only in areas approved by the Contracting Officer

1.9.4 Government Furnished Materials And Equipment

1.9.4.1 Communications Equipment

The Government will furnish a radio to the Contractor for the purpose of maintaining verbal communications with the Control Tower during each work day. The Contractor shall assume responsibility for the radio while it is in his possession and shall reimburse the Government for the cost of repair or replacement if the radio is lost, damaged, or destroyed.

1.9.4.2 Water

Water will be furnished at no cost to the Contractor. The water supply shall be a fire hydrant designated by the Contracting Officer and located within a reasonable proximity to the work area. The Contractor shall install a gate valve and back-flow prevention device on the fire hydrant tap. The Contractor shall furnish all equipment, material, and labor necessary to obtain and deliver water from the designated fire hydrant to the work area(s).

PART 2 PRODUCTS (Not Applicable)

PART 3 EXECUTION

3.1 RUBBER REMOVAL

Rubber shall be removed by high pressure water and/or detergents. The Contractor may inject sand as an abrasive into the high pressure water system. The use of environmentally acceptable chemical agents or high velocity impact removal shall be considered on a case-by-case basis. Use of any chemicals or impact abrasive in the removal process must be approved in advance by the Contracting Officer. The Government specifically reserves the right to reject the use of any rubber removal process which the Contracting Officer determines may pose unnecessary risks to aircraft due to foreign object damage (FOD) potential, human health, or the environment as a result of its use, storage, or disposal. Rubber deposits shall be removed at a minimum rate of 10,000 square feet per hour.

3.2 PAINT REMOVAL

Paint shall be removed by high pressure water and/or grinding. The Contractor may inject sand as an abrasive into the high pressure water system. The use of environmentally acceptable chemical agents or high velocity impact removal shall be considered on a case-by-case basis. Use of any chemicals or impact abrasive in the removal process must be approved in advance by the Contracting Officer. The Government specifically reserves the right to reject the use of any paint removal process which the Contracting Officer determines may pose unnecessary risks to aircraft due to foreign object damage (FOD) potential, human health, or the environment, as a result of its use, storage, or disposal. Painted markings equal to or greater than three feet wide shall be removed at a minimum rate of 1000 square feet per hour.

3.3 COMPLIANCE TESTING

Compliance with the 85 percent removal from 100 percent of the area shall be determined by direct testing within the designated work area.

3.3.1 Quantitive Measuring

A One square foot section of transparent material inscribed with a grid of 100 equal squares shall be used as a tool for quantitative measure of the 85 percent removal. Place the grid pattern on the pavement surface at random locations. Then count the squares which contain rubber and paint deposits. The number of squares containing rubber and paint deposits shall not exceed 15 in each of the randomly selected locations.

3.3.2 Evaluation Zones

Each work area designated for rubber and paint removal shall be divided into at least four equal zones for the purpose of compliance testing. Within each zone, a minimum of seven random locations shall be evaluated. At least 85 percent of the randomly selected areas within each zone must meet the requirement described in the paragraph Quantitive Measuring. Each zone shall be evaluated independently. A zone not meeting the 85 percent removal requirement shall be recleaned by the Contractor at the Contractor's expense.

3.3.3 Deposits and Stains

Deposits of rubber or rubber buildup and paint are defined as any surface deposit that can be removed by scratching the deposit with a flat sharp object such as a pocket knife without damaging the pavement surface. Stains are defined as materials in the pavement surface microtexture that cannot be removed without damaging the pavement surface. Stain is generally embedded in the surface of the pavement below the horizontal plane of the surface texture. The Contractor is not responsible for stain removal.

3.4 DAMAGE REPAIR AND CLEANUP

3.4.1 Pavement Damage Repair

Any damage to the pavement surface, joints, joint and crack seals, or other Government property incurred during the performance of the work shall be repaired by the Contractor at the Contractor's expense. Repair methods and materials shall be approved by the Contracting Officer prior to performance of the repairs. Repairs shall be completed within the performance period for the contract.

3.4.2 Clean up

The Contractor shall remove from the airfield all debris, waste, and by-products generated by the rubber and paint removal operations and shall dispose of these wastes in strict compliance with all applicable state, local, and Federal environmental statutes and regulations, including, but not limited to, regulations promulgated under the Resource Conservation Recovery Act, 42 U.S.C. 6901, et seq., the Comprehensive Environmental Response, Compensation, and Liability Act, 42 U.S.C. 9601, et seq., and the Hazardous Materials Transportation Act, 49 U.S.C. 1801, et seq.,.

-- End of Section --

SECTION TABLE OF CONTENTS

DIVISION 02 - SITE WORK

SECTION 02960

FULL DEPTH RECLAMATION - MECHANICAL STABILIZATION

PART 1 GENERAL

1.1 PROCESS DESCRIPTION
1.2 SCOPE OF WORK
1.3 REFERENCES
1.4 UNIT PRICE
1.4.1 Measurement
1.4.2 Payment
1.5 SUBMITTALS
1.6 PLANT, EQUIPMENT, MACHINES, AND TOOLS
1.6.1 General Requirements
1.6.2 Mixing
1.6.3 Aggregate Spreading
1.6.4 Cement Spreading
1.6.5 Recycled Base Course Placement/Grading
1.6.6 Compaction
1.6.7 Straightedge
1.7 SAMPLING AND TESTING
1.7.1 General Requirements
1.7.2 Test Results
1.7.3 Sampling
1.7.4 Field Density with Moisture Content

PART 2 PRODUCTS

2.1 MATERIALS
2.1.1 Pulverized Base Material
2.1.2 Virgin Aggregates
2.1.3 Water
2.1.4 Cement
2.2 PROPORTIONING OF MIXTURE
2.2.1 Job Mix Formula
2.2.2 Mixture

PART 3 EXECUTION

3.1 GENERAL REQUIREMENTS
3.2 GRADE CONTROL
3.3 INSTALLATION
3.3.1 Mixing and Placing
3.3.2 Edges of Stabilized Base Course
3.3.3 Compaction
3.3.4 Layer Thickness
3.3.5 Finishing
3.3.5.1 Smoothness
3.3.5.2 Thickness Control

3.3.6 Field Quality Control
3.3.6.1 Field Density With Moisture Content
3.3.6.2 Gradation With Atterberg Limits
3.3.6.3 Moisture-Density Relationship
3.3.6.4 Degradation Tests
3.3.6.5 Smoothness
3.3.6.6 Thickness
3.3.7 Traffic
3.3.8 Maintenance
3.3.9 Disposal Of Unsatisfactory Materials
3.3.10 Weather Limitations

-- End of Section Table of Contents --

SECTION 02960

FULL DEPTH RECLAMATION - MECHANICAL STABILIZATION

PART 1 GENERAL

1.1 PROCESS DESCRIPTION

Full Depth Reclamation (FDR) process consists of a series of steps that include pulverization and mixing of the existing asphalt surface with the aggregate base and subgrade soil. An additive or additives and water are blended with the pulverized pavement which is then graded and compacted. The pulverization and mixing operations normally are completed with large, high horsepower (up to 485 kW/650 hp) road reclaiming machines. The depth of FDR depends upon the existing pavement thickness, subgrade soil conditions and expected future traffic but typically is from 6 to 12 inches. For projects with thicker asphalt sections of 8 inches or more, and a base capable of supporting the equipment, the FDR may be completed with a cold in-place recycling train. The train consists of a cold milling machine towing trailer mounted screening/crushing and mixing plants. Three different types of material stabilization are used - **Mechanical**, **Cement/Fly Ash** and **Asphalt**.

1.2 SCOPE OF WORK

This work shall consist of pulverizing the existing bituminous surface along with the underlying granular base material and or subgrade to the specified length, width, and depth. Once pulverized, the pavement material shall then be used to establish proper grade and cross-slope. When proper grade is reached, the pulverized material will then be mechanically stabilized by mixing in virgin aggregate, as specified, then spreading, compacting and priming said mixture as shown on the plans and as provided herein to create an "In-Place" **Stabilized Base Course** (SBC).

In the event that sub-standard material, high fines content or excessive moisture is present in isolated areas after the first pulverization pass, a small percentage of cement may be required to condition and/or dry the recycled material. Said cement shall be uniformly dispersed throughout the base material by using the reclaimer to mix the materials in the affected areas. Any additional labor and/or equipment costs associated with the addition of this cement shall be included in the contingency cement pay item.

1.3 REFERENCES

The publications listed below form a part of this specification to the extent referenced. The publications are referred to in the text by basic designation only.

AMERICAN SOCIETY FOR TESTING AND MATERIALS (ASTM)

ASTM C 131	(1996) Resistance to Degradation of Small-Size Coarse Aggregate by Abrasion

	and Impact in the Los Angeles Machine
ASTM C 150	(1996) Portland Cement
ASTM D 75	(1987; R 1992) Sampling Aggregates
ASTM D 1556	(1990; R 1996) Density and Unit Weight of Soil in Place by the Sand-Cone Method
ASTM D 2216	(1992) Laboratory Determination of Water (Moisture) Content of Soil and Rock
ASTM D 2922	(1996) Density of Soil and Soil-Aggregate in Place by Nuclear Methods (Shallow Depth)
ASTM D 3017	(1996) Water Content of Soil and Rock in Place by Nuclear Methods (Shallow Depth)
ASTM D 3740	(1996) Minimum Requirements for Agencies Engaged in the Testing and/or Inspection of Soil and Rock as Used in Engineering Design and Construction
ASTM D 5255	(1992)Certification of Personnel Engaged in the Testing of Soil and Rock
ASTM E 329	(1990) Evaluation of Testing and Inspection Agencies as Used in Construction

DEPARTMENT OF THE ARMY, CORPS OF ENGINEERS

CESPK PAM 415-1-2	Construction Control Manual

1.4 UNIT PRICE

1.4.1 Measurement

The quantity of milled pavement and In-Place Stabilized Base Course shall be the number of square yards completed and accepted as determined by the Contracting Officer.

1.4.2 Payment

There is no line item for this work in the Pricing Schedule; mechanical stabilization, constructed and accepted, will be paid for at the negotiated contract unit prices. No payment will be made for any material wasted, used for the convenience of the Contractor, unused or rejected, or for water used.

1.5 SUBMITTALS

Government approval is required for submittals with a "GA" designation; submittals having an "FIO" designation are for information only. The following shall be submitted in accordance with Section 01330 SUBMITTAL PROCEDURES:

SD-01 Data

Mix Design; GA.

Proposed mix design or blending if cement or aggregate is added to the existing material, prior to start of stabilization work.

SD-18 Records

Stabilizing Course; FIO.

Notification of sources from which aggregates are to be obtained, within 15 days after the award of contract.

SD-01 Data

Plant, Equipment, Machines, and Tools; FIO.

List of proposed equipment to be used in performance of construction work including descriptive data.

SD-09 Reports

Sampling and Testing; FIO. Field Density; FIO.

Calibration curves and related test results prior to using the device or equipment being calibrated. Copies of field test results within 24 hours after the tests are performed. Certified copies of test results for approval not less than 30 days before material is required for the work.

Waybills and Delivery Tickets; FIO.

Copies during construction. Copies for all material used, before final payment.

1.6 PLANT, EQUIPMENT, MACHINES, AND TOOLS

1.6.1 General Requirements

Plant, equipment, machines, and tools used in the work shall be subject to approval and shall be maintained in satisfactory working condition at all times. Other compacting equipment may be used in lieu of that specified, where it can be demonstrated that the results are equivalent. The equipment shall be adequate and have the capability of producing the results specified.

1.6.2 Mixing

The equipment for pulverizing and mixing the existing pavement surfaces shall be a self-propelled machine capable of pulverizing (In-Place) the existing pavement at a minimum width of 8 feet and mixing any added aggregate to a depth of up to 12 inches. The cutting drum shall have the ability to operate at various speeds(RPM), independent of the machine's forward speed, in order to control chunk size and gradation. The machine shall also have a breaker bar and/or mixture retention door on the cutting drum in order to help control mixture gradation and/or sizing.

1.6.3 Aggregate Spreading

To insure accuracy and uniformity, aggregate, if required, shall be placed

ahead of the pulverization process by means of a pull type paver box, pull type drop spreader, or self-propelled aggregate spreader. Gravity (tail gate) spreading of the aggregate is unacceptable, unless smoothed to a uniform and proper thickness by a motor grader.

1.6.4 Cement Spreading

Cement may be supplied in bulk or in bags and shall be applied at the discretion of the Contracting Officer. The typical application rate is 1%-1.5% by weight or 6.9-10.3 lbs./S.Y.. The cement shall be uniformly spread over any affected areas.

1.6.5 Recycled Base Course Placement/Grading

The RBC shall be placed by means of a conventional motor grader with automatic slope control, to the lines and grades established in the plans or proposal. Paving of this type is expected to be in accordance with acceptable base course products with a tolerance of not more than 0.05 foot of irregularity.

1.6.6 Compaction

The number, weight and type of rollers shall be sufficient to obtain the required compaction while the RBC is in a workable condition. When full depth reclaiming depths of 6 inches or more, breakdown rolling shall be performed with a large single drum vibratory pad-foot compactor w/blade. The roller shall be capable of applying 52,000 lbs. of centrifugal force minimum.

Intermediate and final compaction shall be performed with a large single drum smooth vibratory compactor, operating in vibratory and static mode. Said roller shall be capable of applying 52,000 lbs. of centrifugal force minimum in the vibratory mode.

1.6.7 Straightedge

The Contractor shall furnish and maintain at the site, in good condition, one 12-foot straightedge for each bituminous paver, for use in the testing of the finished surface. Straightedge shall be made available for Government use. Straightedges shall be constructed of aluminum or other lightweight metal and shall have blades of box or box-girder cross section with flat bottom reinforced to insure rigidity and accuracy. Straightedges shall have handles to facilitate movement on pavement.

1.7 SAMPLING AND TESTING

1.7.1 General Requirements

Testing shall be the responsibility of the Contractor and shall be performed at no additional cost to the Government. Testing shall be performed by an independent commercial testing laboratory that has been inspected by the National Institute of Standards and Technology (NIST) for compliance with ASTM E 329 and ASTM D 3740, as applicable. Testing personnel shall meet the requirements outlined in ASTM D 5255. No work requiring testing will be permitted until the personnel and testing facilities have been approved by the Contracting Officer. The first inspection shall be at the expense of the Government. Costs incurred for any subsequent inspection required because of failure of the facilities to pass the first inspection will be charged to the Contractor. Tests shall

be performed as specified herein after to insure that materials and compaction meet specified requirements. Field test information shall be submitted on a "Density Test Log" which shall include but not be limited to the following: test date, test number, feature of work, station/location, offset, elevation, inplace dry unit weight, moisture content, percent compaction, pass or fail, test method, and gradation.

1.7.2 Test Results

Copies of test results shall be furnished to the Contracting Officer within 24 hours of completion of tests. Results shall verify that materials comply with this specification. When a material source is changed, the new material will be tested for compliance. When deficiencies are found, the initial analysis shall be repeated and the material already placed shall be retested to determine the extent of unacceptable material. All in-place unacceptable material shall be replaced or modified as directed by the Contracting Officer.

1.7.3 Sampling

Aggregate samples for laboratory tests shall be taken in accordance with ASTM D 75.

1.7.4 Field Density with Moisture Content

Field in-place density shall be determined in accordance with ASTM D 1556 or ASTM D 2922. When ASTM D 2922 is used, the calibration curves shall be checked, and adjusted if necessary, using the sand cone method as described in paragraph Calibration of the ASTM publication. ASTM D 2922 results in a wet unit weight of soil, and when using this method, ASTM D 3017 shall be used to determine the moisture content of the soil. The calibration curves furnished with the moisture gauges shall be checked along with density calibration checks as described in ASTM D 3017. If ASTM D 2922 is used, in-place densities shall be checked by ASTM D 1556 and ASTM D 2216 at least once for every 5 nuclear density tests of completed base course. Calibration curves and calibration test results shall be furnished within 24 hours of the conclusion of the tests.

PART 2 PRODUCTS

2.1 MATERIALS

2.1.1 Pulverized Base Material

The pulverized asphalt/base material in the roadway, not including virgin aggregates, shall meet the following gradation requirements:

SIEVE SIZE	% PASSING
2"	100
#4	30-65
#200	0-10

2.1.2 Virgin Aggregates

The mineral aggregate shall be added for increased stability of the pulverized material. Aggregates shall consist of crushed stone, crushed gravel, angular sand, or other approved material. Aggregates shall be durable and sound, free from lumps of clay, organic matter, objectionable

coatings, and other foreign material. Coarse aggregates, consisting of angular fragments of uniform density and quality, shall have a percentage of wear not to exceed 40 percent after 500 revolutions when tested in accordance with ASTM C 131. The aggregate shall be purchased, delivered, and uniformly placed ahead of the pulverization process by the Contractor at the quantity recommended within the Project Job Mix Formula (JMF). A JMF shall be determined to provided a percentage of virgin aggregates needed to provide one square yard of a RBC material.

2.1.3 Water

Water shall be clean, fresh, and free from injurious amounts of oil, acid, salt, alkali, organic matter, other substances deleterious and shall be subject to approval.

2.1.4 Cement

In the event that cement is required, it shall meet the requirements of ASTM C 150, Type I. Low alkali cement shall be used for reactive aggregates. The typical application rate is 1%-1.5% by weight or 8.0-12.0 lbs./S.Y..

2.2 PROPORTIONING OF MIXTURE

2.2.1 Job Mix Formula

The Job Mix Formula (JMF) shall be based on an existing in-place asphalt/base material density and the amount of virgin aggregates and cement (if required) added to the mix to a specified depth of cut into the existing pulverized asphalt/base roadway.

2.2.2 Mixture

Combine the pulverized material, aggregates, and cement (if required), meeting the requirements specified, in such proportions that the total aggregate and cement in the base course conform to the JMF accepted by the Contracting Officer. Make field adjustments to the mix proportions under the guidance of the Contracting Officer to obtain a satisfactory recycled based course (RBC).

PART 3 EXECUTION

3.1 GENERAL REQUIREMENTS

Water shall be uniformly applied over the RBC materials during the compaction operation in the amount necessary to obtain proper densification. If during production rolling, the RBC material becomes unstable due to excess moisture, the material shall be aerated and allowed to dry to the point at which stability can be secured.

Rollers shall not be stopped and left sitting on uncompacted RBC. Rolling shall be established so that starting and stopping will be on previously compacted recycled material or on the existing bituminous roadway, if at all possible.

Any type of rolling that results in cracking, movement, or other types of pavement distress shall be discontinued until such time as the problem can be resolved. Discontinuation and commencement of rolling operations shall

be at the sole discretion of the Contracting Officer.

3.2 GRADE CONTROL

Finished stabilized base course with the subsequent surface course shall conform to the lines, grades, cross section, and dimensions indicated.

3.3 INSTALLATION

3.3.1 Mixing and Placing

Materials shall be mixed and placed in such a manner as to obtain uniformity of the stabilized base course material and at a uniform optimum water content for compaction. The Contractor shall make such adjustments in mixing or placing procedures or in equipment to obtain the true grades, to minimize segregation and degradation, to reduce loss or increase of water, and to ensure a satisfactory stabilized base course.

3.3.2 Edges of Stabilized Base Course

Approved material shall be placed along edges of stabilized base course in such quantities as will compact to thickness of the course being constructed, or to the thickness of each layer in a multiple layer course, allowing in each operation at least a 1-foot width of the shoulder to be rolled and compacted simultaneously with rolling and compacting of each layer of stabilized base course.

3.3.3 Compaction

Each layer of stabilized base course, including shoulders, shall be compacted. Water content shall be maintained at optimum. Density of compacted mixture shall be at least 100 percent of laboratory maximum dry density. Rolling shall begin at the outside edge of the surface and proceed to the center, overlapping on successive trips at least one-half the width of the roller. Alternate trips of the roller shall be slightly different lengths. Speed of the roller shall be such that displacement of the aggregate does not occur. Areas inaccessible to the rollers shall be compacted with mechanical tampers, and shall be shaped and finished by hand methods.

3.3.4 Layer Thickness

Compacted thickness of the stabilized base course shall be as indicated. No layer shall be in excess of 6 inches nor less than 3 inches in compacted thickness.

3.3.5 Finishing

The surface of the top layer shall be finished to grade and cross section shown. Finished surface shall be of uniform texture. Light blading during compaction may be necessary for the finished surface to conform to the lines, grades, and cross sections. Should the surface for any reason become rough, corrugated, uneven in texture, or traffic marked prior to completion, such unsatisfactory portion shall be scarified, reworked, recompacted, or replaced as directed.

3.3.5.1 Smoothness

Surface of each layer shall show no deviations in excess of 3/8 inch when

tested with the 12-foot straightedge. Deviations exceeding this amount shall be corrected by removing material and replacing with new material, or by reworking existing material and compacting, as directed.

3.3.5.2 Thickness Control

Compacted thickness of the base course shall be within l/2 inch of the thickness indicated. Where the measured thickness is more than l/2 inch deficient, such areas shall be corrected by scarifying, adding new material of proper gradation, reblading, and recompacting as directed. Where the measured thickness is more than l/2 inch thicker than indicated, the course shall be considered as conforming to the specified thickness requirements. Average job thickness shall be the average of all thickness measurements taken for the job, but shall be within l/4 inch of the thickness indicated. No additional compensation shall be forthcoming for average job thicknesses in excess of l/4 inch of the thickness indicated.

3.3.6 Field Quality Control

The frequency of sampling and testing shall be performed according to CESPK PAM 415-1-2 Construction Control Manual and as stated herein. Certified copies of test results shall be furnished to the Contracting Officer.

3.3.6.1 Field Density With Moisture Content

Perform two field density tests with moisture contents for each increment or fraction of 1000 square yards placed during each 8 hour shift.

3.3.6.2 Gradation With Atterberg Limits

Before starting work, at least one sample of material shall be tested for gradation and Atterberg limit compliance. After the initial test, perform two sets of tests, on compacted material, for every 5 field density tests.

3.3.6.3 Moisture-Density Relationship

Perform one moisture-density relationship test for every 5 field density tests (with not less than 1 test for each type of material).

3.3.6.4 Degradation Tests

One degradation test shall be run for every five field density tests (with not less than 1 test for each type of material).

3.3.6.5 Smoothness

Measurements for deviation from grade and cross section shown shall be taken in successive positions parallel to the road centerline with a 12-foot straightedge. Measurements shall also be taken perpendicular to the road centerline at 50 foot intervals.

3.3.6.6 Thickness

Thickness of the stabilized base course shall be measured at intervals in such a manner as to ensure one measurement for each 250 square yards of stabilized base course. Measurements shall be made by taking differential elevations at preselected locations between the subgrade and the top of the completed base course. Locations and subgrade elevations shall be delivered to the Contracting Officer prior to base course placement.

Locations and top of base course elevations shall be delivered to the Contracting Officer within 24 hours of stabilized base course completion.

3.3.7 Traffic

Completed portions of the area may be opened to traffic, provided there is no marring or distorting of the surface by the traffic. Heavy equipment shall not be permitted except when necessary to construction, and then the area shall be protected against marring or damage to the completed work.

3.3.8 Maintenance

The stabilized base course shall be maintained in a satisfactory condition until accepted. Maintenance shall include immediate repairs to any defects and shall be repeated as often as necessary to keep the area intact.

3.3.9 Disposal Of Unsatisfactory Materials

Removed in-place materials that are unsuitable for the base course material that is removed for the required correction of defective areas, and waste material and debris shall be disposed of as directed.

3.3.10 Weather Limitations

The weather and temperature limitations for this work shall be 50°F and rising with no standing water on the existing surface. No work shall be performed if there is a forecast of an atmospheric temperature below 32°F (0°C) within 24 hours from the time the RBC is applied.

-- End of Section --

SECTION TABLE OF CONTENTS

DIVISION 02 - SITE WORK

SECTION 02961

FULL DEPTH RECLAMATION - CEMENT/FLY ASH STABILIZATION

PART 1 GENERAL

1.1 PROCESS DESCRIPTION
1.2 SCOPE OF WORK
1.3 REFERENCES
1.4 MEASUREMENT AND PAYMENT
1.5 SUBMITTALS
1.6 DEGREE OF COMPACTION
1.7 PLANT, EQUIPMENT, MACHINES, AND TOOLS
1.7.1 General Requirements
1.7.2 Pulverizer and Mixer
1.8 WEATHER LIMITATIONS

PART 2 PRODUCTS

2.1 MATERIALS
2.1.1 Cement
2.1.2 Bituminous Material
2.1.3 Fly Ash
2.1.4 Pulverized Asphalt/Base Material
2.1.5 Water

PART 3 EXECUTION

3.1 MIX DESIGN
3.1.1 General
3.1.2 Sieve Analysis and Plasticity Index
3.1.3 Moisture-Density Tests
3.1.4 Compressive Strength Tests
3.2 GENERAL CONSTRUCTION REQUIREMENTS
3.3 PREPARATION OF AREA TO BE STABILIZED
3.4 PULVERIZION, MIXING & CEMENT/FLY ASH APPLICATION
3.4.1 Water Application and Moist Mixing
3.4.2 Layer Thickness
3.5 COMPACTION
3.6 FINISHING
3.7 CONSTRUCTION JOINTS
3.8 CURING AND PROTECTION
3.8.1 Moist Curing
3.9 BITUMINOUS MATERIAL
3.10 FIELD QUALITY CONTROL
3.10.1 General
3.10.2 Gradations, Atterberg Limits, and Moisture Contents
3.10.3 Cement Content Control
3.10.3.1 Spot Check
3.10.3.2 Overall Check

3.10.4 Preparation for Placing
3.10.5 Placing
3.10.6 In Place Density Tests
3.10.7 Compressive Strengths
3.10.8 Grade Control
3.10.9 Smoothness Test
3.10.10 Thickness Control
3.10.11 Protection
3.10.12 Traffic
3.11 DISPOSAL OF UNSATISFACTORY MATERIALS

-- End of Section Table of Contents --

SECTION 02961

FULL DEPTH RECLAMATION - CEMENT/FLY ASH STABILIZATION

PART 1 GENERAL

1.1 PROCESS DESCRIPTION

The Full Depth Reclamation (FDR) process consists of a series of steps that include pulverization and mixing of the existing asphalt surface with the aggregate base and subgrade soil. An additive or additives and water are blended with the pulverized pavement which is then graded and compacted. The pulverization and mixing operations normally are completed with large, high horsepower (up to 485 kW/650 hp) road reclaiming machines. The depth of FDR depends upon the existing pavement thickness, subgrade soil conditions and expected future traffic but typically is from 6 to 12 inches. For projects with thicker asphalt sections of 8 inches or more, and a base capable of supporting the equipment, the FDR may be completed with a cold in-place recycling train. The train consists of a cold milling machine towing trailer mounted screening/crushing and mixing plants. Three different stabilizations are used: **Mechanical**, **Cement/Fly Ash** and **Asphalt**.

1.2 SCOPE OF WORK

Work shall consist of pulverizing the existing asphalt concrete surface course and the underlying granular base material to the specified length, width, and depth. Once pulverized, the material is combined with Portland cement, fly ash and water and uniformly mixed, placed, compacted, finished and cured. The completed course shall conform to the grades, thickness and cross-sections as shown on the plans and as provided herein to create an "In-Place" Portland cement stabilized base course (SBC).

1.3 REFERENCES

The publications listed below form a part of this specification to the extent referenced. The publications are referred to in the text by basic designation only.

AMERICAN SOCIETY FOR TESTING AND MATERIALS (ASTM)

ASTM C 136	(1996a) Sieve Analysis of Fine and Coarse Aggregates
ASTM C 150	(1996) Portland Cement
ASTM C 511	(1996) Moist Cabinets, Moist Rooms, and Water Storage Tanks Used in the Testing of Hydraulic Cements and Concretes
ASTM C 618	(1997) Coal Fly Ash and Raw or Calcined Natural Pozzolan for Use as a Mineral Admixture in Concrete
ASTM D 244	(1993) Emulsified Asphalts

ASTM D 5	(1995) Penetration of Bituminous Materials
ASTM D 113	(1986, R 1992) Ductility of Bituminous Materials
ASTM D 139	(1990) Float Test for Bituminous Materials
ASTM D 558	(1996) Moisture-Density Relations of Soil-Cement Mixtures
ASTM D 977	(1991) Emulsified Asphalt
ASTM D 979	(1996) Sampling Bituminous Paving Mixtures
ASTM D 1556	(1990, R 1996) Density and Unit Weight of Soil in Place by the Sand-Cone Method
ASTM D 1557	(1991) Laboratory Compaction Characteristics of Soil Using Modified Effort (56,000 ft-lbf/cu. ft. (2,700 kN-m/cu. m.))
ASTM D 1632	(1996) Making and Curing Soil-Cement Compression and Flexure Test Specimens in the Laboratory
ASTM D 1633	(1996) Compressive Strength of Molded Soil-Cement Cylinders
ASTM D 2042	(1981, R 1993) Solubility of Asphalt Materials in Trichlorethylene
ASTM D 2172	(1995) Quantitative Extraction of Bitumen from Bituminous Paving Mixtures
ASTM D 2216	(1992) Laboratory Determination of Water (Moisture) Content of Soil and Rock
ASTM D 3666	(1993) Minimum Requirements for Agencies Testing and Inspection Bituminous Paving Materials
ASTM D 2922	(1996) Density of Soil and Soil-Aggregate in Place by Nuclear Methods (Shallow Depth)
ASTM D 3017	(1988; R 1993) Water Content of Soil and Rock In Place by Nuclear Methods (Shallow Depth)
ASTM D 4318	(1995a) Liquid Limit, Plastic Limit, and Plasticity Index of Soils
ASTM E 11	(1995) Wire-Cloth Sieves for Testing Purposes

1.4 MEASUREMENT AND PAYMENT

The quantity of base course completed and accepted after recycling,

stabilizing with Portland cement, fly ash and water, mixing, placing, compacting, finishing and curing will be measured to the closest square yard of surface area. The number of square yards will be determined by measuring the width and length, to the closest inch for width and the closest foot for length. There is no line item for this work in the Pricing Schedule; quantities of the completed course will be paid for at the negotiated contract unit price per square yard.

1.5 SUBMITTALS

Government approval is required for submittals with a "GA" designation; submittals having an "FIO" designation are for information only. The following shall be submitted in accordance with Section 01330 SUBMITTAL PROCEDURES:

SD-01 Data

Mix Design; GA.

Proposed mix design, prior to start of stabilization work.

Plant, Equipment, Machines, and Tools; FIO.

List of proposed equipment to be used in performance of construction work, including descriptive data.

SD-08 Statements

Bituminous Material; FIO.

Certified copies of the manufacturer's test reports indicating compliance with applicable specified requirements, not less than 30 days before the material is required in the work.

SD-09 Reports

Field Quality Control; FIO. Pulverized Asphalt/Base Material; FIO. Fly Ash; FIO.

Calibration curves and related test results, prior to using the device or equipment being calibrated. Copies of field tests results within 24 hours after the tests are performed. Certified copies of test results, not less than 30 days before material is required for the work.

1.6 DEGREE OF COMPACTION

Degree of compaction is expressed as a percentage of the maximum dry density obtained by the test procedure in accordance with ASTM D 1557, Procedure C, abbreviated herein as percent laboratory maximum density.

1.7 PLANT, EQUIPMENT, MACHINES, AND TOOLS

1.7.1 General Requirements

Plant, equipment, machines, and tools used in the work shall be subject to approval and shall be maintained in a satisfactory working condition at all times. The equipment shall be adequate and shall have the capability of

producing the required compaction, meeting grade controls, thickness control and smoothness requirements as set forth herein.

1.7.2 Pulverizer and Mixer

The equipment for pulverizing and mixing the existing pavement surfaces shall be a self-propelled machine capable of pulverizing (In-Place) the existing pavement at a minimum width of 8 feet and mixing any added aggregate to a depth of up to 12 inches. The cutting drum shall have the ability to operate at various speeds(RPM), independent of the machine's forward speed, in order to control chuck size and gradation.

The machine shall be capable of pushing a water supply tanker or distributor and shall be equipped with a computerized integral liquid proportioning system capable of regulating and monitoring the water application rate relative to depth of cut, width of cut and speed. The water pump on the machine shall be connected by a hose to the supply tanker/distributor, and shall be mechanically or electronically interlocked with the forward movement/ground speed of the machine. The spray bar shall be mounted in such a manner as to allow the water to be injected directly into the cutting drum/mixing chamber. The equipment shall be capable of mixing the water, dry additives(cement and fly ash) and the pulverized pavement into a homogenous mixture. The cutting drum shall be fully maintained and in good condition at all times throughout the job.

Before other construction operations are begun, there may be portions of the roadway, especially those which are severely rutted or deformed, that will require pulverization, grading, and shaping prior to the stabilization process to conform with the lines, grades, thickness, and typical cross section as shown on the plans or stated herein.

1.8 WEATHER LIMITATIONS

Cement shall not be applied when the atmospheric temperature is less than 40 degrees F. Cement shall not be applied to soils that are frozen or contain frost, or when the underlying material is frozen. If the temperature falls below 35 degrees F, completed cement-treated areas shall be protected against detrimental effects of freezing. Any areas of completed base or subbase that are damaged by freezing, rainfall, or other weather conditions shall be brought to a satisfactory condition in conformance with this specification without additional cost to the Government.

PART 2 PRODUCTS

2.1 MATERIALS

2.1.1 Cement

Cement shall conform to ASTM C 150, Type I. Low alkali cement shall be used for reactive aggregates.

2.1.2 Bituminous Material

Bituminous material for curing coat shall be emulsified asphalt conforming to ASTM D 977, Type RS-1.

2.1.3 Fly Ash

The fly ash to be used for this project shall meet the requirements of ASTM C 618, Mineral Admixture Class C.

2.1.4 Pulverized Asphalt/Base Material

The pulverized asphalt/base material, including the addition of virgin aggregates, if required, shall meet the following gradation requirements:

SIEVE SIZE	PERCENT PASSING
2"	100
No. 4	30-65
No. 200	0-10

2.1.5 Water

Water shall be clean, fresh, and potable.

PART 3 EXECUTION

3.1 MIX DESIGN

Mix shall be developed using the pulverized asphalt concrete/base material at the work site and the additives listed above in materials. Mix shall have a minimum 7-day compressive strength of 750 psi.

3.1.1 General

All laboratory tests required for design of the soil-cement mix shall be provided by the Contractor. All such tests requiring the addition of water to the soil-cement/fly ash mixture shall use water from the same approved source that will be used in the field for construction of the soil-cement course. The tests shall be performed by an approved commercial testing laboratory. Copies of the test results shall be furnished to the Contracting Officer within 24 hours of completion of tests.

3.1.2 Sieve Analysis and Plasticity Index

Sieve analysis and the determination of plasticity index shall be performed on a representative sample of soil obtained from the material to be stabilized. Sieve analysis shall be performed in accordance with ASTM C 136 using sieves conforming to ASTM E 11 and shall include a 2-inch sieve. The plasticity index shall be determined in accordance with ASTM D 4318.

3.1.3 Moisture-Density Tests

The Contractor shall conduct moisture-density tests in accordance with the procedures contained in ASTM D 558; however, the apparatus (4 inch or 6 inch diameter mold) and the compactive effort (56,000 ft-lbf/cubic foot) shall be as described in ASTM D 1557 to compact the soil-cement mixture.

3.1.4 Compressive Strength Tests

Samples for compressive strength tests shall be prepared in accordance with ASTM D 1632. Prepare at least 15 specimens; 5 at three different cement contents by weight of dry soil. The cement contents may be selected using the guidance provided in the Portland Cement Association publication, SOIL-CEMENT LABORATORY HANDBOOK. Prepare the specimens at optimum moisture

and maximum density, and measure and record the moisture content, dry density, and wet density. The specimens shall be cured at a constant moisture content and temperature for 7 days in an environment meeting the requirements of ASTM C 511. Unconfined compressive strength tests shall be performed on the prepared soil-cement samples, in accordance with ASTM D 1633, Method B, immediately after the seventh day of curing.

3.2 GENERAL CONSTRUCTION REQUIREMENTS

Cement shall not be applied if the soil moisture content exceeds optimum moisture content specified for the cement-treated mixture. After mixing is completed, the proportions of the mixture shall be in accordance with the approved mix design. When application of water and mixing are completed, on the basis of dry weight, moisture shall not be below the optimum moisture content of the mixture nor shall it be more than 2 percent above the optimum moisture content. When the stabilized course is constructed in more than 1 layer, the previously constructed layer shall be cleaned of loose and foreign matter by sweeping with power sweepers or power brooms, except that hand brooms may be used in areas where power cleaning is not practicable. Adequate drainage shall be provided during the entire construction period to prevent water from collecting or standing on the areas to be stabilized or on pulverized, mixed, or partially mixed material. Line and grade stakes shall be provided as necessary for control. Grade stakes shall be placed in lines parallel to the centerline of the area under construction and suitably spaced for string lining.

3.3 PREPARATION OF AREA TO BE STABILIZED

Pavement to be recycled shall be cleared of debris, plastic lane markers and anything else not intended to be blended with the mixture of asphalt surface, base course and emulsified asphalt. Before other construction operations are begun, there may be portions of the roadway, especially those which are severely rutted or deformed, that will require pulverization, grading, and shaping prior to the stabilization process in order to construct the soil-cement/fly ash base in conformance with the grades, thickness and typical cross section shown on the plans or stated in these specifications.

3.4 PULVERIZION, MIXING & CEMENT/FLY ASH APPLICATION

The pulverization pass shall be to the maximum depth possible without penetrating the underlying subgrade course. Unless otherwise permitted, the area scarified and pulverized shall not exceed the area that can be completed in 2 working days. Pulverized material shall be shaped approximately to the cross section indicated. Cement shall be applied so that when uniformly mixed with the soil, the specified cement content is obtained, and a sufficient quantity of cement-treated soil is produced to construct a compacted cement-treated course conforming to the lines, grades, and cross section indicated. Equipment, except that used in spreading and mixing operations, shall not pass over the freshly spread soil cement. Immediately after the cement has been distributed, it shall be mixed with the soil. The cement shall not be mixed below the required depth. Mixing shall continue until the cement has been sufficiently blended with the soil to prevent the formation of cement balls when water is applied.

3.4.1 Water Application and Moist Mixing

Moisture content of the mixture shall be determined immediately after

completion of mixing of the soil and cement. Water-supply and pressure distributing equipment shall be provided that will permit the continuous application within 3 hours of all water required on the section being processed. Water shall be incorporated in the mix so that concentration of water near the surface does not occur. After all the mixing water has been added, mixing shall be continued until the water is uniformly distributed throughout the full depth of the mixture, with no portion of the mixture remaining undisturbed during mixing for more than 30 minutes. Any portion of the mixture remaining undisturbed more than 30 minutes during mixing shall be disposed of as specified. Satisfactory moisture distribution shall occur along the edges of the section.

3.4.2 Layer Thickness

Compacted thickness of the stabilized course shall be as indicated. No layer shall be in excess of 8 inches nor less than 4 inches in compacted thickness.

3.5 COMPACTION

Compaction shall commence immediately after mixing is completed. Each layer shall be uniformly compacted to a density of at least 100 percent maximum density, where maximum density is measured in accordance with ASTM D 1557. At the time of compaction the moisture content shall not be less than 1 percentage point below optimum; shall be less than that which will cause the soil-cement to become unstable during compaction and finishing operations; and shall not be more than 2 percentage points above optimum. Rolling shall begin at the outside edge of the surface and proceed to the center, overlapping on successive trips at least one-half the width of the roller. Alternate trips of the roller shall be slightly different lengths. Speed of the roller at all times shall be such that displacement of the mixture does not occur.

The moisture content shall be uniform throughout the layer of material being compacted. At no time shall water be added during compaction operations to the uncompacted soil-cement mixture. If in the opinion of the Contracting Officer, the surface of a layer of soil-cement has been rutted or compacted by hauling equipment to the degree it reduces the effectiveness of compaction by the specified compactors, the Contractor will be required to scarify such surfaces as directed prior to compacting with the specified compactors. No section shall be left undisturbed for longer than thirty minutes during compaction operations. Compaction shall be done in such a manner as to produce a dense surface, free of compaction planes in not longer than one (l) hour from the time water is added to the mixture.

3.6 FINISHING

The surface shall be moistened, if necessary, and shaped to the required lines, grades, and cross section. If necessary, the surface shall be lightly scarified to eliminate any imprints made by the compactor or shaping equipment. The surface shall then be thoroughly compacted to the specified density with rubber-tired rollers and smooth-wheel tandem rollers to the extent necessary to provide a smooth, dense, uniform surface that is free of surface checking, ridges, or loose material, and that conforms to the crown, grade, and line indicated. These finishing operations shall be completed within 2 hours after completion of mixing operations. In places not accessible to finishing and shaping equipment, the mixtures shall be compacted with mechanical tampers to the density specified and shall be

shaped and finished by hand methods. Any portion of the compacted mix that has density less than that specified, that has not properly hardened, or that is improperly finished shall be corrected as specified below.

3.7 CONSTRUCTION JOINTS

At the end of each day's construction, a straight transverse construction joint shall be formed by cutting back into the completed work to form a true vertical face free of loose or shattered material. Material along construction joints not properly compacted shall be removed and replaced with soil-cement/fly ash that is mixed, moistened, and compacted in accordance with this specification.

3.8 CURING AND PROTECTION

The finished surface shall be protected against rapid drying for 7 days by one of the methods specified.

3.8.1 Moist Curing

A 2 inch covering of soil or not less than 4 pounds per square yard of straw shall be applied. The material shall be moistened initially and kept moistened throughout the curing period. In multiple-layer construction, the soil or an approved select material used to moist cure, may also be used for constructing the succeeding stabilized course.

3.9 BITUMINOUS MATERIAL

Bituminous material shall be uniformly applied by means of a bituminous distributor within a temperature range of 75 to 130 degrees F, as directed. Bituminous material for curing shall be uniformly applied at the rate of 0.2 to 0.25 gallon per square yard. Areas inaccessible to or missed by the distributor shall be properly treated using the manually operated hose attachment. Bituminous material shall be applied only to the top layer. At the time the bituminous material is applied, the surface shall be free of loose or foreign matter and shall contain sufficient moisture to prevent excessive penetration of the bituminous material. When necessary, water in sufficient quantity to fill the surface voids shall be applied immediately before the bituminous material is applied. Treated surface shall be sanded or dusted to prevent the bituminous material from being picked up by traffic.

3.10 FIELD QUALITY CONTROL

3.10.1 General

Field tests shall be performed in sufficient numbers to assure that the specifications are being met. Quality control testing shall be the responsibility of the Contractor. The following number of tests, performed at the appropriate time, will be the minimum acceptable for each type of operation.

3.10.2 Gradations, Atterberg Limits, and Moisture Contents

At least once during each shift, there shall be a gradation analysis, a moisture content, and a set of Atterberg limits performed in accordance with ASTM C 136, ASTM D 2216, and ASTM D 4318, respectively, on the material being stabilized. The location at which samples are taken may be selected by the Contractor as the most advantageous for control.

3.10.3 Cement Content Control

The quantity of bulk cement that is spread shall be checked in two ways; spot checks and overall checks.

3.10.3.1 Spot Check

To spot check, a sheet of canvas, usually 1 square yard in area, is placed ahead of the cement spreader. After the spreader has passed, the canvas and cement is weighed. The spreader is then adjusted if necessary and the procedure repeated until the correct spread per square yard is obtained.

3.10.3.2 Overall Check

The overall check is made by measuring the area over which a truckload of cement of known weight is spread. This actual area is then compared with the theoretical area, which the known quantity of cement should have covered. The spreader is first adjusted at the start of construction after checking the cement spread per square yard with the canvas. Slight adjustments are made by checking the distance over which each truckload is spread. A continuous check on cement spreading operations shall be kept.

3.10.4 Preparation for Placing

The subgrade and the construction joints shall be inspected in sufficient time prior to each soil-cement/fly ash placement by the Contractor in order to certify to the Contracting Officer that the existing surface is ready to receive soil-cement.

3.10.5 Placing

The placing foreman shall supervise all placing operations and shall be responsible for measuring and recording ambient temperature, weather conditions, time of placement, yardage placed, and method of placement.

3.10.6 In Place Density Tests

One density test conforming to ASTM D 1556 or ASTM D 2922 shall be performed for each 280-foot length of an 8-foot wide paving lane, which is equivalent to one test per 250 square yards of soil cement constructed. Tests shall be performed immediately after rolling. Test ASTM D 2922 results in a wet unit weight of soil, and when using this method, ASTM D 3017 shall be used to determine the moisture content of the soil. Calibration curves furnished along with the density gauge shall be checked as described in ASTM D 3017. Calibration checks of the density gauge shall be made at the beginning of a job on each type of material encountered. If ASTM D 2922 is used, in-place densities shall be checked by ASTM D 1556 at least once for each nuclear test until correlation is established between the two test methods. Following adequate correlation, ASTM D 1556 shall be used to check nuclear tests at a frequency of one per every 5 nuclear tests. Calibration curves and calibration test results shall be furnished within 24 hours of conclusion of the tests. The locations of tests shall be randomly distributed throughout the soil-cement which has been placed. The Contracting Officer shall be immediately notified of all density test results. A complete written report of test results shall be supplied to the Contracting Officer within 24 hours of sampling.

3.10.7 Compressive Strengths

At least one compressive strength test (two cylinders each) shall be conducted for each 250 cubic yards of soil-cement placed, and no less than two tests per shift. Tests shall determine the seven (7) day compressive strength in accordance with ASTM D 1633, Method B.

3.10.8 Grade Control

Underlying material shall be excavated to sufficient depth for the required stabilized-course thickness so that the finished stabilized course with the subsequent surface course will meet the fixed grade. Finished and completed stabilized area shall conform to the lines, grades, cross section, and dimensions indicated.

3.10.9 Smoothness Test

The surface of a stabilized layer shall show no deviations in excess of 3/8 inch when tested with the 12-foot straightedge. Deviations exceeding this amount shall be corrected by removing material and replacing new material, or by reworking existing material and compacting, as directed. Measurements for deviation from grade and cross section shown shall be taken in successive positions parallel to the road centerline with a 12-foot straightedge. Measurements shall also be taken perpendicular to the area centerline at 50-foot intervals.

3.10.10 Thickness Control

The completed thickness of the stabilized course shall be within 1/2 inch of the thickness indicated. Where the measured thickness is more than 1/2 inch deficient, such areas shall be corrected by scarifying, adding mixture of proper gradation, reblading, and recompacting as directed. Where the measured thickness is more than 1/2 inch thicker than indicated, the course shall be considered as conforming with the specified thickness requirements. Average job thickness shall be the average of all thickness measurements taken for the job, but shall be within 1/4 inch of the thickness indicated. The thickness of the stabilized course shall be measured at intervals in such a manner as to ensure one measurement for each 100 square yards of stabilized course. Measurements shall be made by taking differential elevations between the subgrade and top of the stabilized course at preselected locations.

3.10.11 Protection

At least once each shift, an inspection shall be made of all areas subject to protection from adverse weather or flows. Deficiencies shall be corrected.

3.10.12 Traffic

Completed portions of the cement-treated soil area may be opened immediately to light traffic provided the curing is not impaired. After the curing period has elapsed, completed areas may be opened to all traffic provided that the cement-stabilized course has hardened sufficiently to prevent marring or distorting of the surface by equipment or traffic. Heavy equipment shall not be permitted on the area during the curing period. Cement and water may be hauled over the area with pneumatic-tired equipment as approved. Finished portions of cement-stabilized soil that are traveled on by equipment used in constructing an adjoining section shall be protected in a manner so as to prevent equipment from marring or

damaging the completed work.

3.11 DISPOSAL OF UNSATISFACTORY MATERIALS

Removed in-place materials that are unsuitable for stabilization, material that is removed for the required correction of defective areas, waste material, and debris shall be disposed of off of Government-controlled land at the completion of construction.

-- End of Section --

SECTION TABLE OF CONTENTS

DIVISION 02 - SITE WORK

SECTION 02962

FULL DEPTH RECLAMATION - ASPHALT STABILIZATION

PART 1 GENERAL

1.1 PROCESS DESCRIPTION
1.2 SCOPE OF WORK
1.3 REFERENCES
1.4 MEASUREMENT AND PAYMENT
1.5 SUBMITTALS
1.6 DEGREE OF COMPACTION
1.7 PLANT, EQUIPMENT, MACHINES, AND TOOLS
1.7.1 General Requirements
1.7.2 Pulverizer, Mixer and Distributor
1.7.3 Compactor Rollers
1.8 WEATHER LIMITATIONS

PART 2 PRODUCTS

2.1 MATERIALS
2.1.1 Emulsified Asphalt Stabilizing Additive
2.1.2 Pulverized Asphalt/Base Material
2.1.3 Water

PART 3 EXECUTION

3.1 JOB MIX FORMULA
3.2 GENERAL CONSTRUCTION REQUIREMENTS
3.3 PULVERIZING, MIXING & APPLYING ASPHALT EMULSION
3.4 PLACING AND GRADING
3.5 COMPACTION
3.6 FINISHING
3.6.1 Smoothness
3.6.2 Thickness Control
3.7 CONSTRUCTION JOINTS
3.8 CURING
3.9 SAMPLING AND TESTING
3.9.1 Field Density
3.9.2 Gradations, Atterberg Limits, and Moisture Contents
3.9.3 Extraction Test
3.9.4 Smoothness Test
3.9.5 Thickness
3.10 MAINTENANCE

-- End of Section Table of Contents --

SECTION 02962

FULL DEPTH RECLAMATION - ASPHALT STABILIZATION

PART 1 GENERAL

1.1 PROCESS DESCRIPTION

The Full Depth Reclamation (FDR) process consists of a series of steps that include pulverization and mixing of the existing asphalt surface with the aggregate base and subgrade soil. An additive or additives and water are blended with the pulverized pavement which is then graded and compacted. The pulverization and mixing operations normally are completed with large, high horsepower (up to 485 kW/650 hp) road reclaiming machines. The depth of FDR depends upon the existing pavement thickness, subgrade soil conditions and expected future traffic but typically is from 6 to 12 inches. For projects with thicker asphalt sections of 8 inches or more, and a base capable of supporting the equipment, the FDR may be completed with a cold in-place recycling train. The train consists of a cold milling machine towing trailer mounted screening/crushing and mixing plants. Three different stabilizations are used: **Mechanical**, **Cement/Fly Ash** and **Asphalt**.

1.2 SCOPE OF WORK

Work shall consist of pulverizing the existing asphalt concrete surface course and the underlying granular base material to the specified length, width, and depth. Once pulverized, the material shall be used to establish proper grade and cross-slope. Next, the material is stabilized with an asphalt emulsion, placed, and compacted as shown on the plans and as provided herein to create an "In-Place" Stabilized Base Course (SBC).

1.3 REFERENCES

The publications listed below form a part of this specification to the extent referenced. The publications are referred to in the text by basic designation only.

AMERICAN SOCIETY FOR TESTING AND MATERIALS (ASTM)

ASTM D 5	(1995) Penetration of Bituminous Materials
ASTM D 113	(1986, R 1992) Ductility of Bituminous Materials
ASTM D 139	(1990) Float Test for Bituminous Materials
ASTM D 244	(1993) Emulsified Asphalts
ASTM D 979	(1996) Sampling Bituminous Paving Mixtures
ASTM D 1556	(1990, R 1996) Density and Unit Weight of Soil in Place by the Sand-Cone Method
ASTM D 1557	(1991) Laboratory Compaction Characteristics of Soil Using Modified

	Effort (56,000 ft-lbf/cu. ft. (2,700 kN-m/cu. m.))
ASTM D 2042	(1981, R 1993) Solubility of Asphalt Materials in Trichlorethylene
ASTM D 2172	(1995) Quantitative Extraction of Bitumen from Bituminous Paving Mixtures
ASTM D 3666	(1993) Minimum Requirements for Agencies Testing and Inspection Bituminous Paving Materials

DEPARTMENT OF THE ARMY, CORPS OF ENGINEERS

CESPK PAM 415-1-2	Construction Control Manual

1.4 MEASUREMENT AND PAYMENT

The quantity of base course completed and accepted following recycling, stabilizing with asphalt, mixing and placing will be measured to the closest square yard of surface area. The number of square yards will be determined by measuring the width and length, to the closest inch for width and the closest foot for length. There is no item for this work in the Pricing Schedule; quantities of the completed course will be paid for at the negotiated contract unit price per square yard.

1.5 SUBMITTALS

Government approval is required for submittals with a "GA" designation; submittals having an "FIO" designation are for information only. The following shall be submitted in accordance with Section 01330 SUBMITTAL PROCEDURES:

SD-01 Data

Job Mix Formula; GA.

Job mix formula at least 30 days before it is to be used.

Plant, Equipment, Machines, and Tools; FIO.

List of proposed equipment to be used in performance of construction work, including descriptive data.

SD-08 Statements

Emulsified Asphalt Stabilizing Additive; FIO.

Notification upon selection of the emulsified asphalt stabilizing additive.

SD-09 Reports

Sampling and Testing; FIO. Pulverized Asphalt/Base Material; FIO

Calibration curves and related test results, prior to using the device or equipment being calibrated. Copies of field tests results within 24 hours

after the tests are performed. Certified copies of test results, not less than 30 days before material is required for the work.

1.6 DEGREE OF COMPACTION

Degree of compaction is expressed as a percentage of the maximum dry density obtained by the test procedure in accordance with ASTM D 1557, Procedure C, abbreviated herein as percent laboratory maximum density.

1.7 PLANT, EQUIPMENT, MACHINES, AND TOOLS

1.7.1 General Requirements

Plant, equipment, machines, and tools used in the work shall be subject to approval and shall be maintained in a satisfactory working condition at all times. The equipment shall be adequate and shall have the capability of producing the required compaction, meeting grade controls, thickness control and smoothness requirements as set forth herein.

1.7.2 Pulverizer, Mixer and Distributor

The equipment for pulverizing and mixing the existing pavement surfaces shall be a self-propelled machine capable of pulverizing (In-Place) the existing pavement at a minimum width of 8 feet and mixing any added aggregate to a depth of up to 12 inches. The cutting drum shall have the ability to operate at various speeds(RPM), independent of the machine's forward speed, in order to control chuck size and gradation.

The machine shall be capable of pushing an asphalt emulsion supply tanker or distributor(to be supplied by Contractor) and shall be equipped with a computerized integral liquid proportioning system capable of regulating and monitoring the liquid application rate relative to depth of cut, speed, and other additives. The asphalt pump on the machine shall be connected by a hose to the supply tanker/distributor, and shall be mechanically or electronically interlocked with the forward movement/ground speed of the machine. The spray bar shall be mounted in such a manner as to allow the asphalt emulsion to be injected directly into the cutting drum/mixing chamber. The equipment shall be capable of mixing the liquid additives and the pulverized pavement into a homogenous mixture. The cutting drum shall be fully maintained and in good condition at all times throughout the job.

1.7.3 Compactor Rollers

The number, weight and type of rollers shall be sufficient to obtain the required compaction while the RBC is in a workable condition. When cold in place recycling/reclaiming depths of 6 inches or more, breakdown rolling shall be performed with a large single drum vibratory pad-foot compactor w/blade. This roller shall be capable of applying 52,000 pounds of centrifugal force minimum.

Intermediate compaction shall be performed with a 30 ton pneumatic roller equipped with a watering device to prevent material from adhering to the tires. Rolling shall be performed until no displacement is discerned. Final rolling to eliminate pneumatic tire marks and achieve density shall be done by a 10 to 15 ton single or double-drum vibratory steel wheel roller operating in static mode.

1.8 WEATHER LIMITATIONS

The atmospheric temperature for this work shall be 50 degrees F and rising. No work shall be performed if there is a forecast of atmospheric temperature below 32 degrees F within 24 hours from the time of completion of recycled base course.

PART 2 PRODUCTS

2.1 MATERIALS

2.1.1 Emulsified Asphalt Stabilizing Additive

Emulsified asphalt shall be an anionic-type "High Float" Cold In-Place Recycling Emulsion (HF-RE). In order to insure proper dispersion and stability with the mix, the emulsion may need to be adapted to the needs of the pavement to be recycled and to the amount of base materials and/or virgin aggregate to be added by changing the emulsion flux and/or recycling agents. The quantity of asphalt emulsion required per square yard for the project specified herein has been established by the project's Job Mix Formula(JMF). The asphalt emulsion shall meet the following requirements:

HF-RE (HIGH FLOAT-RECYCLING EMULSION)

Property	Minimum	Maximum	Test Method
Viscosity(Saybolt Furol) @ 77 Deg. F, seconds	20	300	ASTM D 244
Sieve Test, %	<0.1	---	ASTM D 244
Residue % by Distillation	65	---	ASTM D 244
Oil Distillation by Volume of Emulsion, %	0	5	ASTM D 244
Storage Stability	0	1	ASTM D 244
Coating Ability and Water Resistance Coating, Wet RAP	Good		ASTM D 244
Tests on Residue by Distillation Test:			
Penetration, 25 Deg. C, 100 g. 5 sec.	100	200	ASTM D 5
Ductility, 25 Deg. C, 5 cm/min., cm	40+		ASTM D 113
Solubility in Trichloroethylene %	97.5	---	ASTM D 2042
Float Test, 60 Deg. C, sec.	1200+	---	ASTM D 139

2.1.2 Pulverized Asphalt/Base Material

The pulverized asphalt/base material, including the addition of virgin aggregates, if required, shall meet the following gradation requirements:

SIEVE SIZE	PERCENT PASSING
2"	100
No. 4	30-65
No. 200	0-10

2.1.3 Water

Water shall be clean, fresh, and potable.

PART 3 EXECUTION

3.1 JOB MIX FORMULA

Contractor shall develop and submit for approval a proposed job mix formula prior to beginning work. Mix shall be developed using existing asphalt and base course materials which were pulverized in place at actual work locations. Job mix formula shall be capable of producing a CBR bearing value in accordance with following applications:

Application	CBR Value
Base Course(Roads/Parking Areas)	50
Base Course(Airfields)	80

3.2 GENERAL CONSTRUCTION REQUIREMENTS

Pavement to be recycled shall be cleared of debris, plastic lane markers and anything else not intended to be blended with the mixture of asphalt surface, base course and emulsified asphalt. The contractor shall provide all necessary labor, equipment, and emulsion, as required, to pulverize, mix, place and compact the recycled asphalt/base course.

3.3 PULVERIZING, MIXING & APPLYING ASPHALT EMULSION

Two pulverization passes are required. The initial pass shall be to the maximum depth possible without penetrating the underlying subgrade course. The depth of cut into the existing pulverized asphalt/base for the stabilization pass (Pass #2) shall be to the depth required to uniformly treat the pulverized material with asphalt emulsion. Rate of application of asphalt emulsion shall be sufficient to meet the requirements of job mix formula. The pulverized material shall meet the gradation requirements of paragraph 2.1.2 Pulverized Asphalt/Base Material.

3.4 PLACING AND GRADING

The recycled asphalt concrete/base course shall be placed in layers of uniform thickness with an approved conventional motor grader with automatic slope control or other approved equipment. When a compacted layer 6 inches or less in thickness is required, the material shall be placed in a single layer. When a compacted layer in excess of 6 inches is required, the material shall be placed in layers of equal thickness. No layer shall exceed 6 inches or be less than 3 inches when compacted. The layers shall be so placed that when compacted they will be true to the grades or levels required with the least possible surface disturbance. Where the course is placed in more than one layer, the previously constructed layers shall be cleaned of loose and foreign matter by sweeping with power sweepers, power brooms, or hand brooms, as directed. Such adjustments in placing procedures or equipment shall be made as may be directed to obtain true grades, to minimize segregation and degradation, to adjust the water content, and to insure an acceptable course.

3.5 COMPACTION

The mixture shall be shaped approximately to the specified lines and grades and thoroughly loosened to its full depth and width. Rolling shall begin at the outside edge of the surface and proceed to the center, overlapping on successive trips at least one-half the width of the roller. Alternate trips of the roller shall be slightly different lengths. The speed of the roller shall be such that displacement of materials does not occur. Density of compacted mixture shall be at least 100 percent of laboratory maximum dry density. Areas inaccessible to rollers shall be compacted to the required density with mechanical tampers.

Water, if required, shall be uniformly applied during the compaction operation in the amount necessary to obtain proper densification. If during production rolling, the material becomes unstable due to excess moisture, the material shall be aerated and allowed to dry to the point at which stability can be secured.

Rollers shall not be stopped and left sitting on uncompacted recycled asphalt/base mixture. Rolling shall be established so that starting and stopping will be on previously compacted recycled material or on the existing bituminous roadway, if at all possible.

Any type of rolling that results in cracking, movement, or other types of pavement distress shall be discontinued until such time as the problem can be resolved. Discontinuation and commencement of rolling operations shall be at the sole discretion of the project engineer.

3.6 FINISHING

The surface of the top layer shall be finished to grade and cross section shown. Finished surface shall be uniform texture. Light blading during rolling may be necessary for the finished surface to conform to the lines, grades, and cross sections. Should the surface for any reason become rough, corrugated, uneven in texture, or traffic-marked prior to completion, such unsatisfactory portion shall be scarified, reworked, relaid, or replaced as directed. Should any portion of the course, when laid, become watersoaked for any reason, that portion shall be removed immediately, and the mix placed in a windrow and aerated until a moisture content within the limits specified is obtained, and then spread, shaped, and rolled as specified.

3.6.1 Smoothness

The surface shall show no deviations in excess of 3/8 inch when tested with the 12-foot straightedge. Deviations exceeding this amount shall be corrected by removing material and replacing with new material, or by reworking existing material and compacting, as directed.

3.6.2 Thickness Control

Compacted thickness of the installed course shall be within 1/2 inch of the thickness indicated. Where measured thickness is more than 1/2 inch deficient, such areas shall be corrected by scarifying, adding new material of proper gradation, reblading, and recompacting as directed. Where the measured thickness is 1/2 inch thicker than indicated, the course shall be considered as conforming to the specified thickness requirements. Average job thickness shall be the average of all thickness measurements taken for the job, but shall be within 1/4 inch of the thickness indicated.

3.7 CONSTRUCTION JOINTS

At the end of each day's construction, a straight transverse construction joint shall be formed by cutting back into the completed work to form a true vertical face free of loose or shattered material. Material along construction joints not properly compacted shall be removed and replaced with soil-bitumen that is mixed, moistened, and compacted in accordance with this specification.

3.8 CURING

Allow the recycled asphalt/base course at least 7 days to cure before placement of a surface course.

3.9 SAMPLING AND TESTING

Sampling and testing shall be performed by an approved commercial testing laboratory or by facilities furnished by the Contractor and meeting the requirements outlined in ASTM D 3666. No work requiring testing will be permitted until the facilities have been inspected and approved. The first inspection shall be at the expense of the Government. Cost incurred for any subsequent inspection required because of failure of the facilities to pass the first inspection will be charged to the Contractor. **The frequency of sampling and testing** shall be performed according to CESPK PAM 415-1-2 Construction Control Manual and as stated herein. Certified copies of test results shall be furnished to the Contracting Officer.

3.9.1 Field Density

Field in-place density shall be determined in accordance with ASTM D 1556.

3.9.2 Gradations, Atterberg Limits, and Moisture Contents

Gradation analyses, moisture contents, and Atterberg limits shall performed in accordance with ASTM C 136, ASTM D 2216, and ASTM D 4318, respectively, on the material being stabilized. The location at which samples are taken may be selected by the Contractor as the most advantageous for control.

3.9.3 Extraction Test

Extraction tests shall be conducted in accordance with ASTM D 2172, to confirm the amount of bitumen and moisture in the mixture. One test shall be conducted for every 5 density tests. Sampling shall be taken in accordance with ASTM D 979.

3.9.4 Smoothness Test

Measurements for deviation from grade and cross section shown shall be taken in successive positions parallel to the area centerline, with a 12-foot straightedge. Measurements shall also be taken perpendicular to the area centerline at 50-foot intervals.

3.9.5 Thickness

Thickness of the stabilized course shall be measured at intervals in such a manner as to ensure one measurement for each 250 square yards square yards of stabilized course. Measurements shall be made by taking differential elevations between the presurfaced subgrade or subbase course and the top of the completed stabilized course at preselected locations.

3.10 MAINTENANCE

Stabilized area shall be maintained in a satisfactory condition until accepted by the Contracting Officer. Maintenance shall include immediate repairs to any defects and shall be repeated as often as necessary to keep the area intact. Defects shall be corrected as specified herein.

-- End of Section --

SECTION TABLE OF CONTENTS

DIVISION 02 - SITE WORK

SECTION 02964

COLD MILLING OF BITUMINOUS PAVEMENTS

PART 1 GENERAL

1.1 SCOPE OF WORK
1.2 REFERENCES
1.3 UNIT PRICES
1.3.1 Measurement
1.3.2 Payment
1.4 EQUIPMENT, TOOLS, AND MACHINES
1.4.1 Cold-Milling Machine
1.4.2 Cleaning Equipment
1.4.3 Straightedge
1.5 WEATHER LIMITATIONS
1.6 GRADE AND SURFACE-SMOOTHNESS REQUIREMENTS
1.6.1 Grade
1.6.2 Surface Smoothness

PART 2 PRODUCTS (Not Applicable)

PART 3 EXECUTION

3.1 PREPARATION OF SURFACE
3.2 MILLING OPERATION
3.3 GRADE AND SURFACE-SMOOTHNESS TESTING
3.3.1 Grade-Conformance Tests
3.3.2 Surface-Smoothness Tests
3.4 REMOVAL OF MILLED MATERIAL

-- End of Section Table of Contents --

SECTION 02964

COLD MILLING OF BITUMINOUS PAVEMENTS

PART 1 GENERAL

1.1 SCOPE OF WORK

This work shall consist of grinding asphalt concrete and roadway surfaces as shown on the plans and as specified in this specification.

1.2 REFERENCES

The publications listed below form a part of this specification to the extent referenced. The publications are referred to in the text by basic designation only.

STATE OF CALIFORNIA, DEPARTMENT OF TRANSPORTATION (CALTRANS), STANDARD SPECIFICATION (SS)

CALTRANS SS SECTION 42	(1999) Section 42, Groove and Grind Pavement

1.3 UNIT PRICES

1.3.1 Measurement

The quantity of milled pavement shall be the number of square yards of 1-inch deep and each addtion inch in depth of milled asphalt completed and accepted by the Contracting Officer. The number of square yards of milled pavement will be determined by measuring the length and width of the milled surface within the specified work area. Measurement to determine the area will be to the nearest inch for width and the nearest foot for length.

1.3.2 Payment

Payment will be to the nearest square yard for the base year Line Items 0001AH, "MILL ASPHALT 1"" and 0001AI, "EACH ADDED INCH" of the Pricing Schedule. No payment will be made for milling outside the specified area of work.

1.4 EQUIPMENT, TOOLS, AND MACHINES

Equipment, tools, and machines used in the performance of the work shall be maintained in a satisfactory working condition.

1.4.1 Cold-Milling Machine

The cold-milling machine shall be a self-propelled machine capable of milling the pavement to a specified depth and smoothness. Pavement milling machine shall be capable of establishing grade control; shall have means of controlling transverse slope; and shall have effective means of controlling dust produced during the pavement milling operation. The machine shall have the ability to remove the millings or cuttings from the pavement and

load them into a truck. The milling machine shall not cause damage to any part of the pavement structure that is not to be removed.

1.4.2 Cleaning Equipment

All cleaning equipment shall be suitable for removing and cleaning loose material from the pavement surface.

1.4.3 Straightedge

The Contractor shall furnish and maintain at the site, in good condition, one 12-foot straightedge or other suitable device for each milling machine, for testing the finished surface. Straightedge shall be made available for Government use. Straightedges shall be constructed of aluminum or other lightweight metal, and shall have blades of box or box-girder cross section with flat bottom reinforced to insure rigidity and accuracy. Straightedges shall have handles to facilitate movement on the pavement.

1.5 WEATHER LIMITATIONS

Milling shall not be performed when there is accumulation of snow or ice on the pavement surface.

1.6 GRADE AND SURFACE-SMOOTHNESS REQUIREMENTS

1.6.1 Grade

The finished milled surfaces shall conform to the lines, grades, and cross sections indicated. The finished milled-pavement surfaces shall vary not more than 0.06-foot from the established plan grade line and elevation. Finished surfaces at a juncture with other pavements shall coincide with the finished surfaces of the abutting pavements. The deviations from the plan grade line and elevation will not be permitted in areas of pavements where closer conformance with planned grade and elevation is required for the proper functioning of appurtenant structures involved.

1.6.2 Surface Smoothness

Finished surfaces shall not deviate from the testing edge of a 12 foot straightedge more than 1/4 inch in the transverse or longitudinal direction.

PART 2 PRODUCTS (Not Applicable)

PART 3 EXECUTION

3.1 PREPARATION OF SURFACE

The pavement surface shall be cleaned of excessive dirt, clay, or other foreign material immediately prior to milling the pavement.

3.2 MILLING OPERATION

Sufficient passes shall be made so that the designated area is milled to the grades and cross sections indicated. The milling shall proceed with care and in depth increments that will not damage the pavement below the designated finished grade. Any items, such as manholes, valve boxes, and utility lines, damaged or any pavement that is torn, cracked, gouged, broken, or undercut shall be repaired or replaced as directed.

3.3 GRADE AND SURFACE-SMOOTHNESS TESTING

3.3.1 Grade-Conformance Tests

The finished milled surface of the pavement will be tested for conformance with the plan-grade requirements and will be tested for acceptance by the Contracting Officer Representative at his discretion by running lines of levels longitudinally and transversely to determine the elevation of the completed pavement. The Contractor shall correct variations from the designated grade line and elevation in excess of the plan-grade requirements as directed. Skin patching for correcting low areas will not be permitted. The Contractor shall remove and replace the deficient low area. Sufficient material shall be removed to allow at least 1 inch of asphalt concrete to be placed.

3.3.2 Surface-Smoothness Tests

After completion of the final milling, the finished milled surface will be tested by the Government with a straightedge. Other approved devices may be used provided that, when satisfactorily and properly operated, such devices reveal all surface irregularities exceeding the tolerances herein before specified. Surface irregularities that depart from the testing edge by more than 1/4 inch shall be corrected.

3.4 REMOVAL OF MILLED MATERIAL

Material that is removed shall be disposed of as specified by the Contracting Officer's Representative.

-- End of Section --

SECTION TABLE OF CONTENTS

DIVISION 02 - SITE WORK

SECTION 02975

SEALING OF CRACKS IN BITUMINOUS PAVEMENTS

PART 1 GENERAL

1.1 REFERENCES
1.2 UNIT PRICES
1.2.1 Measurement
1.2.2 Payment
1.3 SYSTEM DESCRIPTION
1.4 SUBMITTALS
1.5 TEST REQUIREMENTS
1.6 EQUIPMENT
1.6.1 Crack Cleaning Equipment
1.6.1.1 Routing Equipment
1.6.1.2 Concrete Saw
1.6.1.3 Sandblasting Equipment
1.6.1.4 Waterblasting Equipment
1.6.1.5 Hand Tools
1.6.2 Crack Sealing Equipment
1.7 DELIVERY AND STORAGE
1.8 ENVIRONMENTAL CONDITIONS

PART 2 PRODUCTS

2.1 SEALANTS
2.2 BACKUP MATERIALS

PART 3 EXECUTION

3.1 PREPARATION OF CRACKS
3.1.1 Cracks
3.1.1.1 Hairline Cracks
3.1.1.2 Small Cracks
3.1.1.3 Medium Cracks
3.1.1.4 Large Cracks
3.1.2 Existing Sealant Removal
3.1.3 Routing
3.1.4 Sawing
3.1.5 Sandblasting
3.1.6 Backup Material
3.1.7 Rate of Progress of Crack Preparation
3.2 PREPARATION OF SEALANT
3.3 INSTALLATION OF SEALANT
3.3.1 Time of Application
3.3.2 Sealing the Crack
3.4 CRACK SEALANT INSTALLATION TEST SECTION
3.5 CLEANUP
3.6 QUALITY CONTROL PROVISIONS

3.6.1 Crack Cleaning
3.6.2 Crack Seal Application Equipment
3.6.3 Crack Sealant

-- End of Section Table of Contents --

SECTION 02975

SEALING OF CRACKS IN BITUMINOUS PAVEMENTS

PART 1 GENERAL

1.1 REFERENCES

The publications listed below form a part of this specification to the extent referenced. The publications are referred to in this text by the basic designation only.

AMERICAN SOCIETY FOR TESTING AND MATERIALS (ASTM)

ASTM C 509	(1994) Elastomeric Cellular Preformed Gasket and Sealing Material
ASTM D 789	(1994) Determination of Relative Viscosity, Melting Point, and Moisture Content of Polyamide (PA)
ASTM D 3405	(1994) Joint Sealants, Hot-Applied, for Concrete and Asphalt Pavements

1.2 UNIT PRICES

1.2.1 Measurement

The quantity of each sealing item to be paid for shall be determined by actual measurement of the number of linear feet of approved sealed crack.

1.2.2 Payment

Payment shall be made at the contract unit bid prices per linear foot for the sealing items scheduled for the base year Line Items under 0007, "REPAIR EXISTING ASPHALT ASPHALT PAVEMENT CRACKS" of the Pricing Schedule. The unit bid prices shall include the cost of all labor, materials, and the use of all equipment and tools required to complete the work.

1.3 SYSTEM DESCRIPTION

Machines, tools, and equipment used in the performance of the work required by this section shall be approved before the work is started and shall be maintained in satisfactory condition at all times.

1.4 SUBMITTALS

Government approval is required for submittals with a "GA" designation; submittals having an "FIO" designation are for information only. The following shall be submitted in accordance with Section 01330 SUBMITTAL PROCEDURES:

SD-06 Instructions

Installation of Sealant; FIO.

Manufacturer's instructions 30 days prior to the use of the material on the project. Installation of the material will not be allowed until the instructions are received.

SD-09 Reports

Test Requirements; GA.

Reports of all tests. Testing of the materials shall be performed in an approval independent laboratory and certified copies of the test reports shall be submitted and approved 30 days prior to the use of the materials at the job site. Samples will be retained by the Government for possible future testing should the materials appear defective during or after application.

SD-14 Samples

Materials; GA.

Samples of the materials 60 days prior to their use on the project. No material will be allowed to be used until it has been approved.

1.5 TEST REQUIREMENTS

Samples of materials shall be furnished, in sufficient quantity to be tested, upon request. Conformance with the requirements of the laboratory tests specified will not constitute final acceptance of the materials. Final acceptance will be based on the performance of the in-place materials.

1.6 EQUIPMENT

Machines, tools, and equipment used in the performance of the work required by this section shall be approved before the work is started and shall be maintained in satisfactory condition at all times.

1.6.1 Crack Cleaning Equipment

1.6.1.1 Routing Equipment

The routing equipment shall be a self-powered machine operating a power driven tool or bit specifically designed for routing bituminous pavements. The bit shall rotate about a vertical axis at sufficient speed to cut a smooth vertical-walled reservoir in the pavement surface and shall maintain accurate cutting without damaging the sides or top edges of the reservoir. The router shall be capable of following the trace of the crack without deviation. The use of rotary impact routing devices may be permitted if vertical-sided carbide tipped bits are used.

1.6.1.2 Concrete Saw

A self-propelled power saw with small diameter of 6 inches or less, with water-cooled diamond or abrasive saw blades shall be provided for cutting cracks to the depths and widths specified and for removing filler that is embedded in the cracks or adhered to the crack faces. The diameter of the saw blade shall be small enough to allow the saw to closely follow the trace of the crack.

1.6.1.3 Sandblasting Equipment

Sandblasting equipment shall include an air compressor, hose, and long-wearing venturi-type nozzle of proper size, shape and opening. The maximum nozzle opening shall not exceed 1/4 inch. The air compressor shall be portable; and shall be capable of furnishing not less than 150 cfm and maintaining a line pressure of not less than 90 psi at the nozzle while in use. Compressor capability under job conditions shall be demonstrated before approval. The compressor shall be equipped with traps that will maintain the compressed air free of oil and water. The nozzle shall have an adjustable guide that will hold the nozzle aligned with the crack about 1 inch above the pavement surface. The height, angle of inclination and the size of the nozzle shall be adjusted as necessary to secure satisfactory results.

1.6.1.4 Waterblasting Equipment

Waterblasting equipment shall include a trailer-mounted water tank, pumps, high-pressure hose, wand with safety release cutoff control, nozzle, and auxiliary water resupply equipment. The water tank and auxiliary resupply equipment shall be of sufficient capacity to permit continuous operations. The hose, wand, and nozzle shall be capable of cleaning the crack faces and the pavement surface on both sides of the crack for a width of at least 1/2 inch. A pressure gauge mounted at the pump shall show at all times the pressure in pounds per square inch (psi) at which the equipment is operating.

1.6.1.5 Hand Tools

Hand tools may be used, when approved, for removing defective sealant from cracks and repairing or cleaning the crack faces. Long handled rubber squeegees shall be used to level and smooth the sealant at the top of the pavement surface.

1.6.2 Crack Sealing Equipment

The unit applicators used for heating and installing the hot-poured crack sealant materials shall be mobile and shall be equipped with a double-boiler, agitator-type kettle with an oil medium in the outer space for heat transfer; a direct-connected pressure-type extruding device with a nozzle shaped for inserting in the crack to be filled; positive temperature devices for controlling the temperature of the transfer oil and sealant; and a recording type thermometer for indicating the temperature of the sealant. The applicator unit design shall allow the sealant to circulate through the delivery hose and return to the inner kettle when not in use. Specifically, the crack sealing equipment shall have the following:

1. A double boiler that transfers oil between outer and inner shells.

2. A propane fueled heat source.

3. Be trailer mounted and capable of being towed by a light truck.

4. A flexible wand with a rigid end piece equipped with a quick shut-off valve.

5. The kettle shall have an auger near the bottom to keep the sealant agitated.

6. Hydraulically operated controls, pump, and agitator.

1.7 DELIVERY AND STORAGE

Materials delivered to the job site shall be inspected for defects, unloaded, and stored with a minimum of handling to avoid damage. Storage facilities shall be provided at the job site to protect materials from weather and to maintain them at the temperatures recommended by the manufacturer.

1.8 ENVIRONMENTAL CONDITIONS

The ambient air temperature and the pavement temperature within the joint wall shall be a minimum of 50 degrees F and rising at the time of application of the materials. Sealant shall not be applied if moisture is observed in the crack.

PART 2 PRODUCTS

2.1 SEALANTS

Crack sealant material shall be rubberized asphalt. Sealant material shall have been manufactured by a company that has manufactured sealant materials for over two years. The Manufacturer shall certify that the rubberized asphalt product is specifically manufactured to be used as a bituminous pavement crack sealant. Specific requirements and instructions necessary for proper use of the product shall be included as part of the submittal. Sealants shall conform to ASTM D 3405. Sealants shall have a low elastic modulus and specified for use in hot and dry desert environments.

2.2 BACKUP MATERIALS

Backup material shall be a compressible, nonshrinking, nonstaining, nonabsorptive material and shall be nonreactive with the crack sealant. The melting point of the backing material shall be at least 5 degrees F greater than the maximum pouring temperature of the sealant being used, when tested in accordance with ASTM D 789. The material shall have a water absorption of not more than 5 percent by weight when tested in accordance with ASTM C 509. The backup material shall be 25 percent (plus or minus 5 percent) larger in diameter than the nominal width of the crack.

PART 3 EXECUTION

3.1 PREPARATION OF CRACKS

Immediately before the installation of the crack sealant, the cracks shall be thoroughly cleaned to remove oxidized pavement, loose aggregate and foreign debris. The preparation shall be as follows:

3.1.1 Cracks

3.1.1.1 Hairline Cracks

Cracks that are less than 1/8 inch do not need to be sealed.

3.1.1.2 Small Cracks

Cracks that are 1/8 to 1/2 inch wide shall be routed, thoroughly cleaned, and sealed.

3.1.1.3 Medium Cracks

Cracks that are 1/2 to 1 inch wide shall be routed and thoroughly cleaned, then backup material shall be placed and the crack sealed.

3.1.1.4 Large Cracks

Cracks that are greater than 1 inch wide shall be repaired using the techniques of Section 02788 PATCHING AND REPAIRING BITUMINOUS PAVEMENTS.

3.1.2 Existing Sealant Removal

All in-place sealant shall be cut loose from both crack faces and to a depth shown on the drawings, using a concrete saw or hand tools as specified in paragraph EQUIPMENT. Asphalt concrete that has been contaminated by and softened due to exposure to previously applied and uncured sealant shall be routed and removed. If the removal width exceeds 3/4 inch from the crack face, the crack shall be repaired using the techniques of Section 02788 PATCHING AND REPAIRING BITUMINOUS PAVEMENTS. Depth shall be sufficient to accommodate any backup material required to maintain the depth of new sealant to be installed. Prior to further cleaning operations, all old loose sealant remaining in the crack opening shall be removed by blowing with compressed air.

3.1.3 Routing

Routing of the cracks shall be accomplished using a rotary router with a bit that is at least 1/8 inch wider than the nominal width of the crack and to a depth not less than 3/4 inch but in no case deeper that the thickness of the existing asphalt concrete pavement. Routing shall remove all residual old sealant (resealing), oxidized pavement, vegetation, as well as any loose aggregate in the crack wall.

3.1.4 Sawing

Sawing of the cracks shall be accomplished using a power-driving concrete saw as specified in paragraph EQUIPMENT. The blade shall be stiffened as necessary with suitable dummy (or used) blades or washers. Immediately following the sawing operation, the crack opening shall be cleaned using a water jet to remove all saw cuttings and debris.

3.1.5 Sandblasting

The crack faces and the pavement surfaces extending a minimum of 1/2 inch from the crack edges shall be sandblasted clean. A multiple-pass technique shall be used until the surfaces are free of dust, dirt, old sealant residue, or foreign debris that might prevent the sealant material from bonding to the asphalt pavement. After final cleaning and immediately prior to sealing, the cracks shall be blown out with compressed air and left completely free of debris and water. The Contractor shall ensure that sandblasting does not damage the pavement.

3.1.6 Backup Material

Backup material shall be used on all cracks that have a width of 1/2 inch or greater. The backup material shall be used to seal the lower portion of

the crack to prevent the entrance of sealant below the specified depth. Backup material shall be inserted into the lower portion of the crack as shown on the drawings. The Contractor shall ensure that the backup material is placed at the specified depth and is not stretched or twisted during installation.

3.1.7 Rate of Progress of Crack Preparation

The stages of crack preparation which include routing, sandblasting of the crack faces, air pressure cleaning and placing of the backup material shall be limited to only that quantity that can be sealed during the same day.

3.2 PREPARATION OF SEALANT

Hot-poured sealants shall not be heated in excess of the safe heating temperature recommended by the manufacturer as shown on the sealant containers. Sealant that has been overheated or subjected to application temperatures for over 4 hours or that has remained in the applicator at the end of the day's operation shall be withdrawn and wasted.

3.3 INSTALLATION OF SEALANT

3.3.1 Time of Application

Cracks shall be sealed immediately following final cleaning of the crack walls and following the placement of the backup material (when required). Cracks that cannot be sealed under the conditions specified, or when rain interrupts sealing operations, shall be recleaned and allowed to dry prior to installing the sealant.

3.3.2 Sealing the Crack

Immediately preceding, but not more than 50 feet ahead of the crack sealing operations, a final cleaning with compressed air shall be performed. Rubberized asphalt sealant shall be extruded from the wand at low pressures. The cracks shall be filled from the bottom up to the pavement surface and leveled with a rubber squeegee. Excess or spilled sealant shall be removed from the pavement by approved methods and shall be discarded. The sealant shall be installed in a manner which prevents the formation of voids and entrapped air. Several passes with the applicator wand may be necessary to obtain the specified sealant depth from the pavement surface. Gravity methods or pouring pots shall not be used to install the sealant material. Traffic shall not be permitted over newly sealed pavement until authorized by the Contracting Officer. Cracks shall be checked frequently to ensure that the newly installed sealant is cured to a tack-free condition within 3 hours.

3.4 CRACK SEALANT INSTALLATION TEST SECTION

Prior to the cleaning and sealing of the cracks for the entire project, a test section at least 200 feet long shall be prepared using the specified materials and approved equipment, to demonstrate the proposed sealing of all cracks of the project. Following the completion of the test section and before any other crack is sealed, the test section will be inspected to determine that the materials and installation meet the requirements specified. If materials or installation do not meet requirements, the materials shall be removed and the cracks recleaned and resealed at no cost to the Government. When the test section meets the requirements, it may be incorporated into the permanent work and paid for at the contract unit

price per linear foot for sealing items scheduled. All other cracks shall be sealed in the manner approved for sealing the test section.

3.5 CLEANUP

Upon completion of the project, unused materials shall be removed from the site and the pavement shall be left in a clean condition.

3.6 QUALITY CONTROL PROVISIONS

3.6.1 Crack Cleaning

Quality control provisions shall be provided during the crack cleaning process to correct improper equipment and cleaning techniques that damage the bituminous pavement in any manner. Cleaned cracks shall be approved prior to installation of the crack sealant.

3.6.2 Crack Seal Application Equipment

The application equipment shall be inspected to ensure conformance to temperature requirements and proper installation. Evidences of bubbling, improper installing, and failing to cure or set shall be cause to suspend operations until causes of the deficiencies are determined and corrected.

3.6.3 Crack Sealant

The crack sealant shall be inspected for proper cure and set rating, bonding to the bituminous pavement, cohesive separation within the sealant, reversion to liquid, and entrapped air and voids. Sealants exhibiting any of these deficiencies at any time prior to the final acceptance of the project shall be removed from the crack, wasted, and replaced as specified herein at no additional cost to the Government.

-- End of Section --

SECTION TABLE OF CONTENTS

DIVISION 02 - SITE WORK

SECTION 02981

GROOVING FOR AIRFIELD PAVEMENTS

PART 1 GENERAL

1.1 SUBMITTALS
1.2 MEASUREMENT
1.2.1 Measurement
1.2.2 Payment
1.3 GROOVING MACHINE
1.4 WATER SUPPLY
1.5 ENVIRONMENTAL REQUIREMENTS

PART 2 PRODUCTS (Not Applicable)

PART 3 EXECUTION

3.1 PREPARATION
3.1.1 Existing Pavements
3.1.2 New Pavements
3.2 GROOVING
3.2.1 Procedures
3.2.2 Clean-Up
3.2.3 Repair of Damaged Pavement

-- End of Section Table of Contents --

SECTION 02981

GROOVING FOR AIRFIELD PAVEMENTS

PART 1 GENERAL

1.1 SUBMITTALS

Government approval is required for submittals with a "GA" designation; submittals having an "FIO" designation are for information only. The following shall be submitted in accordance with Section 01330 SUBMITTAL PROCEDURES:

SD-01Data

Equipment; GA.

List of proposed equipment to be used in performance of construction work, including descriptive data.

1.2 MEASUREMENT

1.2.1 Measurement

Pavement grooving on existing pavements will be measured by the square yard. The quantity of pavement grooving to be paid will be determined by multiplying the width of the grooved area by the horizontal length grooved.

1.2.2 Payment

There is no line item for this work in the Pricing Schedule; payment for grooving shall be considered as part of the line item unit price for airfield concrete slab replacement unless negotiated otherwise. The negotiated contract price paid per square yard for the work shall include full compensation for furnishing all labor, materials, tools, equipment, and incidentals involved in grooving the existing concrete pavement, including removing and disposing of residue, as specified in these specifications and as directed by the Contracting Officer.

1.3 GROOVING MACHINE

The grooving machine shall be a type equipped with diamond-saw cutting blades, and capable of making at least 18 inches in width of multiple parallel grooves in one pass of the machine. Thickness of the cutting blades shall be capable of making the required width and depth of grooves in one pass of the machine. The cutting head shall not contain a mixture of new and worn blades or blades of unequal wear or diameter. The wheels on the grooving machine shall be of a design that will not scar or spall the pavement. The machine shall be provided with devices to control depth of groove and alignment within the specified tolerances.

1.4 WATER SUPPLY

Water for the grooving operation shall be provided by the Contractor and shall be transported from the source shown on the drawings to the job.

1.5 ENVIRONMENTAL REQUIREMENTS

Grooving operations will not be permitted when freezing conditions prevent the immediate removal of debris and/or drainage of water from the grooved area.

PART 2 PRODUCTS (Not Applicable)

PART 3 EXECUTION

3.1 PREPARATION

3.1.1 Existing Pavements

Bumps, depressed areas, bad or faulted joints, and badly cracked and/or spalled areas in the pavement shall not be grooved until such areas are adequately repaired or replaced.

3.1.2 New Pavements

New asphalt concrete pavements shall be allowed to cure for a minimum of 30 days before grooving, to allow the material to become stable enough to prevent closing of the grooves under normal use. New portland cement concrete pavements shall be allowed to cure for a minimum of 28 days before grooving.

3.2 GROOVING

3.2.1 Procedures

Grooves shall be cut in the asphalt or portland cement areas as indicated on the drawings. The grooving shall begin at one side of the usable runway or taxiway and continue for the full width of the area. All reasonable precautions shall be taken to prevent damage to or roughening of the pavement between grooves. Spalling along or tearing or raveling of the groove edges shall not be allowed. The grooves shall be 1/4 inch plus or minus 1/16 inch wide by 1/4 inch plus or minus 1/16 inch deep and 1-1/2 inches plus or minus 1/8 inch center to center spacing. The groove length shall be [_____] feet plus or minus 3 inches long and normal to the longitudinal axis of the centerline of the runway or taxiway. The transverse alignment of the grooves shall not vary more than 3 inches plus or minus on a 75 foot length of grooving.

3.2.2 Clean-Up

Clean-up shall be continuous. Debris produced by the machine must be flushed to the edge of the grooved area or shall be picked up as it forms. The dust coating remaining shall be flushed to the edge of the area if the resultant accumulation is not detrimental to the vegetation or storm drainage system. All flushing operations shall be accomplished in a manner to prevent erosion on the shoulders.

3.2.3 Repair of Damaged Pavement

Any damage that occurs to the pavement as a result of the grooving operations, which in the opinion of the Contracting Officer will be detrimental to aircraft tires, shall be repaired at the Contractor's expense.

SECTION TABLE OF CONTENTS

DIVISION 03 - CONCRETE

SECTION 03100

STRUCTURAL CONCRETE FORMWORK

PART 1 GENERAL

1.1 REFERENCES
1.2 MEASUREMENT AND PAYMENT
1.3 SUBMITTALS
1.4 DESIGN
1.5 STORAGE AND HANDLING

PART 2 PRODUCTS

2.1 FORM MATERIALS
2.1.1 Forms For Class A and Class B Finish
2.1.2 Forms For Class C Finish
2.1.3 Forms For Class D Finish
2.1.4 Pan-Form Units
2.1.5 Form Ties
2.1.6 Form Releasing Agents
2.1.7 Fiber Voids
2.2 FIBER VOID RETAINERS
2.2.1 Polystyrene Rigid Insulation
2.2.2 Precast Concrete

PART 3 EXECUTION

3.1 INSTALLATION
3.1.1 Formwork
3.1.2 Fiber Voids
3.2 CHAMFERING
3.3 COATING
3.4 REMOVAL OF FORMS

-- End of Section Table of Contents --

SECTION 03100

STRUCTURAL CONCRETE FORMWORK

PART 1 GENERAL

1.1 REFERENCES

The publications listed below form a part of this specification to the extent referenced. The publications are referred to in the text by basic designation only.

ACI INTERNATIONAL (ACI)

ACI 347R	(1994) Guide to Formwork for Concrete

AMERICAN HARDBOARD ASSOCIATION (AHA)

AHA ANSI/AHA A135.4	(1995) Basic Hardboard

AMERICAN SOCIETY FOR TESTING AND MATERIALS (ASTM)

ASTM C 578	(1995) Rigid, Cellular Polystyrene Thermal Insulation

DEPARTMENT OF COMMERCE (DOC)

DOC PS 1	(1996) Voluntary Product Standard - Construction and Industrial Plywood

1.2 MEASUREMENT AND PAYMENT

Formwork shall be considered as an incidental item, part of the contract concrete work; no additional compensation shall be forthcoming for concrete formwork.

1.3 SUBMITTALS

Government approval is required for submittals with a "GA" designation; submittals having an "FIO" designation are for information only. The following shall be submitted in accordance with Section 01330 SUBMITTAL PROCEDURES:

SD-01 Data

Design; GA.

Design analysis and calculations for form design and methodology used in the design.

Form Materials; GA.

Manufacturer's data including literature describing form materials, accessories, and form releasing agents.

SD-04 Drawings

Concrete Formwork; GA.

Drawings showing details of formwork, including dimensions of fiber voids, joints, supports, studding and shoring, and sequence of form and shoring removal.

SD-06 Instructions

Form Releasing Agents; FIO.

Manufacturer's recommendation on method and rate of application of form releasing agents.

SD-13 Certificates

Fiber Voids; FIO.

Certificates attesting that fiber voids conform to the specified requirements.

SD-14 Samples

Fiber Voids; FIO.

One sample unit of fiber voids prior to installation of the voids.

1.4 DESIGN

Formwork shall be designed in accordance with methodology of ACI 347R for anticipated loads, lateral pressures, and stresses. Forms shall be capable of producing a surface which meets the requirements of the class of finish specified in Section 03300 CAST-IN-PLACE STRUCTURAL CONCRETE. Forms shall be capable of withstanding the pressures resulting from placement and vibration of concrete.

1.5 STORAGE AND HANDLING

Fiber voids shall be stored above ground level in a dry location. Fiber voids shall be kept dry until installed and overlaid with concrete.

PART 2 PRODUCTS

2.1 FORM MATERIALS

2.1.1 Forms For Class A and Class B Finish

Forms for Class A and Class B finished surfaces shall be plywood panels conforming to DOC PS 1, Grade B-B concrete form panels, Class I or II. Other form materials or liners may be used provided the smoothness and appearance of concrete produced will be equivalent to that produced by the plywood concrete form panels. Forms for round columns shall be the prefabricated seamless type.

2.1.2 Forms For Class C Finish

Forms for Class C finished surfaces shall be shiplap lumber; plywood conforming to DOC PS 1, Grade B-B concrete form panels, Class I or II; tempered concrete form hardboard conforming to AHA ANSI/AHA A135.4; other approved concrete form material; or steel, except that steel lining on wood sheathing shall not be used. Forms for round columns may have one vertical seam.

2.1.3 Forms For Class D Finish

Forms for Class D finished surfaces, except where concrete is placed against earth, shall be wood or steel or other approved concrete form material.

2.1.4 Pan-Form Units

Pan-form units for one-way or two-way concrete joist and slab construction shall be factory-fabricated units of the approximate section indicated. Units shall consist of steel or molded fiberglass concrete form pans. Closure units shall be furnished as required.

2.1.5 Form Ties

Form ties shall be factory-fabricated metal ties, shall be of the removable or internal disconnecting or snap-off type, and shall be of a design that will not permit form deflection and will not spall concrete upon removal. Solid backing shall be provided for each tie. Except where removable tie rods are used, ties shall not leave holes in the concrete surface less than 1/4 inch nor more than 1 inch deep and not more than 1 inchin diameter. Removable tie rods shall be not more than 1-1/2 inches in diameter.

2.1.6 Form Releasing Agents

Form releasing agents shall be commercial formulations that will not bond with, stain or adversely affect concrete surfaces. Agents shall not impair subsequent treatment of concrete surfaces depending upon bond or adhesion nor impede the wetting of surfaces to be cured with water or curing compounds.

2.1.7 Fiber Voids

Fiber voids shall be the product of a reputable manufacturer regularly engaged in the commercial production of fiber voids. The voids shall be constructed of double faced, corrugated fiberboard. The corrugated fiberboard shall be fabricated of wet strength paper liners, impregnated with paraffin, and laminated with moisture resistant adhesive, and shall have a board strength of 275 psi. Voids which are impregnated with paraffin after construction, in lieu of being constructed with paraffin impregnated fiberboard, are acceptable. Voids shall be designed to support not less than 1000 psf. To prevent separation during concrete placement fiber voids shall be assembled with steel or plastic banding at 4 feet on center maximum, or by adequate stapling or gluing as recommended by the manufacturer. Fiber voids placed under concrete slabs and that are 8 inches in depth may be heavy duty "waffle box" type, constructed of paraffin impregnated corrugated fiberboard.

2.2 FIBER VOID RETAINERS

2.2.1 Polystyrene Rigid Insulation

Polystyrene rigid insulation shall conform to ASTM C 578, Type V, VI, or VII, square edged. Size shall be 1-1/2 inches thick by 16 inches in height by 3 feet in length, unless otherwise indicated.

2.2.2 Precast Concrete

Precast concrete units shall have a compressive strength of not less than 2500 psi, reinforced with 6 inch by 6 inch by W1.4 WWF wire mesh, and 12 inches (height) by 3 feet (length) by 1-5/8 inches (thickness) in size unless indicated.

PART 3 EXECUTION

3.1 INSTALLATION

3.1.1 Formwork

Forms shall be mortar tight, properly aligned and adequately supported to produce concrete surfaces meeting the surface requirements specified in Section 03300 CAST-IN-PLACE STRUCTURAL CONCRETE and conforming to construction tolerance given in TABLE 1. Where concrete surfaces are to have a Class A or Class B finish, joints in form panels shall be arranged as approved. Where forms for continuous surfaces are placed in successive units, the forms shall fit over the completed surface to obtain accurate alignment of the surface and to prevent leakage of mortar. Forms shall not be reused if there is any evidence of surface wear and tear or defects which would impair the quality of the surface. Surfaces of forms to be reused shall be cleaned of mortar from previous concreting and of all other foreign material before reuse. Form ties that are to be completely withdrawn shall be coated with a nonstaining bond breaker.

3.1.2 Fiber Voids

Voids shall be placed on a smooth firm dry bed of suitable material, to avoid being displaced vertically, and shall be set tight, with no buckled cartons, in order that horizontal displacement cannot take place. Each section of void shall have its ends sealed by dipping in paraffin, with any additional cutting of voids at the jobsite to be field dipped in the same type of sealer, unless liners and flutes are completely impregnated with paraffin. Prior to placing reinforcement, the entire formed area for slabs shall be covered with a 4 x 8 feet minimum flat sheets of fiber void corrugated fiberboard. Joints shall be sealed with a moisture resistant tape having a minimum width of 3 inches. If voids are destroyed or damaged and are not capable of supporting the design load, they shall be replaced prior to placing of concrete.

3.2 CHAMFERING

Except as otherwise shown, external corners that will be exposed shall be chamfered, beveled, or rounded by moldings placed in the forms.

3.3 COATING

Forms for Class A and Class B finished surfaces shall be coated with a form releasing agent before the form or reinforcement is placed in final position. The coating shall be used as recommended in the manufacturer's printed or written instructions. Forms for Class C and D finished surfaces

may be wet with water in lieu of coating immediately before placing concrete, except that in cold weather with probable freezing temperatures, coating shall be mandatory. Surplus coating on form surfaces and coating on reinforcing steel and construction joints shall be removed before placing concrete.

3.4 REMOVAL OF FORMS

Forms shall be removed preventing injury to the concrete and ensuring the complete safety of the structure. Formwork for columns, walls, side of beams and other parts not supporting the weight of concrete may be removed when the concrete has attained sufficient strength to resist damage from the removal operation but not before at least 24 hours has elapsed since concrete placement. Supporting forms and shores shall not be removed from beams, floors and walls until the structural units are strong enough to carry their own weight and any other construction or natural loads. Supporting forms or shores shall not be removed before the concrete strength has reached 70 percent of design strength, as determined by field cured cylinders or other approved methods. This strength shall be demonstrated by job-cured test specimens, and by a structural analysis considering the proposed loads in relation to these test strengths and the strength of forming and shoring system. The job-cured test specimens for form removal purposes shall be provided in numbers as directed and shall be in addition to those required for concrete quality control. The specimens shall be removed from molds at the age of 24 hours and shall receive, insofar as possible, the same curing and protection as the structures they represent.

TABLE 1

TOLERANCES FOR FORMED SURFACES

1. Variations from the plumb:	In any 10 feet of length ---------- 1/4 inch
a. In the lines and surfaces of columns, piers, walls and in arises	Maximum for entire length ---------- 1 inch
b. For exposed corner columns,control-joint grooves, and other conspicuous lines	In any 20 feet of length ---------- ---- 1/4 inch Maximum for entire length---------- 1/2 inch
2. Variation from the level or from the grades indicated on the drawings:	In any 10 feet of length ----------1/4 inch In any bay or in any 20 feet of length---------- 3/8 inch
a. In slab soffits, ceilings, beam soffits, and in arises, measured before removal of supporting shores	Maximum for entire length ---------- 3/4 inch
b. In exposed lintels, sills, parapets,	In any bay or in any 20 feet of length ---------- ----- 1/4 inch

TABLE 1

TOLERANCES FOR FORMED SURFACES

	horizontal grooves, and other conspicuous lines	Maximum for entire length---------- 1/2 inch
3.	Variation of the linear building lines from established position in plan	In any 20 feet --------- 1/2 inch Maximum ----------1 inch
4.	Variation of distance between walls, columns, partitions	1/4 inch per 10 feet of distance, but not more than 1/2 inch in any one bay,and not more than 1 inch total variation
5.	Variation in the sizes and locations of sleeves, floor openings, and wall opening	Minus ---------- 1/4 inch Plus ---------- 1/2 inch
6.	Variation in cross-sectional dimensions of columns and beams and in the thickness of slabs and walls	Minus ---------- 1/4 inch Plus ---------- 1/2 inch
7.	Footings:	
	a. Variation of dimensions in plan	Minus ---------- 1/2 inch Plus ---------- 2 inches when formed or plus 3 inches when placed against unformed excavation
	b. Misplacement of eccentricity	2 percent of the footing width in the direction of misplacement but not more than 2 inches
	c. Reduction in thickness of specified thickness	Minus ---------- 5 percent
8.	Variation in steps:	Riser ---------- 1/8 inch
	a. In a flight of stairs	Tread ---------- 1/4 inch
	b. In consecutive steps	Riser ---------- 1/16 inch Tread ---------- 1/8 inch

-- End of Section --

SECTION TABLE OF CONTENTS

DIVISION 03 - CONCRETE

SECTION 03200

CONCRETE REINFORCEMENT

PART 1 GENERAL

1.1 REFERENCES
1.2 MEASUREMENT AND PAYMENT
1.3 SUBMITTALS
1.4 WELDING
1.5 DELIVERY AND STORAGE

PART 2 PRODUCTS

2.1 DOWELS
2.2 FABRICATED BAR MATS
2.3 REINFORCING STEEL
2.4 WIRE TIES
2.5 SUPPORTS
2.6 SYNTHETIC FIBER REINFORCEMENT

PART 3 EXECUTION

3.1 REINFORCEMENT
3.1.1 Placement
3.1.2 Splicing
3.2 DOWEL INSTALLATION
3.3 SPECIAL INSPECTION AND TESTING FOR SEISMIC-RESISTING SYSTEMS

-- End of Section Table of Contents --

SECTION 03200

CONCRETE REINFORCEMENT

PART 1 GENERAL

1.1 REFERENCES

The publications listed below form a part of this specification to the extent referenced. The publications are referred to in the text by basic designation only.

ACI INTERNATIONAL (ACI)

ACI 318/318R	(1995) Building Code Requirements for Structural Concrete and Commentary

AMERICAN SOCIETY FOR TESTING AND MATERIALS (ASTM)

ASTM A 53	(1999) Pipe, Steel, Black and Hot-Dipped, Zinc-Coated, Welded and Seamless
ASTM A 82	(1997a) Steel Wire, Plain, for Concrete Reinforcement
ASTM A 184/A 184M	(1996) Fabricated Deformed Steel Bar Mats for Concrete Reinforcement
ASTM A 615/A 615M	(1996a) Deformed and Plain Billet-Steel Bars for Concrete Reinforcement
ASTM A 675/A 675M	(1990a; R 1995e1) Steel Bars, Carbon, Hot-Wrought, Special Quality, Mechanical Properties
ASTM A 706/A 706M	(1998) Low-Alloy Steel Deformed and Plain Bars for Concrete Reinforcement
ASTM A 767/A 767M	(1997) Zinc-Coated (Galvanized) Steel Bars in Concrete Reinforcement
ASTM A 775/A 775M	(1997e1) Epoxy-Coated Reinforcement Steel Bars

AMERICAN WELDING SOCIETY (AWS)

AWS D1.4	(1998) Structural Welding Code - Reinforcing Steel

CONCRETE REINFORCING STEEL INSTITUTE (CRSI)

CRSI MSP-1	(1996) Manual of Standard Practice

1.2 MEASUREMENT AND PAYMENT

Concrete reinforcement shall be considered as an incidental item for concrete construction; no additional compensation shall be forthcoming for concrete reinforcement.

1.3 SUBMITTALS

Government approval is required for submittals with a "GA" designation; submittals having an "FIO" designation are for information only. The following shall be submitted in accordance with Section 01330 SUBMITTAL PROCEDURES:

SD-04 Drawings

Concrete Reinforcement System; GA.

Detail drawings showing reinforcing steel placement, schedules, sizes, grades, and splicing and bending details. Drawings shall show support details including types, sizes and spacing. Contractor shall submit mechanical splices for approval.

SD-08 Statements

Welding; FIO.

A list of qualified welders names.

SD-13 Certificates

Reinforcing Steel; FIO.

Certified copies of mill reports attesting that the reinforcing steel furnished contains no less than 25 percent recycled scrap steel and meets the requirements specified herein, prior to the installation of reinforcing steel.

1.4 WELDING

Welders shall be qualified in accordance with AWS D1.4. Qualification test shall be performed at the worksite and the Contractor shall notify the Contracting Officer 24 hours prior to conducting tests. Special welding procedures and welders qualified by others may be accepted as permitted by AWS D1.4, and the contracting officer.

1.5 DELIVERY AND STORAGE

Reinforcement and accessories shall be stored off the ground on platforms, skids, or other supports.

PART 2 PRODUCTS

2.1 DOWELS

Dowels shall conform to ASTM A 615/A 615M, Grade 60 or 75.

2.2 FABRICATED BAR MATS

Fabricated bar mats shall conform to ASTM A 184/A 184M.

2.3 REINFORCING STEEL

Reinforcing steel shall be deformed bars conforming to ASTM A 615/A 615M or ASTM A 706/A 706M, grades and sizes as indicated. In highly corrosive environments or when directed by the Contracting Officer, reinforcing steel shall conform to ASTM A 767/A 767M or ASTM A 775/A 775M as appropriate.

2.4 WIRE TIES

Wire ties shall be 16 gauge or heavier black annealed steel wire.

2.5 SUPPORTS

Bar supports for formed surfaces shall be designed and fabricated in accordance with CRSI MSP-1 and shall be steel or precast concrete blocks. Precast concrete blocks shall have wire ties and shall be not less than 4 inches square when supporting reinforcement on ground. Precast concrete block shall have compressive strength equal to that of the surrounding concrete. Where concrete formed surfaces will be exposed to weather or where surfaces are to be painted, steel supports within 1/2 inch of concrete surface shall be galvanized, plastic protected or of stainless steel. Concrete supports used in concrete exposed to view shall have the same color and texture as the finish surface. For slabs on grade, supports shall be precast concrete blocks, plastic coated steel fabricated with bearing plates, or specifically designed wire-fabric supports fabricated of plastic.

2.6 SYNTHETIC FIBER REINFORCEMENT

Synthetic fiber shall be polypropylene with a denier less than 100 and a nominal fiber length of 2 inches.

PART 3 EXECUTION

3.1 REINFORCEMENT

Reinforcement shall be fabricated to shapes and dimensions shown and shall conform to the requirements of ACI 318/318R. Reinforcement shall be cold bent unless otherwise authorized. Bending may be accomplished in the field or at the mill. Bars shall not be bent after embedment in concrete. Safety caps shall be placed on all exposed ends of vertical concrete reinforcement bars that pose a danger to life safety. Wire tie ends shall face away from the forms.

3.1.1 Placement

Reinforcement shall be free from loose rust and scale, dirt, oil, or other deleterious coating that could reduce bond with the concrete. Reinforcement shall be placed in accordance with ACI 318/318R at locations shown plus or minus one bar diameter. Reinforcement shall not be continuous through expansion joints and shall be as indicated through construction or contraction joints. Concrete coverage shall be as indicated or as required by ACI 318/318R. If bars are moved more than one bar diameter to avoid interference with other reinforcement, conduits or embedded items, the resulting arrangement of bars, including additional bars required to meet structural requirements, shall be approved before concrete is placed.

3.1.2 Splicing

Splices of reinforcement shall conform to ACI 318/318R and shall be made only as required or indicated. Splicing shall be by lapping or by mechanical or welded butt connection; except that lap splices shall not be used for bars larger than No. 11 unless otherwise indicated. Welding shall conform to AWS D1.4. Welded butt splices shall be full penetration butt welds. Lapped bars shall be placed in contact and securely tied or spaced transversely apart to permit the embedment of the entire surface of each bar in concrete. Lapped bars shall not be spaced farther apart than one-fifth the required length of lap or 6 inches. Mechanical butt splices shall be in accordance with the recommendation of the manufacturer of the mechanical splicing device. Butt splices shall develop 125 percent of the specified minimum yield tensile strength of the spliced bars or of the smaller bar in transition splices. Bars shall be flame dried before butt splicing. Adequate jigs and clamps or other devices shall be provided to support, align, and hold the longitudinal centerline of the bars to be butt spliced in a straight line.

3.2 DOWEL INSTALLATION

Dowels shall be installed in slabs on grade at locations indicated and at right angles to joint being doweled. Dowels shall be accurately positioned and aligned parallel to the finished concrete surface before concrete placement. Dowels shall be rigidly supported during concrete placement. One end of dowels shall be coated with a bond breaker.

3.3 SPECIAL INSPECTION AND TESTING FOR SEISMIC-RESISTING SYSTEMS

Special inspections and testing for seismic-resisting systems and components shall be done in accordance with Section 01452 SPECIAL INSPECTION FOR SEISMIC-RESISTING SYSTEMS.

-- End of Section --

SECTION TABLE OF CONTENTS

DIVISION 03 - CONCRETE

SECTION 03250

EXPANSION JOINTS AND CONTRACTION JOINTS

PART 1 GENERAL

1.1 REFERENCES
1.2 SUBMITTALS
1.3 DELIVERY AND STORAGE

PART 2 PRODUCTS

2.1 CONTRACTION JOINT STRIPS
2.2 PREFORMED EXPANSION JOINT FILLER
2.3 SEALANT
2.3.1 Preformed Polychloroprene Elastomeric Type
2.3.2 Lubricant for Preformed Compression Seals
2.3.3 Hot-Poured Type

PART 3 EXECUTION

3.1 JOINTS
3.1.1 Contraction Joints
3.1.1.1 Joint Strips
3.1.1.2 Sawed Joints
3.1.2 Expansion Joints
3.1.3 Joint Sealant

-- End of Section Table of Contents --

SECTION 03250

EXPANSION JOINTS AND CONTRACTION JOINTS

PART 1 GENERAL

1.1 REFERENCES

The publications listed below form a part of this specification to the extent referenced. The publications are referred to in the text by basic designation only.

AMERICAN HARDBOARD ASSOCIATION (AHA)

AHA ANSI/AHA A135.4	(1995) Basic Hardboard

AMERICAN SOCIETY FOR TESTING AND MATERIALS (ASTM)

ASTM D 1751	(1983; R 1991) Preformed Expansion Joint Filler for Concrete Paving and Structural Construction (Nonextruding and Resilient Bituminous Types)
ASTM D 1752	(1984; R 1996) Preformed Sponge Rubber and Cork Expansion Joint Fillers for Concrete Paving and Structural Construction
ASTM D 5249	(1995) Backer Material for Use With Cold and Hot-Applied Joint Sealants in Portland-Cement Concrete and Asphalt Joints

FEDERAL SPECIFICATIONS (FS)

FS SS-S-1401	(Rev C; Notice 1) Sealant, Joint, Non-Jet-Fuel-Resistant, Hot-Applied, for Portland Cement and Asphalt Concrete Pavements
FS SS-S-200	(Rev E; Am 2) Sealants, Joint, Two-Component, Jet-Blast-Resistant, Cold-Applied, for Portland Cement Concrete Pavement

1.2 SUBMITTALS

Government approval is required for submittals with a "GA" designation; submittals having an "FIO" designation are for information only. The following shall be submitted in accordance with Section 01300 SUBMITTAL PROCEDURES:

SD-01 Data

Materials; FIO.

Manufacturer's catalog data and manufacturer's recommended instructions for

joint fillers and sealants.

SD-13 Certificates

Materials; FIO.

Certificates of compliance stating that the joint filler and sealant materials and waterstops conform to the requirements specified.

1.3 DELIVERY AND STORAGE

Material delivered and placed in storage shall be stored off the ground and protected from moisture, dirt, and other contaminants. Sealants shall be delivered in the manufacturer's original unopened containers. Sealants whose shelf life has expired shall be removed from the site.

PART 2 PRODUCTS

2.1 CONTRACTION JOINT STRIPS

Contraction joint strips shall be 3 mm (1/8 inch) thick tempered hardboard conforming to AHA A135.4, Class 1. In lieu of hardboard strips, rigid polyvinylchloride (PVC) or high impact polystyrene (HIPS) insert strips specifically designed to induce controlled cracking in slabs on grade may be used. Such insert strips shall have removable top section.

2.2 PREFORMED EXPANSION JOINT FILLER

Expansion joint filler shall be preformed material conforming to ASTM D 1751 or ASTM D 1752. Unless otherwise indicated, filler material shall be 10 mm (3/8 inch) thick and of a width applicable for the joint formed. Backer material, when required, shall conform to ASTM D 5249.

2.3 SEALANT

Joint sealant shall conform to the following:

2.3.1 Preformed Polychloroprene Elastomeric Type

ASTM D 2628.

2.3.2 Lubricant for Preformed Compression Seals

ASTM D 2835.

2.3.3 Hot-Poured Type

ASTM D 1190 tested in accordance with ASTM D 1191.

PART 3 EXECUTION

3.1 JOINTS

Joints shall be installed at locations indicated and as authorized.

3.1.1 Contraction Joints

Contraction joints may be constructed by inserting tempered hardboard strips or rigid PVC or HIPS insert strips into the plastic concrete using a steel parting bar, when necessary, or by cutting the concrete with a saw after concrete has set. Joints shall be approximately 3 mm wide and shall extend into the slab one-fourth the slab thickness, minimum, but not less than 25 mm.

3.1.1.1 Joint Strips

Strips shall be of the required dimensions and as long as practicable. After the first floating, the concrete shall be grooved with a tool at the joint locations. The strips shall be inserted in the groove and depressed until the top edge of the vertical surface is flush with the surface of the slab. The slab shall be floated and finished as specified. Working of the concrete adjacent to the joint shall be the minimum necessary to fill voids and consolidate the concrete. Where indicated, the top portion of the strip shall be sawed out after the curing period to form a recess for sealer. The removable section of PVC or HIPS strips shall be discarded and the insert left in place. Means shall be provided to insure true alignment of the strips is maintained during insertion.

3.1.1.2 Sawed Joints

Joint sawing shall be early entry dry cut(soft sawcut) to prevent uncontrolled cracking in the slab, but late enough that this can be accomplished without appreciable spalling. Concrete sawing machines shall be adequate in number and power, and with sufficient replacement blades to complete the sawing at the required rate. Joints shall be cut to true alignment and shall be cut in sequence of concrete placement. Sludge and cutting debris shall be removed.

3.1.2 Expansion Joints

Preformed expansion joint filler shall be used in expansion and isolation joints in slabs around columns and between slabs on grade and vertical surfaces where indicated. The filler shall extend the full slab depth, unless otherwise indicated. The edges of the joint shall be neatly finished with an edging tool of 3 mm (1/8 inch) radius, except where a resilient floor surface will be applied. Where the joint is to receive a sealant, the filler strips shall be installed at the proper level below the finished floor with a slightly tapered, dressed and oiled wood strip temporarily secured to the top thereof to form a recess to the size shown on the drawings. The wood strip shall be removed after the concrete has set. Contractor may opt to use a removable expansion filler cap designed and fabricated for this purpose in lieu of the wood strip. The groove shall be thoroughly cleaned of laitance, curing compound, foreign materials, protrusions of hardened concrete, and any dust which shall be blown out of the groove with oil-free compressed air.

3.1.3 Joint Sealant

Sawed contraction joints and expansion joints in slabs shall be filled with joint sealant, unless otherwise shown. Joint surfaces shall be clean, dry, and free of oil or other foreign material which would adversely affect the bond between sealant and concrete. Joint sealant shall be applied as recommended by the manufacturer of the sealant. Joints sealed with field molded sealant shall be completely filled with sealant..

SECTION TABLE OF CONTENTS

DIVISION 03 - CONCRETE

SECTION 03300

CAST-IN-PLACE STRUCTURAL CONCRETE

PART 1 GENERAL

1.1 REFERENCES
1.2 UNIT PRICE CONTRACT
1.3 LUMP SUM CONTRACT
1.4 SUBMITTALS
1.5 QUALIFICATIONS
1.6 SPECIAL REQUIREMENTS
1.7 GENERAL REQUIREMENTS
1.7.1 Tolerances
1.7.1.1 Floors
1.7.1.2 Floors by the Straightedge System
1.7.2 Strength Requirements and w/c Ratio
1.7.2.1 Strength Requirements
1.7.2.2 Water-Cement Ratio
1.7.3 Air Entrainment
1.7.4 Slump
1.7.5 Concrete Temperature
1.7.6 Size of Coarse Aggregate
1.7.7 Special Properties and Products
1.7.8 Lightweight Aggregate Structural Concrete
1.8 MIXTURE PROPORTIONS
1.8.1 Proportioning Studies for Normal Weight Concrete
1.8.2 Proportioning Studies for Flexural Strength Concrete
1.8.3 Proportioning Studies for Lightweight Aggregate Structural Concrete
1.8.4 Average Compressive Strength Required for Mixtures
1.8.4.1 Computations from Test Records
1.8.4.2 Computations without Previous Test Records
1.8.5 Average Flexural Strength Required for Mixtures
1.9 STORAGE OF MATERIALS
1.10 GOVERNMENT ASSURANCE INSPECTION AND TESTING
1.10.1 Materials
1.10.2 Fresh Concrete
1.10.3 Hardened Concrete
1.10.4 Inspection

PART 2 PRODUCTS

2.1 CEMENTITIOUS MATERIALS
2.1.1 Portland Cement
2.1.2 Pozzolan (Fly Ash)
2.2 AGGREGATES
2.2.1 Fine Aggregate
2.2.2 Coarse Aggregate
2.2.3 Lightweight Aggregate

2.3 CHEMICAL ADMIXTURES
2.3.1 Air-Entraining Admixture
2.3.2 Accelerating Admixture
2.3.3 Water-Reducing or Retarding Admixture
2.3.4 High-Range Water Reducer
2.3.5 Surface Retarder
2.3.6 Expanding Admixture
2.3.7 Other Chemical Admixtures
2.4 CURING MATERIALS
2.4.1 Impervious-Sheet
2.4.2 Membrane-Forming Compound
2.4.3 Burlap and Cotton Mat
2.5 WATER
2.6 NONSHRINK GROUT
2.7 NONSLIP SURFACING MATERIAL
2.8 LATEX BONDING AGENT
2.9 EPOXY RESIN
2.10 EMBEDDED ITEMS
2.11 VAPOR BARRIER
2.12 JOINT MATERIALS
2.12.1 Joint Fillers, Sealers, and Waterstops

PART 3 EXECUTION

3.1 PREPARATION FOR PLACING
3.1.1 Foundations
3.1.1.1 Concrete on Earth Foundations
3.1.1.2 Preparation of Rock
3.1.1.3 Excavated Surfaces in Lieu of Forms
3.1.2 Previously Placed Concrete
3.1.2.1 Preparation of Previously Placed Concrete
3.1.3 Vapor Barrier
3.1.4 Embedded Items
3.2 CONCRETE PRODUCTION
3.2.1 Batching, Mixing, and Transporting Concrete
3.2.1.1 General
3.2.1.2 Batching Equipment
3.2.1.3 Scales
3.2.1.4 Batching Tolerances
3.2.1.5 Moisture Control
3.2.1.6 Concrete Mixers
3.2.1.7 Stationary Mixers
3.2.1.8 Truck Mixers
3.3 LIGHTWEIGHT AGGREGATE CONCRETE
3.4 TRANSPORTING CONCRETE TO PROJECT SITE
3.5 CONVEYING CONCRETE ON SITE
3.5.1 Buckets
3.5.2 Transfer Hoppers
3.5.3 Trucks
3.5.4 Chutes
3.5.5 Belt Conveyors
3.5.6 Concrete Pumps
3.6 PLACING CONCRETE
3.6.1 Depositing Concrete
3.6.2 Consolidation
3.6.3 Cold Weather Requirements
3.6.4 Hot Weather Requirements
3.6.5 Prevention of Plastic Shrinkage Cracking
3.6.6 Placing Concrete in Congested Areas

3.6.7 Placing Flowable Concrete
3.7 JOINTS
3.7.1 Construction Joints
3.7.2 Contraction Joints in Slabs on Grade
3.7.3 Expansion Joints
3.7.4 Waterstops
3.7.5 Dowels and Tie Bars
3.8 FINISHING FORMED SURFACES
3.8.1 Class A Finish and Class B Finish
3.8.2 Class C and Class D Finish
3.8.3 Architectural Finishes
3.9 REPAIRS
3.9.1 Damp-Pack Mortar Repair
3.9.2 Repair of Major Defects
3.9.2.1 Surface Application of Mortar Repair
3.9.2.2 Repair of Deep and Large Defects
3.9.3 Resinous and Latex Material Repair
3.10 FINISHING UNFORMED SURFACES
3.10.1 General
3.10.2 Rough Slab Finish
3.10.3 Floated Finish
3.10.4 Troweled Finish
3.10.5 Non-Slip Finish
3.10.5.1 Broomed
3.11 EXTERIOR SLAB AND RELATED ITEMS
3.11.1 Pits and Trenches
3.12 CURING AND PROTECTION
3.12.1 General
3.12.2 Moist Curing
3.12.3 Membrane Forming Curing Compounds
3.12.4 Impervious Sheeting
3.12.5 Cold Weather Curing and Protection
3.13 SETTING BASE PLATES AND BEARING PLATES
3.13.1 Damp-Pack Bedding Mortar
3.13.2 Nonshrink Grout
3.13.2.1 Mixing and Placing of Nonshrink Grout
3.13.2.2 Treatment of Exposed Surfaces
3.14 TESTING AND INSPECTION FOR CONTRACTOR QUALITY CONTROL
3.14.1 Grading and Corrective Action
3.14.1.1 Fine Aggregate
3.14.1.2 Coarse Aggregate
3.14.2 Quality of Aggregates
3.14.3 Scales, Batching and Recording
3.14.4 Batch-Plant Control
3.14.5 Concrete Mixture
3.14.6 Inspection Before Placing
3.14.7 Placing
3.14.8 Vibrators
3.14.9 Curing Inspection
3.14.10 Cold-Weather Protection
3.14.11 Mixer Uniformity
3.14.12 Reports

-- End of Section Table of Contents --

SECTION 03300

CAST-IN-PLACE STRUCTURAL CONCRETE

PART 1 GENERAL

1.1 REFERENCES

The publications listed below form a part of this specification to the extent referenced. The publications are referred to in the text by basic designation only.

ACI INTERNATIONAL (ACI)

ACI 117/117R	(1990; Errata) Standard Tolerances for Concrete Construction and Materials
ACI 211.1	(1991) Standard Practice for Selecting Proportions for Normal, Heavyweight, and Mass Concrete
ACI 211.2	(1998) Standard Practice for Selecting Proportions for Structural Lightweight Concrete
ACI 213R	(1987) Guide for Structural Lightweight Aggregate Concrete
ACI 214.3R	(1988) Simplified Version of the Recommended Practice for Evaluation of Strength Test Results of Concrete
ACI 301	(1996) Standard Specifications for Structural Concrete
ACI 303R	(1991) Guide to Cast-In-Place Architectural Concrete Practice
ACI 305R	(1991) Hot Weather Concreting
ACI 318/318R	(1995) Building Code Requirements for Reinforced Concrete and Commentary

AMERICAN ASSOCIATION OF STATE HIGHWAY AND TRANSPORTATION OFFICIALS (AASHTO)

AASHTO M 182	(1991) Burlap Cloth Made From Jute or Kenaf

AMERICAN SOCIETY FOR TESTING AND MATERIALS (ASTM)

ASTM C 31/C 31M	(1996) Making and Curing Concrete Test Specimens in the Field
ASTM C 33	(1997) Concrete Aggregates

ASTM C 39	(1996) Compressive Strength of Cylindrical Concrete Specimens
ASTM C 42	(1994) Obtaining and Testing Drilled Cores and Sawed Beams of Concrete
ASTM C 78	(1994) Flexural Strength of Concrete (Using Simple Beam With Third-Point Loading)
ASTM C 94	(1997) Ready-Mixed Concrete
ASTM C 131	(1996) Resistance to Degradation of Small-Size Coarse Aggregate by Abrasion and Impact in the Los Angeles Machine
ASTM C 136	(1996a) Sieve Analysis of Fine and Coarse Aggregates
ASTM C 143	(1990a) Slump of Hydraulic Cement Concrete
ASTM C 150	(1997) Portland Cement
ASTM C 171	(1997) Sheet Materials for Curing Concrete
ASTM C 172	(1997) Sampling Freshly Mixed Concrete
ASTM C 173	(1996) Air Content of Freshly Mixed Concrete by the Volumetric Method
ASTM C 192/C 192M	(1995) Making and Curing Concrete Test Specimens in the Laboratory
ASTM C 231	(1997) Air Content of Freshly Mixed Concrete by the Pressure Method
ASTM C 260	(1995) Air-Entraining Admixtures for Concrete
ASTM C 309	(1997) Liquid Membrane-Forming Compounds for Curing Concrete
ASTM C 330	(1989) Lightweight Aggregates for Structural Concrete
ASTM C 494	(1992) Chemical Admixtures for Concrete
ASTM C 496	(1996) Splitting Tensile Strength of Cylindrical Concrete Specimens
ASTM C 552	(1991) Cellular Glass Thermal Insulation
ASTM C 567	(1991) Unit Weight of Structural Lightweight Concrete
ASTM C 578	(1995) Rigid, Cellular Polystyrene Thermal Insulation

ASTM C 591	(1994) Unfaced Preformed Rigid Cellular Polyisocyanurate Thermal Insulation
ASTM C 595	(1995a) Blended Hydraulic Cements
ASTM C 618	(1997) Coal Fly Ash and Raw or Calcined Natural Pozzolan for Use as a Mineral Admixture in Concrete
ASTM C 685	(1995a) Concrete Made by Volumetric Batching and Continuous Mixing
ASTM C 881	(1990) Epoxy-Resin-Base Bonding Systems for Concrete
ASTM C 937	(1980; R 1991) Grout Fluidifier for Preplaced-Aggregate Concrete
ASTM C 940	(1989) Expansion and Bleeding of Freshly Mixed Grouts for Preplaced-Aggregate Concrete in the Laboratory
ASTM C 989	(1997) Ground Granulated Blast-Furnace Slag for Use in Concrete and Mortars
ASTM C 1017	(1992) Chemical Admixtures for Use in Producing Flowing Concrete
ASTM C 1059	(1991) Latex Agents for Bonding Fresh to Hardened Concrete
ASTM C 1064	(1986; R 1993) Temperature of Freshly Mixed Portland Cement Concrete
ASTM C 1077	(1997) Laboratories Testing Concrete and Concrete Aggregates for Use in Construction and Criteria for Laboratory Evaluation
ASTM C 1107	(1997) Packaged Dry, Hydraulic-Cement Grout (Nonshrink)
ASTM C 1116	(1995) Fiber-Reinforced Concrete and Shotcrete
ASTM C 1240	(1997) Silica Fume for Use as a Mineral Admixture in Hydraulic-Cement Concrete, Mortar and Grout
ASTM D 75	(1987; R 1992) Sampling Aggregates
ASTM D 1751	(1983; R 1991) Preformed Expansion Joint Filler for Concrete Paving and Structural Construction (Nonextruding and Resilient Bituminous Types)
ASTM D 1752	(1984; R 1992) Preformed Sponge Rubber and Cork Expansion Joint Fillers for Concrete Paving and Structural Construction

ASTM E 96	(1995) Water Vapor Transmission of Materials
ASTM E 1155	(1996) Determining Floor Flatness and Levelness Using the F-Number System

CORPS OF ENGINEERS (COE)

COE CRD-C 94	(1995) Surface Retarders
COE CRD-C 104	(1980) Method of Calculation of the Fineness Modulus of Aggregate
COE CRD-C 400	(1963) Requirements for Water for Use in Mixing or Curing Concrete
COE CRD-C 521	(1981) Standard Test Method for Frequency and Amplitude of Vibrators for Concrete
COE CRD-C 540	(1971; R 1981) Standard Specification for Nonbituminous Inserts for Contraction Joints in Portland Cement Concrete Airfield Pavements, Sawable Type
COE CRD-C 572	(1974) Corps of Engineers Specifications for Polyvinylchloride Waterstop

NATIONAL INSTITUTE OF STANDARDS AND TECHNOLOGY (NIST)

NIST HB 44	(1997) NIST Handbook 44: Specifications, Tolerances, and Other Technical Requirements for Weighing and Measuring Devices

NATIONAL READY-MIXED CONCRETE ASSOCIATION (NRMCA)

NRMCA CPMB 100	(1990) Concrete Plant Standards
NRMCA TMMB 100	(1994) Truck Mixer Agitator and Front Discharge Concrete Carrier Standards
NRMCA QC 3	(1984) Quality Control Manual: Section 3, Plant Certifications Checklist: Certification of Ready Mixed Concrete Production Facilities

1.2 UNIT PRICE CONTRACT

1.3 LUMP SUM CONTRACT

Under this type of contract concrete items will be paid for by lump sum and will not be measured. The work covered by these items consists of furnishing all concrete materials, reinforcement, miscellaneous embedded materials, and equipment, and performing all labor for the forming, manufacture, transporting, placing, finishing, curing, and protection of concrete in these structures.

1.4 SUBMITTALS

Government approval is required for submittals with a "GA" designation; submittals having an "FIO" designation are for information only. The following shall be submitted in accordance with Section 01330 SUBMITTAL PROCEDURES:

SD-08 Statements

Mixture Proportions; GA.

The results of trial mixture design studies along with a statement giving the maximum nominal coarse aggregate size and the proportions of ingredients that will be used in the manufacture of each strength or class of concrete, at least 14 days prior to commencing concrete placing operations. Aggregate weights shall be based on the saturated surface dry condition. The statement shall be accompanied by test results from an approved independent commercial testing laboratory, showing that mixture design studies have been made with materials proposed for the project and that the proportions selected will produce concrete of the qualities indicated. No substitutions shall be made in the materials used in the mixture design studies without additional tests to show that the quality of the concrete is satisfactory.

Lightweight Aggregate Concrete; GA.

Written recommendations from lightweight aggregate supplier on batching and mixing cycles.

SD-09 Reports

Testing and Inspection for Contractor Quality Control; GA.

Certified copies of laboratory test reports, including mill tests and all other test data, for portland cement, blended cement, pozzolan, ground granulated blast furnace slag, silica fume, aggregate, admixtures, and curing compound proposed for use on this project.

SD-13 Certificates

Qualifications; GA.

Written documentation for Contractor Quality Control personnel.

1.5 QUALIFICATIONS

Contractor Quality Control personnel assigned to concrete construction shall be American Concrete Institute (ACI) Certified Workmen in one of the following grades or shall have written evidence of having completed similar qualification programs:

Concrete Field Testing Technician, Grade I
Concrete Laboratory Testing Technician, Grade I or II
Concrete Construction Inspector, Level II

Concrete Transportation Construction Inspector or
Reinforced Concrete Special Inspector, Jointly certified by American

Concrete Institute (ACI), Building Official and Code Administrators International (BOCA), International Conference of Building Officials (ICBO), and Southern Building Code Congress International (SBCCI).

The foreman or lead journeyman of the flatwork finishing crew shall have similar qualification for ACI Concrete Flatwork Technician/Finisher or equal, with written documentation.

1.6 SPECIAL REQUIREMENTS

A pre-installation meeting with the Contracting Officer will be required at least 10 days prior to start of construction. The Contractor shall be responsible for calling the meeting; the Project Superintendent and active installation personnel shall be present.

1.7 GENERAL REQUIREMENTS

1.7.1 Tolerances

Except as otherwise specified herein, tolerances for concrete batching, mixture properties, and construction as well as definition of terms and application practices shall be in accordance with ACI 117/117R. Level and grade tolerance measurements of slabs shall be made as soon as possible after finishing; when forms or shoring are used, the measurements shall be made prior to removal.

1.7.1.1 Floors

For the purpose of this Section the following terminology correlation between ACI 117/117R and this Section shall apply:

Floor Profile Quality Classification From ACI 117/117R	This Section
Conventional Bullfloated	Same
Conventional Straightedged	Same
Flat	Float Finish or Trowel Finish
Very Flat	Same. Use only with F-system

Levelness tolerance shall not apply where design requires floors to be sloped to drains or sloped for other reasons.

1.7.1.2 Floors by the Straightedge System

The flatness of the floors shall be carefully controlled and the tolerances shall be measured by the straightedge system as specified in paragraph 4.5.7 of ACI 117/117R, using a 10 foot straightedge, within 72 hours after floor slab installation and before shores and/or forms are removed. The listed tolerances shall be met at any and every location at which the straightedge can be placed.

Bullfloated 1/8"
Straightedged 1/8"
Float Finish 1/8"
Trowel Finish 1/8"

1.7.2 Strength Requirements and w/c Ratio

1.7.2.1 Strength Requirements

Specified compressive strength (f'c) shall be as follows:

COMPRESSIVE STRENGTH	STRUCTURE OR PORTION OF STRUCTURE
5000 psi at 28 days	All Columns
4000 psi at 28 days	All Walls, Slabs, and Foundations
3000 psi at 28 days	LW Concrete Floor Topping (Toilets, Freezers, Etc.)

Concrete made with high-early strength cement shall have a 7-day strength equal to the specified 28-day strength for concrete made with Type I or II portland cement. Compressive strength shall be determined in accordance with ASTM C 39.

a. Evaluation of Concrete Compressive Strength. Compressive strength specimens (6 by 12 inch cylinders) shall be fabricated by the Contractor and laboratory cured in accordance with ASTM C 31/C 31M and tested in accordance with ASTM C 39. The strength of the concrete will be considered satisfactory so long as the average of all sets of three consecutive test results equals or exceeds the specified compressive strength f'c and no individual test result falls below the specified strength f'c by more than 500 psi. A "test" is defined as the average of two companion cylinders, or if only one cylinder is tested, the results of the single cylinder test. Additional analysis or testing, including taking cores and/or load tests may be required at the Contractor's expense when the strength of the concrete in the structure is considered potentially deficient.

b. Investigation of Low-Strength Compressive Test Results. When any strength test of standard-cured test cylinders falls below the specified strength requirement by more than 500 psi or if tests of field-cured cylinders indicate deficiencies in protection and curing, steps shall be taken to assure that the load-carrying capacity of the structure is not jeopardized. When the strength of concrete in place is considered potentially deficient, cores shall be obtained and tested in accordance with ASTM C 42. At least three representative cores shall be taken from each member or area of concrete in place that is considered potentially deficient. The location of cores will be determined by the Contracting Officer to least impair the strength of the structure. Concrete in the area represented by the core testing will be considered adequate if the average strength of the cores is equal to at least 85 percent of the specified strength requirement and if no single core is less than 75 percent of the specified strength requirement. Non-destructive tests (tests other than test cylinders or cores) shall not be used as a basis for acceptance or rejection. The Contractor shall perform the coring and repair the holes. Cores will be tested by the Government.

c. Load Tests. If the core tests are inconclusive or impractical to obtain or if structural analysis does not confirm the safety of the structure, load tests may be directed by the Contracting Officer in accordance with the requirements of ACI 318/318R. Concrete work evaluated by structural analysis or by results of a load test as being understrength shall be corrected in a manner

satisfactory to the Contracting Officer. All investigations, testing, load tests, and correction of deficiencies shall be performed by and at the expense of the Contractor and must be approved by the Contracting Officer, except that if all concrete is found to be in compliance with the drawings and specifications, the cost of investigations, testing, and load tests will be at the expense of the Government.

1.7.2.2 Water-Cement Ratio

Maximum water-cement ratio (w/c) for normal weight concrete shall be as follows:

WATER-CEMENT RATIO, BY WEIGHT	STRUCTURE OR PORTION OF STRUCTURE
0.50	Slabs
0.55	All Other

These w/c's may cause higher strengths than that required above for compressive or flexural strength. The maximum w/c required will be the equivalent w/c as determined by conversion from the weight ratio of water to cement plus pozzolan, silica fume, and ground granulated blast furnace slag (GGBF slag) by the weight equivalency method as described in ACI 211.1. In the case where silica fume or GGBF slag is used, the weight of the silica fume and GGBF slag shall be included in the equations of ACI 211.1 for the term P which is used to denote the weight of pozzolan.

1.7.3 Air Entrainment

Except as otherwise specified for lightweight concrete, all normal weight concrete shall be air entrained to contain between 4 and 7 percent total air, except that when the nominal maximum size coarse aggregate is 3/4 inch or smaller it shall be between 4.5 and 7.5 percent. Concrete with specified strength over 5000 psi may have 1.0 percent less air than specified above. Specified air content shall be attained at point of placement into the forms. Air content for normal weight concrete shall be determined in accordance with ASTM C 231. Lightweight concrete for floor topping (toilets, freezers, etc.) shall be air-entrained with a total air content of 4.5 to 7.5 percent, except that if the nominal maximum size coarse aggregate is 3/8 inch or less, the air content shall be 5.5 to 8.5 percent. Air content for lightweight concrete shall be determined in accordance with ASTM C 173.

1.7.4 Slump

Slump of the concrete, as delivered to the point of placement into the forms, shall be within the following limits. Slump shall be determined in accordance with ASTM C 143.

Structural Element	Slump Minimum	Slump Maximum
Walls, columns and beams	2 in.	4 in.

Structural Element	Slump Minimum	Slump Maximum
Foundation walls, substructure walls, footings, slabs	1 in.	3 in.
Any structural concrete approved for placement by pumping:		
At pump	2 in.	6 in.
At discharge of line	1 in.	4 in.

When use of a plasticizing admixture conforming to ASTM C 1017 or when a Type F or G high range water reducing admixture conforming to ASTM C 494 is permitted to increase the slump of concrete, concrete shall have a slump of 2 to 4 inches before the admixture is added and a maximum slump of 8 inches at the point of delivery after the admixture is added.

1.7.5 Concrete Temperature

The temperature of the concrete as delivered shall not exceed 90 degrees F. When the ambient temperature during placing is 40 degrees F or less, or is expected to be at any time within 6 hours after placing, the temperature of the concrete as delivered shall be between 55 and 75 degrees F.

1.7.6 Size of Coarse Aggregate

The largest feasible nominal maximum size aggregate (NMSA) specified in paragraph AGGREGATES shall be used in each placement. However, nominal maximum size of aggregate shall not exceed any of the following: three-fourths of the minimum cover for reinforcing bars, three-fourths of the minimum clear spacing between reinforcing bars, one-fifth of the narrowest dimension between sides of forms, or one-third of the thickness of slabs or toppings.

1.7.7 Special Properties and Products

Concrete may contain admixtures other than air entraining agents, such as water reducers, superplasticizers, or set retarding agents to provide special properties to the concrete, if specified or approved. Any of these materials to be used on the project shall be used in the mix design studies.

1.7.8 Lightweight Aggregate Structural Concrete

Lightweight aggregate structural concrete shall conform to the requirements specified for normal weight concrete except as specified herein. Specified compressive strength shall be at least 3000 psi at 28 days, as determined by test specimens that have been air dried at 50 percent relative humidity for the last 21 days. Air-dry unit weight shall be not over 115 pcf at 28 days as determined by ASTM C 567. However, fresh unit weight shall be used for acceptance during concreting, using a correlation factor between the two types of unit weight as determined during mixture design studies.

1.8 MIXTURE PROPORTIONS

Concrete shall be composed of portland cement, other cementitious and pozzolanic materials as specified, aggregates, water and admixtures as specified.

1.8.1 Proportioning Studies for Normal Weight Concrete

Trial design batches, mixture proportioning studies, and testing requirements for various classes and types of concrete specified shall be the responsibility of the Contractor. Except as specified for flexural strength concrete, mixture proportions shall be based on compressive strength as determined by test specimens fabricated in accordance with ASTM C 192/C 192M and tested in accordance with ASTM C 39. Samples of all materials used in mixture proportioning studies shall be representative of those proposed for use in the project and shall be accompanied by the manufacturer's or producer's test reports indicating compliance with these specifications. Trial mixtures having proportions, consistencies, and air content suitable for the work shall be made based on methodology described in ACI 211.1, using at least three different water-cement ratios for each type of mixture, which will produce a range of strength encompassing those required for each class and type of concrete required on the project. The maximum water-cement ratios required in the paragraph Maximum Allowable w/c Ratio will be the equivalent water-cement ratio as determined by conversion from the weight ratio of water to cement plus pozzolan, silica fume, and ground granulated blast furnace slag (GGBF slag) by the weight equivalency method as described in ACI 211.1. In the case where silica fume or GGBF slag is used, the weight of the silica fume and GGBF slag shall be included in the equations in ACI 211.1 for the term P, which is used to denote the weight of pozzolan. If pozzolan is used in the concrete mixture, the minimum pozzolan content shall be 15 percent by weight of the total cementitious material, and the maximum shall be 35 percent. Laboratory trial mixtures shall be designed for maximum permitted slump and air content. Separate sets of trial mixture studies shall be made for each combination of cementitious materials and each combination of admixtures proposed for use. No combination of either shall be used until proven by such studies, except that, if approved in writing and otherwise permitted by these specifications, an accelerator or a retarder may be used without separate trial mixture study. Separate trial mixture studies shall also be made for concrete for any conveying or placing method proposed which requires special properties and for concrete to be placed in unusually difficult placing locations. The temperature of concrete in each trial batch shall be reported. For each water-cement ratio, at least three test cylinders for each test age shall be made and cured in accordance withASTM C 192/C 192M. They shall be tested at 7 and 28 days in accordance with ASTM C 39. From these test results, a curve shall be plotted showing the relationship between water-cement ratio and strength for each set of trial mix studies. In addition, a curve shall be plotted showing the relationship between 7 day and 28 day strengths. Each mixture shall be designed to promote easy and suitable concrete placement, consolidation and finishing, and to prevent segregation and excessive bleeding.

1.8.2 Proportioning Studies for Flexural Strength Concrete

Trial design batches, mixture proportioning studies, and testing requirements shall conform to the requirements specified in paragraph Proportioning Studies for Normal Weight Concrete, except that proportions shall be based on flexural strength as determined by test specimens (beams) fabricated in accordance with ASTM C 192/C 192M and tested in accordance with ASTM C 78. Procedures given in ACI 211.1 shall be modified as necessary to accommodate flexural strength.

1.8.3 Proportioning Studies for Lightweight Aggregate Structural Concrete

Trial design batches, mixture proportioning studies, and testing requirements shall conform to the requirements specified in paragraph Proportioning Studies for Normal Weight Concrete, except as follows. Trial mixtures having proportions, consistencies and air content suitable for the work shall be made based on methodology described in ACI 211.2, using at least three different cement contents. Trial mixes shall be proportioned to produce air dry unit weight and concrete strengths specified in paragraph GENERAL REQUIREMENTS. Trial mixtures shall be proportioned for maximum permitted slump and air content. Test specimens and testing shall be as specified for normal weight concrete except that 28-day compressive strength shall be determined from test cylinders that have been air dried at 50 percent relative humidity for the last 21 days. Air dry unit weight shall be determined in accordance with ASTM C 567 and shall be designed to be at least 2.0 pcf less than the maximum specified air dry unit weight in paragraph GENERAL REQUIREMENTS. Curves shall be plotted using these results showing the relationship between cement factor and strength and air dry unit weight. Normal weight fine aggregate may be substituted for part or all of the lightweight fine aggregate, provided the concrete meets the strength and unit weight. A correlation shall also be developed showing the ratio between air dry unit weight and fresh concrete unit weight for each mix.

1.8.4 Average Compressive Strength Required for Mixtures

The mixture proportions selected during mixture design studies shall produce a required average compressive strength (f'cr) exceeding the specified compressive strength (f'c) by the amount indicated below. This required average compressive strength, f'cr, will not be a required acceptance criteria during concrete production. However, whenever the daily average compressive strength at 28 days drops below f'cr during concrete production, or daily average 7-day strength drops below a strength correlated with the 28-day f'cr, the mixture shall be adjusted, as approved, to bring the daily average back up to f'cr. During production, the required f'cr shall be adjusted, as appropriate, based on the standard deviation being attained on the job.

1.8.4.1 Computations from Test Records

Where a concrete production facility has test records, a standard deviation shall be established in accordance with the applicable provisions of ACI 214.3R. Test records from which a standard deviation is calculated shall represent materials, quality control procedures, and conditions similar to those expected; shall represent concrete produced to meet a specified strength or strengths (f'c) within 1,000 psi of that specified for proposed work; and shall consist of at least 30 consecutive tests. A strength test shall be the average of the strengths of two cylinders made from the same sample of concrete and tested at 28 days. Required average compressive strength f'cr used as the basis for selection of concrete proportions shall be the larger of the equations that follow using the standard deviation as determined above:

$f'cr = f'c + 1.34S$ where units are in psi

$f'cr = f'c + 2.33S - 500$ where units are in psi

Where S = standard deviation

Where a concrete production facility does not have test records meeting the requirements above but does have a record based on 15 to 29 consecutive

tests, a standard deviation shall be established as the product of the calculated standard deviation and a modification factor from the following table:

NUMBER OF TESTS	MODIFICATION FACTOR FOR STANDARD DEVIATION
15	1.16
20	1.08
25	1.03
30 or more	1.00

1.8.4.2 Computations without Previous Test Records

When a concrete production facility does not have sufficient field strength test records for calculation of the standard deviation, the required average strength f'cr shall be determined as follows:

a. If the specified compressive strength f'c is less than 3,000 psi,

f'cr = f'c + 1000 psi

b. If the specified compressive strength f'c is 3,000 to 5,000 psi,

f'cr = f'c + 1,200 psi

c. If the specified compressive strength f'c is over 5,000 psi,

f'cr = f'c + 1,400 psi

1.8.5 Average Flexural Strength Required for Mixtures

The mixture proportions selected during mixture design studies for flexural strength mixtures and the mixture used during concrete production shall be designed and adjusted during concrete production as approved, except that the overdesign for average flexural strength shall simply be 15 percent greater than the specified flexural strength at all times.

1.9 STORAGE OF MATERIALS

Cement and other cementitious materials shall be stored in weathertight buildings, bins, or silos which will exclude moisture and contaminants and keep each material completely separated. Aggregate stockpiles shall be arranged and used in a manner to avoid excessive segregation and to prevent contamination with other materials or with other sizes of aggregates. Aggregate shall not be stored directly on ground unless a sacrificial layer is left undisturbed. Reinforcing bars and accessories shall be stored above the ground on platforms, skids or other supports. Other materials shall be stored in such a manner as to avoid contamination and deterioration. Admixtures which have been in storage at the project site for longer than 6 months or which have been subjected to freezing shall not be used unless retested and proven to meet the specified requirements. Materials shall be capable of being accurately identified after bundles or containers are opened.

1.10 GOVERNMENT ASSURANCE INSPECTION AND TESTING

Day-to day inspection and testing shall be the responsibility of the Contractor Quality Control (CQC) staff. However, representatives of the

Contracting Officer can and will inspect construction as considered appropriate and will monitor operations of the Contractor's CQC staff. Government inspection or testing will not relieve the Contractor of any of his CQC responsibilities.

1.10.1 Materials

The Government will sample and test aggregates, cementitious materials, other materials, and concrete to determine compliance with the specifications as considered appropriate. The Contractor shall provide facilities and labor as may be necessary for procurement of representative test samples. Samples of aggregates will be obtained at the point of batching in accordance with ASTM D 75. Other materials will be sampled from storage at the jobsite or from other locations as considered appropriate. Samples may be placed in storage for later testing when appropriate.

1.10.2 Fresh Concrete

Fresh concrete will be sampled as delivered in accordance with ASTM C 172 and tested in accordance with these specifications, as considered necessary.

1.10.3 Hardened Concrete

Tests on hardened concrete will be performed by the Government when such tests are considered necessary.

1.10.4 Inspection

Concrete operations may be tested and inspected by the Government as the project progresses. Failure to detect defective work or material will not prevent rejection later when a defect is discovered nor will it obligate the Government for final acceptance.

PART 2 PRODUCTS

2.1 CEMENTITIOUS MATERIALS

Cementitious Materials shall be portland cement, portland-pozzolan cement, portland blast-furnace slag cement, or portland cement in combination with pozzolan or ground granulated blast furnace slag or silica fume and shall conform to appropriate specifications listed below. Use of cementitious materials in concrete which will have surfaces exposed in the completed structure shall be restricted so there is no change in color, source, or type of cementitious material.

2.1.1 Portland Cement

ASTM C 150, Type I with a maximum 15 percent amount of tricalcium aluminate, or Type II. White portland cement shall meet the above requirements except that it may be Type I, Type II or Type III low alkali. White Type III shall be used only in specific areas of the structure, when approved in writing.

2.1.2 Pozzolan (Fly Ash)

ASTM C 618, Class C with the optional requirements for multiple factor, drying shrinkage, and uniformity from Table 2A of ASTM C 618. Requirement for maximum alkalies from Table 1A of ASTM C 618 shall apply. If pozzolan

is used, it shall never be less than 15 percent nor more than 25 percent by weight of the total cementitious material.

2.2 AGGREGATES

Aggregates shall conform to the following.

2.2.1 Fine Aggregate

Fine aggregate shall conform to the quality and gradation requirements of ASTM C 33.

2.2.2 Coarse Aggregate

Coarse aggregate shall conform to ASTM C 33, Class 5S.

2.2.3 Lightweight Aggregate

Lightweight fine and coarse aggregate shall conform to the quality and gradation requirements of ASTM C 330, size 3/8 for coarse aggregate. Lightweight aggregate shall be prewetted in accordance with the Manufacturer's instructions unless otherwise specified. For pumped concrete, prewetting shall be sufficient to ensure that slump loss through the pump line does not exceed 4 inches.

2.3 CHEMICAL ADMIXTURES

Chemical admixtures, when required or permitted, shall conform to the appropriate specification listed. Admixtures shall be furnished in liquid form and of suitable concentration for easy, accurate control of dispensing.

2.3.1 Air-Entraining Admixture

ASTM C 260 and shall consistently entrain the air content in the specified ranges under field conditions.

2.3.2 Accelerating Admixture

ASTM C 494, Type C or E, except that calcium chloride or admixtures containing calcium chloride shall not be used.

2.3.3 Water-Reducing or Retarding Admixture

ASTM C 494, Type A, B, or D, except that the 6-month and 1-year compressive and flexural strength tests are waived.

2.3.4 High-Range Water Reducer

ASTM C 494, Type F or G, except that the 6-month and 1-year strength requirements are waived. The admixture shall be used only when approved in writing, such approval being contingent upon particular mixture control as described in the Contractor's Quality Control Plan and upon performance of separate mixture design studies.

2.3.5 Surface Retarder

COE CRD-C 94.

2.3.6 Expanding Admixture

Aluminum powder type expanding admixture conforming to ASTM C 937.

2.3.7 Other Chemical Admixtures

Chemical admixtures for use in producing flowing concrete shall comply with ASTM C 1017, Type I or II. These admixtures shall be used only when approved in writing, such approval being contingent upon particular mixture control as described in the Contractor's Quality Control Plan and upon performance of separate mixture design studies.

2.4 CURING MATERIALS

2.4.1 Impervious-Sheet

Impervious-sheet materials shall conform to ASTM C 171, type optional, except, that polyethylene sheet shall not be used.

2.4.2 Membrane-Forming Compound

Membrane-Forming curing compound shall conform to ASTM C 309, Type 1-D or 2, except that only a styrene acrylate or chlorinated rubber compound meeting Class B requirements shall be used for surfaces that are to be painted or are to receive bituminous roofing, or waterproofing, or floors that are to receive adhesive applications of resilient flooring. The curing compound selected shall be compatible with any subsequent paint, roofing, waterproofing, or flooring specified. Nonpigmented compound shall contain a fugitive dye, and shall have the reflective requirements in ASTM C 309 waived.

2.4.3 Burlap and Cotton Mat

Burlap and cotton mat used for curing shall conform to AASHTO M 182.

2.5 WATER

Water for mixing and curing shall be fresh, clean, potable, and free of injurious amounts of oil, acid, salt, or alkali, except that non-potable water may be used if it meets the requirements of COE CRD-C 400.

2.6 NONSHRINK GROUT

Nonshrink grout shall conform to ASTM C 1107, Grade A , and shall be a commercial formulation suitable for the proposed application.

2.7 NONSLIP SURFACING MATERIAL

Nonslip surfacing material shall consist of 55 percent, minimum, aluminum oxide or silicon-dioxide abrasive ceramically bonded together to form a homogeneous material sufficiently porous to provide a good bond with portland cement paste; or factory-graded emery aggregate consisting of not less than 45 percent aluminum oxide and 25 percent ferric oxide. The aggregate shall be well graded from particles retained on the No. 30 sieve to particles passing the No. 8 sieve.

2.8 LATEX BONDING AGENT

Latex agents for bonding fresh to hardened concrete shall conform to ASTM C 1059.

2.9 EPOXY RESIN

Epoxy resins for use in repairs shall conform to ASTM C 881, Type V, Grade 2. Class as appropriate to the existing ambient and surface temperatures.

2.10 EMBEDDED ITEMS

Embedded items shall be of the size and type indicated or as needed for the application. Dovetail slots shall be galvanized steel. Hangers for suspended ceilings shall be as specified in Section 09510 ACOUSTICAL CEILINGS. Inserts for shelf angles and bolt hangers shall be of malleable iron or cast or wrought steel.

2.11 VAPOR BARRIER

Vapor barrier shall be polyethylene sheeting with a minimum thickness of 6 mils or other equivalent material having a vapor permeance rating not exceeding 0.5 perms as determined in accordance with ASTM E 96.

2.12 JOINT MATERIALS

2.12.1 Joint Fillers, Sealers, and Waterstops

Expansion joint fillers shall be preformed materials conforming to ASTM D 1751. Materials for waterstops shall be in accordance with Section 03250 EXPANSION JOINTS AND CONTRACTION JOINTS. Materials for and sealing of joints shall conform to the requirements of Section [07900 JOINT SEALING] .

PART 3 EXECUTION

3.1 PREPARATION FOR PLACING

Before commencing concrete placement, the following shall be performed. Surfaces to receive concrete shall be clean and free from frost, ice, mud, and water. Forms shall be in place, cleaned, coated, and adequately supported, in accordance with Section 03100 STRUCTURAL CONCRETE FORMWORK. Reinforcing steel shall be in place, cleaned, tied, and adequately supported, in accordance with Section 03200 CONCRETE REINFORCEMENT. Transporting and conveying equipment shall be in-place, ready for use, clean, and free of hardened concrete and foreign material. Equipment for consolidating concrete shall be at the placing site and in proper working order. Equipment and material for curing and for protecting concrete from weather or mechanical damage shall be at the placing site, in proper working condition and in sufficient amount for the entire placement. When hot, windy conditions during concreting appear probable, equipment and material shall be at the placing site to provide windbreaks, shading, fogging, or other action to prevent plastic shrinkage cracking or other damaging drying of the concrete.

3.1.1 Foundations

3.1.1.1 Concrete on Earth Foundations

Earth (subgrade, base, or subbase courses) surfaces upon which concrete is to be placed shall be clean, damp, and free from debris, frost, ice, and standing or running water. Prior to placement of concrete, the foundation shall be well drained and shall be satisfactorily graded and uniformly compacted.

3.1.1.2 Preparation of Rock

Rock surfaces upon which concrete is to be placed shall be free from oil, standing or running water, ice, mud, drummy rock, coating, debris, and loose, semidetached or unsound fragments. Joints in rock shall be cleaned to a satisfactory depth, as determined by the Contracting Officer, and to firm rock on the sides. Immediately before the concrete is placed, rock surfaces shall be cleaned thoroughly by the use of air-water jets or sandblasting as specified below for Previously Placed Concrete. Rock surfaces shall be kept continuously moist for at least 24 hours immediately prior to placing concrete thereon. All horizontal and approximately horizontal surfaces shall be covered, immediately before the concrete is placed, with a layer of mortar proportioned similar to that in the concrete mixture. Concrete shall be placed before the mortar stiffens.

3.1.1.3 Excavated Surfaces in Lieu of Forms

Concrete for footings may be placed directly against the soil provided the earth or rock has been carefully trimmed, is uniform and stable, and meets the compaction requirements of Section 02315EXCAVATION, FILLING, AND BACKFILLING FOR BUILDINGS. The concrete shall be placed without becoming contaminated by loose material, and the outline of the concrete shall be within the specified tolerances.

3.1.2 Previously Placed Concrete

Concrete surfaces to which additional concrete is to be bonded shall be prepared for receiving the new concrete by cleaning the exposed joint surface with sandblasting, bushammer, or other approved method. Regardless of the method used, the resulting surfaces shall be free from all laitance and inferior concrete so that clean surfaces of well bonded coarse aggregate are exposed with a minimum amplitude of 1/4" throughout the surface. The edges of the coarse aggregate shall not be undercut. The surface of horizontal construction joints shall be kept continuously wet for the first 12 hours during the 24-hour period prior to placing fresh concrete. The surface shall be washed completely clean as the last operation prior to placing the next lift.

3.1.2.1 Preparation of Previously Placed Concrete

Concrete surfaces to which other concrete is to be bonded shall be abraded in an approved manner that will expose sound aggregate to an amplitude of 1/4" without damaging the concrete. Laitance and loose particles shall be removed. Surfaces shall be thoroughly washed and shall be moist but without free water when concrete is placed. Coat the existing surface with a bonding agent prior to placing new concrete.

3.1.3 Vapor Barrier

Vapor barrier shall be provided beneath the interior on-grade concrete floor slabs. The greatest widths and lengths practicable shall be used to eliminate joints wherever possible. Joints shall be lapped a minimum of 12 inches. Torn, punctured, or damaged vapor barrier material shall be removed and new vapor barrier shall be provided prior to placing concrete. For minor repairs, patches may be made using laps of at least 12 inches. Lapped joints shall be sealed and edges patched with pressure-sensitive adhesive or tape not less than 2 inches wide and compatible with the membrane. Vapor barrier shall be placed directly on underlying subgrade,

base course, or capillary water barrier, unless it consists of crushed material or large granular material which could puncture the vapor barrier. In this case, the surface shall be choked with a light layer of sand, as approved, before placing the vapor barrier. A 2 inch layer of compacted, clean concrete sand (fine aggregate) shall be placed on top of the vapor barrier before placing concrete. Concrete placement shall be controlled so as to prevent damage to the vapor barrier, or any covering sand.

3.1.4 Embedded Items

Before placement of concrete, care shall be taken to determine that all embedded items are firmly and securely fastened in place as indicated on the drawings, or required. Conduit and other embedded items shall be clean and free of oil and other foreign matter such as loose coatings or rust, paint, and scale. The embedding of wood in concrete will be permitted only when specifically authorized or directed. Voids in sleeves, inserts, and anchor slots shall be filled temporarily with readily removable materials to prevent the entry of concrete into voids. Welding shall not be performed on embedded metals within 1 feet of the surface of the concrete. Tack welding shall not be performed on or to embedded items.

3.2 CONCRETE PRODUCTION

3.2.1 Batching, Mixing, and Transporting Concrete

Concrete shall either be batched and mixed onsite or shall be furnished from a ready-mixed concrete plant. Ready-mixed concrete shall be batched, mixed, and transported in accordance with ASTM C 94, except as otherwise specified. Truck mixers, agitators, and nonagitating transporting units shall comply with NRMCA TMMB 100. Ready-mix plant equipment and facilities shall be certified in accordance with NRMCA QC 3. Approved batch tickets shall be furnished for each load of ready-mixed concrete. Site-mixed concrete shall conform to the following subparagraphs.

3.2.1.1 General

The batching plant shall be located off site close to the project. The batching, mixing and placing system shall have a capacity of at least 10 cubic yards per hour. The batching plant shall conform to the requirements of NRMCA CPMB 100 and as specified; however, rating plates attached to batch plant equipment are not required.

3.2.1.2 Batching Equipment

The batching controls shall be semiautomatic or automatic, as defined in NRMCA CPMB 100. A semiautomatic batching system shall be provided with interlocks such that the discharge device cannot be actuated until the indicated material is within the applicable tolerance. The batching system shall be equipped with accurate recorder or recorders that meet the requirements of NRMCA CPMB 100. The weight of water and admixtures shall be recorded if batched by weight. Separate bins or compartments shall be provided for each size group of aggregate and type of cementitious material, to prevent intermingling at any time. Aggregates shall be weighed either in separate weigh batchers with individual scales or, provided the smallest size is batched first, cumulatively in one weigh batcher on one scale. Aggregate shall not be weighed in the same batcher with cementitious material. If both portland cement and other cementitious material are used, they may be batched cumulatively, provided that the portland cement is batched first . Water may be measured by weight or

volume. Water shall not be weighed or measured cumulatively with another ingredient. Filling and discharging valves for the water metering or batching system shall be so interlocked that the discharge valve cannot be opened before the filling valve is fully closed. Admixtures shall be furnished as a liquid of suitable concentration for easy control of dispensing. An adjustable, accurate, mechanical device for measuring and dispensing each admixture shall be provided. Each admixture dispenser shall be interlocked with the batching and discharging operation of the water so that each admixture is separately batched and individually discharged automatically in a manner to obtain uniform distribution throughout the water as it is added to the batch in the specified mixing period. When use of truck mixers makes this requirement impractical, the admixture dispensers shall be interlocked with the sand batchers. Different admixtures shall not be combined prior to introduction in water and shall not be allowed to intermingle until in contact with the cement. Admixture dispensers shall have suitable devices to detect and indicate flow during dispensing or have a means for visual observation. The plant shall be arranged so as to facilitate the inspection of all operations at all times. Suitable facilities shall be provided for obtaining representative samples of aggregates from each bin or compartment, and for sampling and calibrating the dispensing of cementitious material, water, and admixtures. Filling ports for cementitious materials bins or silos shall be clearly marked with a permanent sign stating the contents.

3.2.1.3 Scales

The weighing equipment shall conform to the applicable requirements of CPMB Concrete Plant Standard, and of NIST HB 44, except that the accuracy shall be plus or minus 0.2 percent of scale capacity. The Contractor shall provide standard test weights and any other auxiliary equipment required for checking the operating performance of each scale or other measuring devices. The tests shall be made at the specified frequency in the presence of a Government inspector. The weighing equipment shall be arranged so that the plant operator can conveniently observe all dials or indicators.

3.2.1.4 Batching Tolerances

(A) Tolerances with Weighing Equipment

MATERIAL	PERCENT OF REQUIRED WEIGHT
Cementitious materials	0 to plus 2
Aggregate	plus or minus 2
Water	plus or minus 1
Chemical admixture	0 to plus 6

(B) Tolerances with Volumetric Equipment

For volumetric batching equipment used for water and admixtures, the following tolerances shall apply to the required volume of material being batched:

MATERIAL	PERCENT OF REQUIRED MATERIAL
Water:	plus or minus 1 percent
Chemical admixtures:	0 to plus 6 percent

3.2.1.5 Moisture Control

The plant shall be capable of ready adjustment to compensate for the varying moisture content of the aggregates and to change the weights of the materials being batched.

3.2.1.6 Concrete Mixers

Mixers shall be stationary mixers or truck mixers. Mixers shall be capable of combining the materials into a uniform mixture and of discharging this mixture without segregation. The mixers shall not be charged in excess of the capacity recommended by the manufacturer. The mixers shall be operated at the drum or mixing blade speed designated by the manufacturer. The mixers shall be maintained in satisfactory operating condition, and the mixer drums shall be kept free of hardened concrete. Should any mixer at any time produce unsatisfactory results, its use shall be promptly discontinued until it is repaired.

3.2.1.7 Stationary Mixers

Concrete plant mixers shall be drum-type mixers of tilting, nontilting, horizontal-shaft, or vertical-shaft type, or shall be pug mill type and shall be provided with an acceptable device to lock the discharge mechanism until the required mixing time has elapsed. The mixing time and uniformity shall conform to all the requirements in ASTM C 94 applicable to central-mixed concrete.

3.2.1.8 Truck Mixers

Truck mixers, the mixing of concrete therein, and concrete uniformity shall conform to the requirements of ASTM C 94. A truck mixer may be used either for complete mixing (transit-mixed) or to finish the partial mixing done in a stationary mixer (shrink-mixed). Each truck shall be equipped with two counters from which it is possible to determine the number of revolutions at mixing speed and the number of revolutions at agitating speed. Or, if approved in lieu of this, the number of revolutions shall be marked on the batch tickets. Water shall not be added at the placing site unless specifically approved; and in no case shall it exceed the specified w/c. Any such water shall be injected at the base of the mixer, not at the discharge end.

3.3 LIGHTWEIGHT AGGREGATE CONCRETE

In addition to the requirements specified for normal weight concrete, lightweight aggregate concrete shall conform to the following. The batching and mixing cycle shall be as directed based on written recommendations from the aggregate supplier which the Contractor shall furnish. Unless otherwise directed, the mixer shall be charged with approximately 2/3 of the total mixing water and all of the aggregate. This shall be mixed for at least 1-1/2 minutes in a stationary mixer or 15 revolutions at mixing speed in a truck mixer. The remaining ingredients shall then be added and mixing continued as specified for normal weight

concrete. Lightweight aggregate concrete shall not be vibrated to the extent that large particles of aggregate float to the surface. During finishing, lightweight aggregate concrete shall not be worked to the extent that mortar is driven down and lightweight coarse aggregate appears at the surface. Lightweight aggregate concrete to be pumped shall have a cement content of at least 564 lb. per cu. yd.

3.4 TRANSPORTING CONCRETE TO PROJECT SITE

Concrete shall be transported to the placing site in truck mixers, agitators, nonagitating transporting equipment conforming to NRMCA TMMB 100 or by approved pumping equipment . Nonagitating equipment, other than pumps, shall not be used for transporting lightweight aggregate concrete.

3.5 CONVEYING CONCRETE ON SITE

Concrete shall be conveyed from mixer or transporting unit to forms as rapidly as possible and within the time interval specified by methods which will prevent segregation or loss of ingredients using following equipment. Conveying equipment shall be cleaned before each placement.

3.5.1 Buckets

The interior hopper slope shall be not less than 58 degrees from the horizontal, the minimum dimension of the clear gate opening shall be at least 5 times the nominal maximum-size aggregate, and the area of the gate opening shall not be less than 2 square feet.The maximum dimension of the gate opening shall not be greater than twice the minimum dimension. The bucket gates shall be essentially grout tight when closed and may be manually, pneumatically, or hydraulically operated except that buckets larger than 2 cubic yards shall not be manually operated. The design of the bucket shall provide means for positive regulation of the amount and rate of deposit of concrete in each dumping position.

3.5.2 Transfer Hoppers

Concrete may be charged into nonagitating hoppers for transfer to other conveying devices. Transfer hoppers shall be capable of receiving concrete directly from delivery vehicles and shall have conical-shaped discharge features. The transfer hopper shall be equipped with a hydraulically operated gate and with a means of external vibration to effect complete discharge. Concrete shall not be held in nonagitating transfer hoppers more than 30 minutes.

3.5.3 Trucks

Truck mixers operating at agitating speed or truck agitators used for transporting plant-mixed concrete shall conform to the requirements of ASTM C 94. Nonagitating equipment shall be used only for transporting plant-mixed concrete over a smooth road and when the hauling time is less than 15 minutes. Bodies of nonagitating equipment shall be smooth, watertight, metal containers specifically designed to transport concrete, shaped with rounded corners to minimize segregation, and equipped with gates that will permit positive control of the discharge of the concrete.

3.5.4 Chutes

When concrete can be placed directly from a truck mixer, agitator, or nonagitating equipment, the chutes normally attached to this equipment by

the manufacturer may be used. A discharge deflector shall be used when required by the Contracting Officer. Separate chutes and other similar equipment will not be permitted for conveying concrete.

3.5.5 Belt Conveyors

Belt conveyors shall be designed and operated to assure a uniform flow of concrete from mixer to final place of deposit without segregation of ingredients or loss of mortar and shall be provided with positive means, such as discharge baffle or hopper , for preventing segregation of the concrete at the transfer points and the point of placing. Belt conveyors shall be constructed such that the idler spacing shall not exceed 36 inches. The belt speed shall be a minimum of 300 feet per minute and a maximum of 750 feet per minute. If concrete is to be placed through installed horizontal or sloping reinforcing bars, the conveyor shall discharge concrete into a pipe or elephant truck that is long enough to extend through the reinforcing bars.

3.5.6 Concrete Pumps

Concrete may be conveyed by positive displacement pump when approved. The pumping equipment shall be piston or squeeze pressure type; pneumatic placing equipment shall not be used. The pipeline shall be rigid steel pipe or heavy-duty flexible hose. The inside diameter of the pipe shall be at least 3 times the nominal maximum-size coarse aggregate in the concrete mixture to be pumped but not less than 4 inches. Aluminum pipe shall not be used.

3.6 PLACING CONCRETE

Mixed concrete shall be discharged within 1-1/2 hours or before the mixer drum has revolved 300 revolutions, whichever comes first after the introduction of the mixing water to the cement and aggregates. When the concrete temperature exceeds 85 degrees F, the time shall be reduced to 45 minutes. Concrete shall be placed within 15 minutes after it has been discharged from the transporting unit. Concrete shall be handled from mixer or transporting unit to forms in a continuous manner until the approved unit of operation is completed. Adequate scaffolding, ramps and walkways shall be provided so that personnel and equipment are not supported by in-place reinforcement. Placing will not be permitted when the sun, heat, wind, or limitations of facilities furnished by the Contractor prevent proper consolidation, finishing and curing. Sufficient placing capacity shall be provided so that concrete can be kept free of cold joints.

3.6.1 Depositing Concrete

Concrete shall be deposited as close as possible to its final position in the forms, and there shall be no vertical drop greater than 5 feet except where suitable equipment is provided to prevent segregation and where specifically authorized. Depositing of the concrete shall be so regulated that it will be effectively consolidated in horizontal layers not more than 12 inches thick, except that all slabs shall be placed in a single layer. Concrete to receive other construction shall be screeded to the proper level. Concrete shall be deposited continuously in one layer or in layers so that fresh concrete is deposited on in-place concrete that is still plastic. Fresh concrete shall not be deposited on concrete that has hardened sufficiently to cause formation of seams or planes of weakness within the section. Concrete that has surface dried, partially hardened,

or contains foreign material shall not be used. When temporary spreaders are used in the forms, the spreaders shall be removed as their service becomes unnecessary. Concrete shall not be placed in slabs over columns and walls until concrete in columns and walls has been in-place at least two hours or until the concrete begins to lose its plasticity. Concrete for beams, girders, brackets, column capitals, haunches, and drop panels shall be placed at the same time as concrete for adjoining slabs.

3.6.2 Consolidation

Immediately after placing, each layer of concrete shall be consolidated by internal vibrators, except for slabs 4 inches thick or less. The vibrators shall at all times be adequate in effectiveness and number to properly consolidate the concrete; a spare vibrator shall be kept at the jobsite during all concrete placing operations. The vibrators shall have a frequency of not less than 10,000 vibrations per minute, an amplitude of at least 0.025 inch, and the head diameter shall be appropriate for the structural member and the concrete mixture being placed. Vibrators shall be inserted vertically at uniform spacing over the area of placement. The distance between insertions shall be approximately 1-1/2 times the radius of action of the vibrator so that the area being vibrated will overlap the adjacent just-vibrated area by a reasonable amount. The vibrator shall penetrate rapidly to the bottom of the layer and at least 6 inches into the preceding layer if there is such. Vibrator shall be held stationary until the concrete is consolidated and then vertically withdrawn slowly while operating. Form vibrators shall not be used unless specifically approved and unless forms are constructed to withstand their use. Vibrators shall not be used to move concrete within the forms. Slabs 4 inches and less in thickness shall be consolidated by properly designed vibrating screeds or other approved technique. Excessive vibration of lightweight concrete resulting in segration or flotation of coarse aggregate shall be prevented. Frequency and amplitude of vibrators shall be determined in accordance with COE CRD-C 521. Grate tampers ("jitterbugs") shall not be used.

3.6.3 Cold Weather Requirements

Special protection measures, approved by the Contracting Officer, shall be used if freezing temperatures are anticipated before the expiration of the specified curing period. The ambient temperature of the air where concrete is to be placed and the temperature of surfaces to receive concrete shall be not less than 40 degrees F. The temperature of the concrete when placed shall be not less than 50 degrees F nor more than 75 degrees F. Heating of the mixing water or aggregates will be required to regulate the concrete placing temperature. Materials entering the mixer shall be free from ice, snow, or frozen lumps. Salt, chemicals or other materials shall not be incorporated in the concrete to prevent freezing. Upon written approval, an accelerating admixture conforming to ASTM C 494, Type C or E may be used, provided it contains no calcium chloride. Calcium chloride shall not be used.

3.6.4 Hot Weather Requirements

When the ambient temperature during concrete placing is expected to exceed 85 degrees F, the concrete shall be placed and finished with procedures previously submitted and as specified herein. The concrete temperature at time of delivery to the forms shall not exceed the temperature shown in the table below when measured in accordance with ASTM C 1064. Cooling of the mixing water or aggregates or placing concrete in the cooler part of the day may be required to obtain an adequate placing temperature. A retarder

may be used, as approved, to facilitate placing and finishing. Steel forms and reinforcements shall be cooled as approved prior to concrete placement when steel temperatures are greater than 120 degrees F. Conveying and placing equipment shall be cooled if necessary to maintain proper concrete-placing temperature.

Maximum Allowable Concrete Placing Temperature

Relative Humidity, Percent, During Time of Concrete Placement	Maximum Allowable Concrete Temperature Degrees
Greater than 60	90 F
40-60	85 F
Less than 40	80 F

3.6.5 Prevention of Plastic Shrinkage Cracking

During hot weather with low humidity, and particularly with appreciable wind, as well as interior placements when space heaters produce low humidity, the Contractor shall be alert to the tendency for plastic shrinkage cracks to develop and shall institute measures to prevent this. Particular care shall be taken if plastic shrinkage cracking is potentially imminent and especially if it has developed during a previous placement. Periods of high potential for plastic shrinkage cracking can be anticipated by use of Fig. 2.1.5 of ACI 305R. In addition the concrete placement shall be further protected by erecting shades and windbreaks and by applying fog sprays of water, sprinkling, ponding or wet covering. Plastic shrinkage cracks that occur shall be filled by injection of epoxy resin as directed, after the concrete hardens. Plastic shrinkage cracks shall never be troweled over or filled with slurry.

3.6.6 Placing Concrete in Congested Areas

Special care shall be used to ensure complete filling of the forms, elimination of all voids, and complete consolidation of the concrete when placing concrete in areas congested with reinforcing bars, embedded items, waterstops and other tight spacing. An appropriate concrete mixture shall be used, and the nominal maximum size of aggregate (NMSA) shall meet the specified criteria when evaluated for the congested area. Vibrators with heads of a size appropriate for the clearances available shall be used, and the consolidation operation shall be closely supervised to ensure complete and thorough consolidation at all points. Where necessary, splices of reinforcing bars shall be alternated to reduce congestion. Where two mats of closely spaced reinforcing are required, the bars in each mat shall be placed in matching alignment to reduce congestion.

3.6.7 Placing Flowable Concrete

If a plasticizing admixture conforming to ASTM C 1017 is used or if a Type F or G high range water reducing admixture is permitted to increase the slump, the concrete shall meet all requirements of paragraph GENERAL REQUIREMENTS in PART 1. Extreme care shall be used in conveying and placing the concrete to avoid segregation. Consolidation and finishing shall meet all requirements of paragraphs Placing Concrete, Finishing Formed Surfaces, and Finishing Unformed Surfaces. No relaxation of requirements to accommodate flowable concrete will be permitted.

3.7 JOINTS

Joints shall be located and constructed as indicated or approved. Joints not indicated on the drawings shall be located and constructed to minimize the impact on the strength of the structure. In general, such joints shall be located near the middle of the spans of supported slabs, beams, and girders unless a beam intersects a girder at this point, in which case the joint in the girder shall be offset a distance equal to twice the width of the beam. Joints in walls and columns shall be at the underside of floors, slabs, beams, or girders and at the tops of footings or floor slabs, unless otherwise approved. Joints shall be perpendicular to the main reinforcement. All reinforcement shall be continued across joints; except that reinforcement or other fixed metal items shall not be continuous through expansion joints, or through construction or contraction joints in slabs on grade. Reinforcement shall be 2 inches clear from each joint. Except where otherwise indicated, construction joints between interior slabs on grade and vertical surfaces shall consist of 30 pound asphalt-saturated felt, extending for the full depth of the slab. The perimeters of the slabs shall be free of fins, rough edges, spalling, or other unsightly appearance. Reservoir for sealant for construction and contraction joints in slabs shall be formed to the dimensions shown on the drawings by removing snap-out joint-forming inserts, by sawing sawable inserts, or by sawing to widen the top portion of sawed joints. Joints to be sealed shall be cleaned and sealed as indicated and in accordance with Section 07900 JOINT SEALING.

3.7.1 Construction Joints

For concrete other than slabs on grade, construction joints shall be located so that the unit of operation does not exceed 10 feet. Concrete shall be placed continuously so that each unit is monolithic in construction. Fresh concrete shall not be placed against adjacent previously placed concrete until it is at least 24 hours old. Construction joints shall be located as indicated or approved. Where concrete work is interrupted by weather, end of work shift or other similar type of delay, location and type of construction joint shall be subject to approval of the Contracting Officer. Unless otherwise indicated and except for slabs on grade, reinforcing steel shall extend through construction joints. Construction joints in slabs on grade shall be keyed or doweled as shown. Concrete columns, walls, or piers shall be in place at least 2 hours, or until the concrete begins to lose its plasticity, before placing concrete for beams, girders, or slabs thereon. In walls having door or window openings, lifts shall terminate at the top and bottom of the opening. Other lifts shall terminate at such levels as to conform to structural requirements or architectural details. Where horizontal construction joints in walls or columns are required, a strip of 1 inchsquare-edge lumber, bevelled and oiled to facilitate removal, shall be tacked to the inside of the forms at the construction joint. Concrete shall be placed to a point 1 inch above the underside of the strip. The strip shall be removed 1 hour after the concrete has been placed, and any irregularities in the joint line shall be leveled off with a wood float, and all laitance shall be removed. Prior to placing additional concrete, horizontal construction joints shall be prepared as specified in paragraph Previously Placed Concrete.

3.7.2 Contraction Joints in Slabs on Grade

Contraction joints shall be located and detailed as shown on the drawings.

Contraction Joints shall be produced by forming a weakened plane in the concrete slab by use of rigid inserts impressed in the concrete during placing operations use of snap-out plastic joint forming inserts or sawing a continuous slot with a concrete saw. Regardless of method used to produce the weakened plane, it shall be 1/4 the depth of the slab thickness and between 1/8 and 3/16 inch wide. For saw-cut joints, cutting shall be timed properly with the set of the concrete. Cutting shall be started as soon as the concrete has hardened sufficiently to prevent ravelling of the edges of the saw cut. Cutting shall be completed before shrinkage stresses become sufficient to produce cracking. Reservoir for joint sealant shall be formed as previously specified.

3.7.3 Expansion Joints

Installation of expansion joints and sealing of these joints shall conform to the requirements of Section 03150 EXPANSION JOINTS, CONTRACTION JOINTS, AND WATERSTOPS and Section 07900 JOINT SEALING.

3.7.4 Waterstops

Waterstops shall be installed in conformance with the locations and details shown on the drawings using materials and procedures specified in Section 03150 EXPANSION JOINTS, CONTRACTION JOINTS, AND WATERSTOPS.

3.7.5 Dowels and Tie Bars

Dowels and tie bars shall be installed at the locations shown on the drawings and to the details shown, using materials and procedures specified in Section 03200 CONCRETE REINFORCEMENT and herein. Conventional smooth "paving" dowels shall be installed in slabs using approved methods to hold the dowel in place during concreting within a maximum alignment tolerance of 1/8 inch in 12 inches. "Structural" type deformed bar dowels, or tie bars, shall be installed to meet the specified tolerances. Care shall be taken during placing adjacent to and around dowels and tie bars to ensure there is no displacement of the dowel or tie bar and that the concrete completely embeds the dowel or tie bar and is thoroughly consolidated.

3.8 FINISHING FORMED SURFACES

Forms, form materials, and form construction are specified in Section 03100 STRUCTURAL CONCRETE FORMWORK. Finishing of formed surfaces shall be as specified herein. Unless another type of architectural or special finish is specified, surfaces shall be left with the texture imparted by the forms except that defective surfaces shall be repaired. Unless painting of surfaces is required, uniform color of the concrete shall be maintained by use of only one mixture without changes in materials or proportions for any structure or portion of structure that requires a Class A or B finish. Except for major defects, as defined hereinafter, surface defects shall be repaired as specified herein within 24 hours after forms are removed. Repairs of the so-called "plaster-type" will not be permitted in any location. Tolerances of formed surfaces shall conform to the requirements of ACI 117/117R. These tolerances apply to the finished concrete surface, not to the forms themselves; forms shall be set true to line and grade. Form tie holes requiring repair and other defects whose depth is at least as great as their surface diameter shall be repaired as specified in paragraph Damp-Pack Mortar Repair. Defects whose surface diameter is greater than their depth shall be repaired as specified in paragraph Repair of Major Defects. Repairs shall be finished flush with adjacent surfaces and with the same surface texture. The cement used for all repairs shall

be a blend of job cement with white cement proportioned so that the final color after curing and aging will be the same as the adjacent concrete. Concrete with excessive honeycomb, or other defects which affect the strength of the member, will be rejected. Repairs shall be demonstrated to be acceptable and free from cracks or loose or drummy areas at the completion of the contract and, for Class A and B Finishes, shall be inconspicuous. Repairs not meeting these requirements will be rejected and shall be replaced.

3.8.1 Class A Finish and Class B Finish

Class A finish is required on exposed concrete except in crawl space and mechanical rooms which shall be Class B. Fins, ravelings, and loose material shall be removed, all surface defects over 1/2 inch in diameter or more than 1/2 inch deep, shall be repaired and, except as otherwise indicated or as specified in Section 03100 STRUCTURAL CONCRETE FORMWORK, holes left by removal of form ties shall be reamed and filled. Defects more than 1/2 inch in diameter shall be cut back to sound concrete, but in all cases at least 1 inch deep. The Contractor shall prepare a sample panel for approval before commencing repair, showing that the surface texture and color match will be attained. Metal tools shall not be used to finish repairs in Class A surfaces.

3.8.2 Class C and Class D Finish

Class C finish is required on concealed surfaces. Class D finish is required on foundations. Fins, ravelings, and loose material shall be removed, and, except as otherwise indicated or as specified in Section 03100 STRUCTURAL CONCRETE FORMWORK, holes left by removal of form ties shall be reamed and filled. Honeycomb and other defects more than 1/2 inch deep or more than 2 inches in diameter shall be repaired. Defects more than 2 inches in diameter shall be cut back to sound concrete, but in all cases at least 1 inch deep.

3.8.3 Architectural Finishes

Architectural concrete finishes shall match existing finishes in color and texture.

3.9 REPAIRS

3.9.1 Damp-Pack Mortar Repair

Form tie holes requiring repair and other defects whose depth is at least as great as their surface diameter but not over 4 inches shall be repaired by the damp-pack mortar method. Form tie holes shall be reamed and other similar defects shall be cut out to sound concrete. The void shall then be thoroughly cleaned, thoroughly wetted, brush-coated with a thin coat of neat cement grout and filled with mortar. Mortar shall be a stiff mix of 1 part portland cement to 2 parts fine aggregate passing the No. 16 mesh sieve, and minimum amount of water. Only sufficient water shall be used to produce a mortar which, when used, will stick together on being molded into a ball by a slight pressure of the hands and will not exude water but will leave the hands damp. Mortar shall be mixed and allowed to stand for 30 to 45 minutes before use with remixing performed immediately prior to use. Mortar shall be thoroughly tamped in place in thin layers using a hammer and hardwood block. Holes passing entirely through walls shall be completely filled from the inside face by forcing mortar through to the outside face. All holes shall be packed full. Damp-pack repairs shall be

moist cured for at least 48 hours.

3.9.2 Repair of Major Defects

Major defects will be considered to be those more than 1/2 inch deep or, for Class A and B finishes, more than 1/2 inch in diameter and, for Class C and D finishes, more than 2 inches in diameter. Also included are any defects of any kind whose depth is over 4 inches or whose surface diameter is greater than their depth. Major defects shall be repaired as specified below.

3.9.2.1 Surface Application of Mortar Repair

Defective concrete shall be removed, and removal shall extend into completely sound concrete. Approved equipment and procedures which will not cause cracking or microcracking of the sound concrete shall be used. If reinforcement is encountered, concrete shall be removed so as to expose the reinforcement for at least 2 inches on all sides. All such defective areas greater than 12 square inches shall be outlined by saw cuts at least 1 inch deep. Defective areas less than 12 square inches shall be outlined by a 1 inch deep cut with a core drill in lieu of sawing. All saw cuts shall be straight lines in a rectangular pattern in line with the formwork panels. After concrete removal, the surface shall be thoroughly cleaned by high pressure washing to remove all loose material. Surfaces shall be kept continually saturated for the first 12 of the 24 hours immediately before placing mortar and shall be damp but not wet at the time of commencing mortar placement. The Contractor, at his option, may use either hand-placed mortar or mortar placed with a mortar gun. If hand-placed mortar is used, the edges of the cut shall be perpendicular to the surface of the concrete. The prepared area shall be brush-coated with a thin coat of neat cement grout. The repair shall then be made using a stiff mortar, preshrunk by allowing the mixed mortar to stand for 30 to 45 minutes and then remixed, thoroughly tamped into place in thin layers. If hand-placed mortar is used, the Contractor shall test each repair area for drumminess by firm tapping with a hammer and shall inspect for cracks, both in the presence of the Contracting Officer's representative, immediately before completion of the contract, and shall replace any showing drumminess or cracking. If mortar placed with a mortar gun is used, the gun shall be a small compressed air-operated gun to which the mortar is slowly hand fed and which applies the mortar to the surface as a high-pressure stream, as approved. Repairs made using shotcrete equipment will not be accepted. The mortar used shall be the same mortar as specified for damp-pack mortar repair. If gun-placed mortar is used, the edges of the cut shall be beveled toward the center at a slope of 1:1. All surface applied mortar repairs shall be continuously moist cured for at least 7 days. Moist curing shall consist of several layers of saturated burlap applied to the surface immediately after placement is complete and covered with polyethylene sheeting, all held closely in place by a sheet of plywood or similar material rigidly braced against it. Burlap shall be kept continually wet.

3.9.2.2 Repair of Deep and Large Defects

Deep and large defects will be those that are more than 6 inches deep and also have an average diameter at the surface more than 18 inches or that are otherwise so identified by the Project Office. Such defects shall be repaired as specified herein or directed, except that defects which affect the strength of the structure shall not be repaired and that portion of the structure shall be completely removed and replaced. Deep and large defects

shall be repaired by procedures approved in advance including forming and placing special concrete using applied pressure during hardening. Preparation of the repair area shall be as specified for surface application of mortar. In addition, the top edge (surface) of the repair area shall be sloped at approximately 20 degrees from the horizontal, upward toward the side from which concrete will be placed. The special concrete shall be a concrete mixture with low water content and low slump, and shall be allowed to age 30 to 60 minutes before use. Concrete containing a specified expanding admixture may be used in lieu of the above mixture; the paste portion of such concrete mixture shall be designed to have an expansion between 2.0 and 4.0 percent when tested in accordance with ASTM C 940. A full width "chimney" shall be provided at the top of the form on the placing side to ensure filling to the top of the opening. A pressure cap shall be used on the concrete in the chimney with simultaneous tightening and revibrating the form during hardening to ensure a tight fit for the repair. The form shall be removed after 24 hours and immediately the chimney shall be carefully chipped away to avoid breaking concrete out of the repair; the surface of the repair concrete shall be dressed as required.

3.9.3 Resinous and Latex Material Repair

In lieu of the portland cement bonding coats specified above, an epoxy resin or a latex bonding agent may be used.

3.10 FINISHING UNFORMED SURFACES

The finish of all unformed surfaces shall meet the requirements of paragraph Tolerances in PART 1, when tested as specified herein.

3.10.1 General

The ambient temperature of spaces adjacent to unformed surfaces being finished and of the base on which concrete will be placed shall be not less than 50 degrees F. In hot weather all requirements of paragraphs Hot Weather Requirements and Prevention of Plastic Shrinkage Cracking shall be met. Unformed surfaces that are not to be covered by additional concrete or backfill shall have a float finish, with additional finishing as specified below, and shall be true to the elevation shown on the drawings. Surfaces to receive additional concrete or backfill shall be brought to the elevation shown on the drawings, properly consolidated, and left true and regular. Unless otherwise shown on the drawings, exterior surfaces shall be sloped for drainage, as directed. Where drains are provided, interior floors shall be evenly sloped to the drains. Joints shall be carefully made with a jointing or edging tool. The finished surfaces shall be protected from stains or abrasions. Grate tampers or "jitterbugs" shall not be used for any surfaces. The dusting of surfaces with dry cement or other materials or the addition of any water during finishing shall not be permitted. If bleedwater is present prior to finishing, the excess water shall be carefully dragged off or removed by absorption with porous materials such as burlap. During finishing operations, extreme care shall be taken to prevent over finishing or working water into the surface; this can cause "crazing" (surface shrinkage cracks which appear after hardening) of the surface. Any slabs with surfaces which exhibit significant crazing shall be removed and replaced. During finishing operations, surfaces shall be checked with a 10 foot straightedge, applied in both directions at regular intervals while the concrete is still plastic, to detect high or low areas.

3.10.2 Rough Slab Finish

As a first finishing operation for unformed surfaces and as final finish for slabs to receive mortar setting beds, the surface shall receive a rough slab finish. The concrete shall be uniformly placed across the slab area, consolidated as previously specified, and then screeded with straightedge strikeoffs immediately after consolidation to bring the surface to the required finish level with no coarse aggregate visible. Side forms and screed rails shall be provided, rigidly supported, and set to exact line and grade. Allowable tolerances for finished surfaces apply only to the hardened concrete, not to forms or screed rails. Forms and screed rails shall be set true to line and grade. "Wet screeds" shall not be used.

3.10.3 Floated Finish

Slabs to receive more than a rough slab finish shall next be given a wood float finish. The screeding shall be followed immediately by darbying or bull floating before bleeding water is present, to bring the surface to a true, even plane. Then, after the concrete has stiffened so that it will withstand a man's weight without imprint of more than 1/4 inch and the water sheen has disappeared, it shall be floated to a true and even plane free of ridges. Floating shall be performed by use of suitable hand floats or power driven equipment. Sufficient pressure shall be used on the floats to bring a film of moisture to the surface. Hand floats shall be made of wood, magnesium, or aluminum. Lightweight concrete or concrete that exhibits stickiness shall be floated with a magnesium float. Care shall be taken to prevent over-finishing or incorporating water into the surface.

3.10.4 Troweled Finish

After floating is complete and after the surface moisture has disappeared, unformed surfaces shall be steel-troweled to a smooth, even, dense finish, free from blemishes including trowel marks. In lieu of hand finishing, an approved power finishing machine may be used in accordance with the directions of the machine manufacturer. Additional trowelings shall be performed, either by hand or machine until the surface has been troweled 2 times, with waiting period between each. Care shall be taken to prevent blistering and if such occurs, troweling shall immediately be stopped and operations and surfaces corrected. A final hard steel troweling shall be done by hand, with the trowel tipped, and using hard pressure, when the surface is at a point that the trowel will produce a ringing sound. The finished surface shall be thoroughly consolidated and shall be essentially free of trowel marks and be uniform in texture and appearance. The concrete mixture used for troweled finished areas shall be adjusted, if necessary, in order to provide sufficient fines (cementitious material and fine sand) to finish properly.

3.10.5 Non-Slip Finish

Non-slip floors shall be constructed in accordance with the following subparagraph.

3.10.5.1 Broomed

After floating, the surface shall be lightly steel troweled, and then carefully scored by pulling a hair push-type broom across the surface. Brooming shall be transverse to traffic or at right angles to the slope of the slab. After the end of the curing period, the surface shall be vigorously broomed with a coarse fiber broom to remove all loose or

semi-detached particles.

3.11 EXTERIOR SLAB AND RELATED ITEMS

3.11.1 Pits and Trenches

Pits and trenches shall be constructed as indicated on the drawings. Bottoms and walls shall be placed monolithically or waterstops and keys, shall be provided as approved.

3.12 CURING AND PROTECTION

3.12.1 General

Concrete shall be cured by an approved method for the period of time given below:

Concrete with Type III cement	3 days
All other concrete	7 days

Immediately after placement, concrete shall be protected from premature drying, extremes in temperatures, rapid temperature change, mechanical injury and damage from rain and flowing water for the duration of the curing period. Air and forms in contact with concrete shall be maintained at a temperature above 50 degrees F for the first 3 days and at a temperature above 32 degrees F for the remainder of the specified curing period. Exhaust fumes from combustion heating units shall be vented to the outside of the enclosure, and heaters and ducts shall be placed and directed so as not to cause areas of overheating and drying of concrete surfaces or to create fire hazards. Materials and equipment needed for adequate curing and protection shall be available and at the site prior to placing concrete. No fire or excessive heat, including welding, shall be permitted near or in direct contact with the concrete at any time. Except as otherwise permitted by paragraph Membrane Forming Curing Compounds, moist curing shall be provided for any areas to receive floor hardener, any paint or other applied coating, or to which other concrete is to be bonded. Concrete containing silica fume shall be initially cured by fog misting during finishing, followed immediately by continuous moist curing. Except for plastic coated burlap, impervious sheeting alone shall not be used for curing.

3.12.2 Moist Curing

Concrete to be moist-cured shall be maintained continuously wet for the entire curing period, commencing immediately after finishing. If water or curing materials used stain or discolor concrete surfaces which are to be permanently exposed, the concrete surfaces shall be cleaned as approved. When wooden forms are left in place during curing, they shall be kept wet at all times. If steel forms are used in hot weather, nonsupporting vertical forms shall be broken loose from the concrete soon after the concrete hardens and curing water continually applied in this void. If the forms are removed before the end of the curing period, curing shall be carried out as on unformed surfaces, using suitable materials. Surfaces shall be cured by ponding, by continuous sprinkling, by continuously saturated burlap or cotton mats, or by continuously saturated plastic coated burlap. Burlap and mats shall be clean and free from any contamination and shall be completely saturated before being placed on the concrete. The Contractor shall have an approved work system to ensure that moist curing is continuous 24 hours per day.

3.12.3 Membrane Forming Curing Compounds

Membrane curing shall not be used on surfaces that are to receive any subsequent treatment depending on adhesion or bonding to the concrete, including surfaces to which a smooth finish is to be applied or other concrete to be bonded. However, a styrene acrylate or chlorinated rubber compound meeting ASTM C 309, Class B requirements, may be used for surfaces which are to be painted or are to receive bituminous roofing or waterproofing, or floors that are to receive adhesive applications of resilient flooring. The curing compound selected shall be compatible with any subsequent paint, roofing, waterproofing or flooring specified. Membrane curing compound shall not be used on surfaces that are maintained at curing temperatures with free steam. Curing compound shall be applied to formed surfaces immediately after the forms are removed and prior to any patching or other surface treatment except the cleaning of loose sand, mortar, and debris from the surface. All surfaces shall be thoroughly moistened with water. Curing compound shall be applied to slab surfaces as soon as the bleeding water has disappeared, with the tops of joints being temporarily sealed to prevent entry of the compound and to prevent moisture loss during the curing period. The curing compound shall be applied in a two-coat continuous operation by approved motorized power-spraying equipment operating at a minimum pressure of 75 psi, at a uniform coverage of not more than 400 square feet per gallon for each coat, and the second coat shall be applied perpendicular to the first coat. Concrete surfaces which have been subjected to rainfall within 3 hours after curing compound has been applied shall be resprayed by the method and at the coverage specified. Surfaces on which clear compound is used shall be shaded from direct rays of the sun for the first 3 days. Surfaces coated with curing compound shall be kept free of foot and vehicular traffic, and from other sources of abrasion and contamination during the curing period.

3.12.4 Impervious Sheeting

The following concrete surfaces may be cured using impervious sheets: Basement Slabs. However, except for plastic coated burlap, impervious sheeting alone shall not be used for curing. Impervious-sheet curing shall only be used on horizontal or nearly horizontal surfaces. Surfaces shall be thoroughly wetted and be completely covered with the sheeting. Sheeting shall be at least 18 inches wider than the concrete surface to be covered. Covering shall be laid with light-colored side up. Covering shall be lapped not less than 12 inches and securely weighted down or shall be lapped not less than 4 inches and taped to form a continuous cover with completely closed joints. The sheet shall be weighted to prevent displacement so that it remains in contact with the concrete during the specified length of curing. Coverings shall be folded down over exposed edges of slabs and secured by approved means. Sheets shall be immediately repaired or replaced if tears or holes appear during the curing period.

3.12.5 Cold Weather Curing and Protection

When the daily ambient low temperature is less than 32 degrees F the temperature of the concrete shall be maintained above 40 degrees F for the first seven days after placing. During the period of protection removal, the air temperature adjacent to the concrete surfaces shall be controlled so that concrete near the surface will not be subjected to a temperature differential of more than 25 degrees F as determined by suitable temperature measuring devices furnished by the Government, as required, and installed adjacent to the concrete surface and 2 inches inside the surface

of the concrete. The installation of the thermometers shall be made by the Contractor as directed.

3.13 SETTING BASE PLATES AND BEARING PLATES

After being properly positioned, column base plates, bearing plates for beams and similar structural members, and machinery and equipment base plates shall be set to the proper line and elevation with damp-pack bedding mortar, except where nonshrink grout is indicated. The thickness of the mortar or grout shall be approximately 1/24 the width of the plate, but not less than 3/4 inch. Concrete and metal surfaces in contact with grout shall be clean and free of oil and grease, and concrete surfaces in contact with grout shall be damp and free of laitance when grout is placed.

3.13.1 Damp-Pack Bedding Mortar

Damp-pack bedding mortar shall consist of 1 part cement and 2-1/2 parts fine aggregate having water content such that a mass of mortar tightly squeezed in the hand will retain its shape but will crumble when disturbed. The space between the top of the concrete and bottom of the bearing plate or base shall be packed with the bedding mortar by tamping or ramming with a bar or rod until it is completely filled.

3.13.2 Nonshrink Grout

Nonshrink grout shall be a ready-mixed material requiring only the addition of water. Water content shall be the minimum that will provide a flowable mixture and completely fill the space to be grouted without segregation, bleeding, or reduction of strength.

3.13.2.1 Mixing and Placing of Nonshrink Grout

Mixing and placing shall be in conformance with the material manufacturer's instructions and as specified therein. Ingredients shall be thoroughly dry-mixed before adding water. After adding water, the batch shall be mixed for 3 minutes. Batches shall be of size to allow continuous placement of freshly mixed grout. Grout not used within 30 minutes after mixing shall be discarded. The space between the top of the concrete or machinery-bearing surface and the plate shall be filled solid with the grout. Forms shall be of wood or other equally suitable material for completely retaining the grout on all sides and on top and shall be removed after the grout has set. The placed grout shall be carefully worked by rodding or other means to eliminate voids; however, overworking and breakdown of the initial set shall be avoided. Grout shall not be retempered or subjected to vibration from any source. Where clearances are unusually small, placement shall be under pressure with a grout pump. Temperature of the grout, and of surfaces receiving the grout, shall be maintained at 65 to 85 degrees F until after setting.

3.13.2.2 Treatment of Exposed Surfaces

For metal-oxidizing nonshrink grout, exposed surfaces shall be cut back 1 inch and immediately covered with a parge coat of mortar consisting of 1 part portland cement and 2-1/2 parts fine aggregate by weight, with sufficient water to make a plastic mixture. The parge coat shall have a smooth finish. For other mortars or grouts, exposed surfaces shall have a smooth-dense finish and be left untreated. Curing shall comply with paragraph CURING AND PROTECTION.

3.14 TESTING AND INSPECTION FOR CONTRACTOR QUALITY CONTROL

The Contractor shall perform the inspection and tests described below and, based upon the results of these inspections and tests, shall take the action required and shall submit specified reports. When, in the opinion of the Contracting Officer, the concreting operation is out of control, concrete placement shall cease and the operation shall be corrected. The laboratory performing the tests shall be onsite and shall conform with ASTM C 1077. Materials may be subjected to check testing by the Government from samples obtained at the manufacturer, at transfer points, or at the project site. The Government will inspect the laboratory, equipment, and test procedures prior to start of concreting operations and at least once per month thereafter for conformance with ASTM C 1077.

3.14.1 Grading and Corrective Action

3.14.1.1 Fine Aggregate

At least once during each shift when the concrete plant is operating, there shall be one sieve analysis and fineness modulus determination in accordance with ASTM C 136 and COE CRD-C 104 for the fine aggregate or for each fine aggregate if it is batched in more than one size or classification. The location at which samples are taken may be selected by the Contractor as the most advantageous for control. However, the Contractor is responsible for delivering fine aggregate to the mixer within specification limits. When the amount passing on any sieve is outside the specification limits, the fine aggregate shall be immediately resampled and retested. If there is another failure on any sieve, the fact shall immediately reported to the Contracting Officer, concreting shall be stopped, and immediate steps taken to correct the grading.

3.14.1.2 Coarse Aggregate

At least once during each shift in which the concrete plant is operating, there shall be a sieve analysis in accordance with ASTM C 136 for each size of coarse aggregate. The location at which samples are taken may be selected by the Contractor as the most advantageous for production control. However, the Contractor shall be responsible for delivering the aggregate to the mixer within specification limits. A test record of samples of aggregate taken at the same locations shall show the results of the current test as well as the average results of the five most recent tests including the current test. The Contractor may adopt limits for control coarser than the specification limits for samples taken other than as delivered to the mixer to allow for degradation during handling. When the amount passing any sieve is outside the specification limits, the coarse aggregate shall be immediately resampled and retested. If the second sample fails on any sieve, that fact shall be reported to the Contracting Officer. Where two consecutive averages of 5 tests are outside specification limits, the operation shall be considered out of control and shall be reported to the Contracting Officer. Concreting shall be stopped and immediate steps shall be taken to correct the grading.

3.14.2 Quality of Aggregates

Thirty days prior to the start of concrete placement, the Contractor shall perform all tests for aggregate quality required by ASTM C 33. In addition, after the start of concrete placement, the Contractor shall perform tests for aggregate quality at least every three months, and when the source of aggregate or aggregate quality changes. Samples tested after

the start of concrete placement shall be taken immediately prior to entering the concrete mixer.

3.14.3 Scales, Batching and Recording

The accuracy of the scales shall be checked by test weights prior to start of concrete operations and at least once every three months. Such tests shall also be made as directed whenever there are variations in properties of the fresh concrete that could result from batching errors. Once a week the accuracy of each batching and recording device shall be checked during a weighing operation by noting and recording the required weight, recorded weight, and the actual weight batched. At the same time, the Contractor shall test and ensure that the devices for dispensing admixtures are operating properly and accurately. When either the weighing accuracy or batching accuracy does not comply with specification requirements, the plant shall not be operated until necessary adjustments or repairs have been made. Discrepancies in recording accuracies shall be corrected immediately.

3.14.4 Batch-Plant Control

The measurement of concrete materials including cementitious materials, each size of aggregate, water, and admixtures shall be continuously controlled. The aggregate weights and amount of added water shall be adjusted as necessary to compensate for free moisture in the aggregates. The amount of air-entraining agent shall be adjusted to control air content within specified limits. A report shall be prepared indicating type and source of cement used, type and source of pozzolan or slag used, amount and source of admixtures used, aggregate source, the required aggregate and water weights per cubic yard, amount of water as free moisture in each size of aggregate, and the batch aggregate and water weights per cubic yard for each class of concrete batched during each day's plant operation.

3.14.5 Concrete Mixture

a. Air Content Testing. Air content tests shall be made when test specimens are fabricated. In addition, at least two tests for air content shall be made on randomly selected batches of each separate concrete mixture produced during each 8-hour period of concrete production. Additional tests shall be made when excessive variation in workability is reported by the placing foreman or Government inspector. Tests shall be made in accordance with ASTM C 231 for normal weight concrete and ASTM C 173 for lightweight concrete. Test results shall be plotted on control charts which shall at all times be readily available to the Government and shall be submitted weekly. Copies of the current control charts shall be kept in the field by testing crews and results plotted as tests are made. When a single test result reaches either the upper or lower action limit, a second test shall immediately be made. The results of the two tests shall be averaged and this average used as the air content of the batch to plot on both the air content and the control chart for range, and for determining need for any remedial action. The result of each test, or average as noted in the previous sentence, shall be plotted on a separate control chart for each mixture on which an "average line" is set at the midpoint of the specified air content range from paragraph Air Entrainment. An upper warning limit and a lower warning limit line shall be set 1.0 percentage point above and below the average line, respectively. An upper action limit

and a lower action limit line shall be set 1.5 percentage points above and below the average line, respectively. The range between each two consecutive tests shall be plotted on a secondary control chart for range where an upper warning limit is set at 2.0 percentage points and an upper action limit is set at 3.0 percentage points. Samples for air content may be taken at the mixer, however, the Contractor is responsible for delivering the concrete to the placement site at the stipulated air content. If the Contractor's materials or transportation methods cause air content loss between the mixer and the placement, correlation samples shall be taken at the placement site as required by the Contracting Officer, and the air content at the mixer controlled as directed.

b. Air Content Corrective Action. Whenever points on the control chart for percent air reach either warning limit, an adjustment shall immediately be made in the amount of air-entraining admixture batched. As soon as practical after each adjustment, another test shall be made to verify the result of the adjustment. Whenever a point on the secondary control chart for range reaches the warning limit, the admixture dispenser shall be recalibrated to ensure that it is operating accurately and with good reproducibility. Whenever a point on either control chart reaches an action limit line, the air content shall be considered out of control and the concreting operation shall immediately be halted until the air content is under control. Additional air content tests shall be made when concreting is restarted.

c. Slump Testing. In addition to slump tests which shall be made when test specimens are fabricated, at least four slump tests shall be made on randomly selected batches in accordance with ASTM C 143 for each separate concrete mixture produced during each 8-hour or less period of concrete production each day. Also, additional tests shall be made when excessive variation in workability is reported by the placing foreman or Government inspector. Test results shall be plotted on control charts which shall at all times be readily available to the Government and shall be submitted weekly. Copies of the current control charts shall be kept in the field by testing crews and results plotted as tests are made. When a single slump test reaches or goes beyond either the upper or lower action limit, a second test shall immediately be made. The results of the two tests shall be averaged and this average used as the slump of the batch to plot on both the control charts for slump and the chart for range, and for determining need for any remedial action. Limits shall be set on separate control charts for slump for each type of mixture. The upper warning limit shall be set at 1/2 inch below the maximum allowable slump specified in paragraph Slump in PART 1 for each type of concrete and an upper action limit line and lower action limit line shall be set at the maximum and minimum allowable slumps, respectively, as specified in the same paragraph. The range between each consecutive slump test for each type of mixture shall be plotted on a single control chart for range on which an upper action limit is set at 2 inches. Samples for slump shall be taken at the mixer. However, the Contractor is responsible for delivering the concrete to the placement site at the stipulated slump. If the Contractor's materials or transportation methods cause slump loss between the mixer and the placement, correlation samples shall be taken at the placement site as required by the

Contracting Officer, and the slump at the mixer controlled as directed.

d. Slump Corrective Action. Whenever points on the control charts for slump reach the upper warning limit, an adjustment shall immediately be made in the batch weights of water and fine aggregate. The adjustments are to be made so that the total water content does not exceed that amount allowed by the maximum w/c ratio specified, based on aggregates which are in a saturated surface dry condition. When a single slump reaches the upper or lower action limit, no further concrete shall be delivered to the placing site until proper adjustments have been made. Immediately after each adjustment, another test shall be made to verify the correctness of the adjustment. Whenever two consecutive individual slump tests, made during a period when there was no adjustment of batch weights, produce a point on the control chart for range at or above the upper action limit, the concreting operation shall immediately be halted, and the Contractor shall take appropriate steps to bring the slump under control. Additional slump tests shall be made as directed.

e. Temperature. The temperature of the concrete shall be measured when compressive strength specimens are fabricated. Measurement shall be in accordance with ASTM C 1064. The temperature shall be reported along with the compressive strength data.

f. Strength Specimens. At least one set of test specimens shall be made, for compressive or flexural strength as appropriate, on each different concrete mixture placed during the day for each 500 cubic yards or portion thereof of that concrete mixture placed each day. Additional sets of test specimens shall be made, as directed by the Contracting Officer, when the mixture proportions are changed or when low strengths have been detected. A truly random (not haphazard) sampling plan shall be developed by the Contractor and approved by the Contracting Officer prior to the start of construction. The plan shall assure that sampling is done in a completely random and unbiased manner. A set of test specimens for concrete with a 28-day specified strength per paragraph Strength Requirements in PART 1 shall consist of four specimens, two to be tested at 7 days and two at 28 days. A set of test specimens for concrete with a 90-day strength per the same paragraph shall consist of six specimens, two tested at 7 days, two at 28 days, and two at 90 days. Test specimens shall be molded and cured in accordance with ASTM C 31/C 31M and tested in accordance with ASTM C 39 for test cylinders and ASTM C 78 for test beams. Results of all strength tests shall be reported immediately to the Contracting Officer. Quality control charts shall be kept for individual strength "tests", ("test" as defined in paragraph Strength Requirements in PART 1) moving average of last 3 "tests" for strength, and moving average for range for the last 3 "tests" for each mixture. The charts shall be similar to those found in ACI 214.3R.

3.14.6 Inspection Before Placing

Foundations, construction joints, forms, and embedded items shall be inspected by the Contractor in sufficient time prior to each concrete placement in order to certify to the Contracting Officer that they are ready to receive concrete. The results of each inspection shall be

reported in writing.

3.14.7 Placing

The placing foreman shall supervise placing operations, shall determine that the correct quality of concrete or grout is placed in each location as specified and as directed by the Contracting Officer, and shall be responsible for measuring and recording concrete temperatures and ambient temperature hourly during placing operations, weather conditions, time of placement, volume placed, and method of placement. The placing foreman shall not permit batching and placing to begin until it has been verified that an adequate number of vibrators in working order and with competent operators are available. Placing shall not be continued if any pile of concrete is inadequately consolidated. If any batch of concrete fails to meet the temperature requirements, immediate steps shall be taken to improve temperature controls.

3.14.8 Vibrators

The frequency and amplitude of each vibrator shall be determined in accordance with COE CRD-C 521 prior to initial use and at least once a month when concrete is being placed. Additional tests shall be made as directed when a vibrator does not appear to be adequately consolidating the concrete. The frequency shall be determined while the vibrator is operating in concrete with the tachometer being held against the upper end of the vibrator head while almost submerged and just before the vibrator is withdrawn from the concrete. The amplitude shall be determined with the head vibrating in air. Two measurements shall be taken, one near the tip and another near the upper end of the vibrator head, and these results averaged. The make, model, type, and size of the vibrator and frequency and amplitude results shall be reported in writing. Any vibrator not meeting the requirements of paragraph Consolidation, shall be immediately removed from service and repaired or replaced.

3.14.9 Curing Inspection

a. Moist Curing Inspections. At least once each shift, and not less than twice per day on both work and non-work days, an inspection shall be made of all areas subject to moist curing. The surface moisture condition shall be noted and recorded.

b. Moist Curing Corrective Action. When a daily inspection report lists an area of inadequate curing, immediate corrective action shall be taken, and the required curing period for those areas shall be extended by 1 day.

c. Membrane Curing Inspection. No curing compound shall be applied until the Contractor has verified that the compound is properly mixed and ready for spraying. At the end of each operation, the Contractor shall estimate the quantity of compound used by measurement of the container and the area of concrete surface covered, shall compute the rate of coverage in square feet per gallon, and shall note whether or not coverage is uniform.

d. Membrane Curing Corrective Action. When the coverage rate of the curing compound is less than that specified or when the coverage is not uniform, the entire surface shall be sprayed again.

e. Sheet Curing Inspection. At least once each shift and once per

day on non-work days, an inspection shall be made of all areas being cured using impervious sheets. The condition of the covering and the tightness of the laps and tapes shall be noted and recorded.

f. Sheet Curing Corrective Action. When a daily inspection report lists any tears, holes, or laps or joints that are not completely closed, the tears and holes shall promptly be repaired or the sheets replaced, the joints closed, and the required curing period for those areas shall be extended by 1 day.

3.14.10 Cold-Weather Protection

At least once each shift and once per day on non-work days, an inspection shall be made of all areas subject to cold-weather protection. Any deficiencies shall be noted, corrected, and reported.

3.14.11 Mixer Uniformity

a. Stationary Mixers. Prior to the start of concrete placing and once every 6 months when concrete is being placed, or once for every 75,000 cubic yards of concrete placed, whichever results in the shortest time interval, uniformity of concrete mixing shall be determined in accordance with ASTM C 94.

b. Truck Mixers. Prior to the start of concrete placing and at least once every 6 months when concrete is being placed, uniformity of concrete mixing shall be determined in accordance with ASTM C 94. The truck mixers shall be selected randomly for testing. When satisfactory performance is found in one truck mixer, the performance of mixers of substantially the same design and condition of the blades may be regarded as satisfactory.

c. Mixer Uniformity Corrective Action. When a mixer fails to meet mixer uniformity requirements, either the mixing time shall be increased, batching sequence changed, batch size reduced, or adjustments shall be made to the mixer until compliance is achieved.

3.14.12 Reports

All results of tests or inspections conducted shall be reported informally as they are completed and in writing daily. A weekly report shall be prepared for the updating of control charts covering the entire period from the start of the construction season through the current week. During periods of cold-weather protection, reports of pertinent temperatures shall be made daily. These requirements do not relieve the Contractor of the obligation to report certain failures immediately as required in preceding paragraphs. Such reports of failures and the action taken shall be confirmed in writing in the routine reports. The Contracting Officer has the right to examine all contractor quality control records.

-- End of Section --

SECTION TABLE OF CONTENTS

DIVISION 03 - CONCRETE

SECTION 03371

SHOTCRETE

PART 1 GENERAL

1.1 REFERENCES
1.2 UNIT PRICES
1.2.1 Measurement
1.2.2 Payment
1.3 QUALITY ASSURANCE
1.4 MIXTURE PROPORTIONS
1.5 EVALUATION AND ACCEPTANCE
1.5.1 Compressive Strength
1.6 SUBMITTALS
1.7 QUALIFICATIONS
1.8 PRECONSTRUCTION TEST PANELS

PART 2 PRODUCTS

2.1 MATERIALS
2.1.1 Cementitious Materials
2.1.1.1 Portland Cement
2.1.2 Aggregates
2.1.3 Water
2.1.4 Admixtures
2.1.4.1 Accelerators
2.1.5 Curing Materials
2.1.5.1 Impervious Sheet Materials
2.1.5.2 Membrane-Forming Curing Compound

PART 3 EXECUTION

3.1 PRODUCTION OF SHOTCRETE
3.1.1 Dry Mix Process
3.1.1.1 Batching and Mixing
3.1.1.2 Delivery Equipment
3.1.2 Wet Mix Process
3.1.2.1 Batching and Mixing
3.1.2.2 Delivery Equipment
3.1.2.3 Air Content
3.1.3 Air Supply
3.2 PREPARATION OF SURFACES
3.2.1 Earth
3.2.2 Existing Concrete
3.2.3 Rock
3.2.4 Shotcrete
3.2.5 Construction Joints
3.3 PLACEMENT OF SHOTCRETE
3.3.1 General

3.3.2 Placement Techniques
3.3.2.1 Placement Control
3.3.2.2 Corners
3.3.3 Placement Around Reinforcement
3.3.4 Cover of Reinforcement
3.3.5 Placement Precautions
3.4 REPAIR OF DEFECTS
3.4.1 Defects
3.4.1.1 Repairs
3.4.1.2 Minor Patching
3.4.2 Core Holes
3.5 FINISHING
3.5.1 Natural Gun Finish
3.5.2 Cutting Screed
3.5.3 Flash Coat
3.5.4 Float and Trowel Finish
3.5.5 Fiber-Reinforced Shotcrete
3.6 CURING AND PROTECTION
3.6.1 Initial Curing
3.6.2 Final Curing
3.6.3 Formed Surface
3.6.4 Duration of Curing
3.6.5 Temperature Considerations
3.7 TESTS
3.7.1 Strength Testing
3.7.1.1 Test Panel
3.7.1.2 Test Cores
3.7.2 Aggregate Moisture
3.7.3 Grading
3.7.4 Thickness
3.7.5 Mixture Proportions
3.7.6 Preparations
3.7.7 Air Content

-- End of Section Table of Contents --

SECTION 03371

SHOTCRETE

PART 1 GENERAL

1.1 REFERENCES

The publications listed below form a part of this specification to the extent referenced. The publications are referred to in the text by basic designation only.

ACI INTERNATIONAL (ACI)

ACI 506.3R	(1991) Certification of Shotcrete Nozzlemen

AMERICAN SOCIETY FOR TESTING AND MATERIALS (ASTM)

ASTM C 33	(1993) Concrete Aggregates
ASTM C 42	(1990) Obtaining and Testing Drilled Cores and Sawed Beam of Concrete
ASTM C 94	(1994) Ready-Mixed Concrete
ASTM C 136	(1993) Sieve Analysis of Fine and Coarse Aggregates
ASTM C 150	(1995) Portland Cement
ASTM C 171	(1992) Sheet Materials for Curing Concrete
ASTM C 231	(1991b) Air Content of Freshly Mixed Concrete by the Pressure Method
ASTM C 266	(1989) Time of Setting of Hydraulic-Cement Paste by Gillmore Needles
ASTM C 309	(1993) Liquid Membrane-Forming Compounds for Curing Concrete
ASTM C 566	(1989) Total Moisture Content of Aggregate by Drying
ASTM C 685	(1994) Concrete Made by Volumetric Batching and Continuous Mixing
ASTM C 881	(1990) Epoxy-Resin-Base Bonding Systems for Concrete
ASTM C 1077	(1995a) Laboratories Testing Concrete and Concrete Aggregates for Use in Construction and Criteria for Laboratory Evaluation
ASTM C 1140	(1989) Preparing and Testing Specimens

	from Shotcrete Test Panels
ASTM C 1141	(1994) Admixtures for Shotcrete

CORPS OF ENGINEERS (COE)

COE CRD-C 400	(1963) Requirements for Water for Use in Mixing or Curing Concrete

1.2 UNIT PRICES

1.2.1 Measurement

Measurement shall be the number of linear feet of shotcrete and mesh lined ditch placed and accepted.

1.2.2 Payment

Payment for shotcrete and wire mesh will be for the particular option year Line Item _013C, "Gunite Lined (Shotcrete) with 6-inch Mesh of the Pricing Schedule.

1.3 QUALITY ASSURANCE

The Contractor shall provide facilities and labor as may be necessary for obtaining and testing representative test samples. Shotcrete shall be sampled and tested by the method given in paragraph STRENGTH TESTING.

1.4 MIXTURE PROPORTIONS

Mixture proportions and test data from prior experience within one year, if available, may be submitted for approval. If test data from experience are not available or accepted, specimens shall be made and tested from mixtures having three or more different proportions. The recommended mixture proportions, sources of materials, and all test results shall be submitted for acceptance. Mixture proportions for nonfiber-reinforced shotcrete shall be selected on the basis of compressive strength tests of cores obtained from test panels fabricated in accordance with ASTM C 1140 and having minimum dimensions of 30 by 30 by 4 inches. Cores shall be continuously moist cured until testing at 28 days age. For mixture acceptance purposes, the average compressive strength of at least three cores shall be at least equal to 1.2 times the required compressive strength specified in paragraph COMPRESSIVE STRENGTH. Mixture proportions for fiber-reinforced shotcrete shall be selected on the basis of flexural strength of 4 by 4 by 14 inch beams sawed from test panels which are fabricated in accordance with ASTM C 1140 and having minimum dimensions of 30 by 30 by 4 inches. Beams shall be continuously moist cured until testing at 28 days age. For mixture acceptance purposes, the average flexural strength of at least three beams shall be not less than the flexural strength specified in paragraph FLEXURAL STRENGTH.

1.5 EVALUATION AND ACCEPTANCE

1.5.1 Compressive Strength

Final acceptance of the shotcrete will be based on compressive strength results obtained from cores. The required compressive strength of cores shall not be less than 3000 psi at 28 days age when tested in accordance with ASTM C 42. The average compressive strength of cores taken from the

test panel, representing a shift or not more than 50 cubic yardsof shotcrete tested at 28 days of age, shall equal or exceed the required compressive strength specified with no individual core less than 85 percent of the required compressive strength. When the length of a core is less than 1.94 times the diameter, the correction factors given in ASTM C 42 will be applied to obtain the compressive strength of individual cores.

1.6 SUBMITTALS

Government approval is required for all submittals with a "GA" designation; submittals having an "FIO" designation are for information only. The following shall be submitted in accordance with Section 01330 SUBMITTAL PROCEDURES:

SD-01 Data

Mixture Proportions; GA.

The recommended mixture proportions, sources of materials, and all test results shall be submitted for approval.

SD-09 Reports

Aggregates; FIO.

Supplier's test reports for aggregates showing the materials meet the requirements of this specification.

Accelerator Compatibility; GA.

The Contractor shall establish the compatibility of the job cement and the proposed accelerators.

Preconstruction Test Panels; FIO.

Cores and sawed concrete beams shall be taken from test panels and tested.

SD-13 Certificates

Portland Cement; FIO.

Portland cement shall be certified for compliance with all specification requirements.

Pozzolans; FIO.

Fly ash and other pozzolans shall be certified for compliance with all specification requirements.

Silica Fume; FIO.

Silica fume shall be certified for compliance with all specification requirements.

Accelerating Admixtures; FIO.

Accelerating admixtures shall be certified for compliance with all specification requirements.

Curing Materials; FIO.

Curing materials shall be certified for compliance with all specification requirements.

Steel Fiber Reinforcement; FIO.

Fiber reinforcement shall be certified for compliance with all specification requirements.

Qualifications; GA.

Qualifications of each nozzleman shall be certified.

1.7 QUALIFICATIONS

The Contractor shall submit a resume for each nozzleman certifying that each has not less than 1 year's experience for the particular type of shotcrete to be applied. The resume shall include company name, address, and telephone number, name of supervisor, and detailed description of work performed. All nozzlemen shall be certified in accordance with ACI 506.3R. Qualifications of additional nozzlemen throughout the job shall be similarly submitted for approval.

1.8 PRECONSTRUCTION TEST PANELS

Specimens of the preconstruction test panels shall be made by each application crew using the equipment, materials, mixture proportions, and procedures for each mixture being considered, and for each shooting position to be encountered in the job. The same reinforcement as in the structure shall be provided in at least one-half of the panel to test for proper embedment of reinforcing steel. The test panels shall be fabricated to the same thickness as the structure, but not less than 4 inches. At least five 3-inch diameter cores from each panel shall be taken for testing for compressive strength in accordance with ASTM C 1140 when nonfiber-reinforced shotcrete is used. The compressive strength of the cores shall meet the requirements specified in paragraph COMPRESSIVE STRENGTH. Three 4 by 4 by 14 inch beams shall be obtained in accordance with ASTM C 1140from the test panels when fiber-reinforced shotcrete is used.

PART 2 PRODUCTS

2.1 MATERIALS

2.1.1 Cementitious Materials

Cementitious materials shall be portland cement in combination with pozzolan and shall conform to appropriate specifications listed below.

2.1.1.1 Portland Cement

Portland cement shall meet the requirements of ASTM C 150 Type II, low alkali.

2.1.2 Aggregates

Aggregates shall conform to ASTM C 33 with the combined grading of coarse and fine aggregates conforming to the grading shown below.

PERCENT BY MASS PASSING INDIVIDUAL SIEVES

SIEVE SIZE	GRADING NO*
19.0 mm (3/4 in.)	--
12.5 mm (1/2 in.)	100
9.5 mm (3/8 in.)	90-100
4.75 mm (No. 4)	75-85
2.36 mm (No. 8)	50-70
1.18 mm (No. 16)	35-55
600 µm (No. 30)	20-35
300 µm (No. 50)	8-20
150 µm (No. 100)	2-10

* Fine and coarse aggregates shall be batched separately to avoid segregation.

2.1.3 Water

Fresh, clean, potable mixing water or nonpotable water which meets the requirements of COE CRD-C 400 shall be used.

2.1.4 Admixtures

Admixtures to be used, when required or approved, shall comply with the appropriate sections of ASTM C 1141. Except as otherwise accepted, soluble admixtures shall be dissolved in water before introduction into the shotcrete mixture.

2.1.4.1 Accelerators

When accelerating admixtures complying with ASTM C 1141, Type II, Grade 1, are to be used, the Contractor shall establish the accelerator compatibility of the job cement and the proposed accelerators using ASTM C 266, except as modified herein. The powdered accelerator shall be blended with 50 grams of cement until uniform and 15 milliliters of water shall then be added. The liquid accelerator shall first be mixed with 15 milliliters of water and then added to 50 grams of cement. Three percent of the proposed accelerator by mass of cement shall be used as a starting point. Mixing shall be accomplished within 15 seconds. The specimen shall be molded within 1 minute of adding the mixing water. If initial set is 2 minutes or less and a final set is 10 minutes or less, the accelerator is considered compatible. If these values are not achieved in the first test, additional tests shall be run using 2 percent and 4 percent of accelerator.

2.1.5 Curing Materials

Curing materials shall meet the following requirements.

2.1.5.1 Impervious Sheet Materials

ASTM C 171, type optional except polyethylene film, if used, shall be white opaque.

2.1.5.2 Membrane-Forming Curing Compound

ASTM C 309, Type 1-D or Type 2.

PART 3 EXECUTION

3.1 PRODUCTION OF SHOTCRETE

3.1.1 Dry Mix Process

3.1.1.1 Batching and Mixing

Aggregate and cementitious materials may be batched by mass or by volume. Equipment for batching by mass shall be capable of the accuracy specified in ASTM C 94. Volumetric equipment shall be capable of batching with the accuracy specified in ASTM C 685. The mixing equipment shall be capable of thoroughly mixing the materials in sufficient quantity to maintain placing continuity and be capable of discharging all mixed material without any carryover from one batch to the next.

3.1.1.2 Delivery Equipment

The equipment shall be capable of discharging the aggregate-cement mixture into the delivery hose and delivering a continuous smooth stream of uniformly mixed material to the discharge nozzle. The discharge nozzle shall be equipped with a manually operated water injection system (water ring) for directing an even distribution of water through the aggregate-cement mixture. The water valve shall be capable of ready adjustment to vary the quantity of water and shall be convenient to the nozzleman. The water pressure at the discharge nozzle shall be sufficiently greater than the operating air pressure to ensure that the water is completely mixed with the other materials. If the line water pressure is inadequate, a water pump shall be introduced into the line. The water pressure shall be steady (nonpulsating). The delivery equipment shall be thoroughly cleaned at the end of each shift. Equipment parts, especially the nozzle liner and water ring, shall be regularly inspected and replaced as required.

3.1.2 Wet Mix Process

3.1.2.1 Batching and Mixing

Batching and mixing shall be accomplished in accordance with the applicable provisions of ASTM C 94. If volumetric batching and mixing are used, the materials shall be batched and mixed in accordance with the applicable provisions of ASTM C 685. The mixing equipment shall be capable of thoroughly mixing the specified materials in sufficient quantity to maintain continuous placing. Ready-mix shotcrete complying with ASTM C 94 may be used.

3.1.2.2 Delivery Equipment

The equipment shall be capable of delivering the premixed materials accurately, uniformly, and continuously through the delivery hose. Recommendations of the equipment manufacturer shall be followed on the type and size of nozzle to be used and on cleaning, inspection, and maintenance of the equipment.

3.1.2.3 Air Content

Air-entraining admixture shall be used in such proportion that the air content of the shotcrete prior to gunning shall be 9.0 plus or minus (±)

1.0 percent as determined by ASTM C 231.

3.1.3 Air Supply

The Contractor shall provide a supply of clean, dry air adequate for maintaining sufficient nozzle velocity for all parts of the work and, if required, for simultaneous operation of a suitable blowpipe for clearing away rebound.

3.2 PREPARATION OF SURFACES

3.2.1 Earth

Earth shall be compacted and trimmed to line and graded before placement of shotcrete. Surfaces to receive shotcrete shall be dampened.

3.2.2 Existing Concrete

All unsound and loose materials shall be removed by sandblasting, grinding, or high-pressure water jets before applying shotcrete. Any area to be repaired shall be chipped off or scarified to remove offsets which would cause an abrupt change in thickness without suitable reinforcement. Edges shall be tapered to leave no square shoulders at the perimeter of a cavity. The surface shall be dampened but without visible free water.

3.2.3 Rock

Rock surfaces shall be cleaned to remove loose or drummy material, mud, running water, and other foreign matter that will prevent bond of the shotcrete. The rock surface shall be dampened prior to placement of shotcrete.

3.2.4 Shotcrete

When a layer of shotcrete is to be covered by a succeeding layer at a later time, it shall first be allowed to develop its initial set. Then all laitance, loose material, and rebound shall be removed by brooming or scraping. Hardened laitance set shall be removed by sandblasting and the surface thoroughly cleaned.

3.2.5 Construction Joints

Unless otherwise specified, construction joints shall be tapered to a shallow edge form, about 1 inch thick. If nontapered joints are specified, special care shall be taken to avoid or remove trapped rebound at the joint. The entire joint shall be thoroughly cleaned and wetted prior to the application of additional shotcrete.

3.3 PLACEMENT OF SHOTCRETE

3.3.1 General

Shotcrete shall be placed using suitable delivery equipment and procedures. The area to which shotcrete is to be applied shall be clean and free of rebound or overspray.

3.3.2 Placement Techniques

3.3.2.1 Placement Control

Thickness, method of support, air pressure, and water content of shotcrete shall be controlled to preclude sagging or sloughing off. Shotcreting shall be discontinued or suitable means shall be provided to screen the nozzle stream if wind or air currents cause separation of the nozzle stream during placement.

3.3.2.2 Corners

Horizontal and vertical corners and any area where rebound cannot escape or be blown free shall be filled first.

3.3.3 Placement Around Reinforcement

The nozzle shall be held at such distance and angle to place material behind reinforcement before any material is allowed to accumulate on the face of the reinforcement. In the dry-mix process, additional water may be added to the mixture when encasing reinforcement to facilitate a smooth flow of material behind the bars. Shotcrete shall not be placed through more than one layer of reinforcing steel rods or mesh in one application unless demonstrated by preconstruction tests that steel is properly encased.

3.3.4 Cover of Reinforcement

The following minimum cover shall be provided.

a. For shotcrete used as linings, coatings, slab, or wall: 1-1/2 inches.

b. For required structural reinforcement in beams, girders, and columns: 1-1/2 inches.

3.3.5 Placement Precautions

The following precautions shall be taken during placement.

a. Placement shall be stopped if drying or stiffening of the mixture takes place at any time prior to delivery to the nozzle.

b. Rebound or previously expended material shall not be used in the shotcrete mixture.

3.4 REPAIR OF DEFECTS

3.4.1 Defects

Defective areas larger than 48 square inches or 2 inches deep shall be removed and replaced with fresh shotcrete. These defects include honeycombing, lamination, dry patches, voids, or sand pockets. Defective areas shall be removed in accordance with the procedures described in paragraph EXISTING CONCRETE and replaced with fresh shotcrete.

3.4.1.1 Repairs

All repairs shall be made within 1 week of the time the deficiency is discovered. All unacceptable materials shall be removed and repaired by the procedures described in the following two paragraphs. Voids and holes left by the removal of tie rods in all permanently exposed surfaces not to be backfilled and in surfaces to be exposed to water shall be reamed and

completely filled with dry-patching mortar as specified below.

3.4.1.2 Minor Patching

Minor patching may be accomplished with a dry-pack mixture, or with materials as approved by the Contracting Officer. Patches that exceed 0.1 cubic foot in volume shall receive a brush coat of approved epoxy resin meeting ASTM C 881, Type II, as a prime coat. Care shall be taken not to spill epoxy or overcoat the repair surface so that the epoxy runs or is squeezed out onto the surface which will remain exposed to view. Epoxy resin shall be used in strict conformance with manufacturer's recommendations with special attention paid to pot life, safety, and thin film tack time.

3.4.2 Core Holes

Core holes shall not be repaired with shotcrete. Instead, they shall be filled solid with a dry-pack mixture after being cleaned and thoroughly dampened.

3.5 FINISHING

3.5.1 Natural Gun Finish

Unless otherwise specified, undisturbed final layer of shotcrete as applied from nozzle without hand finishing shall be provided.

3.5.2 Cutting Screed

After the surface has taken its initial set (crumbling slightly when cut), excess material outside the forms and ground wires shall be sliced off with a downward cutting motion using a sharp-edged cutting screed.

3.5.3 Flash Coat

A thin coat of shotcrete containing finer sand applied from a distance greater than normal shall be applied to the surface as soon as possible after the screeding.

3.5.4 Float and Trowel Finish

Final surface finish shall be provided using wood trowel. Troweling of thin sections of shotcrete shall be avoided unless both troweling and commencement of moisture curing take place within a relatively short period after placement of shotcrete.

3.5.5 Fiber-Reinforced Shotcrete

The Contractor shall finish the outer surface of the structure with a layer of nonfiber-reinforced shotcrete and provide an appropriate finish as denoted.

3.6 CURING AND PROTECTION

3.6.1 Initial Curing

Immediately after finishing, shotcrete shall be kept continuously moist for at least 3 days. One of the following materials or methods shall be used:

a. Ponding or continuous sprinkling.

b. Absorptive mat or fabric, sand, or other covering kept continuously wet.

c. Curing Compounds. On natural gun or flash finishes, use the coverage application requirement of 100 square feet per gallon or twice the manufacturer's requirement, whichever is less. Curing compounds shall not be used on any surfaces against which additional shotcrete or other cementitious finishing materials are to be bonded unless positive measures, such as sandblasting, are taken to completely remove curing compounds prior to the application of such additional materials.

3.6.2 Final Curing

Additional curing shall be provided immediately following the initial curing and before the shotcrete has dried. One of the following materials or methods shall be used:

a. Continue the method used in initial curing.

b. Application of impervious sheet material conforming to ASTM C 171.

3.6.3 Formed Surface

If forms are to be removed during curing period, one of the curing materials or methods listed in paragraph INITIAL CURING shall be used immediately. Such curing shall be continued for the remainder of the curing period.

3.6.4 Duration of Curing

Curing shall be continued for the first 7 days after shotcreting or until the specified compressive strength of the in-place shotcrete as determined by specimens obtained and tested in accordance with ASTM C 42 is achieved.

3.6.5 Temperature Considerations

The air temperature in contact with the shotcrete shall be continuously maintained at a temperature above 40 degrees F for at least 3 days after placement. No shotcrete shall be applied when the concrete surface or air in contact with the concrete surface is below 40 degrees F.

3.7 TESTS

3.7.1 Strength Testing

Test specimens shall be initially cured onsite, then shall be transported in an approved manner to an approved testing laboratory meeting the requirements of ASTM C 1077 within 48 hours of scheduled testing time.

3.7.1.1 Test Panel

One test panel shall be made for every 50 cubic yards of shotcrete placed but not less than one per each shift during which any shotcrete is placed. Panels shall have minimum dimensions of 18 by 18 by 4 inches and shall be gunned in the same positions as the work represented during the course of the work by the Contractor's regular nozzleman. Panels shall be field cured in the same manner as in the job. Three 3-inch diameter cores shall

be drilled from each panel at least 40 hours prior to testing and tested in accordance with ASTM C 1140. Two 4 by 4 by 14 inch beams shall be saw cut from the test panels when fiber-reinforced shotcrete is used. The fiber-reinforced shotcrete beams shall be tested in accordance with ASTM C 1140. If the quality of shotcrete is questionable, the Government may saw or core the panel specimens to determine the shotcrete quality and if remedial action is necessary.

3.7.1.2 Test Cores

Test cores shall be drilled from the structure at least 40 hours prior to testing and tested in accordance with ASTM C 1140. A set of three cores shall be taken not less than once each shift that shotcrete is placed nor less than once for each 50 cubic yards of shotcrete placed through the nozzle. The diameter of core specimens shall be determined in accordance with ASTM C 42.

3.7.2 Aggregate Moisture

Prior to batching the shotcrete and at least once during a shift in which shotcrete is being batched, the coarse and fine aggregate moisture content shall be determined in accordance with ASTM C 566. The batch weights of both the aggregates and mixing water shall be appropriately adjusted to account for the available free moisture in the aggregates. The amount of free moisture in the aggregates, expressed as pounds of water per cubic yard, shall be recorded on the batching ticket and delivered to the Contracting Officer prior to placement during the shift. The Contracting Officer will have the option to request additional aggregate moisture content tests for each of the required tests.

3.7.3 Grading

The grading of the coarse and fine aggregate shall be determined in accordance with ASTM C 136. The fine and coarse aggregate grading shall be determined prior to batching the shotcrete and at least once during a shift in which shotcrete is being batched. The Contracting Officer will have the option to require one additional sieve analysis test for aggregate type.

3.7.4 Thickness

The minimum shotcrete thickness shall be as shown in the drawings. The unhardened shotcrete shall be checked for thickness using a probe by the nozzleman or laborer at the time of placement. These thickness checks shall be at 15-minute intervals and all low or thin areas shall be corrected by applying additional shotcrete.

3.7.5 Mixture Proportions

Record and check mixture proportions at least once per shift for weigh batching. Record and check mixture proportions as recommended by ASTM C 685 at least once per shift for volumetric batching and continuous mixing plants.

3.7.6 Preparations

Prior to each placement of shotcrete, the Contractor's inspector shall certify in writing or by an approved checkout form that cleanup and preparations are in accordance with the plans and specifications.

3.7.7 Air Content

Air content tests shall be conducted on wet-mix shotcrete according to ASTM C 231 with a frequency of not less than once each shift nor less than once for each 50 cubic yards of shotcrete placed through the nozzle. Tests shall be conducted on samples taken as the wet shotcrete mixture is placed in the delivery equipment.

-- End of Section --

SECTION TABLE OF CONTENTS

DIVISION 16 - ELECTRICAL

SECTION 16070

SEISMIC PROTECTION FOR ELECTRICAL EQUIPMENT

PART 1 GENERAL

1.1 REFERENCES
1.2 SYSTEM DESCRIPTION
1.2.1 General Requirements
1.2.2 Electrical Equipment
1.2.3 Contractor Designed Bracing
1.3 SUBMITTALS
1.4 EQUIPMENT REQUIREMENTS
1.4.1 Rigidly Mounted Equipment

PART 2 PRODUCTS

2.1 BRACING MATERIALS

PART 3 EXECUTION

3.1

-- End of Section Table of Contents --

SECTION 16070

SEISMIC PROTECTION FOR ELECTRICAL EQUIPMENT

PART 1 GENERAL

1.1 REFERENCES

The publications listed below form a part of this specification to the extent referenced. The publications are referred to in the text by basic designation only.

AMERICAN STANDARDS FOR TESTING AND MATERIALS (ASTM)

ASTM E 580	(1996) Application of Ceiling Suspension Systems for Acoustical Tile and Lay-in Panels in Areas Requiring Moderate Seismic Restraint

COE TECHNICAL INSTRUCTIONS (TI)

TI 809-04	(1998) Seismic Design for Buildings

UNDERWRITERS LABORATORIES (UL)

UL 1570	(1995; Rev thru Jun 1997) Fluorescent Lighting Fixtures
UL 1571	(1995; Rev thru Jun 1997) Incandescent Lighting Fixtures

1.2 SYSTEM DESCRIPTION

1.2.1 General Requirements

The requirements for seismic protection measures described in this section shall be applied to the electrical equipment and systems listed below.

1.2.2 Electrical Equipment

Electrical equipment shall include the following items to the extent required on the drawings or in other sections of these specifications:

Transformers

1.2.3 Contractor Designed Bracing

The Contractor shall design the bracing in accordance with TI 809-04 and additional data furnished by the Contracting Officer. Resistance to lateral forces induced by earthquakes shall be accomplished without consideration of friction resulting from gravity loads. TI 809-04 uses parameters for the building, not for the equipment in the building; therefore, corresponding adjustments to the formulas shall be required.

Loadings determined using TI 809-04 are based on strength design; therefore, the AISC LRFP specifications shall be used for the design.

1.3 SUBMITTALS

Government approval is required for submittals with a "GA" designation; submittals having an "FIO" designation are for information only. The following shall be submitted in accordance with Section 01330 SUBMITTAL PROCEDURES:

SD-01 Data

Contractor Designed Bracing; GA.

Copies of the Design Calculations with the Drawings. Calculations shall be approved, certified, stamped and signed by a Registered Professional Engineer. Calculations shall verify the capability of structural members to which bracing is attached for carrying the load from the brace.

1.4 EQUIPMENT REQUIREMENTS

1.4.1 Rigidly Mounted Equipment

The following specific items of equipment to be furnished under this contract shall be constructed and assembled to withstand the seismic forces specified in TI 809-04, Chapter 10. For any rigid equipment which is rigidly attached on both sides of a building expansion joint, flexible joints for piping, electrical conduit, etc., that are capable of accommodating displacements equal to the full width of the joint in both orthogonal directions, shall be provided.

Transformers

PART 2 PRODUCTS

2.1 BRACING MATERIALS

Bracing materials (e.g. rods, plates, rope, angles, etc.) shall be as required by the Contractor's design.

PART 3 EXECUTION

3.1

Not applicable.

-- End of Section --

SECTION TABLE OF CONTENTS

DIVISION 16 - ELECTRICAL

SECTION 16370

ELECTRICAL DISTRIBUTION SYSTEM, AERIAL

PART 1 GENERAL

1.1 REFERENCES
1.2 GENERAL REQUIREMENTS
1.2.1 Terminology
1.2.2 Service Conditions
1.3 SUBMITTALS
1.4 DELIVERY, STORAGE, AND HANDLING
1.5 EXTRA MATERIALS

PART 2 PRODUCTS

2.1 GENERAL REQUIREMENTS
2.2 STANDARD PRODUCT
2.3 NAMEPLATES
2.3.1 General
2.3.2 Liquid-Filled Transformer Nameplates
2.4 CORROSION PROTECTION
2.4.1 Aluminum Materials
2.4.2 Ferrous Metal Materials
2.4.2.1 Hardware
2.4.2.2 Equipment
2.4.3 Finishing
2.5 CONDUCTORS, CONNECTORS, AND SPLICES
2.5.1 Aluminum-Composition Conductors
2.5.2 Copper Conductors
2.5.3 Connectors and Splices
2.6 MEDIUM-VOLTAGE LINES
2.6.1 Bare Medium-Voltage Lines
2.6.2 Insulated Medium-Voltage Lines
2.7 LOW-VOLTAGE LINES
2.8 POLES AND HARDWARE
2.8.1 Wood Poles
2.8.2 Steel Poles
2.8.3 Concrete Poles
2.8.4 Pole Line Hardware
2.8.5 Armless Construction
2.8.6 Guy Assemblies
2.9 INSULATORS
2.9.1 Medium-Voltage Line Insulators
2.9.2 Low-Voltage Line Insulators
2.9.3 Strain Insulators for Guy Wires
2.9.4 Apparatus Insulators
2.10 CROSSARM ASSEMBLIES
2.10.1 Crossarms
2.11 FUSES AND SWITCHES, MEDIUM-VOLTAGE

2.11.1 Fuse Cutouts
2.12 TRANSFORMERS
2.13 SURGE ARRESTERS
2.14 GROUNDING AND BONDING
2.14.1 Driven Ground Rods
2.14.2 Grounding Conductors
2.15 WARNING SIGNS
2.16 LIQUID DIELECTRICS
2.17 FACTORY TESTS

PART 3 EXECUTION

3.1 GENERAL INSTALLATION REQUIREMENTS
3.1.1 Conformance to Codes
3.1.2 Verification of Dimensions
3.1.3 Tree Trimming
3.1.4 Disposal of Liquid Dielectrics
3.2 POLE INSTALLATION
3.2.1 Wood Pole Setting
3.2.2 Aluminum, Steel, and Concrete Pole Setting
3.2.2.1 Cast-In-Place Foundations
3.2.2.2 Power-Installed Screw Foundations
3.3 CROSSARM MOUNTING
3.3.1 Line Arms and Buck Arms
3.3.2 Equipment Arms
3.4 GUY INSTALLATION
3.5 CONDUCTOR INSTALLATION
3.5.1 Line Conductors
3.5.2 Connectors and Splices
3.5.3 Conductor-To-Insulator Attachments
3.5.4 Armor Rods
3.5.5 Medium-Voltage Insulated Cables
3.5.6 Low-Voltage Insulated Cables
3.6 TRANSFORMER INSTALLATION
3.7 CONNECTIONS TO UTILITY LINES
3.8 CONNECTIONS BETWEEN AERIAL AND UNDERGROUND SYSTEMS
3.9 GROUNDING
3.9.1 Grounding Electrodes
3.9.2 Grounding and Bonding Connections
3.9.3 Grounding Electrode Conductors
3.10 FIELD TESTING
3.10.1 General
3.10.2 Safety
3.10.3 Ground-Resistance Tests
3.10.4 Low-Voltage Cable Test
3.10.5 Operating Tests
3.11 ACCEPTANCE

-- End of Section Table of Contents --

SECTION 16370

ELECTRICAL DISTRIBUTION SYSTEM, AERIAL

PART 1 GENERAL

1.1 REFERENCES

The publications listed below form a part of this specification to the extent referenced. The publications are referred to in the text by basic designation only.

AMERICAN NATIONAL STANDARDS INSTITUTE (ANSI)

ANSI C29.1	(1988; R 1996) Electrical Power Insulators - Test Methods
ANSI C29.2	(1992) Insulators - Wet-Process Porcelain and Toughened Glass - Suspension Type
ANSI C29.3	(1986; R 1995) Wet Process Porcelain Insulators - Spool Type
ANSI C29.4	(1989; R 1995) Wet-Process Porcelain Insulators - Strain Type
ANSI C29.5	(1984; R 1995) Wet-Process Porcelain Insulators - Low- and Medium-Voltage Types
ANSI C29.6	(1996) Wet-Process Porcelain Insulators - High-Voltage Pin Type
ANSI C29.8	(1985; R 1995) Wet-Process Porcelain Insulators - Apparatus, Cap and Pin Type
ANSI C29.9	(1983; R 1996) Wet-Process Porcelain Insulators - Apparatus, Post-Type
ANSI C37.32	(1996) High-Voltage Air Switches, Bus Supports, and Switch Accessories - Schedules of Preferred Ratings, Manufacturing Specifications, and Application Guide
ANSI C57.12.20	(1994) Transformers, Overhead-Type Distribution Transformers, 500 kVA and Smaller: High Voltage, 34 500 Volts and Below; Low Voltage, 7970/13 800Y Volts and Below
ANSI C135.1	(1979) Galvanized Steel Bolts and Nuts for Overhead Line Construction
ANSI C135.2	(1987) Threaded Zinc-Coated Ferrous Strand-Eye Anchor Rods and Nuts for

	Overhead Line Construction
ANSI C135.4	(1987) Zinc-Coated Ferrous Eyebolts and Nuts for Overhead Line Construction
ANSI C135.14	(1979) Staples with Rolled or Slash Points for Overhead Line Construction
ANSI C135.22	(1988) Zinc-Coated Ferrous Pole-Top Insulator Pins with Lead Threads for Overhead Line Construction
ANSI C135.30	(1988) Zinc-Coated Ferrous Ground Rods for Overhead or Underground Line Construction
ANSI O5.1	(1992) Specifications and Dimensions for Wood Poles

AMERICAN SOCIETY FOR TESTING AND MATERIALS (ASTM)

ASTM A 36/A 36M	(1996) Carbon Structural Steel
ASTM A 123/A 123M	(1997a) Zinc (Hot-Dip Galvanized) Coatings on Iron and Steel Products
ASTM A 153/A 153M	(1998) Zinc Coating (Hot-Dip) on Iron and Steel Hardware
ASTM A 475	(1998) Zinc-Coated Steel Wire Strand
ASTM A 575	(1996) Steel Bars, Carbon, Merchant Quality, M-Grades
ASTM A 576	(1990b; R 1995) Steel Bars, Carbon, Hot-Wrought, Special Quality
ASTM B 1	(1995) Hard-Drawn Copper Wire
ASTM B 8	(1995) Concentric-Lay-Stranded Copper Conductors, Hard, Medium-Hard, or Soft
ASTM B 117	(1997) Operating Salt Spray (Fog) Apparatus
ASTM B 228	(1993) Concentric-Lay-Stranded Copper-Clad Steel Conductors
ASTM B 230	(1997) Aluminum 1350-H19 Wire for Electrical Purposes
ASTM B 231	(1995) Concentric-Lay-Stranded Aluminum 1350 Conductors
ASTM B 232	(1997) Concentric-Lay-Stranded Aluminum Conductors, Coated-Steel Reinforced (ACSR)
ASTM B 398	(1997) Aluminum-Alloy 6201-T81 Wire for Electrical Purposes
ASTM B 399	(1997) Concentric-Lay-Stranded

	Aluminum-Alloy 6201-T81 Conductors
ASTM B 416	(1993) Concentric-Lay-Stranded Aluminum-Clad Steel Conductors
ASTM D 923	(1997) Sampling Electrical Insulating Liquids
ASTM D 1654	(1992) Evaluation of Painted or Coated Specimens Subjected to Corrosive Environments
ASTM D 4059	(1996) Analysis of Polychlorinated Biphenyls in Insulating Liquids by Gas Chromatography.
ASTM F 883	(1997) Padlocks

AMERICAN WOOD-PRESERVERS' ASSOCIATION (AWPA)

AWPA C4	(1995) Poles - Preservative Treatment by Pressure Processes
AWPA C25	(1995) Sawn Crossarms - Preservative Treatment by Pressure Processes
AWPA P1/P13	(1995) Standard for Coal Tar Creosote for Land and Fresh Water and Marine (Coastal Water Use)
AWPA P5	(1997) Standards for Waterborne Preservatives
AWPA P8	(1997) Standards for Oil-Borne Preservatives
AWPA P9	(1997) Standards for Solvents for Organic Preservative Systems

INSTITUTE OF ELECTRICAL AND ELECTRONIC ENGINEERS (IEEE)

IEEE C2	(1997) National Electrical Safety Code
IEEE C37.34	(1994) Test Code for High-Voltage Air Switches
IEEE C37.41	(1994; C37.41e) Design Tests for High-Voltage Fuses, Distribution Enclosed Single-Pole Air Switches, Fuse Disconnecting Switches, and Accessories
IEEE C37.60	(1981; R 1992) Requirements for Overhead, Pad Mounted, Dry Vault and Submersible Automatic Circuit Reclosers and Fault Interrupters for AC Systems
IEEE C37.63	(1997) Requirements for Overhead, Pad-Mounted, Dry-Vault, and Submersible Automatic Line Sectionalizer for AC Systems

IEEE C57.12.00	(1993) IEEE Standard General Requirements for Liquid-Immersed Distribution, Power, and Regulating Transformers
IEEE C57.13.2	(1991) IEEE Standard Conformance Test Procedures for Instrument Transformers
IEEE C57.15	(1986; R 1992) Requirements, Terminology, and Test Code for Step-Voltage and Induction-Voltage Regulators
IEEE C57.19	(1991; R 1997) IEEE Standard General Requirements and Test Procedures for Outdoor Power Apparatus Bushings
IEEE C57.19.01	(1991; R 1997) IEEE Standard Performance Characteristics and Dimensions for Outdoor Apparatus Bushings
IEEE C57.98	(1993) Guide for Transformer Impulse Tests
IEEE C62.1	(1989; R 1994) Surge Arresters for AC Power Circuits
IEEE C62.2	(1987; R 1994) Guide for the Application of Gapped Silicon-Carbide Surge Arresters for Alternating Current Systems
IEEE C62.11	(1998) IEEE Standard Metal-Oxide Surge Arresters for AC Power Circuits
IEEE Std 18	(1992) Shunt Power Capacitors
IEEE Std 81	(1983) Guide for Measuring Earth Resistivity, Ground Impedance, and Earth Surface Potentials of a Ground System (Part 1)
IEEE Std 100	(1996) IEEE Standard Dictionary of Electrical and Electronics Terms
IEEE Std 242	(1986; R 1991) Recommended Practice for Protection and Coordination of Industrial and Commercial Power Systems
IEEE Std 399	(1997) Recommended Practice for Industrial and Commercial Power Systems Analysis
IEEE Std 404	(1993; errata) Cable Joints for Use with Extruded Dielectric Cable Rated 5000 V Through 138 000 V and Cable Joints for Use with Laminated Dielectric Cable Rated 2500 V Through 500 000 V

INSULATED CABLE ENGINEERING ASSOCIATION (ICEA)

ICEA S-70-547	(1992) Weather Resistant Polyolefin Covered Wire & Cable

NATIONAL ELECTRICAL MANUFACTURERS ASSOCIATION (NEMA)

NEMA HV 2	(1991) Application Guide for Ceramic Suspension Insulators
NEMA ICS 6	(1993) Industrial Control and Systems, Enclosures
NEMA LA 1	(1992) Surge Arresters
NEMA SG 2	(1993) High Voltage Fuses
NEMA WC 5	(1992; Rev 1) Thermoplastic-Insulated Wire and Cable for the Transmission and Distribution of Electrical Energy
NEMA WC 7	(1991; Rev 1) Cross-Linked-Thermosetting-Polyethylene-Insulated Wire and Cable for the Transmission and Distribution of Electrical Energy
NEMA WC 8	(1991; Rev 1; Rev 2) Ethylene-Propylene-Rubber-Insulated Wire and Cable for the Transmission and Distribution of Electrical Energy

NATIONAL FIRE PROTECTION ASSOCIATION (NFPA)

NFPA 70	(1999) National Electrical Code

RURAL UTILITIES SERVICES (RUS)

RUS Bull 1728H-701	(1993) Specification for Wood Crossarms (Solid and Laminated), Transmission Timbers and Pole Keys

UNDERWRITERS LABORATORIES (UL)

UL 467	(1993; Rev thru Aug 1996) Grounding and Bonding Equipment
UL 486A	(1997; Rev thru Dec 1998) Wire Connectors and Soldering Lugs for Use with Copper Conductors
UL 486B	(1997; Rev Jun 1997) Wire Connectors for Use with Aluminum Conductors

1.2 GENERAL REQUIREMENTS

1.2.1 Terminology

Terminology used in this specification is as defined in IEEE Std 100.

1.2.2 Service Conditions

Items provided under this section shall be specifically suitable for the

following service conditions. Seismic details shall conform to Sections 16070 SEISMIC PROTECTION FOR ELECTRICAL EQUIPMENT.

a. Altitude 2300 feet

b. Ambient Temperature 104 degrees F

c. Seismic Parameters Zone 4

1.3 SUBMITTALS

Government approval is required for submittals with a "GA" designation; submittals having an "FIO" designation are for information only. The following shall be submitted in accordance with Section 01330 SUBMITTAL PROCEDURES:

Manufacturer's Catalog; FIO.

Catalog cuts, brochures, circulars, specifications, product data, and printed information in sufficient detail and scope to verify compliance with the requirements of the contract documents.

Material, Equipment, and Fixture Lists; FIO.

A complete itemized listing of equipment and materials proposed for incorporation into the work. Each entry shall include the item number, the quantity of items proposed, and the name of the manufacturer of the item.

Installation Procedures; FIO.

As a minimum, installation procedures for regulators, transformers and reclosers. Procedures shall include diagrams, instructions, and precautions required to install, adjust, calibrate, and test the devices and equipment.

SD-04 Drawings

Electrical Distribution System; FIO.

Detail drawings consisting of equipment drawings, illustrations, schedules, instructions, diagrams and other information necessary to define the installation and enable the Government to check conformity with the requirements of the contract drawings. Detail drawings shall as a minimum include:

b. Poles.

c. Calculations for steel poles and power installed screw foundations.

d. Crossarms.

e. Transformers.

h. Conductors.

i. Insulators.

j. Surge arresters.

If departures from the contract drawings are deemed necessary by the Contractor, complete details of such departures shall be submitted with the detail drawings. Approved departures shall be made at no additional cost to the Government.

Detail drawings shall show how components are assembled, function together and how they will be installed on the project. Data and drawings for component parts of an item or system shall be coordinated and submitted as a unit. Data and drawings shall be coordinated and included in a single submission. Multiple submissions for the same equipment or system are not acceptable except where prior approval has been obtained from the Contracting Officer. In such cases, a list of data to be submitted later shall be included with the first submission. Detail drawings shall consist of the following:

a. Detail drawings showing physical arrangement, construction details, connections, finishes, materials used in fabrication, provisions for conduit or busway entrance, access requirements for installation and maintenance, physical size, electrical characteristics, foundation and support details, and equipment weight. Drawings shall be drawn to scale and/or dimensioned. Optional items shall be clearly identified as included or excluded.

b. Internal wiring diagrams of equipment showing wiring as actually provided for this project. External wiring connections shall be clearly identified.

As-Built Drawings; FIO.

The as-built drawings shall be a record of the construction as installed. The drawings shall include the information shown on the contract drawings as well as deviations, modifications, and changes from the contract drawings, however minor. The as-built drawings shall be kept at the job site and updated daily. The as-built drawings shall be a full sized set of prints marked to reflect deviations, modifications, and changes. The as-built drawings shall be complete and show the location, dimensions, part identification, and other information. Additional sheets may be added. The as-built drawings shall be jointly inspected for accuracy and completeness by the Contractor's quality control representative and by the Contracting Officer prior to the submission of each monthly pay estimate. Upon completion of the work, the Contractor shall submit three full sized sets of the marked prints to the Contracting Officer for approval. If upon review, the as-built drawings are found to contain errors and/or omissions, they will be returned to the Contractor for correction. The Contractor shall correct and return the as-built drawings to the Contracting Officer for approval within ten calendar days from the time the drawings are returned to the Contractor.

SD-09 Reports

Factory Test; FIO.

Certified factory test reports shall be submitted when the manufacturer performs routine factory tests, including tests required by standards listed in paragraph REFERENCES. Results of factory tests performed shall be certified by the manufacturer, or an approved testing laboratory, and submitted within 7 days following successful completion of the tests specified in applicable publications or in these specifications.

Field Testing; FIO.

A proposed field test plan 30 days prior to testing the installed system. No field test shall be performed until the test plan is approved. The test plan shall consist of complete field test procedures including tests to be performed, test equipment required, and tolerance limits.

Test Reports; GA.

Six copies of the information described below in 8-1/2 by 11 inch binders having a minimum of 5 rings, and including a separate section for each test. Sections shall be separated by heavy plastic dividers with tabs.

a. A list of equipment used, with calibration certifications.

b. A copy of measurements taken.

c. The dates of testing.

d. The equipment and values to be verified.

e. The condition specified for the test.

f. The test results, signed and dated.

g. A description of adjustments made.

SD-13 Certificates

Materials and Equipment; FIO.

Where materials or equipment are specified to conform to the standards of the Underwriters Laboratories (UL) or to be constructed or tested, or both, in accordance with the standards of the American National Standards Institute (ANSI), the Institute of Electrical and Electronic Engineers (IEEE), or the National Electrical Manufacturers Association (NEMA), the Contractor shall submit proof that the items provided under this section of the specifications conform to such requirements. The label of, or listing by, UL will be acceptable as evidence that the items conform thereto. Either a certification or a published catalog specification data statement, to the effect that the item is in accordance with the referenced ANSI or IEEE standard, will be acceptable as evidence that the item conforms thereto. A similar certification or published catalog specification data statement to the effect that the item is in accordance with the referenced NEMA standard, by a company listed as a member company of NEMA, will be acceptable as evidence that the item conforms thereto. In lieu of such certification or published data, the Contractor may submit a certificate from a recognized testing agency equipped and competent to perform such services, stating that the items have been tested and that they conform to the requirements listed, including methods of testing of the specified agencies.

SD-19 OPERATION AND MAINTENANCE MANUALS

Electrical Distribution System; FIO.

Six copies of Operation and Maintenance manuals electrical distribution system shall be provided, within 7 calendar days following the completion of tests and shall include assembly, installation, operation and maintenance instructions, spare parts data which provides supplier name, current cost, catalog order number, and a recommended list of spare parts to be stocked. Manuals shall also include data outlining detailed procedures for system startup and operation, and a troubleshooting guide which lists possible operational problems and corrective action to be taken. A brief description of all equipment, basic operating features, and routine maintenance requirements shall also be included. Documents shall be bound in a binder marked or identified on the spine and front cover. A table of contents page shall be included and marked with pertinent contract information and contents of the manual. Tabs shall be provided to separate different types of documents, such as catalog ordering information, drawings, instructions, and spare-parts data. Index sheets shall be provided for each section of the manual when warranted by the quantity of documents included under separate tabs or dividers. Three additional copies of the instructions manual shall be provided within 30 calendar days following the manuals.

Three additional copies of the instructions manual within 30 calendar days following the approval of the manuals.

1.4 DELIVERY, STORAGE, AND HANDLING

Devices and equipment shall be visually inspected by the Contractor when received and prior to acceptance from conveyance. Stored items shall be protected from the environment in accordance with the manufacturer's published instructions. Damaged items shall be replaced. Oil filled transformers and switches shall be stored in accordance with the manufacturer's requirements. Wood poles held in storage for more than 2 weeks shall be stored in accordance with ANSI O5.1. Handling of wood poles shall be in accordance with ANSI O5.1, except that pointed tools capable of producing indentations more than inch in depth shall not be used. Metal poles shall be handled and stored in accordance with the manufacturer's instructions.

1.5 EXTRA MATERIALS

One additional spare fuse or fuse element for each furnished fuse or fuse element shall be delivered to the Contracting Officer when the electrical system is accepted. Two complete sets of all special tools required for maintenance shall be provided, complete with a suitable tool box. Special tools are those that only the manufacturer provides, for special purposes (to access compartments, or operate, adjust, or maintain special parts).

PART 2 PRODUCTS

2.1 GENERAL REQUIREMENTS

Products shall conform to the following requirements. Items of the same classification shall be identical including equipment, assemblies, parts, and components.

2.2 STANDARD PRODUCT

Material and equipment shall be the standard product of a manufacturer regularly engaged in the manufacture of the product and shall essentially duplicate items that have been in satisfactory use for at least 2 years prior to bid opening.

2.3 NAMEPLATES

2.3.1 General

Each major component shall have the manufacturer's name, address, type or style, model or serial number, and catalog number on a nameplate securely attached to the equipment. Equipment containing liquid-dielectrics shall have the type of dielectric on the nameplate. Nameplates shall be made of noncorrosive metal. As a minimum, nameplates shall be provided for transformers, regulators, circuit breakers, capacitors, meters and switches.

2.3.2 Liquid-Filled Transformer Nameplates

Power transformers shall be provided in accordance with IEEE C57.12.00. Nameplates shall indicate the number of gallons and composition of liquid-dielectric, and shall be permanently marked with a statement that the transformer dielectric to be supplied is non-polychlorinated biphenyl. If transformer nameplate is not so marked, the Contractor shall furnish manufacturer's certification for each transformer that the dielectric in non-PCB classified, with less than 2 ppm PCb content in accordance with paragraph LIQUID DIELECTRICS. Certifications shall be related to serial numbers on transformer nameplates. Transformer dielectric exceeding the 2 ppm PCB content or transformers without certification will be considered as PCB insulated and will not be accepted.

2.4 CORROSION PROTECTION

2.4.1 Aluminum Materials

Aluminum shall not be used in contact with earth or concrete. Where aluminum conductors are connected to dissimilar metal, fittings conforming to UL 486B shall be used.

2.4.2 Ferrous Metal Materials

2.4.2.1 Hardware

Ferrous metal hardware shall be hot-dip galvanized in accordance with ASTM A 153/A 153M and ASTM A 123/A 123M.

2.4.2.2 Equipment

Equipment and component items, including but not limited to transformers and ferrous metal luminaires not hot-dip galvanized or porcelain enamel finished, shall be provided with corrosion-resistant finishes which shall withstand 480 hours of exposure to the salt spray test specified in ASTM B 117 without loss of paint or release of adhesion of the paint primer coat to the metal surface in excess of 1/16 inch from the test mark. The described test mark and test evaluation shall be in accordance with ASTM D 1654 with a rating of not less than 7 in accordance with TABLE 1, (procedure A). Cut edges or otherwise damaged surfaces of hot-dip galvanized sheet steel or mill galvanized sheet steel shall be coated with a zinc rich paint conforming to the manufacturer's standard.

2.4.3 Finishing

Painting required for surfaces not otherwise specified and finish painting of items only primed at the factory shall be as recommended by the manufacturer.

2.5 CONDUCTORS, CONNECTORS, AND SPLICES

2.5.1 Aluminum-Composition Conductors

All-aluminum-conductors, AAC, shall be alloy 1350-H19 and comply with ASTM B 230 and ASTM B 231. All-aluminum-alloy-conductors, AAAC, shall be alloy 6201-T81 and comply with ASTM B 398 and ASTM B 399. Aluminum-conductor-steel-reinforced, ACSR, shall comply with ASTM B 232.

2.5.2 Copper Conductors

Hard-drawn-copper conductors shall comply with ASTM B 1 and ASTM B 8 as appropriate for the conductor size.

2.5.3 Connectors and Splices

Connectors and splices shall be of copper alloys for copper conductors, aluminum alloys for aluminum-composition conductors, and a type designed to minimize galvanic corrosion for copper to aluminum-composition conductors. Aluminum-composition and aluminum-composition to copper shall comply with UL 486B, and copper-to-copper shall comply with UL 486A.

2.6 MEDIUM-VOLTAGE LINES

2.6.1 Bare Medium-Voltage Lines

Bare medium-voltage line conductors shall be all-aluminum-conductor, AAC; all-aluminum-alloy-conductor, AAAC; aluminum-conductor-steel-reinforced, ACSR; or hard-drawn-copper, CU to match existing. Conductor types shall not be mixed on any project, unless specifically indicated. Conductors larger than No. 2 AWG shall be stranded.

2.6.2 Insulated Medium-Voltage Lines

Insulated medium-voltage line conductors shall be of the factory-assembled, messenger-supported type, having a rated circuit voltage of 15 kV, and a 133 percent insulation level. Conductor material shall be copper. Insulation shall be cross-linked thermosetting polyethylene (XLP) conforming to NEMA WC 7 or ethylene-propylene-rubber (EPR) conforming to NEMA WC 8. Messengers shall be zinc-coated steel, aluminum-clad-steel, copper-clad-steel, or composite-copper and copper-clad steel.

2.7 LOW-VOLTAGE LINES

Low-voltage line conductors shall be of the neutral-supported secondary and service drop type with cross-linked thermosetting polyethylene (XLP) insulation in accordance with NEMA WC 7 or weather-resistant polyolefin-covered type conforming to ICEA S-70-547. Neutral-supported secondary and service drop conductors shall be insulated copper with bare hard-drawn-copper or copper-clad steel neutrals. Conductors on secondary racks may be provided in lieu of neutral-supported cable for pole line circuits where necessary clearances are available.

2.8 POLES AND HARDWARE

Poles shall be of lengths and classes to match existing in the area .

2.8.1 Wood Poles

Wood poles shall comply with ANSI O5.1, and shall be pressure treated in accordance with AWPA C4, with creosote conforming to AWPA P1/P13or with oil-borne preservatives and petroleum conforming to AWPA P8 and AWPA P9, respectively, and waterborne preservatives conforming to AWPA P5. Waterborne preservatives shall be either chromated or ammoniacal copper arsenate. Any species listed in ANSI O5.1 for which a preservative treatment is not specified in AWPA C4, shall not be used; northern white cedar, if treated as specified for western red cedar, and western fir, if treated as specified for Douglas fir, may be used. Wood poles shall have pole markings located approximately 10 feet from pole butts for poles 50 feet or less in length, and 14 feet from the pole butts for poles longer than 55 feet in length. Poles shall be machine trimmed by turning smooth full length, and shall be roofed, gained, and bored prior to pressure treatment. Where poles are not provided with factory-cut gains, metal gain plates shall be provided.

2.8.2 Steel Poles

Steel poles shall be designed to withstand the loads specified in IEEE C2 multiplied by the appropriate overload capacity factors, shall be hot-dip galvanized in accordance with ASTM A 123/A 123M and shall not be painted. Poles shall have tapered tubular members, either round in cross-section or polygonal, and comply with strength calculations performed by a registered professional engineer. Calculations shall be submitted in accordance with the detail drawings portion of paragraph SUBMITTALS. Pole shafts shall be one piece. Poles shall be welded construction with no bolts, rivets, or other means of fastening except as specifically approved. Pole markings shall be approximately 3 to 4 feet above grade and shall include manufacturer, year of manufacture, top and bottom diameters, length, and a loading tree. Attachment requirements shall be provided as indicated, including grounding provisions. Climbing facilities are not required. Bases shall be of the anchor-bolt-mounted type.

2.8.3 Concrete Poles

Concrete poles shall be designed to withstand the loads specified in IEEE C2 multiplied by the appropriate overload capacity factors. Poles shall be reinforced or prestressed, either cast or spun. Spun poles shall be manufactured by a centrifugal spinning process with concrete pumped into a polished round tapered metal mold. Concrete for spun poles shall have a compressive strength of at least 5000 psi at 28 days; steel wire shall have an ultimate tensile strength of at least 120,000 psi; and reinforcing bars shall have an ultimate tensile strength of at least 40,000 psi. After the high speed spinning action is completed, a spun pole shall be cured by a suitable wet steam process. Spun poles shall have a water absorption of not greater than three percent to eliminate cracking and to prevent erosion. Concrete poles shall have hollow shafts. Poles shall have a hard, smooth, nonporous surface that is resistant to soil acids, road salts, and attacks of water and frost. Poles shall not be installed for at least 15 days after manufacture. Fittings and brackets that conform to the concrete pole design shall be provided. Poles shall conform to strength calculations performed by a registered professional engineer and submitted

in accordance with detail drawings portion of paragraph SUBMITTALS.

2.8.4 Pole Line Hardware

Zinc-coated hardware shall comply with ANSI C135.1, ANSI C135.2, ANSI C135.4, ANSI C135.14 ANSI C135.22. Steel hardware shall comply with ASTM A 575 and ASTM A 576. Hardware shall be hot-dip galvanized in accordance with ASTM A 153/A 153M. Pole-line hardware shall be hot-dip galvanized steel, except anchor rods of the copper-molten welded-to-steel type with nonferrous corrosion-resistant fittings shall be used. Washers shall be installed under boltheads and nuts on wood surfaces and elsewhere as required. Washers used on through-bolts and double-arming bolts shall be approximately 2-1/4 inches square and 3/16 inch thick. The diameter of holes in washers shall be the correct standard size for the bolt on which a washer is used. Washers for use under heads of carriage-bolts shall be of the proper size to fit over square shanks of bolts. Eye bolts, bolt eyes, eyenuts, strain-load plates, lag screws, guy clamps, fasteners, hooks, shims, and clevises shall be used wherever required to support and to protect poles, brackets, crossarms, guy wires, and insulators.

2.8.5 Armless Construction

Pole mounting brackets for line-post or pin insulators and eye bolts for suspension insulators shall be as shown. Brackets shall be attached to poles with a minimum of two bolts. Brackets may be either provided integrally as part of an insulator or attached to an insulator with a suitable stud. Bracket mounting surface shall be suitable for the shape of the pole. Brackets for wood poles shall have wood gripping members. Horizontal offset brackets shall have a 5-degree uplift angle. Pole top brackets shall conform to ANSI C135.22, except for modifications necessary to provide support for a line-post insulator. Brackets shall provide a strength exceeding that of the required insulator strength, but in no case less than a 2800 pound cantilever strength.

2.8.6 Guy Assemblies

Guy assemblies shall be aluminum-clad steel in accordance with ASTM B 416, copper-clad steel in accordance with ASTM B 228 or zinc-coated steel in accordance with ASTM A 475. Guy assemblies, including insulators and attachments, shall provide a strength exceeding the required guy strength. Three-eye thimbles shall be provided on anchor rods to permit attachment of individual primary, secondary, and communication down guys. Anchors shall provide adequate strength to support all loads. Guy strand shall be 7 strand. Guy material shall be Class 30 EHS copper-clad steel, Class B zinc-coated-steel high-strength grade or aluminum-clad-steel-strand, with a minimum breaking strength not less than 6000 pounds, except where two or more guys are used to provide the required strength. Guy rods shall be not less than 8 feet in length by 3/4 inch in diameter.

2.9 INSULATORS

Insulators shall comply with NEMA HV 2 for general requirements. Suspension insulators shall be used at corners, angles, dead-ends, other areas where line insulators do not provide adequate strength, and as indicated. Mechanical strength of suspension insulators and hardware shall exceed the rated breaking strength of the attached conductors.

2.9.1 Medium-Voltage Line Insulators

Medium-voltage line insulators shall comply with ANSI C29.2, ANSI C29.5, and ANSI C29.6, and as applicable. Ratings shall not be lower than the ANSI classes indicated in TABLE I. Horizontal line-post insulators shall be used for armless construction and shall have the same mechanical and electrical ratings as vertical line-post insulators for the ANSI class indicated, but shall be modified to be suitable for horizontal installation. Where line-post insulators are used for angles greater than 15 degrees, clamp-top fittings shall be provided as well as for other locations shown. Conductor clamps for use with clamp-top, line-post insulators shall be hot-dip galvanized malleable iron for copper conductors and aluminum alloy for aluminum-composition conductors. Either line-post or pin insulators may be used for crossarm construction. Pin insulators for use on voltages in excess of 6 kV phase-to-phase shall be radio-interference-freed or else line-post insulators shall be used.

TABLE I

MINIMUM ANSI RATING OF MEDIUM-VOLTAGE INSULATORS BY CLASS

Voltage Level	Line-Post	Pin	Suspension
Up to 5 kV	57-1 or 11	55-3	One 52-1
	57-1 or 11	55-5	Two 52-1
6 kV to 15 kV	57-1 or 11	55-5	Two 52-2
	57-2 or 12	56-3	Two 52-3 or 4
16 kV to 25 kV	57-2 or 12	56-3	Two 52-3 or 4
	57-3 or 13	56-4	Three 52-3 or 4
26 kV to 35 kV	57-3 or 13	56-4	Three 52-3 or 4
	57-4 or 14	56-5	Four 52-3 or 4

2.9.2 Low-Voltage Line Insulators

Low-voltage line insulators shall comply with ANSI C29.2 and ANSI C29.3 as applicable. Spool insulators for use on low-voltage lines shall be mounted on clevis attachments or secondary racks and shall be not smaller than Class 53-2. For No. 4/0 AWG and larger conductors, Class 53-4 shall be used. Suspension insulators on clevis attachments used at dead-ends shall be not smaller than Class 52-1.

2.9.3 Strain Insulators for Guy Wires

Strain insulators for use in insulated guy assemblies shall comply with ANSI C29.4 for porcelain or equivalent fiberglass, and shall have a mechanical strength exceeding the rated breaking strength of the attached guy wire. Insulators shall be not smaller than Class 54-1 for lines up to 5 kV, not smaller than Class 54-2 for lines of 6 kV to 15 kV, not smaller than Class 54-4 for lines of 16 kV to 25 kV, and not smaller than Class 54-4 with two in tandem for lines of 26 kV to 35 kV.

2.9.4 Apparatus Insulators

Apparatus insulators shall comply with IEEE C57.19, IEEE C57.19.01, ANSI C29.8, and ANSI C29.9 as applicable.

2.10 CROSSARM ASSEMBLIES

2.10.1 Crossarms

Crossarms shall comply with RUS Bull 1728H-701 and shall be solid wood, distribution type, except cross-sectional area with pressure treatment conforming to AWPA C25, and a 1/4 inch, 45 degree chamfer on all top edges. Cross-sectional area minimum dimensions shall be 4-1/4 inches in height by 3-l/4 inches in depth in accordance with IEEE C2 for Grade B construction. Crossarms shall be 8 feet in length, except that 10 foot crossarms shall be used for crossarm-mounted banked single-phase transformers or elsewhere as indicated. Crossarms shall be machined, chamfered, trimmed, and bored for stud and bolt holes before pressure treatment. Factory drilling shall be provided for pole and brace mounting, for four pin or four vertical line-post insulators, and for four suspension insulators, except where otherwise indicated or required. Drilling shall provide required climbing space and wire clearances. Crossarms shall be straight and free of twists to within 1/10 inch per foot of length. Bend or twist shall be in one direction only.

2.11 FUSES AND SWITCHES, MEDIUM-VOLTAGE

2.11.1 Fuse Cutouts

Medium-voltage fuses and cutouts shall comply with NEMA SG 2 and shall be of the loadbreak open type construction [rated 15 kV and of the heavy -duty type with ratings and types to match existing conditions. Open-link cut-outs are not acceptable. Fuses shall be either indicating or dropout type. Fuse ratings shall be as indicated. Fuse cutouts shall be equipped with mounting brackets suitable for the indicated installations.

2.12 TRANSFORMERS

Transformers shall comply with IEEE C57.12.00 for general requirements and ANSI C57.12.20 for specific requirements for overhead transformers. Overhead distribution transformers shall be of the outdoor type, mineral-oil-insulated liquid single-phase or three-phase as indicated and have two separate windings per phase. Transformers shall be provided with necessary auxiliary mounting devices suitable for the indicated installation. Transformers shall have four 2-1/2 percent rated kVA high-voltage taps below rated primary voltage. Transformer installations shall include one primary fuse cutout and one surge arrester for each ungrounded phase conductor. Self-protected transformers are not acceptable. Transformer tanks shall have a standard gray finish.

2.13 SURGE ARRESTERS

Surge arresters shall comply with NEMA LA 1 and IEEE C62.1, IEEE C62.2, and IEEE C62.11, and shall be provided for protection of aerial-to-underground transitions, transformers and other indicated equipment. Arresters shall be distribution class, rated as shown. Arresters shall be equipped with mounting brackets suitable for the indicated installations. Arresters shall be of the valve or metal-oxide varistor or combination valve-metal-oxide varistor type suitable for outdoor installations.

2.14 GROUNDING AND BONDING

2.14.1 Driven Ground Rods

Ground rods shall be of copper-clad steel conforming to UL 467 not less than 3/4 inch in diameter by 10 feet in length of the sectional type

driven full length into the earth.

2.14.2 Grounding Conductors

Grounding conductors shall be bare, except where installed in conduit with associated phase conductors. Insulated conductors shall be of the same material as the phase conductors and green color-coded, except that conductors shall be rated no more than 600 volts. Bare conductors shall be ASTM B 8 soft-drawn unless otherwise indicated. Aluminum is not acceptable.

2.15 WARNING SIGNS

Warning signs shall be porcelain enameled steel or approved equal. Voltage warning signs shall comply with IEEE C2.

2.16 LIQUID DIELECTRICS

Liquid dielectrics for transformers and other liquid-filled electrical equipment shall be non-polychlorinated biphenyl (PCB) mineral-oil or less-flammable liquid as specified. Nonflammable fluids shall not be used. Tetrachloroethylene (perchloroethylene) and 1, 2, 4 tetrachlorobenzene fluids shall not be used. Liquid dielectrics in retrofitted equipment shall be certified by the manufacturer as having less than 2 parts-per-million (ppm) PCB content. In lieu of the manufacturer's certification, the Contractor may submit a test sample of the dielectric in accordance with ASTM D 923 and have tests performed per ASTM D 4059 at a testing facility approved by the Contracting Officer. Equipment with test results indicating PCB level exceeding 2 ppm shall be replaced.

2.17 FACTORY TESTS

Factory tests shall be performed, as follows, in accordance with the applicable publications and with other requirements of these specifications. The Contracting Officer shall be notified at least 10 days before the equipment is ready for testing.

a. Transformers: Manufacturer's standard [routine] [design] [and] [other] tests in accordance with IEEE C57.12.00.

b. High-Voltage Fuses: Manufacturer's standard tests in accordance with IEEE C37.41.

c. Electric Power Insulators: Manufacturer's standard tests in accordance with ANSI C29.1.

PART 3 EXECUTION

3.1 GENERAL INSTALLATION REQUIREMENTS

Equipment and devices shall be installed and energized in accordance with the manufacturer's published instructions. Circuits installed in conduits or underground and splices and terminations for medium-voltage cable shall conform to the requirements of Section 16375 ELECTRICAL DISTRIBUTION SYSTEM, UNDERGROUND. Secondary circuits installed in conduit on poles shall conform to the requirements of Section 16415 ELECTRICAL WORK, INTERIOR.

3.1.1 Conformance to Codes

The installation shall comply with the requirements and recommendations of IEEE C2 for medium loading districts, Grade B construction. No reduction in clearance shall be made. The installation shall also comply with the applicable parts of NFPA 70 and California General Order No. 95..

3.1.2 Verification of Dimensions

The Contractor shall become familiar with details of the work, shall verify dimensions in the field, and shall notify the Contracting Officer of any discrepancy before performing any work.

3.1.3 Tree Trimming

Where lines pass through trees, trees shall be trimmed at least 15 feet clear on both sides horizontally and below for medium-voltage lines, and 5 feet clear on both sides horizontally and below for other lines, and no branch shall overhang horizontal clearances. Where trees are indicated to be removed to provide a clear right-of-way, clearing is specified in Section 02230 CLEARING AND GRUBBING.

3.1.4 Disposal of Liquid Dielectrics

PCB-contaminated dielectric shall be marked as PCB and transported to and incinerated by an approved EPA waste disposal facility. The Contractor shall furnish certification of proper disposal. Contaminated dielectric shall not be diluted to lower the level of contamination.

3.2 POLE INSTALLATION

Joint-use electric/roadway-lighting poles for overhead electric and communication lines shall be [wood] [steel] [concrete] poles utilizing armless or crossarm construction to match existing. Cross-arm mounted banked single-phase transformer installations shall be provided. Crossarm construction shall be provided for support of other equipment, except where direct-pole mounting is practical. Pole equipment mounts shall be used for steel and concrete poles and may be used for wood poles rather than crossarm equipment mounts. Detail drawings shall be submitted for approval. Provision for communication services is required on pole-line construction, except where specifically noted otherwise. A vertical pole space of not less than 2 feet shall be reserved at all locations.

3.2.1 Wood Pole Setting

Wood Pole Setting: Wood poles shall be set straight and firm. In normal firm ground, minimum pole-setting depths shall be as listed in Table II. In rocky or swampy ground, pole-setting depths shall be decreased or increased respectively in accordance with the local utility's published standards and as approved. In swampy or soft ground, a bog shoe shall be used where support for a pole is required. Poles in straight runs shall be in a straight line. Curved poles shall be placed with curvatures in the direction of the pole line. Poles shall be set to maintain as even a grade as practicable. When the average ground run is level, consecutive poles shall not vary more than 5 feet in height. When the ground is uneven, poles differing in length shall be kept to a minimum by locating poles to avoid the highest and lowest ground points. If it becomes necessary to shorten a pole, a piece shall be sawed off the top end and roofed. If any

pole is shortened after treatment, the shortened end of the pole shall be given an application of hot preservative. Where poles are set on hilly terrain, along edges of cuts or embankments, or where soil may be washed out, special precautions shall be taken to ensure durable pole foundations, and the setting depth shall be measured from the lower side of the pole. Holes shall be dug large enough to permit proper use of tampers to the full depth of a hole. Earth shall be placed into the hole in 6 inch maximum layers, then thoroughly tamped before the next layer is placed. Surplus earth shall be placed around each pole in a conical shape and packed tightly to drain water away from poles.

TABLE II

MINIMUM POLE-SETTING DEPTH (FEET)

Length Overall Feet	Straight Lines	Curves, Corners, and Points of Extra Strain
20	5.0	5.0
25	5.5	5.5
30	5.5	5.5
35	6.0	6.0
40	6.5	6.5
45	6.5	7.0
50	7.0	7.5
55	7.5	8.0
60	8.0	8.5
65	8.5	9.0
70	9.0	9.5
75	9.5	10.0
80	10.0	10.5
85	10.5	11.0
90	11.0	11.5
95	11.5	12.0
100	12.5	12.5

3.2.2 Aluminum, Steel, and Concrete Pole Setting

Poles shall be mounted on cast-in-place or power-installed screw foundations. Concrete poles shall be embedded in accordance with the details shown. Conduit elbows shall be provided for cable entrances into pole interiors.

3.2.2.1 Cast-In-Place Foundations

Concrete foundations, sized as indicated, shall have anchor bolts accurately set in foundations using templates supplied by the pole manufacturer. Concrete work and grouting is specified in Section 03300 CAST-IN-PLACE STRUCTURAL CONCRETE. After the concrete has cured, pole anchor bases shall be set on foundations and leveled by shimming between anchor bases and foundations or by setting anchor bases on leveling nuts and grouting. Poles shall be set plumb. Anchor bolts shall be the manufacturer's standard, and not less than necessary to meet the pole wind loading specified herein and other design requirements.

3.2.2.2 Power-Installed Screw Foundations

Power-installed screw foundations may be used if they have the required strength, mounting-bolt, and top plate dimensions. Screw foundations shall be of at least 1/4 inch thick structural steel conforming to ASTM A 36/A 36M and hot-dip galvanized in accordance with ASTM A 123/A 123M. Conduit slots in screw foundation shafts and top plates shall be marked to indicate orientation. Design calculations indicating adequate strength shall be approved before installation of screw foundation is permitted. Calculations shall be submitted in accordance with the detail drawings portion of paragraph SUBMITTALS.

3.3 CROSSARM MOUNTING

Crossarms shall be bolted to poles with 5/8 inchthrough-bolts with square washers at each end. Bolts shall extend not less than 1/8 inch nor more than 2 inches beyond nuts. On single crossarm construction, the bolt head shall be installed on the crossarm side of the pole. Metal crossarm braces shall be provided on crossarms. Flat braces may be provided for 8 foot crossarms and shall be 1/4 by 1-1/4 inches, not less than 28 inches in length. Flat braces shall be bolted to arms with 3/8 inch carriage bolts with round or square washers between boltheads and crossarms, and secured to poles with 1/2 by 4 inch lag screws after crossarms are leveled and aligned. Angle braces are required for 10 foot crossarms and shall be 60 inch span by 18 inch drop formed in one piece from 1-1/2 by 1-1/2 by 3/16 inch angle. Angle braces shall be bolted to crossarms with 1/2 inch bolts with round or square washers between boltheads and crossarms, and secured to poles with 5/8 inch through-bolts. Double crossarms shall be securely held in position by means of 5/8 inch double-arming bolts. Each double-arming bolt shall be equipped with four nuts and four square washers.

3.3.1 Line Arms and Buck Arms

Line arms and buck arms shall be set at right angles to lines for straight runs and for angles 45 degrees and greater; and line arms shall bisect angles of turns of less than 45 degrees. Dead-end assemblies shall be used for turns where shown. Buckarms shall be installed, as shown, at corners and junction poles. Double crossarms shall be provided at ends of joint use or conflict sections, at dead-ends, and at angles and corners to provide adequate vertical and longitudinal strength. Double crossarms shall be provided at each line-crossing structure and where lines not attached to the same pole cross each other.

3.3.2 Equipment Arms

Equipment arms shall be set parallel or at right angles to lines as required to provide climbing space. Equipment arms shall be located below line construction to provide necessary wire and equipment clearances.

3.4 GUY INSTALLATION

Guys shall be provided where shown, with loads and strengths as indicated, and wherever conductor tensions are not balanced, such as at angles, corners, and dead-ends. Where a single guy will not provide the required strength, two or more guys shall be provided. Where guys are wrapped around poles, at least two guy hooks shall be provided and pole shims shall be provided where guy tension exceeds 6000 pounds. Guy clamps 6 inches in length with three 5/8 inch bolts, or offset-type guy clamps, or approved guy grips shall be provided at each guy terminal. Guy-strain insulators shall be provided in each guy for wood poles. Multiple-helix screw anchors shall be provided in marshy ground; rock anchors shall be

installed in rock at right angles to guys, elsewhere anchors shall be of an expanding type, except that power installed screw anchors of equivalent holding power are acceptable. A half-round yellow polyvinyl, fiberglass, or other suitable plastic guy marker, not less than 8 feet in length, shall be provided at the anchor end of each guy shown, securely clamped to the guy or anchor at the bottom and top of the marker. Holding capacities for down guys shall be based on a lead angle of 45 degrees.

3.5 CONDUCTOR INSTALLATION

3.5.1 Line Conductors

Unless otherwise indicated, conductors shall be installed in accordance with manufacturer's approved tables of sags and tensions. Proper care shall be taken in handling and stringing conductors to avoid abrasions, sharp bends, cuts, kinks, or any possibility of damage to insulation or conductors. Conductors shall be paid out with the free end of conductors fixed and cable reels portable, except where terrain or obstructions make this method unfeasible. Bend radius for any insulated conductor shall not be less than the applicable NEMA specification recommendation. Conductors shall not be drawn over rough or rocky ground, nor around sharp bends. When installed by machine power, conductors shall be drawn from a mounted reel through stringing sheaves in straight lines clear of obstructions. Initial sag and tension shall be checked by the Contractor, in accordance with the manufacturer's approved sag and tension charts, within an elapsed time after installation as recommended by the manufacturer.

3.5.2 Connectors and Splices

Connectors and splices shall be mechanically and electrically secure under tension and shall be of the nonbolted compression type. The tensile strength of any splice shall be not less than the rated breaking strength of the conductor. Splice materials, sleeves, fittings, and connectors shall be noncorrosive and shall not adversely affect conductors. Aluminum-composition conductors shall be wire brushed and an oxide inhibitor applied before making a compression connection. Connectors which are factory-filled with an inhibitor are acceptable. Inhibitors and compression tools shall be of types recommended by the connector manufacturer. Primary line apparatus taps shall be by means of hot line clamps attached to compression type bail clamps (stirrups). Low-voltage connectors for copper conductors shall be of the solderless pressure type. Noninsulated connectors shall be smoothly taped to provide a waterproof insulation equivalent to the original insulation, when installed on insulated conductors. On overhead connections of aluminum and copper, the aluminum shall be installed above the copper.

3.5.3 Conductor-To-Insulator Attachments

Conductors shall be attached to insulators by means of clamps, shoes or tie wires, in accordance with the type of insulator. For insulators requiring conductor tie-wire attachments, tie-wire sizes shall be as indicated in TABLE II.

TABLE II

TIE-WIRE REQUIREMENTS

CONDUCTOR Copper (AWG)	TIE WIRE Soft-Drawn Copper (AWG)
6	8
4 and 2	6
1 through 3/0	4
4/0 and larger	2
AAC, AAAC, or ACSR (AWG)	AAAC OR AAC (AWG)
Any size	6 or 4

3.5.4 Armor Rods

Armor rods shall be provided for AAC, AAAC, and ACSR conductors. Armor rods shall be installed at supports, except armor rods will not be required at primary dead-end assemblies if aluminum or aluminum-lined zinc-coated steel clamps are used. Lengths and methods of fastening armor rods shall be in accordance with the manufacturer's recommendations. For span lengths of less than 200 feet, flat aluminum armor rods may be used. Flat armor rods, not less than 0.03 by 0.25 inch shall be used on No. 1 AWG AAC and AAAC and smaller conductors and on No. 5 AWG ACSR and smaller conductors. On larger sizes, flat armor rods shall be not less than 0.05 by 0.30 inches. For span lengths of 200 feet or more, preformed round armor rods shall be used.

3.5.5 Medium-Voltage Insulated Cables

Medium-voltage cable messengers shall be attached to poles with clamps providing a strength exceeding the required messenger strength and with not less than 5/8 inch through-bolts. Messengers shall be dead-ended, grounded, [and] [and storm and] line-guyed at corners and dead-ends, and at intervals not exceeding 1000 feet along straight runs.

3.5.6 Low-Voltage Insulated Cables

Low-voltage cables shall be supported on clevis fittings using spool insulators. Dead-end clevis fittings and suspension insulators shall be provided where required for adequate strength. Dead-end construction shall provide a strength exceeding the rated breaking strength of the neutral messenger. Clevis attachments shall be provided with not less than 5/8 inch through-bolts. Secondary racks may be used when installed on wood poles and where the span length does not exceed 200 feet. Secondary racks shall be two-, three-, or four-wire, complete with spool insulators. Racks shall meet strength and deflection requirements for heavy-duty steel racks, and shall be either galvanized steel or aluminum alloy. Tops of insulator saddles shall be rounded and smooth to avoid damage to conductor insulation. Each insulator shall be held in place with a 5/8 inch button-head bolt equipped with a nonferrous cotter pin, or equivalent, at the bottom. Racks for dead-ending four No. 4/0 AWG or four larger conductors shall be attached to poles with three 5/8 inch through-bolts. Other secondary racks shall be attached to poles with at least two 5/8 inch through-bolts. Minimum vertical spacing between conductors shall not be

less than 8 inches.

3.6 TRANSFORMER INSTALLATION

Transformers shall be carefully installed so as not to scratch finishes or damage bushings. Transformers shall be installed in accordance with the manufacturer's instructions. After installation, surfaces shall be inspected and scratches shall be touched up with a finish provided by the transformer manufacturer for this purpose.

3.7 CONNECTIONS TO UTILITY LINES

The Contractor shall coordinate the work with the Contracting Officer and shall provide for final connections to the installation electric lines.

3.8 CONNECTIONS BETWEEN AERIAL AND UNDERGROUND SYSTEMS

Connections between aerial and underground systems shall be made as shown. Underground cables shall be extended up poles in conduit to cable terminations. Conduits shall be secured to poles by two-hole galvanized steel pipe straps spaced not more than 10 feet apart and with one support not more than 12 inches from any bend or termination. Cables shall be supported by devices separate from the conduit or guard, near their point of exit from the riser conduit or guard. Cables guards shall be secured in accordance with the manufacturers published procedure. Risers shall be equipped with bushings to protect cables. Capnut potheads shall be used to terminate medium-voltage multiple-conductor cable.

3.9 GROUNDING

Noncurrent-carrying metal parts of equipment and conductor assemblies, such as luminaires, medium-voltage cable terminations and messengers, metal poles, operating mechanisms of pole top switches, panel enclosures, transformers, capacitors, recloser frames (cases) and other noncurrent-carrying metal items shall be grounded. Additional grounding of equipment, neutral, and surge arrester grounding systems shall be installed at poles where indicated.

3.9.1 Grounding Electrodes

Grounding electrodes shall be installed as follows:

a. Driven rod electrodes - Unless otherwise indicated, ground rods shall be located approximately 3 feet out from base of the pole and shall be driven into the earth until the tops of the rods are approximately 1 foot below finished grade. Multiple rods shall be evenly spaced at least 10 feet apart and connected together 2 feet below grade with a minimum No. 6 bare copper conductor.

b. Pole butt electrodes - Pole butt electrodes shall be installed where indicated, except that this method shall not be the sole grounding electrode at transformer locations. The pole butt electrode shall consist of a coil of at least 12 feet of minimum No. 6 bare copper conductor stapled to the butt of the pole.

c. Plate electrodes - Plate electrodes shall be installed in accordance with the manufacturer's instructions and IEEE C2 and NFPA 70.

d. Ground Resistance - The maximum resistance of a driven ground rod shall not exceed 25 ohms under normally dry conditions. Whenever the required ground resistance is not met, provide additional electrodes interconnected with grounding conductors, to achieve the specified ground resistance. The additional electrodes will be up to three, 10 feet rods spaced a minimum of 10 feet apart, a single extension-type rod, 3/4 inch diameter, up to 30 feetlong, driven perpendicular to grade, coupled and driven with the first rod. In high ground resistance, UL listed chemically charged ground rods may be used. If the resultant resistance exceeds 25 ohms measured not less than 48 hours after rainfall, the Contracting Officer shall be notifies immediately. Connections below grade shall be fusion welded. Connections above grade shall be fusion welded or shall use UL 467 approved connectors.

3.9.2 Grounding and Bonding Connections

Connections above grade shall be made by the fusion-welding process or with bolted solderless connectors in compliance with UL 467, and those below grade shall be made by a fusion-welding process. Where grounding conductors are connected to aluminum-composition conductors, specially treated or lined copper-to-aluminum connectors suitable for this purpose shall be used.

3.9.3 Grounding Electrode Conductors

On multi-grounded circuits, as defined in IEEE C2, provide a single continuous vertical grounding electrode conductor. Neutrals, surge arresters, and equipment grounding conductors shall be bonded to this conductor. For single grounded or ungrounded systems, provide a grounding conductor for the surge arrester and equipment grounding conductors and a separate grounding conductor for the secondary neutrals. Grounding electrode conductors shall be sized as shown. Secondary system neutral conductors shall be connected directly to the transformer neutral bushings, then connected with a neutral bonding jumper between the transformer neutral bushing and the vertical grounding electrode conductor, as shown. Grounding electrode conductors shall be stapled to wood poles at intervals not exceeding 2 feet. On metal poles, a preformed galvanized steel strap, 5/8 inch wide by 22 gauge minimum by length, secured by a preformed locking method standard with the manufacturer, shall be used to support a grounding electrode conductor installation on the pole and spaced at intervals not exceeding 5 feet with one band not more than 3 inches from each end of the vertical grounding electrode conductor. Bends greater than 45 degrees in grounding electrode conductor are not permitted.

3.10 FIELD TESTING

3.10.1 General

Field testing shall be performed in the presence of the Contracting Officer. The Contractor shall notify the Contracting Officer 14 days prior to conducting tests. The Contractor shall furnish materials, labor, and equipment necessary to conduct field tests. The Contractor shall perform tests and inspections recommended by the manufacturer unless specifically waived by the Contracting Officer. The Contractor shall maintain a written record of tests which includes date, test performed, personnel involved, devices tested, serial number and name of test equipment, and test results. Field reports will be signed and dated by the Contractor.

3.10.2 Safety

The Contractor shall provide and use safety devices such as rubber gloves, protective barriers, and danger signs to protect and warn personnel in the test vicinity. The Contractor shall replace any devices or equipment which are damaged due to improper test procedures or handling.

3.10.3 Ground-Resistance Tests

The resistance of each grounding electrode system shall be measured using the fall-of-potential method defined in IEEE Std 81. Ground resistance measurements shall be made before the electrical distribution system is energized and shall be made in normally dry conditions not less than 48 hours after the last rainfall. Resistance measurements of separate grounding electrode systems shall be made before the systems are bonded together below grade. The combined resistance of separate systems may be used to meet the required resistance, but the specified number of electrodes shall be provided.

3.10.4 Low-Voltage Cable Test

For underground secondary or service laterals from overhead lines, the low-voltage cable, complete with splices, shall be tested for insulation resistance after the cables are installed, in their final configuration, ready for connection to the equipment, and prior to energization. The test voltage shall be 500 volts dc, applied for one minute between each conductor and ground and between all possible combinations of conductors in the same trench, duct, or cable, with other conductors in the same trench, duct, or conduit. The minimum value of insulation shall be:

R in megohms = (rated voltage in kV + 1) x 1000/(length of cable in feet)

Each cable failing this test shall be repaired or replaced. The repaired cable shall then be retested until failures have been eliminated.

3.10.5 Operating Tests

After the installation is completed, and at such time as the Contracting Officer may direct, the Contractor shall conduct operating tests for approval. The equipment shall be demonstrated to operate in accordance with the specified requirements. An operating test report shall be submitted in accordance with paragraph SUBMITTALS.

3.11 ACCEPTANCE

Final acceptance of the facility will not be given until the Contractor has successfully completed all tests and after all defects in installation, material or operation have been corrected.

-- End of Section --

SECTION TABLE OF CONTENTS

DIVISION 16 - ELECTRICAL

SECTION 16375

ELECTRICAL DISTRIBUTION SYSTEM, UNDERGROUND

PART 1 GENERAL

1.1 REFERENCES
1.2 GENERAL REQUIREMENTS
1.2.1 Terminology
1.2.2 Service Conditions
1.3 SUBMITTALS
1.4 DELIVERY, STORAGE, AND HANDLING
1.5 EXTRA MATERIALS

PART 2 PRODUCTS

2.1 STANDARD PRODUCT
2.2 NAMEPLATES
2.2.1 General
2.2.2 Liquid-Filled Transformer Nameplates
2.3 CORROSION PROTECTION
2.3.1 Aluminum Materials
2.3.2 Ferrous Metal Materials
2.3.2.1 Hardware
2.3.2.2 Equipment
2.3.3 Finishing
2.4 CABLES
2.4.1 Medium-Voltage Cables
2.4.1.1 General
2.4.1.2 Ratings
2.4.1.3 Conductor Material
2.4.1.4 Insulation
2.4.1.5 Shielding
2.4.1.6 Neutrals
2.4.1.7 Jackets
2.4.2 Low-Voltage Cables
2.4.2.1 Conductor Material
2.4.2.2 Insulation
2.4.2.3 Jackets
2.4.2.4 In Duct
2.5 CABLE JOINTS, TERMINATIONS, AND CONNECTORS
2.5.1 Medium-Voltage Cable Joints
2.5.2 Medium-Voltage Separable Insulated Connectors
2.5.3 Low-Voltage Cable Splices
2.5.4 Terminations
2.5.4.1 Factory Preformed Type
2.5.4.2 Taped Terminations
2.6 CONDUIT AND DUCTS
2.6.1 Metallic Conduit
2.6.2 Nonmetallic Ducts

2.6.2.1 Bituminized Fiber Duct
2.6.2.2 Concrete Encased Ducts
2.6.2.3 Direct Burial
2.6.3 Conduit Sealing Compound
2.7 MANHOLES, HANDHOLES, AND PULLBOXES
2.8 POLES AND HARDWARE
2.9 TRANSFORMERS
2.9.1 Pad-Mounted Transformers
2.9.1.1 High-Voltage Compartments
2.9.1.2 Load-Break Switch
2.9.1.3 Transformer Tank Sections
2.9.1.4 Low-Voltage Cable Compartments
2.9.1.5 Accessories
2.10 METERING AND PROTECTIVE DEVICES
2.10.1 Circuit Breakers, Low-Voltage
2.10.1.1 Molded-Case Circuit Breakers
2.10.2 Fuses, Medium-Voltage, Including Current-Limiting
2.10.2.1 Construction
2.10.2.2 Ratings
2.10.2.3 E-Rated, Current-Limiting Power Fuses
2.10.2.4 C-Rated, Current-Limiting Power Fuses
2.10.3 Fuses, Low-Voltage, Including Current-Limiting
2.10.3.1 Cartridge Fuses
2.10.3.2 Transformer Circuit Fuses
2.10.4 Instrument Transformers
2.10.4.1 General
2.10.4.2 Current Transformers
2.10.4.3 Current Transformers for Kwh and Demand Metering (Low-Voltage)
2.10.4.4 Voltage Transformers
2.10.5 Watthour Meters
2.11 SURGE ARRESTERS
2.12 GROUNDING AND BONDING
2.12.1 Driven Ground Rods
2.12.2 Grounding Conductors
2.13 CONCRETE AND REINFORCEMENT
2.14 PADLOCKS
2.15 CABLE FIREPROOFING SYSTEMS
2.15.1 Fireproof Coating
2.15.2 Fireproofing Tape
2.15.3 Plastic Tape
2.16 LIQUID DIELECTRICS
2.17 FACTORY TESTS
2.18 FENCING

PART 3 EXECUTION

3.1 GENERAL INSTALLATION REQUIREMENTS
3.1.1 Conformance to Codes
3.1.2 Verification of Dimensions
3.1.3 Disposal of Liquid Dielectrics
3.2 CABLE INSTALLATION
3.2.1 Cable Installation Plan and Procedure
3.2.1.1 Cable Inspection
3.2.1.2 Duct Cleaning
3.2.1.3 Duct Lubrication
3.2.1.4 Cable Installation
3.2.1.5 Cable Installation Plan
3.2.2 Duct Line

3.2.3 Electric Manholes
3.3 CABLE JOINTS
3.4 FIREPROOFING
3.4.1 Tape Method
3.4.2 Sprayable Method
3.5 DUCT LINES
3.5.1 Requirements
3.5.2 Treatment
3.5.3 Concrete Encasement
3.5.4 Nonencased Direct-Burial
3.5.5 Installation of Couplings
3.5.5.1 Bituminized-Fiber Ducts
3.5.5.2 Plastic Duct
3.5.6 Duct Line Markers
3.6 MANHOLES, HANDHOLES, AND PULLBOXES
3.6.1 General
3.6.2 Electric Manholes
3.6.3 Communications Manholes
3.6.4 Handholes
3.6.5 Pullboxes
3.6.6 Ground Rods
3.7 PAD-MOUNTED EQUIPMENT INSTALLATION
3.7.1 Concrete Pads
3.7.1.1 Construction
3.7.1.2 Concrete and Reinforcement
3.7.1.3 Sealing
3.7.2 Padlocks
3.7.3 Fencing
3.8 CONNECTIONS BETWEEN AERIAL AND UNDERGROUND SYSTEMS
3.8.1 Pole Installation
3.9 CONNECTIONS TO BUILDINGS
3.10 GROUNDING
3.10.1 Grounding Electrodes
3.10.2 Grounding and Bonding Connections
3.10.3 Grounding and Bonding Conductors
3.10.4 Surge Arrester Grounding
3.10.5 Manhole, Handhole, or Concrete Pullbox Grounding
3.10.6 Riser Pole Grounding
3.11 FIELD TESTING
3.11.1 General
3.11.2 Safety
3.11.3 Ground-Resistance Tests
3.11.4 Medium-Voltage Cable Test
3.11.5 Low-Voltage Cable Test
3.11.6 Liquid-Filled Transformer Tests
3.11.7 Circuit Breaker Tests
3.11.8 Operating Tests
3.12 ACCEPTANCE

-- End of Section Table of Contents --

SECTION 16375

ELECTRICAL DISTRIBUTION SYSTEM, UNDERGROUND

PART 1 GENERAL

1.1 REFERENCES

The publications listed below form a part of this specification to the extent referenced. The publications are referred to in the text by basic designation only.

AMERICAN NATIONAL STANDARDS INSTITUTE (ANSI)

ANSI C12.4	(1984; R 1996) Mechanical Demand Registers
ANSI C12.10	(1987) Electromechanical Watthour Meters
ANSI C12.11	(1987; R 1993) Instrument Transformers for Revenue Metering, 10 kV BIL through 350 kV BIL (0.6 kV NSV through 69 kV NSV)
ANSI C29.1	(1988; R 1996) Electrical Power Insulators - Test Methods
ANSI C37.16	(1988; C37.16a; R 1995) Low-Voltage Power Circuit Breakers and AC Power Circuit Protectors - Preferred Ratings, Related Requirements, and Application Recommendations
ANSI C37.46	(1981; R 1992) Power Fuses and Fuse Disconnecting Switches
ANSI C37.50	(1989; R 1995) Switchgear, Low-Voltage AC Power Circuit Breakers Used in Enclosures - Test Procedures
ANSI C37.72	(1987) Manually-Operated Dead-Front, Padmounted Switchgear with Load-Interrupting Switches and Separable Connectors for Alternating-Current Systems
ANSI C37.121	(1989; R 1995) Switchgear, Unit Substations Requirements
ANSI C57.12.13	(1982) Conformance Requirements for Liquid-Filled Transformers Used in Unit Installations, Including Unit Substations
ANSI C57.12.21	(1995) Requirements for Pad-Mounted, Compartmental-Type, Self-Cooled, Single-Phase Distribution Transformers with High-Voltage Bushings; (High-Voltage,

	34 500 Grd Y/19 920 Volts and Below; Low-Voltage, 240/120; 167 kVA and Smaller)
ANSI C57.12.26	(1993) Pad-Mounted Compartmental-Type, Self-Cooled, Three-Phase Distribution Transformers for Use with Separable Insulated High-Voltage Connectors, High-Voltage, 34 500 Grd Y/19 920 Volts and Below; 2500 kVa and Smaller
ANSI C57.12.27	(1982) Conformance Requirements for Liquid-Filled Distribution Transformers Used in Pad-Mounted Installations, Including Unit Substations
ANSI C57.12.28	(1996) Switchgear and Transformers - Padmounted Equipment - Enclosure Integrity
ANSI C80.1	(1995) Rigid Steel Conduit - Zinc Coated
ANSI C119.1	(1986) Sealed Insulated Underground Connector Systems Rated 600 Volts
ANSI C135.30	(1988) Zinc-Coated Ferrous Ground Rods for Overhead or Underground Line Construction
ANSI O5.1	(1992) Specifications and Dimensions for Wood Poles

AMERICAN SOCIETY FOR TESTING AND MATERIALS (ASTM)

ASTM A 48	(1994a) Gray Iron Castings
ASTM A 123/A 123M	(1997a) Zinc (Hot-Dip Galvanized) Coatings on Iron and Steel Products
ASTM A 153/A 153M	(1995) Zinc Coating (Hot-Dip) on Iron and Steel Hardware
ASTM B 3	(1995) Soft or Annealed Copper Wire
ASTM B 8	(1993) Concentric-Lay-Stranded Copper Conductors, Hard, Medium-Hard, or Soft
ASTM B 117	(1997) Operating Salt Spray (Fog) Apparatus
ASTM B 231	(1995) Concentric-Lay-Stranded Aluminum 1350 Conductors
ASTM B 400	(1994) Compact Round Concentric-Lay-Stranded Aluminum 1350 Conductors
ASTM B 496	(1992) Compact Round Concentric-Lay-Stranded Copper Conductors
ASTM B 609	(1997) Aluminum 1350 Round Wire, Annealed and Intermediate Tempers, for Electrical Purposes

ASTM B 609M	(1991) Aluminum 1350 Round Wire, Annealed and Intermediate Tempers, for Electrical Purposes (Metric)
ASTM B 800	(1994) 8000 Series Aluminum Alloy Wire for Electrical Purposes - Annealed and Intermediate Tempers
ASTM B 801	(1995) Concentric-Lay-Stranded Conductors of 8000 Series Aluminum Alloy for Subsequent Covering or Insulation
ASTM C 478	(1997) Precast Reinforced Concrete Manhole Sections
ASTM C 478M	(1997) Precast Reinforced Concrete Mahhole Sections (Metric)
ASTM D 923	(1991) Sampling Electrical Insulating Liquids
ASTM D 1654	(1992) Evaluation of Painted or Coated Specimens Subjected to Corrosive Environments
ASTM D 2472	(1992) Sulfur Hexafluoride
ASTM D 4059	(1996) Analysis of Polychlorinated Biphenyls in Insulating Liquids by Gas Chromatography
ASTM F 883	(1990) Padlocks

ASSOCIATION OF EDISON ILLUMINATING COMPANIES (AEIC)

AEIC CS5	(1994) Cross-linked Polyethylene Insulated Shielded Power Cables Rated 5 Through 46 kV
AEIC CS6	(1996) Ethylene Propylene Rubber Insulated Shielded Power Cables Rated 5 Through 69 kV

FACTORY MUTUAL ENGINEERING AND RESEARCH (FM)

FM P7825a	(1998) Approval Guide Fire Protection

INSTITUTE OF ELECTRICAL AND ELECTRONICS ENGINEERS (IEEE)

IEEE C2	(1997) National Electrical Safety Code
IEEE ANSI/IEEE C37.1	(1994) IEEE Standard Definition, Specification, and Analysis of Systems Used for Supervisory Control, Data Acquisition, and Automatic Control
IEEE ANSI/IEEE C37.2	(1996) Electrical Power System Device Function Numbers and Contact Designations
IEEE ANSI/IEEE C37.13	(1990; R 1995) Low-Voltage AC Power

	Circuit Breakers Used in Enclosures
IEEE ANSI/IEEE C37.20.1	(1993) Metal-Enclosed Low-Voltage Power Circuit-Breaker Switchgear
IEEE ANSI/IEEE C37.20.2	(1993; C37.20.2b) Metal-Clad and Station-Type Cubicle Switchgear
IEEE ANSI/IEEE C37.20.3	(1987; R 1992) Metal-Enclosed Interrupter Switchgear
IEEE ANSI/IEEE C37.23	(1987; R 1991) Guide for Metal-Enclosed Bus and Calculating Losses in Isolated-Phase Bus
IEEE ANSI/IEEE C37.30	(1997)Requirements for High-Voltage Switches
IEEE ANSI/IEEE C37.34	(1994) Test Code for High-Voltage Air Switches
IEEE ANSI/IEEE C37.41	(1994; C37.41e) Design Tests for High-Voltage Fuses, Distribution Enclosed Single-Pole Air Switches, Fuse Disconnecting Switches, and Accessories
IEEE ANSI/IEEE C37.63	(1997) Requirements for Overhead, Pad-Mounted, Dry-Vault, and Submersible Automatic Line Sectionalizer for AC Systems
IEEE ANSI/IEEE C37.90	(1989; R 1994) Relays and Relay Systems Associated with Electric Power Apparatus
IEEE ANSI/IEEE C37.90.1	(1989; R 1994) IEEE Standard Surge Withstand Capability (SWC) Tests for Protective Relays and Relay Systems
IEEE ANSI/IEEE C37.98	(1987; R 1990) Seismic Testing of Relays
IEEE ANSI/IEEE C57.12.00	(1993) IEEE Standard General Requirements for Liquid-Immersed Distribution, Power, and Regulating Transformers
IEEE ANSI/IEEE C57.13	(1993) Instrument Transformers
IEEE ANSI/IEEE C57.98	(1993) Guide for Transformer Impulse Tests
IEEE C62.1	(1989; R 1994) Surge Arresters for AC Power Circuits
IEEE C62.2	(1987; R 1994) Guide for the Application of Gapped Silicon-Carbide Surge Arresters for Alternating Current Systems
IEEE C62.11	(1993) IEEE Standard Metal-Oxide Surge Arresters for AC Power Circuits
IEEE Std 48	(1996) Standard Test Procedures and Requirements for Alternating-Current Cable

	Terminations 2.5 kV through 765 kV
IEEE Std 81	(1983) Guide for Measuring Earth Resistivity, Ground Impedance, and Earth Surface Potentials of a Ground System (Part 1)
IEEE Std 100	(1996) IEEE Standard Dictionary of Electrical and Electronics Terms
IEEE Std 242	(1986; R 1991) Recommended Practice for Protection and Coordination of Industrial and Commercial Power Systems
IEEE Std 386	(1995) Separable Insulated Connector Systems for Power Distribution Systems Above 600V
IEEE Std 399	(1997) Recommended Practice for Industrial and Commercial Power Systems Analysis
IEEE Std 404	(1993; errata) Cable Joints for Use with Extruded Dielectric Cable Rated 5000 V through 138 000 V and Cable Joints for Use with Laminated Dielectric Cable Rated 2500 V Through 500 000 V
IEEE Std 592	(1990; R 1996) Exposed Semiconducting Shields on Premolded High Voltage Cable Joints and Separable Insulated Connectors

NATIONAL ELECTRICAL MANUFACTURERS ASSOCIATION (NEMA)

NEMA AB 1	(1993) Molded Case Circuit Breakers and Molded Case Switches
NEMA BU 1	(1994) Busways
NEMA FB 1	(1993) Fittings, Cast Metal Boxes and Conduit Bodies for Conduit and Cable Assemblies
NEMA FU 1	(1986) Low Voltage Cartridge Fuses
NEMA LA 1	(1992) Surge Arresters
NEMA PB 1	(1990) Panelboards
NEMA PB 2	(1995) Deadfront Distribution Switchboards
NEMA SG 2	(1993) High Voltage Fuses
NEMA SG 3	(1995) Power Switching Equipment
NEMA SG 5	(1990) Power Switchgear Assemblies
NEMA TC 5	(1990) Corrugated Polyolefin Coilable Plastic Utilities Duct

NEMA TC 6	(1990) PVC and ABS Plastic Utilities Duct for Underground Installation
NEMA TC 7	(1990) Smooth-Wall Coilable Polyethylene Electrical Plastic Duct
NEMA WC 7	(1991; Rev 1) Cross-Linked-Thermosetting-Polyethylene-Insulated Wire and Cable for the Transmission and Distribution of Electrical Energy
NEMA WC 8	(1991; Rev 1; Rev 2) Ethylene-Propylene-Rubber-Insulated Wire and Cable for the Transmission and Distribution of Electrical Energy

NATIONAL FIRE PROTECTION ASSOCIATION (NFPA)

NFPA 70	(1999) National Electrical Code

UNDERWRITERS LABORATORIES (UL)

UL 6	(1997) Rigid Metal Conduit
UL 198C	(1986; Rev thru Feb 1998) High-Interrupting-Capacity Fuses, Current-Limiting Types
UL 198D	(1995) Class K Fuses
UL 198E	(1988; Rev Jul 1988) Class R Fuses
UL 198H	(1988; Rev thru Nov 1993) Class T Fuses
UL 467	(1993; Rev thru Aug 1996) Grounding and Bonding Equipment
UL 486A	(1997) Wire Connectors and Soldering Lugs for Use with Copper Conductors
UL 486B	(1997; Rev Jun 1997) Wire Connectors for Use with Aluminum Conductors
UL 489	(1996; Rev thru Nov 1997) Molded-Case Circuit Breakers, Molded-Case Switches, and Circuit-Breaker Enclosures
UL 510	(1994; Rev thru Nov 1997) Polyvinyl Chloride, Polyethylene and Rubber Insulating Tape
UL 514A	(1996; Rev Jul 1998) Metallic Outlet Boxes
UL 651	(1995; Rev thru Oct 1998) Schedule 40 and 80 Rigid PVC Conduit
UL 854	(1996; Rev Apr 1998) Service-Entrance Cables

UL 857	(1994; Rev thru Nov 1996) Busways and Associated Fittings
UL 1072	(1995; Rev Mar 1998) Medium-Voltage Power Cable
UL 1242	(1996; Rev Apr 1997) Intermediate Metal Conduit
UL 1684	(1996) Reinforced Thermosetting Resin Conduit (RTRC) and Fittings

1.2 GENERAL REQUIREMENTS

1.2.1 Terminology

Terminology used in this specification is as defined in IEEE Std 100.

1.2.2 Service Conditions

Items provided under this section shall be specifically suitable for the following service conditions. Seismic details shall [conform to Sections 13080 SEISMIC PROTECTION FOR MISCELLANEOUS EQUIPMENT and 16070 SEISMIC PROTECTION FOR ELECTRICAL EQUIPMENT] [be as indicated].

a. Altitude 2300 feet feet

b. Ambient Temperature 104 degrees F degrees F

c. Seismic Parameters Zone 4

1.3 SUBMITTALS

Governmental approval is required for submittals with a "GA" designation; submittals having an "FIO" designation are for information only. The following shall be submitted in accordance with Section 01330 SUBMITTAL PROCEDURES:

SD-01 Data

Fault Current and Protective Devices Coordination Studies; GA.

The study shall be submitted with protective device equipment submittals. No time extension or similar contract modifications will be granted for work arising out of the requirements for this study. Approval of protective devices proposed shall be based on recommendations of this study. The Government shall not be held responsible for any changes to equipment, device ratings, settings, or additional labor for installation of equipment or devices ordered and/or procured prior to approval of the study.

Manufacturer's Catalog Data; FIO.

Catalog cuts, brochures, circulars, specifications, product data, and printed information in sufficient detail and scope to verify compliance with the requirements of the contract documents.

Material, Equipment, and Fixture Lists; FIO.

A complete itemized listing of equipment and materials proposed for incorporation into the work. Each entry shall include an item number, the quantity of items proposed, and the name of the manufacturer of each such item.

Installation Procedures; FIO.

As a minimum, installation procedures for transformers, substations, switchgear, and medium-voltage cable terminations and splices.

Procedures shall include cable pulling plans, diagrams, instructions, and precautions required to install, adjust, calibrate, and test the devices and equipment.

SD-04 Drawings

Electrical Distribution System; FIO.

Detail drawings consisting of equipment drawings, illustrations, schedules, instructions, diagrams manufacturers standard installation drawings and other information necessary to define the installation and enable the Government to check conformity with the requirements of the contract drawings.

If departures from the contract drawings are deemed necessary by the Contractor, complete details of such departures shall be included with the detail drawings. Approved departures shall be made at no additional cost to the Government.

Detail drawings shall show how components are assembled, function together and how they will be installed on the project. Data and drawings for component parts of an item or system shall be coordinated and submitted as a unit. Data and drawings shall be coordinated and included in a single submission. Multiple submissions for the same equipment or system are not acceptable except where prior approval has been obtained from the Contracting Officer. In such cases, a list of data to be submitted later shall be included with the first submission. Detail drawings shall consist of the following:

a. Detail drawings showing physical arrangement, construction details, connections, finishes, materials used in fabrication, provisions for conduit or busway entrance, access requirements for installation and maintenance, physical size, electrical characteristics, foundation and support details, and equipment weight. Drawings shall be drawn to scale and/or dimensioned. All optional items shall be clearly identified as included or excluded.

b. Internal wiring diagrams of equipment showing wiring as actually provided for this project. External wiring connections shall be clearly identified.

Detail drawings shall as a minimum depict the installation of the following items:

a. Medium-voltage cables and accessories including cable installation plan.

b. Transformers.

c. Surge arresters.

As-Built Drawings; FIO.

The as-built drawings shall be a record of the construction as installed. The drawings shall include the information shown on the contract drawings as well as deviations, modifications, and changes from the contract drawings, however minor. The as-built drawings shall be a full sized set of prints marked to reflect deviations, modifications, and changes. The as-built drawings shall be complete and show the location, size, dimensions, part identification, and other information. Additional sheets may be added. The as-built drawings shall be jointly inspected for accuracy and completeness by the Contractor's quality control representative and by the Contracting Officer prior to the submission of each monthly pay estimate. Upon completion of the work, the Contractor shall provide three full sized sets of the marked prints to the Contracting Officer for approval. If upon review, the as-built drawings are found to contain errors and/or omissions, they will be returned to the Contractor for correction. The Contractor shall correct and return the as-built drawings to the Contracting Officer for approval within 10 calendar days from the time the drawings are returned to the Contractor.

SD-09 Reports

Factory Test; FIO.

Certified factory test reports shall be submitted when the manufacturer performs routine factory tests, including tests required by standards listed in paragraph REFERENCES. Results of factory tests performed shall be certified by the manufacturer, or an approved testing laboratory, and submitted within 7 days following successful completion of the tests. The manufacturer's pass-fail criteria for tests specified in paragraph FIELD TESTING shall be included.

Field Testing; FIO.

A proposed field test plan, 30 days prior to testing the installed system. No field test shall be performed until the test plan is approved. The test plan shall consist of complete field test procedures including tests to be performed, test equipment required, and tolerance limits.

Test Reports; FIO.

Six copies of the information described below in 8-1/2 by 11 inch binders having a minimum of three rings, including a separate section for each test. Sections shall be separated by heavy plastic dividers with tabs.

a. A list of equipment used, with calibration certifications.

b. A copy of measurements taken.

c. The dates of testing.

d. The equipment and values to be verified.

e. The condition specified for the test.

f. The test results, signed and dated.

g. A description of adjustments made.

Cable Installation Reports; FIO.

Six copies of the information described below in 8-1/2 by 11 inch binders having a minimum of three rings from which material may readily be removed and replaced, including a separate section for each cable pull. Sections shall be separated by heavy plastic dividers with tabs, with all data sheets signed and dated by the person supervising the pull.

a. Site layout drawing with cable pulls numerically identified.

b. A list of equipment used, with calibration certifications. The manufacturer and quantity of lubricant used on pull.

c. The cable manufacturer and type of cable.

d. The dates of cable pulls, time of day, and ambient temperature.

e. The length of cable pull and calculated cable pulling tensions.

f. The actual cable pulling tensions encountered during pull.

SD-13 Certificates

Materials and Equipment; FIO.

Where materials or equipment are specified to conform to the standards of the Underwriters Laboratories (UL) or to be constructed or tested, or both, in accordance with the standards of the American National Standards Institute (ANSI), the Institute of Electrical and Electronics Engineers (IEEE), or the National Electrical Manufacturers Association (NEMA), the Contractor shall submit proof that the items provided conform to such requirements. The label of, or listing by, UL will be acceptable as evidence that the items conform. Either a certification or a published catalog specification data statement, to the effect that the item is in accordance with the referenced ANSI or IEEE standard, will be acceptable as evidence that the item conforms. A similar certification or published catalog specification data statement to the effect that the item is in accordance with the referenced NEMA standard, by a company listed as a member company of NEMA, will be acceptable as evidence that the item conforms. In lieu of such certification or published data, the Contractor may submit a certificate from a recognized testing agency equipped and competent to perform such services, stating that the items have been tested and that they conform to the requirements listed, including methods of testing of the specified agencies. Compliance with above-named requirements does not relieve the Contractor from compliance with any other requirements of the specifications.

Cable Splicer Qualification; FIO.

A certification that contains the names and the qualifications of people recommended to perform the splicing and termination of medium-voltage cables approved for installation under this contract. The certification shall indicate that any person recommended to perform actual splicing and terminations has been adequately trained in the proper techniques and have had at least three recent years of experience in splicing and terminating

the same or similar types of cables approved for installation. In addition, any person recommended by the Contractor may be required to perform a practice splice and termination, in the presence of the Contracting Officer, before being approved as a qualified installer of medium-voltage cables. If that additional requirement is imposed, the Contractor shall provide short sections of the approved types of cables along with the approved type of splice and termination kits, and detailed manufacturer's instruction for the proper splicing and termination of the approved cable types.

Cable Installer Qualifications; FIO.

The Contractor shall provide at least one onsite person in a supervisory position with a documentable level of competency and experience to supervise all cable pulling operations. A resume shall be provided showing the cable installers' experience in the last three years, including a list of references complete with points of contact, addresses and telephone numbers.

SD-19 OPERATION AND MAINTENANCE MANUALS

Electrical Distribution System; FIO.

Six copies of operation and maintenance manuals, within 7 calendar days following the completion of tests and including assembly, installation, operation and maintenance instructions, spare parts data which provides supplier name, current cost, catalog order number, and a recommended list of spare parts to be stocked. Manuals shall also include data outlining detailed procedures for system startup and operation, and a troubleshooting guide which lists possible operational problems and corrective action to be taken. A brief description of all equipment, basic operating features, and routine maintenance requirements shall also be included. Documents shall be bound in a binder marked or identified on the spine and front cover. A table of contents page shall be included and marked with pertinent contract information and contents of the manual. Tabs shall be provided to separate different types of documents, such as catalog ordering information, drawings, instructions, and spare parts data. Index sheets shall be provided for each section of the manual when warranted by the quantity of documents included under separate tabs or dividers.

Three additional copies of the instructions manual shall be provided within 30 calendar days following the manuals.

1.4 DELIVERY, STORAGE, AND HANDLING

Devices and equipment shall be visually inspected by the Contractor when received and prior to acceptance from conveyance. Stored items shall be protected from the environment in accordance with the manufacturer's published instructions. Damaged items shall be replaced. Oil filled transformers and switches shall be stored in accordance with the manufacturer's requirements. Wood poles held in storage for more than 2 weeks shall be stored in accordance with ANSI O5.1. Handling of wood poles shall be in accordance with ANSI O5.1, except that pointed tools capable of producing indentations more than 1 inch in depth shall not be used. Metal poles shall be handled and stored in accordance with the manufacturer's instructions.

1.5 EXTRA MATERIALS

One additional spare fuse or fuse element for each furnished fuse or fuse element shall be delivered to the contracting officer when the electrical system is accepted. Two complete sets of all special tools required for maintenance shall be provided, complete with a suitable tool box. Special tools are those that only the manufacturer provides, for special purposes (to access compartments, or operate, adjust, or maintain special parts).

PART 2 PRODUCTS

2.1 STANDARD PRODUCT

Material and equipment shall be the standard product of a manufacturer regularly engaged in the manufacture of the product and shall essentially duplicate items that have been in satisfactory use for at least 2 years prior to bid opening. Items of the same classification shall be identical including equipment, assemblies, parts, and components.

2.2 NAMEPLATES

2.2.1 General

Each major component of this specification shall have the manufacturer's name, address, type or style, model or serial number, and catalog number on a nameplate securely attached to the equipment. Nameplates shall be made of noncorrosive metal. Equipment containing liquid dielectrics shall have the type of dielectric on the nameplate. Sectionalizer switch nameplates shall have a schematic with all switch positions shown and labeled. As a minimum, nameplates shall be provided for transformers, circuit breakers, meters, switches, and switchgear.

2.2.2 Liquid-Filled Transformer Nameplates

Power transformers shall be provided with nameplate information in accordance with IEEE ANSI/IEEE C57.12.00. Nameplates shall indicate the number of gallons and composition of liquid-dielectric, and shall be permanently marked with a statement that the transformer dielectric to be supplied is non-polychlorinated biphenyl. If transformer nameplate is not so marked, the Contractor shall furnish manufacturer's certification for each transformer that the dielectric is non-PCB classified, with less than 2 ppm PCB content in accordance with paragraph LIQUID DIELECTRICS. Certifications shall be related to serial numbers on transformer nameplates. Transformer dielectric exceeding the 2 ppm PCB content or transformers without certification will be considered as PCB insulated and will not be accepted.

2.3 CORROSION PROTECTION

2.3.1 Aluminum Materials

Aluminum shall not be used in contact with earth or concrete. Where aluminum conductors are connected to dissimilar metal, fittings conforming to UL 486B shall be used.

2.3.2 Ferrous Metal Materials

2.3.2.1 Hardware

Ferrous metal hardware shall be hot-dip galvanized in accordance with ASTM A 153/A 153M and ASTM A 123/A 123M.

2.3.2.2 Equipment

Equipment and component items, including but not limited to transformer stations and ferrous metal luminaries not hot-dip galvanized or porcelain enamel finished, shall be provided with corrosion-resistant finishes which shall withstand 480 hours of exposure to the salt spray test specified in ASTM B 117 without loss of paint or release of adhesion of the paint primer coat to the metal surface in excess of 1/16 inch from the test mark. The scribed test mark and test evaluation shall be in accordance with ASTM D 1654 with a rating of not less than 7 in accordance with TABLE 1, (procedure A). Cut edges or otherwise damaged surfaces of hot-dip galvanized sheet steel or mill galvanized sheet steel shall be coated with a zinc rich paint conforming to the manufacturer's standard.

2.3.3 Finishing

Painting required for surfaces not otherwise specified and finish painting of items only primed at the factory shall be as specified in Section 09900 PAINTING, GENERAL.

2.4 CABLES

Cables shall be single conductor type unless otherwise indicated.

2.4.1 Medium-Voltage Cables

2.4.1.1 General

Cable construction shall be Type MV, conforming to NFPA 70 and UL 1072 concentric neutral underground distribution cable conforming to AEIC CS5 and NEMA WC 7, with insulation and shielding, as specified, using [a galvanized steel or an aluminum interlocked tape armor and thermoplastic jacket. Cables shall be manufactured for use in duct applications.

2.4.1.2 Ratings

Cables shall be rated for a circuit voltage of 15 kV or as indicated.

2.4.1.3 Conductor Material

Underground cables shall be soft drawn copper complying with ASTM B 3 and ASTM B 8 for regular concentric and compressed stranding or ASTM B 496 for compact stranding or aluminum alloy 1350, 3/4 hard minimum complying with ASTM B 609, ASTM B 609M and ASTM B 231 for regular concentric and compressed stranding or ASTM B 400 for compacted stranding.

2.4.1.4 Insulation

Cable insulation shall be cross-linked thermosetting polyethylene (XLP) insulation conforming to the requirements of NEMA WC 7 and AEIC CS5 or ethylene-propylene-rubber (EPR) insulation conforming to the requirements of NEMA WC 8 and AEIC CS6. A 133 percent insulation level shall be used on 15 kV and 25 kV rated cables.

2.4.1.5 Shielding

Cables rated for 2 kV and above shall have a semiconducting conductor shield, a semiconducting insulation shield, and an overall copper tape

shield for each phase. The shield tape shall be sized to meet IEEE C2 requirements for a ground fault availability of 5000 amperes.

2.4.1.6 Neutrals

Neutral conductors of shall be copper employing the same insulation and jacket materials as phase conductors, except that a 600-volt insulation rating is acceptable.

2.4.1.7 Jackets

Cables shall be provided with a PVC or polyethylene jacket. Direct buried cables shall be rated for direct burial.

2.4.2 Low-Voltage Cables

Cables shall be rated 600 volts and shall conform to the requirements of NFPA 70, and must be UL listed for the application or meet the applicable section of either ICEA or NEMA standards.

2.4.2.1 Conductor Material

Underground cables shall be annealed copper complying with ASTM B 3 and ASTM B 8 or Type AA-8000 aluminum conductors complying with ASTM B 800 and ASTM B 801. Intermixing of copper and aluminum conductors is not permitted.

2.4.2.2 Insulation

Insulation must be in accordance with NFPA 70, and must be UL listed for the application or meet the applicable sections of either ICEA, or NEMA standards.

2.4.2.3 Jackets

Multiconductor cables shall have an overall PVC outer jacket.

2.4.2.4 In Duct

Cables shall be single-conductor cable, in accordance with NFPA 70.

2.5 CABLE JOINTS, TERMINATIONS, AND CONNECTORS

2.5.1 Medium-Voltage Cable Joints

Medium-voltage cable joints shall comply with IEEE Std 404 and IEEE Std 592. Medium-voltage cable terminations shall comply with IEEE Std 48. Joints shall be the standard products of a manufacturer and shall be either of the factory preformed type or of the kit type containing tapes and other required parts. Joints shall have ratings not less than the ratings of the cables on which they are installed. Splice kits may be of the heat-shrinkable type for voltages up to 15 kV, of the premolded splice and connector type, the conventional taped type, or the resin pressure-filled overcast taped type for voltages up to 35 kV; except that for voltages of 7.5 kV or less a resin pressure-filled type utilizing a plastic-tape mold is acceptable. Joints used in manholes, handholes, vaults and pull boxes shall be certified by the manufacturer for waterproof, submersible applications.

2.5.2 Medium-Voltage Separable Insulated Connectors

Separable insulated connectors shall comply with IEEE Std 386 and IEEE Std 592 and shall be of suitable construction or standard splice kits shall be used. Separable insulated connectors are acceptable for voltages up to 35 kV. Connectors shall be of the loadbreak type as indicated, of suitable construction for the application and the type of cable connected, and shall include cable shield adaptors. Separable insulated connectors shall not be used as substitutes for conventional permanent splices. External clamping points and test points shall be provided.

2.5.3 Low-Voltage Cable Splices

Low-voltage cable splices and terminations shall be rated at not less than 600 Volts. Splices in conductors No. 10 AWG and smaller shall be made with an insulated, solderless, pressure type connector, conforming to the applicable requirements of UL 486A. Splices in conductors No. 8 AWG and larger shall be made with noninsulated, solderless, pressure type connector, conforming to the applicable requirements of UL 486A and UL 486B. Splices shall then be covered with an insulation and jacket material equivalent to the conductor insulation and jacket. Splices below grade or in wet locations shall be sealed type conforming to ANSI C119.1 or shall be waterproofed by a sealant-filled, thick wall, heat shrinkable, thermosetting tubing or by pouring a thermosetting resin into a mold that surrounds the joined conductors.

2.5.4 Terminations

Terminations shall be in accordance with IEEE Std 48, Class 1 or Class 2; of the molded elastomer, wet-process porcelain, prestretched elastomer, heat-shrinkable elastomer, or taped type. Acceptable elastomers are track-resistant silicone rubber or track-resistant ethylene propylene compounds, such as ethylene propylene rubber or ethylene propylene diene monomer. Separable insulated connectors may be used for apparatus terminations, when such apparatus is provided with suitable bushings. Terminations shall be of the outdoor type, except that where installed inside outdoor equipment housings which are sealed against normal infiltration of moisture and outside air, indoor, Class 2 terminations are acceptable. Class 3 terminations are not acceptable. Terminations, where required, shall be provided with mounting brackets suitable for the intended installation and with grounding provisions for the cable shielding, metallic sheath, and armor.

2.5.4.1 Factory Preformed Type

Molded elastomer, wet-process porcelain, prestretched, and heat-shrinkable terminations shall utilize factory preformed components to the maximum extent practicable rather than tape build-up. Terminations shall have basic impulse levels as required for the system voltage level. Leakage distances shall comply with wet withstand voltage test requirements of IEEE Std 48 for the next higher Basic Insulation Level (BIL) level. Anti-tracking tape shall be applied over exposed insulation of preformed molded elastomer terminations.

2.5.4.2 Taped Terminations

Taped terminations shall use standard termination kits providing terminal connectors, field-fabricated stress cones, and rain hoods. Terminations shall be at least 20 inches long from the end of the tapered cable jacket to the start of the terminal connector, or not less than the kit

manufacturer's recommendations, whichever is greater.

2.6 CONDUIT AND DUCTS

Ducts shall be single, round-bore type, with wall thickness and fittings suitable for the application. Where indicated, duct lines shall be concrete-encased, thin-wall type or nonencased direct-burial, thick-wall type.

2.6.1 Metallic Conduit

Intermediate metal conduit shall comply with UL 1242. Rigid galvanized steel conduit shall comply with UL 6 and ANSI C80.1. Metallic conduit fittings and outlets shall comply with UL 514A and NEMA FB 1.

2.6.2 Nonmetallic Ducts

2.6.2.1 Bituminized Fiber Duct

UL 1684 for Type I (Thinwall) or Type II (Thickwall).

2.6.2.2 Concrete Encased Ducts

UL 651 Schedule 40 or NEMA TC 6 Type EB.

2.6.2.3 Direct Burial

UL 651 Schedule 40 and Schedule 80 as indicated, or NEMA TC 6 Type DB.

2.6.3 Conduit Sealing Compound

Compounds for sealing ducts and conduit shall have a putty-like consistency workable with the hands at temperatures as low as 35 degrees F, shall neither slump at a temperature of 300 degrees F, nor harden materially when exposed to the air. Compounds shall adhere to clean surfaces of fiber or plastic ducts; metallic conduits or conduit coatings; concrete, masonry, or lead; any cable sheaths, jackets, covers, or insulation materials; and the common metals. Compounds shall form a seal without dissolving, noticeably changing characteristics, or removing any of the ingredients. Compounds shall have no injurious effect upon the hands of workmen or upon materials.

2.7 MANHOLES, HANDHOLES, AND PULLBOXES

Manholes, handholes, and pullboxes shall be as indicated. Strength of manholes, handholes, and pullboxes and their frames and covers shall conform to the requirements of IEEE C2. Precast-concrete manholes shall have the required strength established by ASTM C 478, ASTM C 478M. Frames and covers shall be made of gray cast iron and a machine-finished seat shall be provided to ensure a matching joint between frame and cover. Cast iron shall comply with ASTM A 48, Class 30B, minimum. Handholes for low voltage cables installed in parking lots, sidewalks, and turfed areas shall be fabricated from an aggregate consisting of sand and with continuous woven glass strands having an overall compressive strength of at least 10,000 psi and a flexural strength of at least5,000 psi. Pullbox and handhole covers in sidewalks, and turfed areas shall be of the same material as the box. Concrete pullboxes shall consist of precast reinforced concrete boxes, extensions, bases, and covers.

2.8 POLES AND HARDWARE

Poles and hardware shall be in accordance with Section 16370 ELECTRICAL DISTRIBUTION SYSTEM, AERIAL.

2.9 TRANSFORMERS

Transformers shall be of the outdoor type having the ratings and arrangements indicated. Medium-voltage ratings of cable terminations shall be rated for 133 percent insulation level.

2.9.1 Pad-Mounted Transformers

Pad-mounted transformers shall comply with ANSI C57.12.26 and shall be of the radial feed type. Pad-mounted transformer stations shall be assembled and coordinated by one manufacturer and each transformer station shall be shipped as a complete unit so that field installation requirements are limited to mounting each unit on a concrete pad and connecting it to primary and secondary lines. Stainless steel pins and hinges shall be provided. Barriers shall be provided between high- and low-voltage compartments. High-voltage compartment doors shall be interlocked with low-voltage compartment doors to prevent access to any high-voltage section unless its associated low-voltage section door has first been opened. Compartments shall be sized to meet the specific dimensional requirements of ANSI C57.12.26. Pentahead locking bolts shall be provided with provisions for a padlock.

2.9.1.1 High-Voltage Compartments

The high-voltage compartment shall be dead-front construction. Primary switching and protective devices shall include loadbreak switching, drawout, dry-well-mounted, current-limiting fuses , medium-voltage separable loadbreak connectors, universal bushing wells and inserts or integral one piece bushings and surge arresters. Fuses shall comply with the requirements of paragraph METERING AND PROTECTIVE DEVICES. The switch shall be mounted inside transformer tank with switch operating handle located in high-voltage compartment and equipped with metal loop for hook stick operation. Fuses shall be interlocked with switches so that fuses can be removed only when the associated switch is in the "OPEN" position. Adjacent to medium-voltage cable connections, a nameplate or equivalent stencilled inscription shall be provided inscribed "DO NOT OPEN CABLE CONNECTORS UNLESS SWITCH IS OPEN." Surge arresters shall be fully insulated and configured to terminate on the same bushing as the primary cable by means of a loadbreak, feed-through bushing insert.

2.9.1.2 Load-Break Switch

Radial-feed oil-immersed type rated at 15 kV, 95 kV BIL, with a continuous current rating and load-break rating of 200 ampere, and a make-and-latch rating of 10,000 rms amperes symmetrical. Locate the switch handle in the high-voltage compartment.]

2.9.1.3 Transformer Tank Sections

Transformers shall comply with IEEE ANSI/IEEE C57.12.00, ANSI C57.12.21, and ANSI C57.12.26 and shall be of the mineral oil-insulated type . Transformers shall be suitable for outdoor use and shall have 2 separate windings per phase. Standard NEMA primary taps shall be provided. Where primary taps are not specified, 4, 2-1/2 percent rated kVA high-voltage

taps shall be provided 2 above and 2 below rated, primary voltage. Operating handles for primary tap changers for de-energized operation shall be located within high-voltage compartments, externally to transformer tanks. Adjacent to the tap changer operating handle, a nameplate or equivalent stenciled inscription shall be provided and inscribed "DO NOT OPERATE UNDER LOAD." Transformer ratings at 60 Hz shall be as indicated.

2.9.1.4 Low-Voltage Cable Compartments

Neutrals shall be provided with fully-insulated bushings. Clamp type cable terminations, suitable for copper conductors entering from below, shall be provided as necessary.

2.9.1.5 Accessories

High-voltage warning signs shall be permanently attached to each side of transformer stations. Voltage warning signs shall comply with IEEE C2. Copper-faced steel or stainless steel ground connection pads shall be provided in both the high- and low-voltage compartments. Dial-type thermometer, liquid-level gauge, and drain valve with built-in sampling device shall be provided for each transformer station. Insulated-bushing-type parking stands shall be provided adjacent to each separable load-break elbow to provide for cable isolation during sectionalizing operations.

2.10 METERING AND PROTECTIVE DEVICES

2.10.1 Circuit Breakers, Low-Voltage

2.10.1.1 Molded-Case Circuit Breakers

NEMA AB 1 and UL 489.

2.10.2 Fuses, Medium-Voltage, Including Current-Limiting

2.10.2.1 Construction

Units shall be suitable for outdoor use. Fuses shall have integral blown-fuse indicators. All ratings shall be clearly visible.

2.10.2.2 Ratings

Expulsion-type power fuses shall have ratings in accordance with ANSI C37.46.

2.10.2.3 E-Rated, Current-Limiting Power Fuses

E-rated, current-limiting, power fuses shall conform to ANSI C37.46.

2.10.2.4 C-Rated, Current-Limiting Power Fuses

C-rated, current-limiting power fuses shall open in 1000 seconds at currents between 170 and 240 percent of the C rating.

2.10.3 Fuses, Low-Voltage, Including Current-Limiting

Low-voltage fuses shall conform to NEMA FU 1. Time delay and nontime delay options shall be as specified. Equipment provided under this contract shall be provided with a complete set of properly rated fuses when the

equipment manufacturer utilizes fuses in the manufacture of the equipment, or if current-limiting fuses are required to be installed to limit the ampere-interrupting capacity of circuit breakers or equipment to less than the maximum available fault current at the location of the equipment to be installed. Fuses shall have a voltage rating of not less than the phase-to-phase circuit voltage, and shall have the time-current characteristics required for effective power system coordination.

2.10.3.1 Cartridge Fuses

Cartridge fuses, current-limiting type, Class RK1, RK5, or T shall have tested interrupting capacity not less than 100,000 amperes. Fuse holders shall be the type that will reject Class H fuses.

2.10.3.2 Transformer Circuit Fuses

Transformer circuit fuses shall be Class RK1 or RK5, current-limiting, time-delay with 200,000 amperes interrupting capacity.

2.10.4 Instrument Transformers

2.10.4.1 General

Instrument transformers shall comply with ANSI C12.11 and IEEE ANSI/IEEE C57.13. Instrument transformers shall be configured for mounting in/on the device to which they are applied. Polarity marks on instrument transformers shall be visually evident and shown on drawings.

2.10.4.2 Current Transformers

Unless otherwise indicated, bar, wound, or window-type transformers are acceptable; and except for window-type units installed over insulated buses, transformers shall have a BIL rating consistent with the rated BIL of the associated switchgear or electric power apparatus bushings, buses or conductors. Current transformers shall have the indicated ratios. Other thermal and mechanical ratings of current transformers and their primary leads shall be coordinated with the design of the circuit breaker and shall be not less than the momentary rating of the associated circuit breaker. Circuit protectors shall be provided across secondary leads of the current transformers to prevent the accident open-circuiting of the transformers while energized. Each terminal of each current transformer shall be connected to a short-circuiting terminal block in the circuit interrupting mechanism cabinet, power transformer terminal cabinet, and in the associated instrument and relay cabinets.

2.10.4.3 Current Transformers for Kwh and Demand Metering (Low-Voltage)

Current transformers shall conform to IEEE ANSI/IEEE C57.13. Provide current transformers with a metering accuracy Class of 0.3 through 0.6, with a minimum RF of [_____] at 30 degrees C, with 600-volt insulations, and 10 kV BIL. Provide butyl-molded, window-type current transformers mounted on the transformer low-voltage bushings.

2.10.4.4 Voltage Transformers

Voltage transformers shall have indicated ratios. Voltage transformers shall be of the drawout type having current-limiting fuses in both primary and secondary circuits. Mechanical interlocks shall prevent removal of

fuses, unless the associated voltage transformer is in a drawout position. Voltage transformer compartments shall have hinged doors.

2.10.5 Watthour Meters

Watthour meters shall conform to ANSI C12.10, except numbered terminal wiring sequence and case size may be the manufacturer's standard. Watthour meters shall be of the socket mounted outdoor type having a 30 minute, cumulative form, demand register meeting ANSI C12.4 and provided with not less than 2-1/2 stators. Watthour demand meters shall have factory-installed electronic pulse initiators. Pulse initiators shall be solid-state devices incorporating light-emitting diodes, phototransistors, and power transistors, except that mercury-wetted output contacts are acceptable. Initiators shall be totally contained within watthour demand meter enclosures, shall be capable of operating up to speeds of 500 pulses per minute with no false pulses, and shall require no field adjustments. Initiators shall be calibrated for a pulse rate output of 1 pulse per 1/4 disc revolution of the associated meter and shall be compatible with the indicated equipment.

2.11 SURGE ARRESTERS

Surge arresters shall comply with NEMA LA 1, IEEE C62.1, IEEE C62.2, and IEEE C62.11 and shall be provided where indicated. Arresters shall be distribution class, rated as shown. Arresters for use at elevations in excess of 6000 feet above mean sea level shall be specifically rated for that purpose. Arresters shall be equipped with mounting brackets suitable for the indicated installations. Arresters shall be of the valve or metal-oxide varistor or combination valve-metal-oxide varistor type.

2.12 GROUNDING AND BONDING

2.12.1 Driven Ground Rods

Ground rods shall be copper-clad steel conforming to UL 467not less than 3/4 inch in diameter by 10 feet in length. Sectional type rods may be used.

2.12.2 Grounding Conductors

Grounding conductors shall be bare, except where installed in conduit with associated phase conductors. Insulated conductors shall be of the same material as phase conductors and green color-coded, except that conductors shall be rated no more than 600 volts. Bare conductors shall be ASTM B 8 soft-drawn unless otherwise indicated. Aluminum is not acceptable.

2.13 CONCRETE AND REINFORCEMENT

Concrete work shall have minimum 3000 psi compressive strength and conform to the requirements of Section 03300 CAST-IN-PLACE STRUCTURAL CONCRETE. Concrete reinforcing shall be as specified in Section 03200 CONCRETE REINFORCEMENT.

2.14 PADLOCKS

Padlocks shall comply with Section 08700 'Builders' Hardware

2.15 CABLE FIREPROOFING SYSTEMS

Cable fireproofing systems shall be listed in FM P7825a as a fire-protective coating or tape approved for grouped electrical conductors and shall be suitable for application on the type of medium-voltage cables provided. After being fully cured, materials shall be suitable for use where exposed to oil, water, gases, salt water, sewage, and fungus and shall not damage cable jackets or insulation. Asbestos materials are not acceptable.

2.15.1 Fireproof Coating

Cable fireproofing coatings shall be compounded of water-based thermoplastic resins, flame-retardant chemicals, and inorganic noncombustible fibers and shall be suitable for the application methods used. Coatings applied on bundled cables shall have a derating factor of less than 5 percent, and a dielectric strength of 95 volts per mil minimum after curing.

2.15.2 Fireproofing Tape

Fireproofing tape shall be at least 2 inches wide and shall be a flexible, conformable, polymeric, elastomer tape designed specifically for fireproofing cables.

2.15.3 Plastic Tape

Preapplication plastic tape shall be pressure sensitive, 10 mil thick, conforming to UL 510.

2.16 LIQUID DIELECTRICS

Liquid dielectrics for transformers, capacitors, reclosers, and other liquid-filled electrical equipment shall be non-polychlorinated biphenyl (PCB) mineral-oil or less-flammable liquid as specified. Nonflammable fluids shall not be used. Tetrachloroethylene (perchloroethylene) and 1, 2, 4 trichlorobenzene fluids shall not be used. Liquid dielectrics in retrofitted equipment shall be certified by the manufacturer as having less than 2 parts per million (ppm) PCB content. In lieu of the manufacturer's certification, the Contractor may submit a test sample of the dielectric in accordance with ASTM D 923 and have tests performed per ASTM D 4059 at a testing facility approved by the Contracting Officer. Equipment with test results indicating PCB level exceeding 2 ppm shall be replaced.

2.17 FACTORY TESTS

Factory tests shall be performed, as follows, in accordance with the applicable publications and with other requirements of these specifications. The Contracting Officer shall be notified at least 10 days before the equipment is ready for testing. The Contracting Officer reserves the right to witness the tests.

a. Transformers: Manufacturer's standard [routine] [design] [and] [other] tests in accordance with IEEE ANSI/IEEE C57.12.00.

b. Transformers rated 200 kVA and above: Reduced full-wave, chopped-wave, and full-wave impulse test on each line and neutral terminal, in accordance with IEEE ANSI/IEEE C57.98.

c. High-Voltage Air Switches: Manufacturer's standard tests in accordance with IEEE ANSI/IEEE C37.34 and IEEE ANSI/IEEE C37.41.

d. Factory Preformed Terminations: Wet withstand voltage tests in accordance with IEEE Std 48 for the next higher BIL level.

2.18 FENCING

Fencing shall conform to the requirements of Section 02821 CHAIN LINK FENCE.

PART 3 EXECUTION

3.1 GENERAL INSTALLATION REQUIREMENTS

Equipment and devices shall be installed and energized in accordance with the manufacturer's published instructions. Circuits installed aerially shall conform to the requirements of Section 16370 ELECTRICAL DISTRIBUTION SYSTEM, AERIAL. Steel conduits installed underground shall be installed and protected from corrosion in conformance with the requirements of Section 16415 ELECTRICAL WORK, INTERIOR. Except as covered herein, excavation, trenching, and backfilling shall conform to the requirements of Section 02316 EXCAVATION, TRENCHING, AND BACKFILLING FOR UTILITIES SYSTEMS. Concrete work shall have minimum 3000 psi compressive strength and conform to the requirements of Section 03300 CAST-IN-PLACE STRUCTURAL CONCRETE.

3.1.1 Conformance to Codes

The installation shall comply with the requirements and recommendations of NFPA 70, IEEE C2, and California G.O. 128 as applicable.

3.1.2 Verification of Dimensions

The Contractor shall become familiar with details of the work, shall verify dimensions in the field, and shall advise the Contracting Officer of any discrepancy before performing any work.

3.1.3 Disposal of Liquid Dielectrics

PCB-contaminated dielectrics must be marked as PCB and transported to and incinerated by an approved EPA waste disposal facility. The Contractor shall furnish certification of proper disposal. Contaminated dielectrics shall not be diluted to lower the contamination level.

3.2 CABLE INSTALLATION

The Contractor shall obtain from the manufacturer an installation manual or set of instructions which addresses such aspects as cable construction, insulation type, cable diameter, bending radius, cable temperature, lubricants, coefficient of friction, conduit cleaning, storage procedures, moisture seals, testing for and purging moisture, etc. The Contractor shall then prepare a checklist of significant requirements which shall be submitted along with the manufacturers instructions in accordance with SUBMITTALS.

3.2.1 Cable Installation Plan and Procedure

Cable shall be installed strictly in accordance with the cable manufacturer's recommendations. Each circuit shall be identified by means of a fiber, laminated plastic, or non-ferrous metal tags, or approved

equal, in each manhole, handhole, junction box, and each terminal. Each tag shall contain the following information; cable type, conductor size, circuit number, circuit voltage, cable destination and phase identification.

3.2.1.1 Cable Inspection

The cable reel shall be inspected for correct storage positions, signs of physical damage, and broken end seals. If end seal is broken, moisture shall be removed from cable in accordance with the cable manufacturer's recommendations.

3.2.1.2 Duct Cleaning

Duct shall be cleaned with an assembly that consists of a flexible mandrel (manufacturers standard product in lengths recommended for the specific size and type of duct) that is 1/4 inch less than inside diameter of duct, 2 wire brushes, and a rag. The cleaning assembly shall be pulled through conduit a minimum of 2 times or until less than a volume of 8 cubic inches of debris is expelled from the duct.

3.2.1.3 Duct Lubrication

The cable lubricant shall be compatible with the cable jacket for cable that is being installed. Application of lubricant shall be in accordance with lubricant manufacturer's recommendations.

3.2.1.4 Cable Installation

The Contractor shall provide a cable feeding truck and a cable pulling winch as required. The Contractor shall provide a pulling grip or pulling eye in accordance with cable manufacturer's recommendations. The pulling grip or pulling eye apparatus shall be attached to polypropylene or manilla rope followed by lubricant front end packs and then by power cables. A dynamometer shall be used to monitor pulling tension. Pulling tension shall not exceed cable manufacturer's recommendations. The Contractor shall not allow cables to cross over while cables are being fed into duct. For cable installation in cold weather, cables shall be kept at 50 degrees F temperature for at least 24 hours before installation.

3.2.1.5 Cable Installation Plan

The Contractor shall submit a cable installation plan for all cable pulls in accordance with the detail drawings portion of paragraph SUBMITTALS. Cable installation plan shall include:

a. Site layout drawing with cable pulls identified in numeric order of expected pulling sequence and direction of cable pull.

b. List of cable installation equipment.

c. Lubricant manufacturer's application instructions.

d. Procedure for resealing cable ends to prevent moisture from entering cable.

e. Cable pulling tension calculations of all cable pulls.

f. Cable percentage conduit fill.

g. Cable sidewall thrust pressure.

h. Cable minimum bend radius and minimum diameter of pulling wheels used.

i. Cable jam ratio.

j. Maximum allowable pulling tension on each different type and size of conductor.

k. Maximum allowable pulling tension on pulling device.

3.2.2 Duct Line

Medium-voltage cables [Low-voltage cables] [Cables] shall be installed in duct lines where indicated. Cable splices in low-voltage cables shall be made in manholes and handholes only, except as otherwise noted. [Cable joints in medium-voltage cables shall be made in manholes or approved pullboxes only. Neutral and grounding conductors shall be installed in the same duct with their associated phase conductors.

3.2.3 Electric Manholes

Cables shall be routed around the interior walls and securely supported from walls on cables racks. Cable routing shall minimize cable crossover, provide access space for maintenance and installation of additional cables, and maintain cable separation in accordance with IEEE C2.

3.3 CABLE JOINTS

Medium-voltage cable joints shall be made by qualified cable splicers only. Qualifications of cable splicers shall be submitted in accordance with paragraph SUBMITTALS. Shields shall be applied as required to continue the shielding system through each entire cable joint. Shields may be integrally molded parts of preformed joints. Shields shall be grounded at each joint or in accordance with manufacturer's recommended practice. Cable joints shall provide insulation and jacket equivalent to that of the associated cable. Armored cable joints shall be enclosed in compound-filled, cast-iron or alloy, splice boxes equipped with stuffing boxes and armor clamps of a suitable type and size for the cable being installed.

3.4 FIREPROOFING

Each medium-voltage cable and conductor in manholes shall be fire-proofed for their entire length within the manhole. Where cables and conductors have been lubricated to enhance pulling into ducts, the lubricant shall be removed from cables and conductors exposed in the manhole before fireproofing. Fire-stops shall be installed in each conduit entering or leaving a manhole.

3.4.1 Tape Method

Before application of fireproofing tape, plastic tape wrapping shall be applied over exposed metallic items such as the cable ground wire, metallic outer covering, or armor to minimize the possibility of corrosion from the fireproofing materials and moisture. Before applying fireproofing tape, irregularities of cables, such as at cable joints, shall be evened out with insulation putty. A flexible conformable polymeric elastomer fireproof

tape shall be wrapped tightly around each cable spirally in 1/2 lapped wrapping or in 2 butt-jointed wrappings with the second wrapping covering the joints of the first.

3.4.2 Sprayable Method

Manholes shall be power ventilated until coatings are dry and dewatered and the coatings are cured. Ventilation requirements shall be in accordance with the manufacturer's instruction, but not less than 10 air changes per hour shall be provided. Cable coatings shall be applied by spray, brush, or glove to a wet film thickness that reduces to the dry film thickness approved for fireproofing by FM P7825a. Application methods and necessary safety precautions shall be in accordance with the manufacturers instructions. After application, cable coatings shall be dry to the touch in 1 to 2 hours and fully cured in 48 hours, except where the manufacturer has stated that because of unusual humidity or temperature, longer periods may be necessary.

3.5 DUCT LINES

3.5.1 Requirements

Numbers and sizes of ducts shall be as indicated. Duct lines shall be laid with a minimum slope of 4 inches per 100 feet. Depending on the contour of the finished grade, the high-point may be at a terminal, a manhole, a handhole, or between manholes or handholes. Short-radius manufactured 90-degree duct bends may be used only for pole or equipment risers, unless specifically indicated as acceptable. The minimum manufactured bend radius shall be 18 inches for ducts of less than 3 inch diameter, and 36 inches for ducts 3 inches or greater in diameter. Otherwise, long sweep bends having a minimum radius of 25 feet shall be used for a change of direction of more than 5 degrees, either horizontally or vertically. Both curved and straight sections may be used to form long sweep bends, but the maximum curve used shall be 30 degrees and manufactured bends shall be used. Ducts shall be provided with end bells whenever duct lines terminate in manholes or handholes.

3.5.2 Treatment

Ducts shall be kept clean of concrete, dirt, or foreign substances during construction. Field cuts requiring tapers shall be made with proper tools and match factory tapers. A coupling recommended by the duct manufacturer shall be used whenever an existing duct is connected to a duct of different material or shape. Ducts shall be stored to avoid warping and deterioration with ends sufficiently plugged to prevent entry of any water or solid substances. Ducts shall be thoroughly cleaned before being laid. Plastic ducts shall be stored on a flat surface and protected from the direct rays of the sun.

3.5.3 Concrete Encasement

Ducts requiring concrete encasements shall comply with NFPA 70, except that electrical duct bank configurations for ducts 6 inches in diameter shall be determined by calculation and as shown on the drawings. The separation between adjacent electric power and communication ducts shall conform to IEEE C2. Duct line encasements shall be monolithic construction. Where a connection is made to a previously poured encasement, the new encasement shall be well bonded or doweled to the existing encasement. The Contractor shall submit proposed bonding method for approval in accordance with the

detail drawing portion of paragraph SUBMITTALS. At any point, except railroad and airfield crossings, tops of concrete encasements shall be not less than the cover requirements listed in NFPA 70. At railroad and airfield crossings, duct lines shall be encased with concrete and reinforced as indicated to withstand specified surface loadings. Tops of concrete encasements shall be not less than 5 feet below tops of rails or airfield paving unless otherwise indicated. Where ducts are jacked under existing pavement, rigid steel conduit will be installed because of its strength. To protect the corrosion-resistant conduit coating, predrilling or installing conduit inside a larger iron pipe sleeve (jack-and-sleeve) is required. For crossings of existing railroads and airfield pavements greater than 50 feet in length, the predrilling method or the jack-and-sleeve method will be used. Separators or spacing blocks shall be made of steel, concrete, plastic, or a combination of these materials placed not farther apart than 4 feet on centers. Ducts shall be securely anchored to prevent movement during the placement of concrete and joints shall be staggered at least 6 inches vertically.

3.5.4 Nonencased Direct-Burial

Top of duct lines shall be below the frost line depth, but not less than 18 inches below finished grade and shall be installed with a minimum of 3 inches of earth around each duct, except that between adjacent electric power and communication ducts, 12 inches of earth is required. Bottoms of trenches shall be graded toward manholes or handholes and shall be smooth and free of stones, soft spots, and sharp objects. Where bottoms of trenches comprise materials other than sand, a 3 inch layer of sand shall be laid first and compacted to approximate densities of surrounding firm soil before installing ducts. Joints in adjacent tiers of duct shall be vertically staggered at least 6 inches. The first 6 inch layer of backfill cover shall be sand compacted as previously specified. The rest of the excavation shall be backfilled and compacted in3 to 6 inch layers. Duct banks may be held in alignment with earth. However, high-tiered banks shall use a wooden frame or equivalent form to hold ducts in alignment prior to backfilling.

3.5.5 Installation of Couplings

Joints in each type of duct shall be made up in accordance with the manufacturer's recommendations for the particular type of duct and coupling selected and as approved.

3.5.5.1 Bituminized-Fiber Ducts

Bituminized-fiber ducts shall be used to interface with existing bituminized-fiber duct as shown. To ensure a watertight joint, tapered ends or joints of the same material as the ducts shall be swabbed with bituminous or joint-sealing compound before couplings are applied. Plastic or nonmetallic couplings shall be tightly driven onto unswabbed ducts. Due to the brittleness of plastic couplings at low temperatures, such couplings shall not be installed when temperatures are below 0 degrees F. Couplings shall be warmed in hot water or by another approved method when installed at temperatures below 32 degrees F.

3.5.5.2 Plastic Duct

Duct joints shall be made by brushing a plastic solvent cement on insides of plastic coupling fittings and on outsides of duct ends. Each duct and fitting shall then be slipped together with a quick 1/4-turn twist to set

the joint tightly.

3.5.6 Duct Line Markers

Duct line markers shall be provided at the ends of long duct line stubouts or for other ducts whose locations are indeterminate because of duct curvature or terminations at completely below-grade structures. In addition to markers, a 5 mil brightly colored plastic tape, not less than 3 inches in width and suitably inscribed at not more than 10 feet on centers with a continuous metallic backing and a corrosion-resistant 1 mil metallic foil core to permit easy location of the duct line, shall be placed approximately 12 inches below finished grade levels of such lines.

3.6 MANHOLES, HANDHOLES, AND PULLBOXES

3.6.1 General

Manholes shall be constructed approximately where shown. The exact location of each manhole shall be determined after careful consideration has been given to the location of other utilities, grading, and paving. The location of each manhole shall be approved by the Contracting Officer before construction of the manhole is started. Manholes shall be the type noted on the drawings and shall be constructed in accordance with the applicable details as indicated. Top, walls, and bottom shall consist of reinforced concrete. Walls and bottom shall be of monolithic concrete construction. The Contractor may at his option utilize monolithically constructed precast-concrete manholes having the required strength and inside dimensions as required by the drawings or specifications. In paved areas, frames and covers for manhole and handhole entrances in vehicular traffic areas shall be flush with the finished surface of the paving. In unpaved areas, the top of manhole covers shall be approximately 1/2 inch above the finished grade. Where existing grades that are higher than finished grades are encountered, concrete assemblies designed for the purpose shall be installed to elevate temporarily the manhole cover to existing grade level. All duct lines entering manholes must be installed on compact soil or otherwise supported when entering a manhole to prevent shear stress on the duct at the point of entrance to the manhole. Duct lines entering cast-in-place concrete manholes shall be cast in-place with the manhole. Duct lines entering precast concrete manholes through a precast knockout penetration shall be grouted tight with a portland cement mortar. PVC duct lines entering precast manholes through a PVC endbell shall be solvent welded to the endbell. A cast metal grille-type sump frame and cover shall be installed over the manhole sump. A cable-pulling iron shall be installed in the wall opposite each duct line entrance.

3.6.2 Electric Manholes

Cables shall be securely supported from walls by hot-dip galvanized cable racks with a plastic coating over the galvanizing and equipped with adjustable hooks and insulators. The number of cable racks indicated shall be installed in each manhole and not less than 2 spare hooks shall be installed on each cable rack. Insulators shall be made of high-glazed porcelain. Insulators will not be required on spare hooks.

3.6.3 Communications Manholes

The number of hot-dip galvanized cable racks with a plastic coating over the galvanizing indicated shall be installed in each telephone manhole. Each cable rack shall be provided with 2 cable hooks. Cables for the

telephone and communication systems will be installed by others.

3.6.4 Handholes

Handholes shall be located approximately as shown. Handholes shall be of the type noted on the drawings and shall be constructed in accordance with the details shown.

3.6.5 Pullboxes

Pullbox tops shall be flush with sidewalks or curbs or placed 1/2 inchabove surrounding grades when remote from curbed roadways or sidewalks. Covers shall be marked "Low-Voltage" and provided with 2 lifting eyes and 2 hold-down bolts. Each box shall have a suitable opening for a ground rod. Conduit, cable, ground rod entrances, and unused openings shall be sealed with mortar.

3.6.6 Ground Rods

A ground rod shall be installed at the manholes, handholes and pullboxes. Ground rods shall be driven into the earth before the manhole floor is poured so that approximately 4 inches of the ground rod will extend above the manhole floor. When precast concrete manholes are used, the top of the ground rod may be below the manhole floor and a No. 1/0 AWG ground conductor brought into the manhole through a watertight sleeve in the manhole wall.

3.7 PAD-MOUNTED EQUIPMENT INSTALLATION

Pad-mounted equipment, shall be installed on concrete pads in accordance with the manufacturer's published, standard installation drawings and procedures, except that they shall be modified to meet the requirements of this document. Units shall be installed so that they do not damage equipment or scratch painted or coated surfaces. After installation, surfaces shall be inspected and scratches touched up with a paint or coating provided by the manufacturer especially for this purpose.

3.7.1 Concrete Pads

3.7.1.1 Construction

Concrete pads for pad-mounted electrical equipment may be either pre-fabricated or poured-in-place. Pads shall be constructed as indicated, except that exact pad dimensions and mounting details are equipment specific and are the responsibility of the Contractor. Tops of concrete pads shall be level and shall project 4 inches above finished paving or grade and sloped to drain. Edges of concrete pads shall have 3/4 inch chamfer. Conduits for primary, secondary, and grounding conductors shall be set in place prior to placement of concrete pads. Where grounding electrode conductors are installed through concrete pads, PVC conduit sleeves shall be installed through the concrete to provide physical protection. To facilitate cable installation and termination, the concrete pad shall be provided with a rectangular hole below the primary and secondary compartments, sized in accordance with the manufacturer's recommended dimensions. Upon completion of equipment installation the rectangular hole shall be filled with masonry grout.

3.7.1.2 Concrete and Reinforcement

Concrete work shall have minimum 3000 psi compressive strength and comform to the requirements of Section 03300 CAST-IN-PLACE STRUCTURAL CONCRETE. Concrete pad reinforcement shall be in accordance with Section 03200 CONCRETE REINFORCEMENT.

3.7.1.3 Sealing

When the installation is complete, the Contractor shall seal all conduit and other entries into the equipment enclosure with an approved sealing compound. Seals shall be of sufficient strength and durability to protect all energized live parts of the equipment from rodents, insects, or other foreign matter.

3.7.2 Padlocks

Padlocks shall be provided for pad-mounted equipment and for each fence gate. Padlocks shall be keyed as directed by the Contracting Officer.

3.7.3 Fencing

Fencing shall conform to the requirement of and be installed in accordance with Section 02821 CHAIN LINK FENCE. Fences shall provide working clearances for operation and maintenance in accordance with IEEE C2. The entire space between fences and concrete pads shall be excavated to a minimum depth of 4 inches below finished gradelines, shall be graded to reasonably level surfaces, and filled with well-compacted clean coarse gravel or crushed stone of 1/2 to 1-1/2 inches graded size up to finished gradelines. Space between fences and concrete pads shall be excavated to a minimum depth of 4 inches below finished gradelines, shall be graded to reasonably level surfaces, and filled with well-compacted clean coarse gravel or crushed stone of 1/2 to 1-1/2 inches graded size up to finished gradelines.

3.8 CONNECTIONS BETWEEN AERIAL AND UNDERGROUND SYSTEMS

Connections between aerial and underground systems shall be made as shown. Underground cables shall be extended up poles in conduit to cable terminations. Conduits shall be secured to the poles by 2-hole galvanized steel pipe straps spaced not more than 10 feet apart and with 1 strap not more than 12 inches from any bend or termination. Cable guards shall be secured to poles in accordance with the manufacturer's published procedures. Conduits shall be equipped with bushings to protect cables and minimize water entry. Capnut potheads shall be used to terminate medium-voltage multiple-conductor cable. Cables shall be supported by devices separate from the conduit or guard, near their point of exit from the conduit or guard.

3.8.1 Pole Installation

Pole installation shall be in accordance with Section 16370 ELECTRICAL DISTRIBUTION SYSTEM, AERIAL.

3.9 CONNECTIONS TO BUILDINGS

Cables shall be extended into the various buildings as indicated, and shall be connected to the first applicable termination point in each building. Interfacing with building interior conduit systems shall be at conduit stubouts terminating 5 feet outside of a building and 2 feet below finished grade as specified and provided under Section 16415 ELECTRICAL WORK,

INTERIOR. After installation of cables, conduits shall be sealed with caulking compound to prevent entrance of moisture or gases into buildings.

3.10 GROUNDING

A ground ring consisting of the indicated configuration of bare copper conductors and driven ground rods shall be installed around pad-mounted equipment as shown. Equipment frames of metal-enclosed equipment, and other noncurrent-carrying metal parts, such as cable shields, cable sheaths and armor, and metallic conduit shall be grounded. At least 2 connections shall be provided from a transformer to the ground mat. Metallic frames and covers of handholes and pull boxes shall be grounded by use of a braided, copper ground strap with equivalent ampacity of No. 6 AWG.

3.10.1 Grounding Electrodes

Grounding electrodes shall be installed as shown on the drawings and as follows:

a. Driven rod electrodes - Unless otherwise indicated, ground rods shall be driven into the earth until the tops of the rods are approximately 1 foot below finished grade.

b. Ground ring - A ground ring shall be installed as shown consisting of bare copper conductors installed 12 inches, plus or minus 3 inches, below finished top of soil grade. Ground ring conductors shall be sized as shown.

c. Additional electrodes - When the required ground resistance is not met, additional electrodes shall be provided interconnected with grounding conductors to achieve the specified ground resistance. The additional electrodes will be up to three,10 feet rods spaced a minimum of 12 feet apart driven perpendicular to grade. In high ground resistance, UL listed chemically charged ground rods may be used. If the resultant resistance exceeds 25 ohms measured not less than 48 hours after rainfall, the Contracting Officer shall be notified immediately.

3.10.2 Grounding and Bonding Connections

Connections above grade shall be made by the fusion-welding process or with bolted solderless connectors, in compliance with UL 467, and those below grade shall be made by a fusion-welding process. Where grounding conductors are connected to aluminum-composition conductors, specially treated or lined copper-to-aluminum connectors suitable for this purpose shall be used.

3.10.3 Grounding and Bonding Conductors

Grounding and bonding conductors include conductors used to bond transformer enclosures and equipment frames to the grounding electrode system. Grounding and bonding conductors shall be sized as shown, and located to provide maximum physical protection. Bends greater than 45 degrees in ground conductors are not permitted. Routing of ground conductors through concrete shall be avoided. When concrete penetration is necessary, nonmetallic conduit shall be cast flush with the points of concrete entrance and exit so as to provide an opening for the ground conductor, and the opening shall be sealed with a suitable compound after installation.

3.10.4 Surge Arrester Grounding

Surge arresters and neutrals shall be bonded directly to the transformer enclosure and then to the grounding electrode system with a bare copper conductor, sized as shown. Lead lengths shall be kept as short as practicable with no kinks or sharp bends.

3.10.5 Manhole, Handhole, or Concrete Pullbox Grounding

Ground rods installed in manholes, handholes, or concrete pullboxes shall be connected to cable racks, cable-pulling irons, the cable shielding, metallic sheath, and armor at each cable joint or splice by means of a No. 4 AWG braided tinned copper wire. Connections to metallic cable sheaths shall be by means of tinned terminals soldered to ground wires and to cable sheaths. Care shall be taken in soldering not to damage metallic cable sheaths or shields. Ground rods shall be protected with a double wrapping of pressure-sensitive plastic tape for a distance of 2 inches above and 6 inches below concrete penetrations. Grounding electrode conductors shall be neatly and firmly attached to manhole or handhole walls and the amount of exposed bare wire shall be held to a minimum.

3.10.6 Riser Pole Grounding

A single continuous vertical grounding electrode conductor shall be installed on each riser pole and connected directly to the grounding electrodes indicated on the drawings or required by these specifications. All equipment, neutrals, surge arresters, and items required to be grounded shall be connected directly to this vertical conductor. The grounding electrode conductor shall be sized as shown. Grounding electrode conductors shall be stapled to wood poles at intervals not exceeding2 feet.

3.11 FIELD TESTING

3.11.1 General

Field testing shall be performed in the presence of the Contracting Officer. The Contractor shall notify the Contracting Officer 14 days prior to conducting tests. The Contractor shall furnish all materials, labor, and equipment necessary to conduct field tests. The Contractor shall perform all tests and inspections recommended by the manufacturer unless specifically waived by the Contracting Officer. The Contractor shall maintain a written record of all tests which includes date, test performed, personnel involved, devices tested, serial number and name of test equipment, and test results. Field test reports shall be signed and dated by the Contractor.

3.11.2 Safety

The Contractor shall provide and use safety devices such as rubber gloves, protective barriers, and danger signs to protect and warn personnel in the test vicinity. The Contractor shall replace any devices or equipment which are damaged due to improper test procedures or handling.

3.11.3 Ground-Resistance Tests

The resistance of each grounding electrode system shall be measured using the fall-of-potential method defined in IEEE Std 81. Ground resistance measurements shall be made before the electrical distribution system is

energized and shall be made in normally dry conditions not less than 48 hours after the last rainfall. Resistance measurements of separate grounding electrode systems shall be made before the systems are bonded together below grade. The combined resistance of separate systems may be used to meet the required resistance, but the specified number of electrodes must still be provided.

a. Single rod electrode - 25 ohms.

b. Ground ring - 25 ohms.

3.11.4 Medium-Voltage Cable Test

After installation and before the operating test or connection to an existing system, the medium-voltage cable system shall be given a high potential test. Direct-current voltage shall be applied on each phase conductor of the system by connecting conductors as one terminal and connecting grounds or metallic shieldings or sheaths of the cable as the other terminal for each test. Prior to making the test, the cables shall be isolated by opening applicable protective devices and disconnecting equipment. The test shall be conducted with all splices, connectors, and terminations in place. The method, voltage, length of time, and other characteristics of the test for initial installation shall be in accordance with NEMA WC 7 or NEMA WC 8 for the particular type of cable installed, except that 28 kV and 35 kV insulation test voltages shall be in accordance with either AEIC CS5 or AEIC CS6 as applicable, and shall not exceed the recommendations of IEEE Std 404 for cable joints and IEEE Std 48 for cable terminations unless the cable and accessory manufacturers indicate higher voltages are acceptable for testing. Should any cable fail due to a weakness of conductor insulation or due to defects or injuries incidental to the installation or because of improper installation of cable, cable joints, terminations, or other connections, the Contractor shall make necessary repairs or replace cables as directed. Repaired or replaced cables shall be retested.

3.11.5 Low-Voltage Cable Test

Low-voltage cable, complete with splices, shall be tested for insulation resistance after the cables are installed, in their final configuration, ready for connection to the equipment, and prior to energization. The test voltage shall be 500 volts dc, applied for one minute between each conductor and ground and between all possible combinations conductors in the same trench, duct, or cable, with all other conductors in the same trench, duct, or conduit. The minimum value of insulation shall be:

R in megohms = (rated voltage in kV + 1) x 1000/(length of cable in feet

Each cable failing this test shall be repaired or replaced. The repaired cable shall be retested until failures have been eliminated.

3.11.6 Liquid-Filled Transformer Tests

The following field tests shall be performed on liquid-filled transformers 200 kVA and above. Pass-fail criteria shall be in accordance with transformer manufacturer's specifications.

a. Insulation resistance test phase-to-ground.

b. Turns ratio test.

c. Correct phase sequence.

d. Correct operation of tap changer.

3.11.7 Circuit Breaker Tests

The following field tests shall be performed on circuit breakers. Pass-fail criteria shall be in accordance with the circuit breaker manufacturer's specifications.

a. Insulation resistance test phase-to-phase.

b. Insulation resistance test phase-to-ground.

c. Closed breaker contact resistance test.

d. Power factor test.

e. High-potential test.

3.11.8 Operating Tests

After the installation is completed, and at such times as the Contracting Officer may direct, the Contractor shall conduct operating tests for approval. The equipment shall be demonstrated to operate in accordance with the requirements herein. An operating test report shall be submitted in accordance with paragraph SUBMITTALS.

3.12 ACCEPTANCE

Final acceptance of the facility will not be given until the Contractor has successfully completed all tests and after all defects in installation, material or operation have been corrected.

-- End of Section --

SECTION TABLE OF CONTENTS

DIVISION 16 - ELECTRICAL

SECTION 16528

EXTERIOR LIGHTING

PART 1 GENERAL

1.1 REFERENCES
1.2 MEASUREMENT AND PAYMENT
1.3 SYSTEM DESCRIPTION
1.3.1 Lighting System
1.3.2 Nameplates
1.3.3 Standard Products
1.3.4 Unusual Service Conditions
1.4 CORROSION PROTECTION
1.4.1 Aluminum Materials
1.4.2 Ferrous Metal Materials
1.4.2.1 Hardware
1.4.2.2 Equipment
1.4.3 Finishing
1.5 SUBMITTALS

PART 2 PRODUCTS

2.1 STANDARD PRODUCT
2.2 BRACKET ARMS
2.2.1 On Aluminum, Steel, Fiberglass, and Concrete Poles
2.2.2 On Wood Poles
2.2.3 Floodlight Brackets
2.3 CABLE
2.3.1 Insulated Cable
2.3.2 Messenger Cable
2.3.3 Bare Copper Conductors
2.4 AERIAL CABLE HARDWARE
2.5 WOOD CROSSARMS
2.6 POLES
2.6.1 Aluminum Poles
2.6.2 Steel Poles
2.6.3 Concrete Poles
2.6.4 Wood Poles
2.6.5 Fiberglass Poles
2.6.6 Anchor Bolts
2.7 POLE LINE HARDWARE
2.8 SERIES ROADWAY LIGHTING INSULATORS
2.9 ELECTRICAL ENCLOSURES
2.9.1 Interior Enclosures
2.9.2 Exposed-to-Weather Enclosures
2.9.3 Corrosion Resistant Enclosures
2.9.4 Hazardous Environment Enclosures
2.10 ILLUMINATION
2.10.1 General Lighting

2.11 LAMPS AND BALLASTS, HIGH INTENSITY DISCHARGE (HID) SOURCES
2.11.1 High-Pressure Sodium
2.11.2 Metal-Halide
2.12 LUMINAIRE COMPONENTS
2.13 LIGHTING CONTROL EQUIPMENT
2.13.1 Photo-Control Devices
2.13.2 Timer Control Switches
2.13.3 Manual Control Switches
2.13.4 Safety Switches
2.13.5 Magnetic Contactor
2.14 PHOTOMETRIC DISTRIBUTION CLASSIFICATION
2.15 LUMINAIRES, FLOODLIGHTING
2.15.1 HID
2.16 FIXTURES
2.16.1 Accessories
2.16.2 Special Fixtures
2.16.3 In-Line Fuse

PART 3 EXECUTION

3.1 GENERAL
3.2 PREVENTION OF CORROSION
3.2.1 Aluminum
3.2.2 Steel Conduits
3.2.3 Cold Galvanizing
3.3 POLE INSTALLATION
3.3.1 Pole Brackets
3.3.2 Concrete Foundations
3.3.3 Rigid Steel Conduit Ells
3.3.4 Wood Pole Installation
3.3.5 Aluminum, Steel, Fiberglass and Concrete Pole Installation
3.3.5.1 Cast-In-Place Foundations
3.3.5.2 Power-Installed Screw Foundations
3.4 LIGHTING
3.4.1 Lamps
3.4.2 Fixture Installation
3.4.2.1 Accessories
3.4.2.2 In-Line Fuses
3.4.2.3 Special Fixtures
3.5 LIGHTING CONTROL SYSTEM
3.5.1 Photo-Control
3.5.2 Time Control Switches
3.5.3 Manual and Safety Switches
3.5.4 Magnetic Contactors
3.6 GROUNDING
3.6.1 Items to be Grounded
3.6.2 Lighting Pole
3.6.3 Handhole
3.7 TESTS
3.7.1 Operating Test

-- End of Section Table of Contents --

SECTION 16528

EXTERIOR LIGHTING

PART 1 GENERAL

1.1 REFERENCES

The publications listed below form a part of this specification to the extent referenced. The publications are referred to in the text by basic designation only.

AMERICAN ASSOCIATION OF STATE HIGHWAY AND TRANSPORTATION OFFICIALS (AASHTO)

AASHTO LTS-3	(1994) Standard Specifications for Structural Supports for Highway Signs, Luminaires and Traffic Signals

AMERICAN NATIONAL STANDARDS INSTITUTE (ANSI)

ANSI C78.1	(1991; C78.1a; R 1996) Fluorescent Lamps - Rapid-Start Types - Dimensional and Electrical Characteristics
ANSI C78.40	(1992) Mercury Lamps
ANSI C78.1350	(1990) Electric Lamps - 400-Watt, 100-Volt, S51 Single-Ended High-Pressure Sodium Lamps
ANSI C78.1351	(1989) Electric Lamps - 250-Watt, 100-Volt S50 Single-Ended High-Pressure Sodium Lamps
ANSI C78.1352	(1990) Electric Lamps - 1000-Watt, 250-Volt, S52 Single-Ended High-Pressure Sodium Lamps
ANSI C78.1355	(1989) Electric Lamps - 150-Watt, 55-Volt S55 High-Pressure Sodium Lamps
ANSI C78.1375	(1990; R 1996) 400-Watt, M59 Single-Ended Metal-Halide Lamps
ANSI C78.1376	(1990; R 1996) 1000-Watt, M47 Metal-Halide Lamps
ANSI C80.1	(1995) Rigid Steel Conduit - Zinc Coated
ANSI C82.4	(1992) Ballasts for High-Intensity-Discharge and Low-Pressure Sodium Lamps (Multiple-Supply Type)

ANSI C119.1	(1986) Sealed Insulated Underground Connector Systems Rated 600 Volts
ANSI C135.1	(1979) Galvanized Steel Bolts and Nuts for Overhead Line Construction
ANSI C135.14	(1979) Staples with Rolled or Slash Points for Overhead Line Construction
ANSI C135.30	(1988) Zinc-Coated Ferrous Ground Rods for Overhead or Underground Line Construction
ANSI C136.2	(1985) Luminaires, Voltage Classification of
ANSI C136.3	(1989) Luminaire Attachments - for Roadway Lighting Equipment
ANSI C136.6	(1990) Roadway Lighting Equipment - Metal Heads and Reflector Assemblies - Mechanical and Optical Interchangeability
ANSI C136.9	(1990) Roadway Lighting Equipment - Socket Support Assemblies for Use in Metal Heads - Mechanical Interchangeability
ANSI C136.10	(1995) Locking-type Photocontrol Devices and Mating Receptacles - Physical and Electrical Interchangeability and Testing for Roadway Lighting Equipment
ANSI C136.11	(1988; R 1994) Multiple Sockets for Roadway Lighting Equipment
ANSI C136.15	(1986) High-Intensity-Discharge and Low-Pressure Sodium Lamps in Luminaires - Field Identification
ANSI C136.20	(1990) Roadway Lighting Equipment - Fiber Reinforced Plastic (FRP) Fiber Lighting Poles
ANSI O5.1	(1992) Specifications and Dimensions for Wood Poles

AMERICAN SOCIETY FOR TESTING AND MATERIALS (ASTM)

ASTM A 36/A 36M	(1996) Carbon Structural Steel
ASTM A 48	(1994a) Gray Iron Castings
ASTM A 123	(1989a) Zinc (Hot-Dip Galvanized) Coatings on Iron and Steel Products
ASTM A 153	(1996) Zinc Coating (Hot-Dip) on Iron and Steel Hardware
ASTM A 575	(1989) Steel Bars, Carbon, Merchant Quality, M-Grades

ASTM A 576	(1990b; R 1995) Steel Bars, Carbon, Hot-Wrought, Special Quality
ASTM B 2	(1994) Medium-Hard-Drawn Copper Wire
ASTM B 8	(1995) Concentric-Lay-Stranded Copper Conductors, Hard, Medium-Hard, or Soft
ASTM B 117	(1995) Operating Salt Spray (Fog) Apparatus
ASTM C 478	(1996) Precast Reinforced Concrete Manhole Sections
ASTM D 1654	(1992) Evaluation of Painted or Coated Specimens Subjected to Corrosive Environments

AMERICAN WOOD-PRESERVERS' ASSOCIATION (AWPA)

AWPA C4	(1995) Poles - Preservative Treatment by Pressure Processes
AWPA C25	(1995) Sawn Crossarms - Preservative Treatment by Pressure Processes
AWPA P1/P13	(1995) Standard for Coal Tar Creosote for Land and Fresh Water and Marine (Coastal Water Use)
AWPA P8	(1995) Standards for Oil-Borne Preservatives
AWPA P9	(1992) Standards for Solvents for Organic Preservative Systems

ELECTRONIC INDUSTRIES ASSOCIATION (EIA)

EIA ANSI/EIA/TIA 232-E	(1991) Interface Between Data Terminal Equipment and Data Circuit-Terminating Equipment Employing Serial Binary Data Interchange

ILLUMINATING ENGINEERING SOCIETY OF NORTH AMERICA (IESNA)

IESNA RP-8	(1983; R 1993) Roadway Lighting

INSTITUTE OF ELECTRICAL AND ELECTRONICS ENGINEERS (IEEE)

IEEE C2	(1997) National Electrical Safety Code
IEEE C62.41	(1991) Surge Voltages in Low-Voltage AC Power Circuits
IEEE ANSI/IEEE C136.13	(1987; R 1997) Metal Brackets for Wood Poles
IEEE Std 81	(1983) Guide for Measuring Earth Resistivity, Ground Impedance, and Earth

	Surface Potentials of a Ground System

NATIONAL ELECTRICAL MANUFACTURERS ASSOCIATION (NEMA)

NEMA 250	(1991) Enclosures for Electrical Equipment (1000 Volts Maximum)
NEMA ICS 1	(1993) Industrial Control and Systems
NEMA ICS 2	(1993) Industrial Control and Systems Controllers, Contactors, and Overload Relays Rated Not More Than 2,000 Volts AC or 750 Volts DC Assemblies
NEMA ICS 6	(1993) Industrial Control and Systems, Enclosures
NEMA OS 1	(1989) Sheet-Steel Outlet Boxes, Device Boxes, Covers, and Box Supports
NEMA OS 2	(1986; Errata Aug 1986; R 1991) Nonmetallic Outlet Boxes, Device Boxes, Covers and Box Supports
NEMA RN 1	(1989) Polyvinyl-Chloride (PVC) Externally Coated Galvanized Rigid Steel Conduit and Intermediate Metal Conduit
NEMA TC 6	(1990) PVC and ABS Plastic Utilities Duct for Underground Installation
NEMA TC 9	(1990) Fittings for ABS and PVC Plastic Utilities Duct for Underground Installation

NATIONAL FIRE PROTECTION ASSOCIATION (NFPA)

NFPA 70	(1999) National Electrical Code

UNDERWRITERS LABORATORIES (UL)

UL 6	(1997) Rigid Metal Conduit
UL 44	(1997; Rev Aug 1997) Rubber-Insulated Wires and Cables
UL 98	(1994; Rev Oct 1995) Enclosed and Dead-Front Switches
UL 467	(1993; Rev Aug 1996) Grounding and Bonding Equipment
UL 486A	(1991; Rev Oct 1991) Wire Connectors and Soldering Lugs for Use with Copper Conductors
UL 486B	(1997; Rev Jun 1997) Wire Connections for Use with Aluminum Conductors
UL 506	(1994; Rev thru Oct 1997) Specialty

	Transformers
UL 514A	(1996) Metallic Outlet Boxes
UL 514B	(1996) Fittings for Conduit and Outlet Boxes
UL 514C	(1996) Nonmetallic Outlet Boxes, Flush-Device Boxes, and Covers
UL 651	(1995; Rev Jan 1997) Schedule 40 and 80 Rigid PVC Conduit
UL 651A	(1995; Rev Sep 1996) Type EB and A Rigid PVC Conduit and HDPE Conduit
UL 854	(1996; Rev May 1996) Service-Entrance Cables
UL 870	(1995) Wireways, Auxiliary Gutters, and Associated Fittings
UL 886	(1994; Rev thru Jan 1997) Outlet Boxes and Fittings for Use in Hazardous (Classified) Locations
UL 1029	(1994; Rev Sep 1995) High-Intensity-Discharge Lamp Ballasts
UL 1449	(1985; Errata Apr 1986) Transient Voltage Surge Suppressors
UL 1571	(1991; Rev thru Mar 1995) Incandescent Lighting Fixtures
UL 1572	(1995; Rev thru Jun 1997) High Intensity Discharge Lighting Fixtures

1.2 MEASUREMENT AND PAYMENT

Measurement for compensation shall be for the each individual item properly installed and accepted as listed under the base year Line Item Heading 0026, "LIGHTING-TO INCLUDE STREET AND PARKING LOT" of the Pricing Schedule.

1.3 SYSTEM DESCRIPTION

1.3.1 Lighting System

The lighting system shall be configured as specified and shown. The system shall include all fixtures, hardware, poles, cables, connectors, adapters and appurtenances needed to provide a fully functional lighting system.

1.3.2 Nameplates

Each major component of equipment shall have a nonferrous metal or engraved plastic nameplate which shall show, as a minimum, the manufacturer's name and address, the catalog or style number, the electrical rating in volts, and the capacity in amperes or watts.

1.3.3 Standard Products

Materials and equipment shall be standard products of manufacturer regularly engaged in the manufacture of such products. Items of equipment shall essentially duplicate equipment that has been in satisfactory use at least 2 years prior to bid opening.

1.3.4 Unusual Service Conditions

Equipment and materials furnished under this section shall be suitable for the following unusual service conditions: altitude 2300 feet, ambient temperature 104 degrees F.

1.4 CORROSION PROTECTION

1.4.1 Aluminum Materials

Aluminum shall not be used in contact with earth or concrete. Where aluminum conductors are connected to dissimilar metal, fittings conforming to UL 486B shall be used.

1.4.2 Ferrous Metal Materials

1.4.2.1 Hardware

Ferrous metal hardware shall be hot-dip galvanized in accordance with ASTM A 153 and ASTM A 123.

1.4.2.2 Equipment

Equipment and component items, including but not limited to metal poles and ferrous metal luminaires not hot-dip galvanized or porcelain enamel finished, shall be provided with corrosion-resistant finishes which shall withstand 120 hours of exposure to the salt spray test specified in ASTM B 117 without loss of paint or release of adhesion of the paint primer coat to the metal surface in excess of 1/16 inch from the test mark. The scribed test mark and test evaluation shall have a rating of not less than 7 in accordance with TABLE 1, (procedure A) of ASTM D 1654. Cut edges or otherwise damaged surfaces of hot-dip galvanized sheet steel or mill galvanized sheet steel shall be coated with a zinc rich paint conforming to the manufacturer's standard.

1.4.3 Finishing

Painting required for surfaces not otherwise specified and finish painting of items only primed at the factory, shall be as specified in Section 09900 PAINTING, GENERAL.

1.5 SUBMITTALS

Government approval is required for submittals with a "GA" designation; submittals having an "FIO" designation are for information only. The following shall be submitted in accordance with section 01330 SUBMITTAL PROCEDURES:

SD-01 Data

Equipment and Materials; FIO.

Data published by the manufacturer of each item on the list of equipment and material, to permit verification that the item proposed is of the correct size, properly rated or applied, or is otherwise suitable for the application and fully conforms to the requirements specified.

Spare Parts; FIO.

Spare parts data for each item of material and equipment specified, after approval of detail drawings for materials and equipment, and not later than 4 months before the date of beneficial occupancy. The data shall include a complete list of parts, special tools, and supplies, with current unit prices and sources of supply.

SD-04 Drawings

Lighting System; GA.

Detail drawings for the complete system and for poles, lighting fixtures, bracket arms, and controllers.

A typical layout showing light locations, isolux patterns, and lighting ratios.

As-Built Drawings; FIO.

Final as-built drawings shall be finished drawings on mylar or vellum and shall be delivered with the final test report.

Operating Test; GA.

Test procedures and reports for the Operating Test. After receipt by the Contractor of written approval of the test procedures, the Contractor shall schedule the tests. The final test procedures report shall be delivered after completion of the tests.

Ground Resistance Measurements; FIO.

The measured resistance to ground of each separate grounding installation, indicating the location of the rods, the resistance of the soil in ohms per millimeter and the soil conditions at the time the measurements were made. The information shall be in writing.

SD-19 Operation and Maintenance Manuals

Lighting System; FIO.

A draft copy of the operation and maintenance manuals, prior to beginning the tests for use during site testing. Final copies of the manuals as specified bound in hardback, loose-leaf binders, within 30 days after completing the field test. The draft copy used during site testing shall be updated with any changes required, prior to final delivery of the manuals. Each manual's contents shall be identified on the cover. The manual shall include names, addresses, and telephone numbers of each subcontractor installing equipment and systems, and nearest service representatives for each item of equipment for each system. The manuals shall have a table of contents and tab sheets. Tab sheets shall be placed at the beginning of each chapter or section and at the beginning of each appendix. The final copies delivered after completion of the field test shall include modifications made during installation checkout and

acceptance.

PART 2 PRODUCTS

2.1 STANDARD PRODUCT

Material and equipment shall be the standard product of a manufacturer regularly engaged in the manufacture of the product and shall essentially duplicate items that have been in satisfactory use for at least 2 years prior to bid opening. Items of the same classification shall be identical including equipment, assemblies, parts, and components.

2.2 BRACKET ARMS

2.2.1 On Aluminum, Steel, Fiberglass, and Concrete Poles

Poles shall be provided with bracket arms of the support arm or davit style and of the length indicated on drawings. Bracket arms shall conform to the design of the pole provided. The bracket arms shall be capable of supporting the equipment to be mounted on it with the maximum wind and ice loading encountered at the site. Strength of bracket arms shall be in accordance with IEEE ANSI/IEEE C136.13. Steel brackets shall be galvanized. Wood bracket arms shall not be used.

2.2.2 On Wood Poles

Poles shall be in accordance with IEEE ANSI/IEEE C136.13 provided with galvanized steel pipe bracket arms coordinated for pole attachment. The bracket arm shall be cantilever without underbrace. The bracket arm shall be of the length indicated on drawings.

2.2.3 Floodlight Brackets

Floodlight brackets shall be coordinated with the floodlight support provided.

2.3 CABLE

The Contractor shall provide all wire and cable not indicated as government furnished equipment. Wire and cable components shall be able to withstand the jobsite environment for a minimum of 20 years.

2.3.1 Insulated Cable

Cable shall be type USE conforming to UL 854, with copper conductors and type RHW or XHHW insulation conforming to UL 44, and shall include green ground conductor. Cable shall be provided with insulation of a thickness not less than that given in column A of TABLE 15.1 of UL 854. Cable shall be rated 600 volts. Parts of the cable system such as splices and terminations shall be rated not less than 600 volts. The size and number of conductors and the number of cables shall be as indicated. Conductors larger than No. 8 AWG shall be stranded.

2.3.2 Messenger Cable

A messenger cable system to support aerial cable shall be furnished. The messenger system shall include guys, hardware and appurtenances needed to install the messenger cable. The messenger system shall be capable of supporting the weight of the lighting system cable with the required

messenger cable tensioning without exceeding 30 percent of its breaking strength under 60 degrees F conditions of no ice and no wind. The messenger shall be sized so that ice and wind loading normally encountered at the site does not cause the messenger to exceed 50 percent of its breaking strength. Appurtenances, guys, and hardware shall be sized to exceed the rated breaking strength of the messenger cable. Messenger cables shall be galvanized zinc coated steel or aluminum clad steel.

2.3.3 Bare Copper Conductors

Medium-hard-drawn copper conductors shall conform to ASTM B 2 and ASTM B 8.

2.4 AERIAL CABLE HARDWARE

Zinc coated aerial cable hardware shall conform to ANSI C135.1 and ANSI C135.14. Steel hardware material shall conform to ASTM A 575 and ASTM A 576. Hardware shall be hot-dip galvanized in accordance with ASTM A 153.

2.5 WOOD CROSSARMS

Douglas fir or dense southern pine of sizes specified or indicated, with pressure treatment conforming to AWPA C25.

2.6 POLES

Metal and concrete poles shall be the pole manufacturer's standard design for supporting the number of fixtures indicated. Poles shall be designed for a wind velocity of 100 mph at the base of the pole, for a wind gust factor of 1.3, and for the height and drag factors recommended by AASHTO LTS-3. The effective projected area of luminaires and other pole-mounted devices shall be taken into account in pole design. Poles shall have grounding provisions. The type of pole shaft material provided shall not be mixed on any project. Grounding connection shall be provided near the bottom of each metal pole and at each concrete pole anchor base. Scratched, stained, chipped, or dented poles shall not be installed.

2.6.1 Aluminum Poles

Aluminum poles and brackets shall have a uniform satin or dark anodic bronze finish to match fixtures and shall not be painted. Manufacturer's standard provision shall be made for protecting the finish during shipment and installation. Minimum protection shall consist of spirally wrapping each pole shaft with protective paper secured with tape, and shipping small parts in boxes.

a. Shafts shall be round and of seamless construction. The wall thickness shall be at least 0.188 inch. Exterior surfaces shall be free of protuberances, dents, cracks, and discoloration. Material for shafts shall be 6063 aluminum alloy; after fabrication, the alloy shall have a T6 temper. Tops of shafts shall be fitted with a round or tapered cover. Bases shall be anchor bolt mounted, made of cast aluminum alloy 356-T6, and shall be machined to receive the lower end of shafts. Joints between shafts and bases shall be welded. Bases shall be provided with four holes, spaced 90 degrees apart, for anchorage.

b. Hardware, except anchor bolts, shall be either 2024-T4 anodized aluminum alloy or stainless steel.

2.6.2 Steel Poles

Steel poles shall be hot-dip galvanized in accordance with ASTM A 123 and shall not be painted. Poles shall have tapered tubular members, either round in cross-section or polygonal. Pole shafts shall be one piece. Poles shall be welded construction with no bolts, rivets, or other means of fastening except as specifically approved. Pole markings shall be approximately 3 to 4 feet above grade and shall include manufacturer, year of manufacture, top and bottom diameters, length, and a loading tree. Attachment requirements shall be provided as indicated, including grounding provisions. Climbing facilities are not required. Bases shall be of the anchor bolt-mounted type.

2.6.3 Concrete Poles

Concrete poles shall be designed to withstand the loads specified in IEEE C2 multiplied by the appropriate overload capacity factors. Poles shall be reinforced or prestressed, either cast or spun. Spun poles shall be manufactured by a centrifugal spinning process with concrete pumped into a polished round tapered metal mold. Concrete for spun poles shall have a compressive strength of at least 5,000 psi at 28 days; steel wire shall have an ultimate tensile strength of at least 120,000 psi; and reinforcing bars shall have an ultimate tensile strength of at least 40,000 psi. After the high speed spinning action is completed, a spun pole shall be cured by a suitable wet steam process. Spun poles shall have a water absorption of not greater than 3 percent to eliminate cracking and to prevent erosion. Concrete poles shall have hollow shafts. Poles shall have a hard, smooth, nonporous surface that is resistant to soil acids, road salts, and attacks of water and frost. Poles shall not be installed for at least 15 days after manufacture. Fittings and brackets that conform to the concrete pole design shall be provided. Poles shall conform to strength calculations performed by a registered professional engineer and submitted in accordance with detail drawings portion of paragraph SUBMITTALS.

2.6.4 Wood Poles

Wood poles shall conform to ANSI O5.1. Poles shall be pressure treated in accordance with AWPA C4 with creosote conforming to AWPA P1/P13 and oil-borne preservatives and petroleum conforming to AWPA P8 and AWPA P9. Species listed in ANSI O5.1 for which a preservative treatment is not specified in AWPA C4 shall not be used. Northern white cedar may be used if treated as specified for western red cedar, and western fir may be used if treated as specified for Douglas fir. Pole markings shall be located approximately 10 feet from the butt of the pole or as approved. Poles shall be machine trimmed by turning smooth full length and shall be roofed, gained, and bored before pressure treatment.

2.6.5 Fiberglass Poles

Fiberglass poles shall conform to ANSI C136.20 and shall be designed specifically for supporting luminaires and shall have factory-formed cable entrance and handholes. Resin color shall be dark bronze, and pigment shall provide uniform coloration throughout entire wall thickness. Finished surface shall be pigmented polyurethane which may be omitted if the surface layer of the pole is inherently ultra-violet inhibited. Minimum fiberglass content shall be 65 percent with resin and pigment comprising the other 35 percent material content.

2.6.6 Anchor Bolts

Anchor bolts shall be the pole manufacturer's standard, but not less than necessary to meet the pole wind and ice loading, herein and other specified design requirements.

2.7 POLE LINE HARDWARE

Zinc coated hardware shall conform to ANSI C135.1 and ANSI C135.14, and steel hardware material shall conform to ASTM A 575 and ASTM A 576. Hardware shall be hot-dip galvanized in accordance with ASTM A 153.

2.8 SERIES ROADWAY LIGHTING INSULATORS

Pin insulators shall be Class 55-5. Line-post insulators shall be Class 57-1 or 57-11.

2.9 ELECTRICAL ENCLOSURES

The Contractor shall provide metallic enclosures as needed to house the lighting equipment. Enclosures shall conform to NEMA ICS 6 and NEMA 250. Enclosures shall be provided with lockable or padlock handles. Keys for lockable enclosures shall be delivered to the Contracting Officer. The enclosures shall be as specified or as shown on the drawings.

2.9.1 Interior Enclosures

Enclosures to house lighting equipment in an interior environment shall meet the requirements of a NEMA 12 enclosure as defined in NEMA 250.

2.9.2 Exposed-to-Weather Enclosures

Enclosures to house lighting equipment in an outdoor environment shall meet the requirements of a NEMA 4 enclosure as defined in NEMA 250.

2.9.3 Corrosion Resistant Enclosures

Enclosures to house lighting equipment in a corrosive environment shall meet the requirements of a NEMA 4X enclosure as defined in NEMA 250.

2.9.4 Hazardous Environment Enclosures

Equipment installed in a hazardous environment shall be installed as described in paragraph Hazardous Locations.

2.10 ILLUMINATION

2.10.1 General Lighting

Luminaires, ballasts, lamps, and control devices required for general area, roadway, and floodlighting shall be in accordance with sheets of Standard Detail No. 40-06-04, attached to these specifications.

2.11 LAMPS AND BALLASTS, HIGH INTENSITY DISCHARGE (HID) SOURCES

2.11.1 High-Pressure Sodium

Lamps shall conform to ANSI C78.1350 or ANSI C78.1351 or ANSI C78.1352 or ANSI C78.1355. Ballasts shall conform to ANSI C82.4, or UL 1029. High-pressure sodium lamps shall be clear.

2.11.2 Metal-Halide

Lamps shall be made by a manufacturer with not less than 5 years experience in making metal-halide lamps. Metal-halide lamps shall conform to ANSI C78.1375 or ANSI C78.1376. Ballasts shall conform to ANSI C82.4 or UL 1029.

2.12 LUMINAIRE COMPONENTS

Luminaire components shall conform to the following: attachments, ANSI C136.3; voltage classification, ANSI C136.2; field identification marking, ANSI C136.15; interchangeability, ANSI C136.6 and ANSI C136.9; and sockets, ANSI C136.11.

2.13 LIGHTING CONTROL EQUIPMENT

2.13.1 Photo-Control Devices

Photo-control devices shall conform to ANSI C136.10. Each photo-control element shall be a replaceable, weatherproof, plug-in or twist-lock assembly adjustable operation range of approximately 0.5 to 5.0 foot-candles. Luminaires shall be equipped with weatherproof plug-in or twist-lock receptacle to receive the photo-control element.

2.13.2 Timer Control Switches

Astronomic dial type arranged to turn "ON" at sunset, and turn "OFF" at a pre-determined time between 2030 hours hours and 0230 hours hours or sunrise, automatically changing the settings each day in accordance with seasonal changes of sunset and sunrise shall be provided. A switch rated 120 volts, having automatically wound spring mechanism or battery backed electronic clock to maintain accurate time for a minimum of 7 hours following a power failure shall be provided. A time switch with a manual on-off bypass switch shall be provided. Housing for the time switch shall be a surface mounted, NEMA 1 (indoor) or 4 (outdoor) enclosure conforming to NEMA ICS 6.

2.13.3 Manual Control Switches

Manual control switches shall conform to UL 98. The switches shall be the heavy-duty type and shall be suitable for operation on a 120 volt, 60 Hz system. The number of poles and ampere rating shall be as indicated. Switch construction shall be such that a screwdriver will be required to open the switch door when the switch is on. The selector switch shall have a minimum of three positions: ON, OFF, and AUTOMATIC. The automatic selection shall be used when photoelectric or timer control is desired. The selector switch shall interface with the lighting system magnetic contactor and control its activity.

2.13.4 Safety Switches

Switches shall be the heavy-duty type with NEMA ICS 6 Type [1] [4] enclosures and shall be suitable for operation on voltage and phase indicated. Switch construction shall be such that a screwdriver will be required to open the switch door when the switch is on. Blades shall be visible with door open and shall be of the quick-make, quick-break type. Terminal lugs shall be coordinated with the wire size. Switches shall conform to UL 98.

2.13.5 Magnetic Contactor

Magnetic contactors shall be mechanically held, electrically operated, and shall conform to NEMA ICS 1 and NEMA ICS 2. The contactor shall be suitable for voltage and phase indicated. Maximum continuous ampere rating and number of poles shall be as indicated on drawings. Enclosures for contactors mounted indoors shall be NEMA ICS 6, Type 1. Each contactor shall be provided with a spare, normally open auxiliary contact. Terminal lugs shall be coordinated with the wire size.

2.14 PHOTOMETRIC DISTRIBUTION CLASSIFICATION

Photometrics shall conform to IESNA RP-8.

2.15 LUMINAIRES, FLOODLIGHTING

2.15.1 HID

HID lighting fixtures shall conform to UL 1572.

2.16 FIXTURES

Standard fixtures shall be as detailed on Standard Detail No. 40-06-04, Sheet which accompany and form a part of this specification. Special fixtures shall be as indicated on the drawings. Illustrations shown on these sheets or on the drawings are indicative of the general type desired and are not intended to restrict selection to fixtures of any particular manufacturer. Fixtures of similar design, equivalent light distribution and brightness characteristics, equal finish and quality will be acceptable as approved.

2.16.1 Accessories

Accessories such as straps, mounting plates, nipples, or brackets shall be provided for proper installation.

2.16.2 Special Fixtures

The types of special fixtures are designated by letters and numbers. For example, SP-1 denotes special Type 1.

2.16.3 In-Line Fuse

An in-line fuse shall be provided for each fixture, and shall consist of a fuse and a UL approved waterproof fuse holder rated [at 30 amperes, 600 volts] [as indicated], with insulated boots. Fuse rating shall be [600 volts] [as indicated].

PART 3 EXECUTION

3.1 GENERAL

The Contractor shall install all system components, including government furnished equipment, and appurtenances in accordance with the manufacturer's instructions, IEEE C2, and contract documents, and shall furnish necessary hardware, fixtures, cables, wire, connectors, interconnections, services, and adjustments required for a complete and operable system.

3.2 PREVENTION OF CORROSION

3.2.1 Aluminum

Aluminum shall not be used in contact with earth or concrete, and where connected to dissimilar metal, shall be protected by approved fittings and treatment.

3.2.2 Steel Conduits

Steel conduits shall not be installed within concrete slabs-on-grade. Steel conduits installed underground or under slabs-on-grade, or penetrating slabs-on-grade, shall be field wrapped with 0.010 inch thick pipe-wrapping plastic tape applied with a 50 percent overlap, or shall have a factory-applied plastic resin, epoxy coating. Zinc coating may be omitted from steel conduit which has a factory-applied epoxy coating.

3.2.3 Cold Galvanizing

Field welds and/or brazing on factory galvanized boxes, enclosures, conduits, etc. shall be coated with a cold galvanized paint containing at least 95 percent zinc by weight.

3.3 POLE INSTALLATION

Pole lengths shall provide a luminaire mounting height as indicated. Luminaire mounting height may be increased by the height of the transformer base where required. Electrical cabling shall be provided to the light pole as specified in Section 16375 or 16370. The mount interfaces shall have ac power connected, and the pole wiring harness shall be connected to the luminaire. Light poles shall not be installed outside the site or inside the perimeter zone. Pole installation shall conform to the manufacturer's recommendations, NFPA 70, and IEEE C2. Poles shall be set straight and plumb.

3.3.1 Pole Brackets

Brackets shall be installed as specified by the manufacturer and as shown on drawings. Mounting hardware shall be sized appropriately to secure the mount, luminaire, and housing with wind and ice loading normally encountered at the site. Pole brackets for floodlights shall have the number of tenons indicated, arranged to provide the indicated spread between each tenon. Where indicated on drawings, adjustable heads shall be installed on the brackets to position the luminaires. Identical brackets shall be used with one type of luminaire.

3.3.2 Concrete Foundations

Concrete foundations shall have anchor bolts accurately set in the foundation using a template supplied by the pole manufacturer. Once the concrete has cured, the pole shall be set on the foundation, leveled on the foundation bolts, and secured with the holding nuts. The space between the foundation and the pole base shall be grouted. Concrete and grout work shall conform to Section 03300 CAST-IN-PLACE STRUCTURAL CONCRETE. Concrete shall be 3000 psi at 28 days.

3.3.3 Rigid Steel Conduit Ells

Rigid steel conduit ells shall be provided at all poles. Rigid steel conduit shall be connected to the ells and shall extend to a minimum height of 10 feet above grade. Rigid steel conduit ells shall be provided for

wood poles, where required

3.3.4 Wood Pole Installation

Wood poles shall be set straight and firm. In normal firm ground, minimum pole-setting depths shall be as listed in Table II. In rocky or swampy ground, pole-setting depths shall be decreased or increased respectively in accordance with the local utility's published standards and as approved. In swampy or soft ground, a bog shoe shall be used where support for a pole is required. Poles in straight runs shall be in a straight line. Curved poles shall be placed with curvatures in the direction of the pole line. Poles shall be set to maintain as even a grade as practicable. When the average ground run is level, consecutive poles shall not vary more than 5 feet in height. When the ground is uneven, poles differing in length shall be kept to minimum by locating poles to avoid the highest and lowest ground points. If it becomes necessary to shorten a pole, a piece shall be sawed off the top end and roofed. If any pole is shortened after treatment, the shortened end of the pole shall be given an application of hot preservative. Where poles are set on hilly terrain, along edges of cuts or embankments, or where soil may be washed out, special precautions shall be taken to ensure durable pole foundations, and the setting depth shall be measured from the lower side of the pole. Holes shall be dug large enough to permit proper use of tampers to the full depth of a hole. Earth shall be placed into a hole in 6 inch maximum layers, then thoroughly tamped before the next layer is placed. Surplus earth shall be placed around a pole in a cone and packed tightly to drain water from poles.

TABLE I - MINIMUM POLE-SETTING DEPTH
(Feet and Inches)

Length Overall Feet	Straight Lines	Curves, Corners, and Points of Extra Strain
20	5-0	5-0
25	5-6	5-6
30	5-6	5-6
35	6-0	6-0
40	6-0	6-6
45	6-6	7-0
50	7-0	7-6
55	7-6	8-0
60	8-0	8-6

3.3.5 Aluminum, Steel, Fiberglass and Concrete Pole Installation

Poles shall be mounted on cast-in-place or power-installed screw foundations. Concrete poles shall be embedded in accordance with the details shown. Conduit elbows shall be provided for cable entrances into pole interiors.

3.3.5.1 Cast-In-Place Foundations

Concrete foundations, sized as indicated, shall have anchor bolts accurately set in foundations using templates supplied by the pole manufacturer. Concrete work and grouting is specified in Section 03300 CAST-IN-PLACE STRUCTURAL CONCRETE. After the concrete has cured, pole anchor bases shall be set on foundations and leveled by shimming between

anchor bases and foundations or by setting anchor bases on leveling nuts and grouting. Poles shall be set plumb. Anchor bolts shall be the manufactures standard, and not less than necessary to meet the pole wind loading and other specified design requirements.

3.3.5.2 Power-Installed Screw Foundations

Power-installed screw foundations having the required strength mounting bolt and top plate dimensions may be utilized. Screw foundations shall be of at least 1/4 inch thick structural steel conforming to ASTM A 36/A 36M and hot-dip galvanized in accordance with ASTM A 123. Conduit slots in screw foundation shafts and top plates shall be marked to indicate orientation. Design calculations indicating adequate strength shall be approved before installation of any screw foundation.

3.4 LIGHTING

3.4.1 Lamps

Lamps of the proper type, wattage, and voltage rating shall be delivered to the project in the original containers and installed in the fixtures just before completion of the project.

3.4.2 Fixture Installation

Standard fixtures shall be installed as detailed.

3.4.2.1 Accessories

Accessories such as straps, mounting plates, nipples, or brackets shall be installed as required for proper installation.

3.4.2.2 In-Line Fuses

An in-line fuse shall be provided for each fixture.

3.4.2.3 Special Fixtures

The types of special fixtures are designated by letters and numbers. For example, SP-1 denotes special type 1.

3.5 LIGHTING CONTROL SYSTEM

3.5.1 Photo-Control

Lighting luminaires shall be individually controlled by photo-control elements mounted on the heads of the luminaires.]

3.5.2 Time Control Switches

Switches shall be installed with not less than four 1/4 inch bolts. The use of sheet metal screws will not be allowed.

3.5.3 Manual and Safety Switches

Terminal lugs shall be coordinated with the wire size. Switches shall be securely fastened to the supporting structure or wall using not less than four 1/4 inch bolts. The use of sheet metal screws will not be allowed.

3.5.4 Magnetic Contactors

Terminal lugs shall be coordinated with the wire size. Switches shall be securely fastened to the supporting structure or wall using not less than four 1/4 inch bolts. The use of sheet metal screws will not be allowed.

3.6 GROUNDING

Grounding shall be in conformance with NFPA 70, the contract drawings, and the following. Grounding conductors shall be soft-drawn, stranded copper. Ground rods shall be driven into the earth so that after the installation is complete, the top of the ground rod will be approximately 1 foot below finished grade, except in handholes.

3.6.1 Items to be Grounded

Ground conductors, metallic conduits, junction boxes, and noncurrent-carrying metallic parts of equipment shall be grounded. Connections above grade shall be made with solderless connectors, and those below grade shall be made by a fusion-welding process.

3.6.2 Lighting Pole

One ground rod shall be provided at each pole. Bases of metal or concrete lighting poles shall be connected to ground rods by means of No. 8 AWG bare copper wire. Lighting fixture brackets on wood and concrete poles shall be grounded to a No. 6 AWG bare copper grounding conductor connected to the ground rod.

3.6.3 Handhole

In each handhole, at a convenient point close to the wall, a ground rod shall be driven into the earth before the floor is poured, and approximately 4 inches of the ground rod shall extend above the floor after pouring. When precast concrete units are used, the top of the ground rod may be below the floor, and a No. 1/0 AWG copper ground conductor shall be brought inside through a watertight sleeve in the wall. Connection to ground rods shall be by means of bolted-clamp terminals or by an approved fusion-welding process. Ground wires shall be neatly and firmly attached to handhole walls, and the amount of exposed bare wire shall be held to a minimum.

3.7 TESTS

3.7.1 Operating Test

After the installation is completed and at such time as the Contracting Officer may direct, the Contractor shall conduct an operating test for approval. The equipment shall be demonstrated to operate in accordance with the requirements specified. The test shall be performed in the presence of the Contracting Officer. The Contractor shall furnish instruments and personnel required for the test, and the Government will furnish the necessary electric power.

-- End of Section --