SOLICITATION NO. DACA09-99-R-0007
DATE: FEBRUARY 1999

US Army Corps of Engineers ®
Albuquerque District

SPECIFICATIONS
FOR

SAMPLE PROJECT 0001

ADAL FACILITY CONTROL BUILDING

AND

ADAL PROCESSING AND VISITATION AREA

IMMIGRATION AND NATURALIZATION SERVICE
FLORENCE, ARIZONA

"INCREASE PROFIT - SUBMIT VECP'S"

Zero Accidents
Zero Tolerance

TABLE OF CONTENTS

DIVISION 1 - GENERAL REQUIREMENTS

SEE REMODEL PHS MEDICAL FACILITY FOR DIVISION 1 SPECIFICATIONS FOR ADAL FACILITY CONTROL BUILDING AND ADAL PROCESSING AND VISITATION AREA

DIVISION 2 - SITE WORK

SECTION 02050 - DEMOLITION

SECTION 02110 - CLEARING AND GRUBBING

SECTION 02222 - EXCAVATION, TRENCHING AND BACKFILLING FOR UTILITIES SYSTEMS

SECTION 02223 - BACKFILLING

SECTION 02225 - EARTHWORK FOR ROADWAYS, RAILROADS, AND AIRFIELDS

SECTION 02241 - AGGREGATE BASE COURSE

SECTION 02511A - CONCRETE SIDEWALKS AND CURBS AND GUTTERS

SECTION 02660 - WATER DISTRIBUTION SYSTEMS

SECTION 02730A - SANITARY SEWERS

SECTION 02831 - CHAIN-LINK FENCE

DIVISION 3 - CONCRETE

SECTION 03100 - STRUCTURAL CONCRETE FORMWORK

SECTION 03200 - CONCRETE REINFORCEMENT

SECTION 03300 - CAST-IN-PLACE STRUCTURAL CONCRETE

DIVISION 4 - MASONRY

SECTION 04200 - MASONRY

DIVISION 5 - METALS

SECTION 05055 - WELDING, STRUCTURAL

SECTION 05120 - STRUCTURAL STEEL

SECTION 05210 - STEEL JOISTS

SECTION 05300 - STEEL DECKING

SECTION 05500 - MISCELLANEOUS METAL

DIVISION 6 - WOOD AND PLASTICS

SECTION 06100 - ROUGH CARPENTRY

SECTION 06410 - CUSTOM CASEWORK

DIVISION 7 - THERMAL AND MOISTURE PROTECTION

SECTION 07220 - ROOF INSULATION

SECTION 07270 - FIRESTOPPING

SECTION 07510A - BUILT-UP ROOFING

SECTION 07600 - SHEET METALWORK, GENERAL

SECTION 07920A - CAULKING AND SEALANTS

DIVISION 8 - DOORS AND WINDOWS

SECTION 08110A - STEEL DOORS AND FRAMES

SECTION 08318 - SECURITY VAULT DOOR

SECTION 08510A - STEEL WINDOWS

SECTION 08700A - BUILDERS' HARDWARE

SECTION 08810 - GLASS AND GLAZING

DIVISION 9 - FINISHES

SECTION 09250A - GYPSUM WALLBOARD

SECTION 09510 - ACOUSTICAL CEILINGS

SECTION 09650 - RESILIENT FLOORING

SECTION 09900 - PAINTING, GENERAL

DIVISION 10 - SPECIALTIES

SECTION 10440 - INTERIOR SIGNAGE

SECTION 10508 - METAL LOCKERS

SECTION 10800A - TOILET ACCESSORIES

DIVISION 11 - EQUIPMENT

NOT USED

DIVISION 12 - FURNISHINGS

NOT USED

DIVISION 13 - SPECIAL CONSTRUCTION

SECTION 13158 - PALLET RACK SYSTEM

SECTION 13958 - FORCED ENTRY RESISTANT COMPONENTS

DIVISION 14 - CONVEYING SYSTEMS

NOT USED

DIVISION 15 - MECHANICAL

SECTION 15250 - THERMAL INSULATION FOR MECHANICAL SYSTEMS

SECTION 15330 - WET PIPE SPRINKLER SYSTEM, FIRE PROTECTION

SECTION 15400 - PLUMBING, GENERAL PURPOSE

SECTION 15653 - AIR CONDITIONING SYSTEM (UNITARY TYPE)

SECTION 15895 - AIR-SUPPLY, DISTRIBUTION, VENTILATION, AND EXHAUST SYSTEM

SECTION 15990 - TESTING, ADJUSTING AND BALANCING OF HVAC SYSTEMS

DIVISION 16 - ELECTRICAL

SECTION 16415 - ELECTRICAL WORK, INTERIOR

SECTION 16640A - CATHODIC PROTECTION SYSTEM (SACRIFICIAL ANODE)

SECTION 02050

DEMOLITION

PART 1 - GENERAL

1.1 REFERENCES

The publications listed below form a part of this specification to the extent referenced. The publications are referred to in the text by basic designation only.

ENGINEERING MANUALS (EM)

EM 385-1-1	(1992) U.S. Army Corps of Engineers Safety and Health Requirements Manual

1.2 GENERAL REQUIREMENTS

The work includes demolition, salvage of identified items and materials, and removal of resulting rubbish and debris. Rubbish and debris shall be removed from Government property daily, unless otherwise directed, to avoid accumulation at the demolition site. Materials that cannot be removed daily shall be stored in areas specified by the Contracting Officer. In the interest of occupational safety and health, the work shall be performed in accordance with EM 385-1-1, Section 23, Demolition, and other applicable Sections. In the interest of conservation, salvage shall be pursued to the maximum extent possible; salvaged items and materials shall be disposed of as specified.

1.3 SUBMITTALS

Government approval is required for submittals with a "GA" designation; submittals having an "FIO" designation are for information only. The following shall be submitted in accordance with Section 01330 - SUBMITTAL PROCEDURES:

SD-08 Statements

Work Plan; FI0.

The procedures proposed for the accomplishment of the work. The procedures shall provide for safe conduct of the work, including procedures and methods to provide necessary supports, lateral bracing and shoring when required, careful removal and disposition of materials specified to be salvaged, protection of property which is to remain undisturbed, coordination with other work in progress, and timely disconnection of utility services. The procedures shall include a detailed description of the methods and equipment to be used for each operation, and the sequence of operations in accordance with EM 385-1-1.

1.4 DUST CONTROL

The amount of dust resulting from demolition shall be controlled to prevent the spread of dust to occupied portions of the construction site and to avoid creation of a nuisance in the surrounding area. Use of water will not be permitted when it will result in, or create, hazardous or objectionable conditions such as ice, flooding and pollution.

1.5 PROTECTION

1.5.1 Protection of Personnel

During the demolition work the Contractor shall continuously evaluate the condition of the structure being demolished and take immediate action to protect all personnel working in and around the demolition site. No area, section, or component of floors, roofs, walls, columns, pilasters, or other structural element will be allowed to be left standing without sufficient bracing, shoring, or lateral support to prevent collapse or failure while workmen remove debris or perform other work in the immediate area.

Floors, roofs, walls, columns, pilasters, and other structural components that are designed and constructed to stand without lateral support or shoring, and are determined to be in stable condition, may be allowed to remain standing without additional bracing, shoring, of lateral support until demolished. The Contractor shall ensure that no elements determined to be unstable are left unsupported and shall be responsible for placing and securing bracing, shoring, or lateral supports as may be required as a result of any cutting, removal, or demolition work performed under this contract.

1.5.2 Protection of Existing Property

Before beginning any demolition work, the Contractor shall survey the site and examine the drawings and specifications to determine the extent of the work. The Contractor shall take necessary precautions to avoid damage to existing items to remain in place, to be reused, or to remain the property of the Government; any damaged items shall be repaired or replaced as approved by the Contracting Officer. The Contractor shall coordinate the work of this section with all other work and shall construct and maintain shoring, bracing, and supports as required. The Contractor shall ensure that structural elements are not overloaded and shall be responsible for increasing structural supports or adding new supports as may be required as a result of any cutting, removal, or demolition work performed under this contract.

1.5.3 Protection From the Weather

The interior of buildings to remain and salvageable materials and equipment shall be protected from the weather at all times.

1.5.4 Protection of Trees

Trees within the project site which might be damaged during demolition and which are indicated to be left in place shall be protected by a 6 foot high fence. The fence shall be securely erected a minimum of 5 feet from the trunk of individual trees or follow the outer perimeter of branches or clumps of

trees. Any tree designated to remain that is damaged during the work under this contract shall be replaced in kind or as approved by the Contracting Officer.

1.6 BURNING

The use of burning at the project site for the disposal of refuse and debris will not be permitted

1.7 USE OF EXPLOSIVES

Use of explosives will not be permitted.

PART 2 - PRODUCTS (Not Applicable)

PART 3 - EXECUTION

3.1 EXISTING STRUCTURES

Existing structures indicated shall be removed as indicated on the drawings. Interior walls, other than retaining walls and partitions, shall be removed as indicated on the drawings. Basement slabs shall be broken up to permit drainage. Sidewalks, curbs, gutters and street light bases shall be removed as indicated.

3.2 UTILITIES

Existing utilities shall be removed as indicated. When utility lines are encountered that are not indicated on the drawings, the Contracting Officer shall be notified prior to further work in that area.

3.3 FILLING

Holes, open basements and other hazardous openings shall be filled in accordance with Section 02222 - EXCAVATION, FILLING AND BACKFILLING FOR BUILDINGS.

3.4 DISPOSITION OF MATERIAL

Title to material and equipment to be demolished, except Government salvage and historical items, is vested in the Contractor upon receipt of notice to proceed. The Government will not be responsible for the condition, loss or damage to such property after notice to proceed.

3.4.1 Salvageable Items and Material

Contractor shall salvage items and material to the maximum extent possible.

3.4.1.1 Material Salvaged for the Contractor

Material salvaged for the Contractor shall be stored as approved by the Contracting Officer and shall be removed from Government property before completion of the contract. Material salvaged for the Contractor shall not be sold on the site.

3.4.1.2 Items Salvaged for the Using Service

The following items reserved as property of the using service will be removed prior to commencement of work under this contract: concrete benches and trash bins located on the east side of the Dining Facility.

3.4.2 Unsalvageable Material

Concrete, masonry, and other noncombustible material, except concrete permitted to remain in place, shall be disposed of off site at a location approved by the Contracting Officer. Combustible material shall be disposed of off site at an area approved by the contracting officer.

3.5 CLEAN UP

Debris and rubbish shall be removed from basement and similar excavations. Debris shall be removed and transported in a manner that prevents spillage on streets or adjacent areas. Federal, State and local regulations regarding hauling and disposal shall apply.

- - o 0 o - -

SECTION 02110

CLEARING AND GRUBBING

PART 1 GENERAL

1.1 DEFINITIONS

1.1.1 Clearing

Clearing shall consist of the felling, trimming, and cutting of trees into sections and the satisfactory disposal of the trees and other vegetation designated for removal, including down timber, snags, brush, and rubbish occurring in the areas to be cleared.

1.1.2 Grubbing

Grubbing shall consist of the removal and disposal of stumps, roots larger than 3 inches in diameter, and matted roots from the designated grubbing areas.

PART 2 PRODUCTS

Not Applicable.

PART 3 EXECUTION

3.1 CLEARING

Trees, stumps, roots, brush, and other vegetation in areas to be cleared shall be cut off below the original ground surface, except such trees and vegetation as may be indicated or directed to be left standing. Trees and vegetation to be left standing shall be protected from damage incident to clearing, grubbing, and construction operations by the erection of barriers or by such other means as the circumstances require.

3.2 GRUBBING

Material to be grubbed, together with logs and other organic or metallic debris not suitable for foundation purposes, shall be removed to a depth of not less than 18 inches below the original surface level of the ground in areas indicated to be grubbed and in areas indicated as construction areas under this contract, such as areas for buildings, and areas to be paved. Depressions made by grubbing shall be filled with suitable material and compacted to make the surface conform with the original adjacent surface of the ground.

3.3 DISPOSAL OF MATERIALS

Materials Other Than Salable Timber: Logs, stumps, roots, brush, rotten wood, and other refuse from the clearing and grubbing operations shall be disposed of off site. Off-site disposal shall be at a location approved by the Contracting Officer and shall comply with all local, state and federal regulations.

- - o 0 o - -

SECTION 02222

EXCAVATION, TRENCHING, AND BACKFILLING FOR UTILITIES SYSTEMS

PART 1 GENERAL

1.1 REFERENCES

The publications listed below form a part of this specification to the extent referenced. The publications are referred to in the text by basic designation only.

AMERICAN SOCIETY FOR TESTING AND MATERIALS (ASTM)

ASTM D 422	(1963; R 1990) Particle-Size Analysis of Soils
ASTM D 1556	(1990) Density and Unit Weight of Soil in Place by the Sand-Cone Method
ASTM D 1557	(1991) Laboratory Compaction Characteristics of Soil Using Modified Effort (56,000 ft-lbf/cu. ft. (2,700 kN-m/cu. m.))
ASTM D 2167	(1994) Density and Unit Weight of Soil in Place by the Rubber Balloon Method
ASTM D 2487	(1993) Classification of Soils for Engineering Purposes (Unified Soil Classification System
ASTM D 2922	(1991) Density of Soil and Soil-Aggregate in Place by Nuclear Methods (Shallow Depth)
ASTM D 3017	(1988; R 1993) Water Content of Soil and Rock in Place by Nuclear Methods (Shallow Depth)

1.2 DEFINITIONS

Degree of Compaction: Degree of compaction shall be expressed as a percentage of the maximum density obtained by the test procedure presented in ASTM D 1557.

1.3 SUBMITTALS

Government approval is required for submittals with a “GA” designation; submittals having an “FIO” designation are for information only. The following shall be submitted in accordance with Section 01330 - SUBMITTAL PROCEDURES.

SD-09 Reports

Field Density Tests; FIO.

Testing of Backfill Materials; FIO.

Copies of all laboratory and field test reports within 24 hours of the completion of the test.

PART 2 PRODUCTS

2.1 MATERIALS

2.1.1 Satisfactory Materials

Satisfactory materials shall consist of any material classified by ASTM D 2487 as GC, GM, SP, SM, SC, CL, CH GW, GP, AND SW.

2.1.2 Unsatisfactory Materials

Unsatisfactory materials include but are not limited to those materials containing roots and other organic matter, trash, debris, frozen materials and stones larger than 3 inches, and materials classified in ASTM D 2487, as PT, OH, and OL. Unsatisfactory materials also include man-made fills, refuse, or backfills from previous construction.

2.1.3 Cohesionless and Cohesive Materials

Cohesionless materials shall include materials classified in ASTM D 2487 as GW, GP, SW, and SP. Cohesive materials include materials classified as GC, SC, ML, CL, MH, and CH. Materials classified as GM and SM will be identified as cohesionless only when the fines are nonplastic.

2.1.4 Rock

Rock shall consist of boulders measuring ½ cubic yard or more and materials that cannot be removed without systematic drilling and blasting such as rock material in ledges, bedded deposits, unstratified masses and conglomerate deposits, and below ground concrete or masonry structures, exceeding ½ cubic yard in volume, except that pavements will not be considered as rock.

2.1.5 Unyielding Material

Unyielding material shall consist of rock and gravelly soils with stones greater than 3 inches in any dimension or as defined by the pipe manufacturer, whichever is smaller.

2.1.6 Unstable Material

Unstable material shall consist of materials too wet to properly support the utility pipe, conduit, or appurtenant structure.

2.1.7 Select Granular Material

Select granular material shall consist of well-graded sand, gravel, crushed gravel, crushed stone or crushed slag composed of hard, tough and durable particles, and shall contain not more than 10 percent by weight of material passing a No. 200 mesh sieve and no less than 95 percent by weight passing the l-inch sieve. The maximum allowable aggregate size shall be 3/4 inches, or the maximum size recommended by the pipe manufacturer, whichever is smaller.

2.1.8 Initial Backfill Material

Initial backfill shall consist of select granular material or satisfactory materials free from rocks 1 inches or larger in any dimension or free from rocks of such size as recommended by the pipe manufacturer, whichever is smaller.

2.1.9 Plastic Marking Tape

Plastic marking tape shall be acid and alkali-resistant polyethylene film, 6 inches wide with minimum thickness of 0.004 inch. Tape shall have a minimum strength of 1750 psi lengthwise and 1500 psi crosswise. The tape shall be manufactured with integral wires, foil backing or other means to enable detection by a metal detector when the tape is buried up to 3 feet deep. The tape shall be of a type specifically manufactured for marking and locating underground utilities. The metallic core of the tape shall be encased in a protective jacket or provided with other means to protect it from corrosion. Tape color shall be as specified in TABLE 1 and shall bear a continuous printed inscription describing the specific utility.

TABLE 1. Tape Color	
Red	Electric
Yellow	Gas, Oil, Dangerous Materials
Orange	Telephone, Telegraph, Television, Police, and Fire Communications
Blue	Water Systems
Green	Sewer Systems

PART 3 EXECUTION

3.1 EXCAVATION

Excavation shall be performed to the lines and grades indicated. Rock excavation shall include removal and disposition of material defined as rock in paragraph MATERIALS. Earth excavation shall include removal and disposal of material not classified as rock excavation. During excavation, material satisfactory for backfilling shall be stockpiled in an orderly manner at a distance from the banks of the trench equal to ½ the depth of the excavation, but in no instance closer than 2 feet. Excavated material not required or not satisfactory for backfill shall be removed from the site or shall be disposed of as approved by the Contracting Officer. Grading shall be done as may be necessary to prevent surface water from flowing into the excavation, and any water accumulating therein shall be removed to maintain the stability of the bottom and sides of the excavation. Unauthorized overexcavation shall be backfilled in accordance with paragraph BACKFILLING AND COMPACTION at no additional cost to the Government.

3.1.1 Bottom Preparation

The bottoms of trenches shall be accurately graded to provide uniform bearing and support for the bottom quadrant of each section of the pipe. Bell holes shall be excavated to the necessary size at each joint or coupling to eliminate point bearing. Stones of 2 inches or greater in any dimension, or as recommended by the pipe manufacturer, whichever is smaller, shall be removed to avoid point bearing.

3.1.2 Removal of Unyielding Material

Where overdepth is not indicated and unyielding material is encountered in the bottom of the trench, such material shall be removed 4 inches below the required grade and replaced with suitable materials as provided in paragraph BACKFILLING AND COMPACTION.

3.1.3 Removal of Unstable Material

Where unstable material is encountered in the bottom of the trench, such material shall be removed to the depth directed and replaced to the proper grade with select granular material as provided in paragraph BACKFILLING AND COMPACTION. When removal of unstable material is required due to the fault or neglect of the Contractor in his performance of the work, the resulting material shall be excavated and replaced by the Contractor without additional cost to the Government.

3.1.4 Excavation for Appurtenances

Excavation for manholes, catch-basins, inlets, or similar structures shall be sufficient to leave at least 12 inches clear between the outer structure surfaces and the face of the excavation or support members and of sufficient size to permit the placement and removal of forms for the full length and width of structure footings and foundations as shown. Removal of unstable material shall be as specified above. When concrete or masonry is to be placed in an excavated area, special care shall be taken not to disturb the bottom of the excavation. Excavation to the final grade level shall not be made until just before the concrete or masonry is to be placed.

3.1.5 Stockpiles

Stockpiles of satisfactory and unsatisfactory and wasted materials shall be placed and graded as specified. Stockpiles shall be kept in a neat and well drained condition, giving due consideration to drainage at all times. The ground surface at stockpile locations shall be cleared, grubbed, and sealed by rubber-tired equipment, excavated satisfactory and unsatisfactory materials shall be separately stockpiled. Stockpiles of satisfactory materials shall be protected from contamination which may destroy the quality and fitness of the stockpiled material. If the Contractor fails to protect the stockpiles, and any material becomes unsatisfactory, such material shall be removed and replaced with satisfactory material from approved sources at no additional cost to the Government. Locations of stockpiles of satisfactory materials shall be subject to prior approval of the Contracting Officer.

3.2 BACKFILLING AND COMPACTION

Backfill material shall consist of satisfactory material, select granular material, or initial backfill material as required. Backfill shall be placed in layers not exceeding 6 inches loose thickness for compaction by hand operated machine compactors, and 8 inches loose thickness for other than hand operated machines, unless otherwise specified. Each layer shall be compacted to at least 95 percent maximum density for cohesionless soils and 90 percent maximum density for cohesive soils, unless otherwise specified.

3.1.6 Backfill for Appurtenances

After the manhole, catchbasin, inlet, or similar structure has been constructed and the concrete has been allowed to cure for 7 days, backfill shall be placed in such a manner that the structure will not be damaged by the shock of falling earth. The backfill material shall be deposited and compacted as specified for final backfill, and shall be brought up evenly on all sides of the structure to prevent eccentric loading and excessive stress.

3.2 SPECIAL REQUIREMENTS

Special requirements for both excavation and backfill relating to the specific utilities are as follows:

3.2.1 Water Lines

Trenches shall be of a depth to provide a minimum cover of 2-1/2 feet from the existing ground surface, or from the indicated finished grade, whichever is lower, to the top of the pipe.

3.2.2 Electrical Distribution System

Direct burial cable and conduit or duct line shall have a minimum cover of 24 inches from the finished grade, unless otherwise indicated.

3.2.3 Plastic Marking Tape

Warning tapes shall be installed directly above the pipe, at a depth of 18 inches below finished grade unless otherwise shown.

3.3 TESTING

Testing shall be the responsibility of the Contractor and shall be performed at no additional cost to the Government.

3.3.1 Testing Facilities

Tests shall be performed by an approved commercial testing laboratory or may be tested by facilities furnished by the Contractor. No work requiring testing will be permitted until the facilities have been inspected and approved by the Contracting Officer. The first inspection shall be at the expense of the Government. Cost incurred for any subsequent inspection required because of failure of the first inspection will be charged to the Contractor.

3.3.2 Testing of Backfill Materials

Characteristics of backfill materials shall be determined in accordance with particle size analysis of soils ASTM D 422 and moisture-density relations of soils ASTM D 1557. A minimum of one particle size analysis and one moisture-density relation test shall be performed on each different type of material used for bedding and backfill.

3.3.3 Field Density Tests

Tests shall be performed in sufficient numbers to ensure that the specified density is being obtained. A minimum of one field density test per lift of backfill for every 500 feet of installation shall be performed. One moisture density relationship shall be determined for every 1500 cubic yards of material used. Field in-place density shall be determined in accordance with ASTM D 1556 ASTM D 2167 or ASTM D 2922. When ASTM D 2922 is used, the calibration curves shall be checked and adjusted using the sand cone method as described in paragraph Calibration of the ASTM publication. ASTM D 2922 results in a wet unit weight of soil and when using this method, ASTM D 3017 shall be used to determine the moisture content of the soil. The calibration curves furnished with the moisture gauges shall be checked along with density calibration checks as described in ASTM D 3017. The calibration checks of both the density and moisture gauges shall be made at the beginning of a job, on each different type of material encountered, at intervals as directed by the Contracting Officer. Copies of calibration curves, results of calibration tests, and field and laboratory density tests shall be furnished to the Contracting Officer. Trenches improperly compacted shall be reopened to the depth directed, then refilled and compacted to the density specified at no additional cost to the Government.

- - o 0 o - -

SECTION 02223

BACKFILLING

PART 1 GENERAL

1.1 REFERENCES

The publications listed below form a part of this specification to the extent referenced. The publications are referred to in the text by basic designation only.

AMERICAN ASSOCIATION OF STATE HIGHWAY AND TRANSPORTATION OFFICIALS (AASHTO)

AASHTO T180	Moisture-Density Relations of Soils Using a 10-lb (4.54 kg) Rammer and an 18-in.(457 mm) drop.

AMERICAN SOCIETY FOR TESTING AND MATERIALS (ASTM)

ASTM D 698	Test Methods for Moisture-Density Relations of Soils and Soil-Aggregate Mixtures, Using 5.5 lb (2.49 Kg) Rammer and 12 inch (304.8 mm) drop.
ASTM D 1556	Test Method for Density of Soil in Place by the Sand-Cone Method.
ASTM D 1557	Test Methods for Moisture-Density Relations of Soils and Soil-Aggregate Mixtures Using 10 lb (4.54 Kg) Rammer and 18 inch (457 mm) drop.
ASTM D 2167	Test Method for Density and Unit Weight of Soil in Place by the Rubber Balloon Method.
ASTM D 2922	Test Methods for Density of Soil and Soil-Aggregate in Place by Nuclear Methods (Shallow Depth).
ASTM D 3017	Test Methods for Moisture Content of Soil and Soil-Aggregate Mixtures.

PART 2 PRODUCTS

Not Used

PART 3 EXECUTION

3.1 EXAMINATION

a. Verify sub-drainage, damp-proofing, or waterproofing installation has been inspected.

b. Verify structural ability of unsupported walls to support imposed loads by the fill.

3.2 PREPARATION

a. Compact subgrade to density requirements for subsequent backfill materials.

b. Cut out soft areas of subgrade not capable of compaction in place.

c. Scarify and proof roll subgrade surface to a depth of 8 inches to identify soft spots; fill and compact to density equal to or greater than requirements for subsequent fill material.

3.3 BACKFILLING

a. Backfill areas to contours and elevations with unfrozen materials.

b. Systematically backfill to allow maximum time for natural settlement. Do not backfill over porous, wet, frozen or spongy subgrade surfaces.

c. Granular Fill: Place and compact materials in equal continuous layers not exceeding 8 inches compacted depth.

d. Soil Fill: Place and compact material in equal continuous layers not exceeding 8 inches compacted depth.

e. Employ a placement method that does not disturb or damage other work.

f. Maintain optimum moisture content of backfill materials to attain required compaction density.

g. Backfill against supported foundation walls. Do not backfill against unsupported foundation walls.

h. Backfill simultaneously on each side of unsupported foundation walls until supports are in place.

i. Slope grade away from building minimum 2 inches in 10 ft, unless noted otherwise.

j. Make gradual grade changes. Blend slope into level areas.

k. Remove surplus backfill materials from site.

l. Leave fill material stockpile areas free of excess fill materials.

3.4 TOLERANCES

3.4.1 Top Surface of Backfilling

Plus or minus 1 inch from required elevations.

3.4.2 Top Surface of General Backfilling

Plus or minus 1 inch from required elevations.

3.5 FIELD QUALITY CONTROL

a. Compaction testing will be performed in accordance with ASTM D 1557.

b. If tests indicate Work does not meet specified requirements, remove Work, replace and retest.

3.6 PROTECTION OF FINISHED WORK

Reshape and re-compact fills subjected to vehicular traffic.

- - o 0 o - -

SECTION 02225

EARTHWORK FOR ROADWAYS, RAILROADS, AND AIRFIELDS

PART 1 GENERAL

1.1 REFERENCES

The publications listed below form a part of this specification to the extent referenced. The publications are referred to in the text by basic designation only.

AMERICAN SOCIETY FOR TESTING AND MATERIALS (ASTM)

ASTM C 136	(1993) Sieve Analysis of Fine and Coarse Aggregates.
ASTM D 422	(1963; R 1990) Particle-Size Analysis of Soils.
ASTM D 1140	(1992) Amount of Material in Soils Finer than the No. 200 (75-um) Sieve.
ASTM D 1556	(1990) Density of Soil In Place by the Sand-Cone Method.
ASTM D 1557	(1991) Moisture-Density Relations of Soils and Soil-Aggregate Mixtures Using 10-Lb. (4.54-kg) Rammer and 18-In. (457-mm) Drop, Procedure C.
ASTM D 2487	(1993) Classification of Soils for Engineering Purposes.
ASTM D 2922	(1991) Density of Soil and Soil-Aggregate In Place by Nuclear Methods (Shallow Depth), Method B.
ASTM D 3017	(1988; R-1993) Moisture Content of Soil and Soil-Aggregate In Place by Nuclear Methods (Shallow Depth).
ASTM D 4318	(1993) Liquid Limit, Plastic Limit, and Plasticity Index of Soils.

1.2 SUBMITTALS

Government approval is required for submittals with a “GA” designation; submittals having an “FIO” designation are for information only. The following shall be submitted in accordance with Section 01330, SUBMITTAL PROCEDURES.

SD-13, Certificates

Testing Laboratory, FIO.

The Contractor shall furnish the qualifications of the commercial testing laboratory, or the Contractor's testing facilities, that will be performing all testing in accordance with the PART 3 paragraph TESTING.

SD-08, Statements

Disposal of Satisfactory Excavated Material, GA.

The Contractor shall submit for approval the procedure of, and location for, disposal of satisfactory excavated material which cannot be used on the project in accordance with PART 1 paragraph UTILIZATION OF EXCAVATED MATERIALS.

SD-09, Reports

Satisfactory Materials, FIO.

The Contractor shall furnish certified test reports and analysis certifying that the satisfactory materials proposed for use at the project site conform to the specified requirements, and for all tests conducted in accordance with the PART 3 paragraph TESTING.

1.3 DEFINITIONS

1.3.1 Satisfactory Materials

Satisfactory materials shall comprise any materials classified by, ASTM D 2487 as GW, GP, GC, GM, SW, SP, SC, SM, and CL and ML in undisturbed state.

1.3.2 Unsatisfactory Materials

Unsatisfactory materials shall comprise any materials classified by ASTM D 2487 as PT, OH, OL, ML in disturbed state, Gypsum, and MH and CH in disturbed state and CH.

1.3.3 Cohesionless and Cohesive Materials

Cohesionless materials include materials classified in ASTM D 2487 as GW, GP, SW, and SP. Cohesive materials include materials classified as GC, SC, ML, CL, MH, and CH. Materials classified as GM and SM will be identified as cohesionless only when the fines have a plasticity index of 0. Testing required for classifying materials shall be in accordance with ASTM D 4318, ASTM C 136, ASTM D 422, and ASTM D 1140.

1.3.4 Degree of Compaction

Degree of compaction required is expressed as a percentage of the maximum density obtained by the test presented in ASTM D 1557, Procedure C. This will be abbreviated below as a percent of laboratory maximum density.

1.3.5 Topsoil

Topsoil shall be defined as natural, friable surface soil possessing the characteristics of representative soils in the vicinity that produce heavy growth of crops, grass, or other vegetation.

1.4 CLASSIFICATION OF EXCAVATION

No consideration will be given to the nature of the materials, and all excavation will be designated as unclassified excavation.

1.5 BLASTING

Blasting will not be permitted.

1.6 UTILIZATION OF EXCAVATED MATERIALS

All unsatisfactory materials removed from excavations shall be disposed of off site. Satisfactory material removed from excavations shall be used, insofar as practicable, in the construction of fills, embankments, subgrades, shoulders, bedding (as backfill), and for similar purposes. No satisfactory excavated material shall be wasted without specific written authorization. Satisfactory material authorized to be wasted shall be disposed of off site. No excavated material shall be disposed of in such a manner as to obstruct the flow of any stream, endanger a partly finished structure, impair the efficiency or appearance of any structure, or be detrimental to the completed work in any way.

PART 2 PRODUCTS

Not Used.

PART 3 EXECUTION

3.1 STRIPPING OF TOPSOIL

Where indicated or directed, topsoil shall be stripped to a depth of 6 inches. Topsoil shall be spread on areas already graded and prepared for topsoil, or when so specified topsoil shall be transported and deposited in stockpiles convenient to areas that are to receive application of the topsoil later, or at locations indicated or specified. Topsoil shall be kept separate from other excavated materials, brush, litter, objectionable weeds, roots, stones larger than 2 inches in diameter, and other materials that would interfere with planting and maintenance operations.

3.2 EXCAVATION

The Contractor shall perform excavation of every type of material encountered within the limits of the project, to the lines, grades, and elevations indicated and as specified herein. Grading shall be in conformity with the typical sections shown and the tolerances specified in paragraph "FINISHING." Satisfactory excavated materials shall be transported to and placed in fill or embankment within the limits of the work. Unsatisfactory materials encountered within the limits of the work shall be excavated below grade and replaced with satisfactory materials as directed. Payment therefore will be

in conformance with the changes clause of the CONTRACT CLAUSES. Surplus satisfactory excavated material not required for fill or embankment and all unsatisfactory excavated material shall be disposed of as specified in paragraph: UTILIZATION OF EXCAVATED MATERIALS. During construction, excavation and fill shall be performed in a manner and sequence that will provide proper drainage at all times. Material required for fill or embankment in excess of that produced by excavation within the grading limits shall be excavated from the borrow areas indicated or from other approved areas selected by the Contractor as specified herein.

3.2.1 Ditches, Gutters, and Channel Changes

Excavation of ditches, gutters, and channel changes shall be accomplished by cutting accurately to the cross sections, grades, and elevations shown. Care shall be taken not to excavate ditches and gutters below grades shown. Excessive open ditch or gutter excavation shall be backfilled with satisfactory thoroughly compacted material or with suitable stone or cobble to grades shown at no additional cost to the Government. Material excavated shall be disposed of as shown or as directed, except that in no case shall material be deposited less than 4 feet from the edge of a ditch. The Contractor shall maintain all excavations free from detrimental quantities of leaves, brush, sticks, trash, and other debris until final acceptance of the work.

3.2.2 Drainage Structures

Excavations shall be made accurately to the lines, grades, and elevations shown or as directed. Trenches and foundation pits shall be of sufficient size to permit the placement and removal of forms for the full length and width of structure footings and foundations as shown. Rock or other hard foundation material shall be cleaned of loose debris and cut to a firm surface either level, stepped, or serrated, as shown or as directed. Loose disintegrated rock and thin strata shall be removed. When concrete or masonry is to be placed in an excavated area, special care shall be taken not to disturb the bottom of the excavation. Excavation to the final grade level shall not be made until just before the concrete or masonry is to be placed.

3.3 SELECTION OF BORROW MATERIAL

Borrow material shall be selected to meet the requirements and conditions of the particular fill or embankment for which it is to be used. Borrow material shall be obtained off site. Unless otherwise provided in the contract, the Contractor shall obtain from the owners the right to procure material, pay all royalties and other charges involved, and bear all expense of developing the sources, including rights-of-way for hauling. Necessary clearing, grubbing, and satisfactory drainage of borrow pits and the disposal of debris thereon shall be considered related operations to the borrow excavation and shall be performed by the Contractor at no additional cost to the Government.

3.4 OPENING AND DRAINAGE OF EXCAVATION AND BORROW PITS

Except as otherwise permitted, borrow pits and other excavation areas shall be excavated in such manner as will afford adequate drainage. Overburden and other spoil material shall be transported to designated spoil areas or otherwise disposed of as directed. Borrow pits shall be neatly trimmed and

drained after the excavation is completed. The Contractor shall ensure that excavation of any area, operation of borrow pits, or dumping of spoil material results in minimum detrimental effects on natural environmental conditions.

3.5 BACKFILL

Backfill adjacent to any and all types of structures shall be placed and compacted to at least 90 percent laboratory maximum density for cohesive materials or 95 percent laboratory maximum density for cohesionless materials, in such a manner as to prevent wedging action or eccentric loading upon or against any structure. Compaction shall be accomplished by sheepsfoot rollers, pneumatic-tired rollers, steel-wheeled rollers, vibratory compactors, or other approved equipment well suited to the material being compacted.

3.6 SUBGRADE PREPARATION

Construction: Subgrade shall be shaped to line, grade, and cross section, and compacted as specified. This operation shall include plowing, disking, and any moistening or aerating required to obtain specified compaction. Soft or otherwise unsatisfactory material shall be removed and replaced with satisfactory excavated material or other approved material as directed. After rolling, the surface of the subgrade for roadways shall not show deviation greater the 3/8-inch when tested with a 10-foot straightedge applied both parallel and at right angles to the centerline of the area. The elevation of the finished subgrade shall not vary more than 0.05-foot from the established grade and cross section.

3.6.1 Compaction

Compaction shall be accomplished by sheepsfoot rollers, pneumatic-tired rollers, steel-wheeled rollers, vibratory compactors, or other approved equipment well suited to the type of material being compacted.

a. Subgrade for Pavements: Subgrade for pavements shall be compacted to at least laboratory maximum density as shown on the drawings.

3.7 FINISHING

The surface of all excavations, fills, embankments, and subgrades shall be finished to a smooth and compact surface in accordance with the lines, grades, and cross sections or elevations shown. The degree of finish for all graded areas shall be within 0.1-foot of the grades and elevations indicated that the degree of finish for subgrades shall be specified in paragraph "SUBGRADE PREPARATION" above. Gutters and ditches shall be finished in a manner that will result in effective drainage. The surface of areas to be turfed shall be finished to a smoothness suitable for the application of turfing materials.

3.8 TESTING

Testing shall be the responsibility of the Contractor and shall be performed at no additional cost to the Government. Testing shall be performed by a Government approved laboratory. If the Contractor elects to establish testing facilities, no work requiring testing will be permitted until the Contractor's facilities have been inspected and approved by the Contracting Officer. The

first inspection shall be at the expense of the Government. Cost incurred for any subsequent inspections required because of failure of the first inspection will be charged to the Contractor. Field in-place density shall be determined in accordance with ASTM D 1556, ASTM D 2922, Method B. When ASTM D 2922, Method B is used, the calibration curves shall be checked and adjusted using only the sand cone method as described in ASTM D 1556. ASTM D 2922, Method B results in a wet unit weight of soil and when using this method ASTM D 3017 shall be used to determine the moisture content of the soil. The calibration curves furnished with the moisture gauges shall also be checked along with density calibration checks as described in ASTM D 3017, the calibration checks of both the density and moisture gauges shall be made at the beginning of a job on each different type of material encountered and in intervals as directed by the Contracting Officer. Within 24 hours of conclusion of physical tests, 3 copies of test results, including calibration curves and results of calibration tests, shall be furnished to the Contracting Officer. When test results indicate, as determined by the Contracting Officer, that compaction is not as specified, the material shall be removed, replaced and recompacted to meet specification requirements, at no additional expense to the Government. Tests on recompacted areas shall be performed to determine conformance with specification requirements. Inspections and test results shall be certified by a registered professional civil engineer. These certifications shall state that the tests and observations were performed by or under the direct supervision of the engineer and that the results are representative of the materials or conditions being certified by the tests. The following number of tests, if performed at the appropriate time, will be the minimum acceptable for each type operation. One check test using ASTM D 1556 shall be made for every four tests by the nuclear method.

3.8.1 Fill and Backfill Material Gradation

One test per 2000 cubic yards stockpiled or in-place source material. Gradation of fill and backfill material shall be determined in accordance with ASTM C 136, ASTM D 422, or ASTM D 1140.

3.8.2 In-Place Densities:

a. One test per 3,000 square feet, or fraction thereof, of each lift of fill or backfill areas compacted by other than hand-operated machines.

b. One test per 1,000 square feet, or fraction thereof, of each lift of fill or backfill areas compacted by hand-operated machines.

3.8.3 Check Tests on In-Place Densities

If ASTM D 2922, Procedure C is used, in-place densities shall be checked by ASTM D 1556 as follows:

a. One check test per lift for each 90,000 square feet, or fraction thereof, of each lift of fill or backfill compacted by other than hand-operated machines.

b. One check test per lift for each 5,000 square feet of fill or backfill areas compacted by hand-operated machines.

3.8.4 Moisture Contents

In the stockpile, excavation or borrow areas, a minimum of two tests per day per type of material or source of material being placed during stable weather conditions. During unstable weather, tests shall be made as dictated by local conditions and approved by the Contracting Officer.

3.8.5 Optimum Moisture and Laboratory Maximum Density

Tests shall be made for each type material or source of material including borrow material to determine the optimum moisture and laboratory maximum density values. One representative test per 2,000 cubic yards of fill and backfill, or when any change in material occurs which may affect the optimum moisture content or laboratory maximum density.

3.8.6 Tolerance Tests for Subgrades

Continuous checks on the degree of finish specified in paragraph "SUBGRADE PREPARATION" shall be made during construction of the subgrades.

3.9 SUBGRADE AND FILL OR EMBANKMENT PROTECTION

During construction, fills, embankments and excavations shall be kept shaped and drained. Ditches and drains along subgrade shall be maintained in such a manner as to drain effectively at all times. The finished subgrade shall not be disturbed by traffic or other operation and shall be protected and maintained by the Contractor in a satisfactory condition until base or pavement is placed. The storage or stockpiling of materials on the finished subgrade will not be permitted. No base course, or pavement shall be laid until the subgrade has been checked and approved, and in no case shall base, surfacing, or pavement be placed on a muddy, spongy, or frozen subgrade.

- - o 0 o - -

SECTION 02241

AGGREGATE BASE COURSE

PART 1 GENERAL

1.1 REFERENCES

The publications listed below form a part of this specification to the extent referenced. The publications are referred to In the text by basic designation only.

AMERICAN SOCIETY FOR TESTING AND MATERIALS (ASTM)

ASTM C 29	(1991) Unit Weight and Voids in Aggregate.
ASTM C 127	(1988; R-1993) Specific Gravity and Absorption of Course Aggregate.
ASTM C 128	(1993) Specific Gravity and Absorption of Fine Aggregate.
ASTM C 131	(1989) Resistance to Degradation of Small-Size Coarse Aggregate by Abrasion and Impact in the Los Angeles Machine.
ASTM C 136	(1995a) Sieve Analysis of Fine and Coarse Aggregates.
ASTM D 75	(1987; R-1992) Sampling Aggregates.
ASTM D 422	(1963; R 1990) Particle-Size Analysis of Soils.
ASTM D 1556	(1990) Density of Soil in Place by the Sand-Cone Method.
ASTM D 1557	(1991) Moisture-Density Relations of Soils and Soil Aggregate Mixtures Using 10-lb. (4.54-kg) Rammer and 18-In. (457-mm) Drop, Procedure C.
ASTM D 2922	(1991) Density of Soil and Soil Aggregate in Place by Nuclear Methods (Shallow Depth), Method B.
ASTM D 3017	(1988; R-1993) Water Content of Soil and Rock in Place by Nuclear Methods (Shallow Depth).
ASTM D 4318	(1993) Liquid Limit, Plastic Limit, and Plasticity Index of Soils.
ASTM E 11	(1995) Wire-Cloth Sieves for Testing Purposes.

1.2 SUBMITTALS

Government approval is required for submittals with a “GA” designation; submittals having an “FIO” designation are for information only. The following shall be submitted in accordance with Section 01330, SUBMITTAL PROCEDURES.

SD-09, Reports

Test Reports, FIO.

Results of laboratory tests for quality control purposes shall be submitted to the Contracting Officer and approved prior to using the material.

Copies of field test results shall be submitted within 24 hours after the tests are performed.

Calibration curves and related test results shall be submitted prior to using the device or equipment being calibrated.

Sources of all materials shall be selected well in advance of the time that materials will be required in the work. Test results from samples shall be submitted for approval not less than 30 days before material is required for the work.

SD-18, Records

Product Record Documents, FIO.

Only one type of coarse aggregate shall be used on the project and a notification stating which aggregate is to be used shall be submitted.

1.3 DEFINITIONS

1.3.1 Aggregate Base

Aggregate base as used herein is well graded, durable aggregate uniformly moistened and mechanically stabilized by compaction.

1.3.2 Degree of Compaction

Degree of compaction required is expressed as a percentage of the maximum density obtained by the test procedure presented in ASTM D 1557, abbreviated hereinafter as percent laboratory maximum density.

1.4 GENERAL

The work specified herein consists of the construction of a stabilized-aggregate base course. The work shall be performed in accordance with this specification and shall conform to the lines, grades, notes and typical sections shown in the plans.

1.5 WEATHER LIMITATIONS

Base shall not be constructed when the atmospheric temperature is less than 35 degrees F. Base shall not be constructed on subgrades that are frozen or contain frost. If the temperature falls below 35 degrees F, completed areas shall be protected against any detrimental effects of freezing.

1.6 PLANT, EQUIPMENT, MACHINES, AND TOOLS

1.6.1 General Requirements

Plant, equipment, machines, and tools used in the work shall be subject to approval and shall be maintained in satisfactory working condition at all times. Other compacting equipment may be used in lieu of that specified, where it can be demonstrated that the results are equivalent. The equipment shall be adequate and have the capability of producing the results specified.

1.6.2 Steel-Wheeled Rollers

Steel-wheeled rollers shall be the self-propelled type weighing not less than 10 tons, with a minimum weight of 300 pounds per inch width of rear wheel. Wheels of the rollers shall be equipped with adjustable scrapers. The use of vibratory rollers is optional.

1.6.3 Pneumatic-Tired Rollers

Pneumatic-tired rollers shall have four or more tires, each loaded to a minimum of 30,000 pounds and inflated to a minimum pressure of 150 psi. The loading shall be equally distributed to all wheels, and the tires shall be uniformly inflated. Towing equipment shall also be pneumatic-tired.

1.6.4 Mechanical Spreader

Mechanical spreader shall be self-propelled or attached to a propelling unit capable of moving the spreader and material truck. The device shall be steerable and shall have variable speeds forward and reverse. The spreader and propelling unit shall be carried on tracks, rubber tires, or drum-type steel rollers that will not disturb the underlying material. The spreader shall contain a hopper, an adjustable screen, and outboard bumper rolls and be designed to have a uniform, steady flow of material from the hopper. The spreader shall be capable of laying material without segregation across the full width of the lane to a uniform thickness and to a uniform loose density so that when compacted, the layer or layers shall conform to thickness and grade requirements indicated. The Contracting Officer may require a demonstration of the spreader prior to approving use in performance of the work.

1.6.5 Sprinkling Equipment

Sprinkling equipment shall consist of tank trucks, pressure distributors, or other approved equipment designed to apply controlled quantities of water uniformly over variable widths of surface.

1.6.6 Tampers

Tampers shall be of an approved mechanical type, operated by either pneumatic pressure or internal combustion, and shall have sufficient weight and striking power to produce the compaction required.

1.6.7 Straightedge

The Contractor shall furnish and maintain at the site, in good condition, one 10-foot straightedge for each bituminous paver, for use in the testing of the finished surface. Straightedge shall be made available for Government use. Straightedges shall be constructed of aluminum or other lightweight metal and shall have blades of box or box-girder cross section with flat bottom reinforced to insure rigidity and accuracy. Straightedges shall have handles to facilitate movement on pavement.

1.7 STOCKPILING MATERIALS

Materials, including approved material available from excavation and grading, shall be stockpiled in the manner and at locations designated. Before stockpiling of material, storage sites shall be cleared, and to drain. Materials obtained from different sources shall be stockpiled separately.

1.8 SAMPLING AND TESTING

General Requirements: Sampling and testing shall be performed by a Government approved testing laboratory or by facilities furnished by the Contractor. No work requiring testing shall be permitted until the facilities have been inspected and approved. The first inspection shall be at the expense of the Government. Cost incurred for any subsequent inspection required because of failure of the facilities to pass the first inspection will be charged to the Contractor. Tests shall be performed in sufficient numbers and at the locations and times directed to insure that materials and compaction meet specified requirements. Copies of test results shall be furnished to the Contracting Officer within 24 hours of completion of tests.

1.8.1 Test Results

Results shall verify that materials comply with this specification. When a material source is changed, the new material will be tested for compliance. When deficiencies are found, the initial analysis shall be repeated and the material already placed shall be retested to determine the extent of unacceptable material. All in-place unacceptable material shall be replaced or modified as directed by the Contracting Officer.

1.8.2 Sampling

Aggregate samples for laboratory tests shall be taken in accordance with ASTM D 75.

1.8.3 Sieve Analysis

Before starting work, at least one sample of material to be stabilized shall be tested in accordance with ASTM C 136 and ASTM D 422 on sieves conforming to ASTM E 11. After the initial test, a minimum of one analysis shall be performed for each 1000 tons of material placed, with a minimum of three analyses for each day's run until the course is completed.

1.8.4 Liquid Limit and Plasticity Index

One liquid limit and plasticity index shall be performed for each sieve analysis. Liquid limit and plasticity index shall be in accordance with ASTM D 4318.

1.8.5 Laboratory Density

Tests shall provide a moisture-density relationship for the stabilized-aggregate. Tests shall be conducted in accordance with ASTM D 1557.

1.8.6 Wear Tests

Wear tests shall be performed in accordance with ASTM C 131. One test shall be run per 3000 square yards of completed base course. A minimum of one test per aggregate source shall be run.

1.8.7 Sampling and Testing During Construction

Quality control sampling and testing during construction shall be performed as specified in paragraph "FIELD QUALITY CONTROL."

PART 2 PRODUCTS

2.1 MATERIALS

2.1.1 Aggregates

Aggregates shall consist of crushed stone, crushed gravel, angular sand, or other approved materials. Aggregates shall be durable and sound, free from lumps of clay, organic matter, objectionable coatings, and other foreign material. Material retained on a No. 4 sieve shall be known as coarse aggregate and that passing the No. 4 sieve shall be known as binder material.

2.1.1.1 Coarse Aggregate

Coarse aggregates, consisting of angular fragments of uniform density and quality, shall have a percentage of wear not to exceed 50 percent after 500 revolutions when tested in accordance with ASTM C 131. The amount of flat and elongated particles shall not exceed 30 percent. A flat particle is one having a ratio of width to thickness greater than 3, and an elongated particle is one having a ratio of length to width greater than 3.

a. Crushed Gravel: Crushed gravel shall be manufactured from gravel particles 50 percent of which by weight are retained on the maximum size gradation sieve specified.

b. Crushed Stone: Crushed stone retained on each sieve specified shall contain at least 50 percent by weight of crushed pieces having two or more freshly fractured faces with the area of each face being at least equal to 75 percent of the smallest midsectional area of the piece. When two fractures are adjacent, the angle between the planes of the fractures must be at least 30 degrees to count as two fractured faces.

2.1.2 Binder Material

Binder material shall consist of screenings, angular sand, or other finely divided mineral matter processed or naturally combined with the coarse aggregate. Liquid-limit and plasticity-index requirements shall apply to any component that is blended to meet the required gradation and shall also apply to the completed course. The portion of any component or of the completed course passing the No. 40 sieve shall be either nonplastic or have a liquid limit not greater than 25 and a plasticity index not greater than 5.

2.1.2.1 Gradation

Requirements for gradation shall apply to the completed base course. The aggregates shall have a 1-inch maximum size and shall be continuously graded within the following limits:

Sieve Designation	**Percentage by Weight Passing Square-Mesh Sieve***
1"	100
3/4"	80 - 100
No. 4	30 - 60
No. 10	20 - 45
No. 200	3 - 10

* The table is based on aggregates of uniform specific gravity and the percentages passing the various sieves are subject to appropriate corrections in accordance with ASTM C 127 and C 128 when aggregates of varying specific gravity are used.

PART 3 EXECUTION

3.1 GENERAL REQUIREMENTS

When the base is constructed in more than one layer, the previously constructed layer shall be cleaned of loose and foreign matter by sweeping with power sweepers or power brooms, except that hand brooms may be used in areas where power cleaning is not practicable. Adequate drainage shall be provided during the entire period of construction to prevent water from collecting or standing on the area to be stabilized. Line and grade stakes shall be provided as necessary for control. Grade stakes shall be in lines parallel to the centerline of the area under construction and suitably spaced for string lining.

3.2 OPERATION OF AGGREGATE SOURCES

Aggregate sources shall be cleared, stripped, and excavated to working depths in a manner that produces excavation faces that are as nearly vertical as practicable for the materials being excavated. Strata of unsuitable materials overlying or occurring in the deposit shall be wasted. Methods of operating aggregate sources and the processing and blending of the materials may be changed or modified if necessary to obtain material conforming to the specified requirements. Upon completion of the work, aggregate sources shall be conditioned to drain readily and be left in a satisfactory condition. Aggregates shall be obtained from off-site sources.

3.3 PREPARATION OF UNDERLYING COURSE

3.3.1 General Requirements

Before constructing stabilized-aggregate base course, the previously constructed underlying course shall be cleaned of foreign substances. Surface of underlying course shall meet the specified compaction and surface tolerances. Subgrade shall conform to Section: 02225 - EARTHWORK FOR ROADWAYS, RAILROADS, AND AIR FIELDS. Ruts or soft, yielding spots that may appear in the underlying course, areas having inadequate compaction, and deviations of the surface from requirements specified shall be corrected. For cohesionless underlying materials containing sands, sand gravels, or any other cohesionless material in harmful quantities, the surface shall be stabilized with aggregate prior to placement of the stabilized-aggregate course. Stabilization may be accomplished by mixing base course material into the underlying course and compacting by approved methods. Stabilized material will be considered as part of the underlying course and shall meet all requirements for the underlying course. Finished underlying course shall not be disturbed by traffic or other operations and shall be maintained in a satisfactory condition until base course is placed.

3.3.2 Grade Control

Underlying material shall be excavated to sufficient depth for the required stabilized course thickness so that the finished stabilized course with the subsequent surface course will meet the fixed grade. Finished and completed stabilized area shall conform to the lines, grades, cross section, and dimensions indicated.

3.4 INSTALLATION

3.4.1 Mixing and Placing

Materials shall be mixed by the stationary plant or traveling plant, and placed in such a manner as to obtain uniformity of the stabilized aggregate base course material and at a uniform optimum water content for compaction. The Contractor shall make such adjustments in mixing or placing procedures or in equipment to obtain the true grades, to minimize segregation and degradation, to reduce or accelerate loss or increase of water, and to insure a satisfactory base course.

3.4.2 Edges of Base Course

Approved material shall be placed along edges of stabilized aggregate base course in such quantities as will compact to thickness of the course being constructed, or to the thickness of each layer in a multiple layer course, allowing in each operation at least a 1-foot width of the shoulder to be rolled and compacted simultaneously with rolling and compacting of each layer of base course.

3.4.3 Compaction

Each layer of stabilized aggregate base course including shoulders shall be compacted to 100%. Water content shall be maintained at optimum. Density of compacted mixture shall be as shown on the drawings. Rolling shall begin at the outside edge of the surface and proceed to the center, overlapping on successive trips at least one-half the width of the roller. Alternate trips of the roller shall be slightly different lengths. Speed of the roller shall be such that displacement of the aggregate does not occur. Areas inaccessible to the rollers shall be compacted with mechanical tampers, and shall be shaped and finished by hand methods.

3.4.4 Layer Thickness

Compacted thickness of the stabilized course shall be as indicated. No layer shall be in excess of 8 inches nor less than 3 inches in compacted thickness.

3.4.5 Finishing

The surface of the top layer shall be finished to grade and cross section shown. Finished surface shall be of uniform texture. Light blading during compaction may be necessary for the finished surface to conform to the lines, grades, and cross sections. Should the surface for any reason become rough, corrugated, uneven in texture, or traffic marked prior to completion, such unsatisfactory portion shall be scarified, reworked, recompacted, or replaced as directed.

3.4.5.1 Smoothness

Surface of each layer shall show no deviations in excess of 3/8-inch when tested with the 10-foot straightedge. Deviations exceeding this amount shall be corrected by removing material and replacing with new material, or by reworking existing material and compacting, as directed.

3.4.5.2 Thickness Control

Compacted thickness of the stabilized base course shall be within 1/2-inch of the thickness indicated. Where the measured thickness is more than 1/2-inch deficient, such areas shall be corrected by scarifying, adding new material of proper gradation, reblading, and recompacting as directed. Where the measured thickness is more than 1/2-inch thicker than indicated, the course shall be considered as conforming to the specified thickness requirements. Average job thickness shall be the average of all thickness measurements taken for the job, but shall be within 1/4-inch of the thickness indicated.

3.5 FIELD QUALITY CONTROL

3.5.1 Field Density

Field in-place density shall be determined in accordance with ASTM D 1556 or ASTM D 2922, Method B. When ASTM D 2922, Method B is used, the calibration curves shall be checked, and adjusted if necessary, using the sand cone method as described in paragraph "Calibration" of the ASTM publication. ASTM D 2922, Method B results in a wet unit weight of soil, and when using this method, ASTM D 3017 shall be used to determine the moisture content of the soil. The calibration curves furnished with the moisture gauges shall be checked along with density calibration checks as described in ASTM D 3017. If ASTM D 2922 is used, in-place densities shall be checked by ASTM D 1556 at least once per lift for each square yard of stabilized material. Calibration curves and calibration tests results shall be furnished within 24 hours of the conclusion of the tests. At least one field density test shall be performed for each 250 square yards of each layer of base material. One check test by ASTM shall be made for every four tests performed by the Nuclear method.

3.5.2 Smoothness

Measurements for deviation from grade and cross section shown shall be taken in successive positions parallel to the road centerline with a 10-foot straightedge. Measurements shall also be taken perpendicular to the road centerline at 50 foot intervals.

3.5.3 Thickness

Thickness of the stabilized course shall be measured at intervals in such a manner as to ensure one measurement for each 500 square yards of stabilized course. Measurements shall be made in 3-inch diameter test holes penetrating the stabilized course.

3.6 TRAFFIC

Completed portions of the area may be opened to traffic, provided there is no marring or distorting of the surface by the traffic. Heavy equipment shall not be permitted except when necessary to construction, and then the area shall be protected against marring or damage to the completed work.

3.7 MAINTENANCE

The stabilized-aggregate base course shall be maintained in a satisfactory condition until accepted. Maintenance shall include immediate repairs to any defects and shall be repeated as often as necessary to keep the area intact.

3.8 DISPOSAL OF UNSATISFACTORY MATERIALS

Removed in-place materials that are unsuitable for stabilization, material that is removed for the required correction of defective areas, and waste material and debris shall be disposed of in accordance with Section 02225, EARTHWORK FOR ROADWAYS, RAILROADS, AND AIRFIELDS.

- - o 0 o - -

SECTION 02511A - CONCRETE SIDEWALKS

PART 1 - GENERAL

1.1 REFERENCES

The publications listed below form a part of this specification to the extent referenced. The publications are referred to in the text by basic designation only.

AMERICAN SOCIETY FOR TESTING AND MATERIALS (ASTM)

ASTM C 94	(1992) Ready-Mixed Concrete
ASTM C 143	(1990a) Slump of Hydraulic Cement Concrete
ASTM C 309	(1991) Liquid Membrane-Forming Compounds for Curing Concrete
ASTM D 1751	(1983; R 1991) Preformed Expansion Joint Filler for Concrete Paving and Structural Construction (Nonextruding and Resilient Bituminous Types)
ASTM D 1752	(1984; R 1992) Preformed Sponge Rubber and Cork Expansion Joint Fillers for Concrete Paving and Structural Construction

CORPS OF ENGINEERS (COE)

COE CRD-C 527	(1988) Standard Specification for Joint Sealants, Cold-Applied, Non-Jet-Fuel-Resistant, for Rigid and Flexible Pavements

FEDERAL SPECIFICATIONS (FS)

FS SS-S-1401	(Rev C; Notice 1) Sealant, Joint, Non-Jet-Fuel-Resistant, Hot-Applied, for Portland Cement and Asphalt Concrete Pavements

1.2 SUBMITTALS

Government approval is required for submittals with a "GA" designation; submittals having an "FIO" designation are for information only. The following shall be submitted in accordance with Section 01330 - SUBMITTAL PROCEDURES:

SD-18 Records

Concrete; FIO.

Copies of certified delivery tickets for all concrete used in the construction.

1.3 WEATHER LIMITATIONS

Concrete placement shall be discontinued when the air temperature is below 40 degrees F and is falling.

1.4 PLANT, EQUIPMENT, MACHINES, AND TOOLS

Plant, equipment, machines, and tools used in the work shall be subject to approval and shall be maintained in a satisfactory working condition at all times.

PART 2 - PRODUCTS

2.1 CONCRETE

ASTM C 94, cement type I normal. Only one brand of any one type of cement shall be used for exposed concrete surfaces of any individual structure. Concrete mixes shall be proportioned to obtain compressive strength in 28 days of 3000 psi. The compressive strength shall be reached in 7 days when high-early-strength cement is used. The maximum size of aggregate shall be 1-1/2 inches. Total air content of exterior concrete shall be maintained at 5 to 7 percent by volume of concrete. Slump shall be not more than 3 inches as determined by ASTM C 143.

2.2 CURING MATERIALS

Impervious sheet or membrane-forming curing compound. Impervious sheet shall be white opaque polyethylene 4 mil thick, waterproof kraft paper, or polyethylene-coated burlap. Membrane-forming curing compound shall be white pigmented and shall conform to ASTM C 309, Type 2.

2.3 JOINT FILLER STRIPS

Expansion joint filler shall be premolded, nonextruding type for use in concrete conforming to ASTM D 1751 or ASTM D 1752, 3/8-inch thick, unless otherwise indicated.

2.4 JOINT SEALANTS

2.4.1 Joint Sealant, Cold-Applied

Joint sealant, cold-applied shall conform to COE CRD-C 527.

2.4.2 Joint Sealant, Hot-Poured

Joint sealant, hot-poured shall conform to FS SS-S-1401.

2.5 FORM WORK

Form work shall be designed and constructed to insure that the finished concrete will conform accurately to the indicated dimensions, lines, and elevations, and within the tolerances specified. Forms shall be of a height equal to the full depth of the finished sidewalk.

PART 3 - EXECUTION

3.1 SUBGRADE PREPARATION

The subgrade shall be constructed to the specified grade and cross section prior to concrete placement. Subgrade shall be placed and compacted to conform with applicable requirements of Section 02210 - GRADING. The subgrade shall be in a moist condition when concrete is placed. The subgrade shall be prepared and protected so as to produce a subgrade free from frost when the concrete is deposited.

3.2 FORM SETTING

Forms for sidewalks shall be set with the upper edge true to line and grade with an allowable tolerance of 1/8 inch in any 10-foot long section. After forms are set, grade and alignment shall be checked with a 10-foot straightedge. Forms shall have a transverse slope 1/4-inch per foot with the low side away from the building . Side forms shall not be removed for 12 hours after finishing has been completed.

3.3 SIDEWALK CONCRETE PLACEMENT AND FINISHING

3.3.1 Formed Sidewalks

Concrete shall be placed in the forms in one layer of such thickness that when consolidated and finished the sidewalks will be of the thickness indicated. After concrete has been placed in the forms, a strike-off guided by side forms shall be used to bring the surface to proper section to be compacted. The concrete shall be consolidated with an approved vibrator, and the surface shall be finished to grade with a wood float, bull float, or darby, edged and broom finished.

3.3.2 Concrete Finishing

After straightedging, when most of the water sheen has disappeared, and just before the concrete hardens, the surface shall be finished to a smooth and uniformly fine granular or sandy texture free of waves, irregularities, or tool marks. A scored surface shall be produced by brooming with a fiber-bristle brush in a direction transverse to that of the traffic.

3.3.3 Edge and Joint Finishing

All slab edges, including those at formed joints, shall be finished carefully with an edger having a radius of 1/8 inch. Transverse joint shall be edged before brooming, and the brooming shall eliminate the flat surface left by the surface face of the edger. Corners and edges which have crumbled and areas which lack sufficient mortar for proper finishing shall be cleaned and filled solidly with a properly proportioned mortar mixture and then finished.

3.3.4 Surface and Thickness Tolerances

Finished surfaces shall not vary more than 5/16 inch from the testing edge of a 10-foot straightedge. Permissible deficiency in section thickness will be up to 0.25 inch.

3.4 SIDEWALK JOINTS

Sidewalk joints shall be constructed to divide the surface into rectangular areas. Transverse contraction joints shall be spaced at a distance equal to the sidewalk width or 5 feet on centers, whichever is less, and shall be continuous across the slab. Longitudinal contraction joints shall be constructed along the centerline of all sidewalks 10 feet or more in width. Transverse expansion joints shall be installed at intervals not exceeding 40 feet on center where walk does not abut curb and at sidewalk returns, unless otherwise indicated on the drawings. Expansion joints shall be formed about structures and features which project through or into the sidewalk pavement.

3.4.1 Contraction Joints

The contraction joints shall be formed in the fresh concrete by cutting a groove in the top portion of the slab to a depth of at least one-fourth of the sidewalk slab thickness.

3.4.2 Expansion Joints

Expansion joints shall be formed with 3/8 -inch joint filler strips. Joint filler shall be placed with top edge 1/4 inch below the surface and shall be held in place to prevent warping of the filler during floating and finishing. Immediately after finishing operations are completed, joint edges shall be rounded with an edging tool having a radius of 1/8 inch, and concrete over the joint filler shall be removed. At the end of the curing period, expansion joints shall be carefully cleaned and filled with joint sealer. Concrete at the joint shall be surface dry and the atmospheric and pavement temperatures shall be above 50 degrees F at the time of application of joint-sealing materials. Joints shall be filled with sealer flush with the concrete surface in such manner as to minimize spilling on the walk surface. Spilled sealing material shall be removed immediately and the surface of the walk cleaned.

3.5 CURING AND PROTECTION

3.5.1 General Requirements

Concrete shall be protected against loss of moisture and rapid temperature changes for at least 7 days from the beginning of the curing operation. Unhardened concrete shall be protected from rain and flowing water. All equipment needed for adequate curing and protection of the concrete shall be on hand and ready for use before actual concrete placement begins. Protection shall be provided as necessary to prevent cracking of the pavement due to temperature changes during the curing period. Membrane forming curing compound shall be applied in accordance with the manufacturer's recommendations.

3.5.2 Backfilling

After curing, debris shall be removed and the area adjoining the concrete shall be backfilled, graded, and compacted to conform to the surrounding area in accordance with lines and grades indicated.

3.5.3 Protection

Completed concrete shall be protected from damage until accepted. The Contractor shall repair damaged concrete and clean concrete discolored during construction.

3.6 SURFACE DEFICIENCIES AND CORRECTIONS

Areas which exhibit excessive cracking, discoloration, form marks, or tool marks or which exceed plan grade, surface smoothness, or thickness tolerances shall be corrected as directed by the Contracting Officer.

- - o 0 o - -

SECTION 02660

WATER DISTRIBUTION SYSTEMS

PART 1 - GENERAL

1.1 REFERENCES

The publications listed below form a part of this specification to the extent referenced. The publications are referred to in the text by basic designation only.

AMERICAN RAILWAY ENGINEERING ASSOCIATION (AREA)

AREA MRE	(1994) Manual for Railway Engineering (Fixed Properties): Chapter 1, Roadway and Ballast

AMERICAN SOCIETY FOR TESTING AND MATERIALS (ASTM)

ASTM A 36	(1994a) Carbon Structural Steel
ASTM A 53	(1993a) Pipe, Steel, Black and Hot-Dipped, Zinc-Coated Welded and Seamless
ASTM B 88	(1993a) Seamless Copper Water Tube
ASTM C 76	(1995) Reinforced Concrete Culvert, Storm Drain, and Sewer Pipe
ASTM D 1599	(1988) Short-Time Hydraulic Failure Pressure of Plastic Pipe, Tubing, and Fittings
ASTM D 1784	(1992) Rigid Poly(Vinyl Chloride) (PVC) Compounds and Chlorinated Poly(Vinyl Chloride) (CPVC) Compounds
ASTM D 1785	(1993) Poly(Vinyl Chloride) (PVC) Plastic Pipe, Schedules 40, 80, and 120
ASTM D 2241	(1993) Poly(Vinyl Chloride) (PVC) Pressure-Rated Pipe (SDR Series)
ASTM D 2464	(1993) Threaded Poly(Vinyl Chloride) (PVC) Plastic Pipe Fittings, Schedule 80
ASTM D 2466	(1993) Poly(Vinyl Chloride) (PVC) Plastic Pipe Fittings, Schedule 40
ASTM D 2467	(1993) Socket-Type Poly(Vinyl Chloride) (PVC) Plastic Pipe Fittings, Schedule 80
ASTM D 2564	(1993) Solvent Cements for Poly(Vinyl Chloride) (PVC) Plastic Piping Systems

ASTM D 2657	(1990) Heat-Joining Polyolefin Pipe and Fittings
ASTM D 2774	(1972; R 1983) Underground Installation of Thermoplastic Pressure Piping
ASTM D 2855	(1993) Making Solvent-Cemented Joints with Poly(Vinyl Chloride) (PVC) Pipe and Fittings
ASTM D 2996	(1995) Filament-Wound "Fiberglass" (Glass-Fiber-Reinforced Thermosetting-Resin) Pipe
ASTM D 2997	(1995) Centrifugally Cast "Fiberglass" (Glass-Fiber-Reinforced-Thermosetting-Resin) Pipe
ASTM D 3839	(1994a) Underground Installation of "Fiberglass" (Glass-Fiber-Reinforced Thermosetting Resin) Pipe
ASTM F 477	(1993) Elastomeric Seals (Gaskets) for Joining Plastic Pipe

AMERICAN SOCIETY OF MECHANICAL ENGINEERS (ASME)

ASME B1.20.1	(1983; R 1992) Pipe Threads, General Purpose (Inch)
ASME B16.1	(1989) Cast Iron Pipe Flanges and Flanged Fittings
ASME B16.3	(1992) Malleable Iron Threaded Fittings, Classes 150 and 300
ASME B16.26	(1988) Cast Copper Alloy Fittings for Flared Copper Tubes
ASME B36.10M	(1985; R 1994) Welded and Seamless Wrought Steel Pipe

AMERICAN WATER WORKS ASSOCIATION (AWWA)

AWWA B300	(1992) Hypochlorites
AWWA B301	(1992) Liquid Chlorine
AWWA C104	(1990) Cement-Mortar Lining for Ductile-Iron Pipe and Fittings for Water
AWWA C105	(1988) Polyethylene Encasement for Ductile-Iron Piping for Water and Other Liquids
AWWA C110	(1993) Ductile-Iron and Gray-Iron Fittings, 3 In. Through 48 In. (75 mm through 1200 mm), for Water and Other Liquids
AWWA C111	(1990) Rubber-Gasket Joints for Ductile-Iron Pressure Pipe and Fittings

AWWA C115	(1988) Flanged Ductile-Iron Pipe with Threaded Flanges
AWWA C151	(1991) Ductile-Iron Pipe, Centrifugally Cast, for Water or Other Liquids
AWWA C153	(1994) Ductile-Iron Compact Fittings, 3 In. Through 16 In., for Water and Other Liquids
AWWA C200	(1991) Steel Water Pipe - 6 In. (150 mm) and Larger
AWWA C203	(1991) Coal-Tar Protective Coatings and Linings for Steel Water Pipelines - Enamel and Tape - Hot-Applied
AWWA C205	(1989) Cement-Mortar Protective Lining and Coating for Steel Water Pipe - 4 In. and Larger - Shop Applied
AWWA C207	(1994) Steel Pipe Flanges for Waterworks Service - Sizes 4 In. Through 144 In.
AWWA C208	(1983; C208a; R 1989) Dimensions for Fabricated Steel Water Pipe Fittings
AWWA C300	(1989) Reinforced Concrete Pressure Pipe, Steel-Cylinder Type, for Water and Other Liquids
AWWA C301	(1992) Prestressed Concrete Pressure Pipe, Steel-Cylinder Type, for Water and Other Liquids
AWWA C303	(1987; Errata Jan 1988) Reinforced Concrete Pressure Pipe, Steel Cylinder Type, Pretensioned, for Water and Other Liquids
AWWA C500	(1993) Gate Valves for Water and Sewerage Systems
AWWA C502	(1985) Dry-Barrel Fire Hydrants
AWWA C503	(1988) Wet-Barrel Fire Hydrants
AWWA C504	(1994) Rubber-Seated Butterfly Valves
AWWA C509	(1994) Resilient-Seated Gate Valves for Water and Sewerage Systems
AWWA C600	(1993) Installation of Ductile-Iron Water Mains and Their Appurtenances
AWWA C606	(1987) Grooved and Shouldered Joints
AWWA C651	(1992) Disinfecting Water Mains

AWWA C700	(1990; C700a) Cold-Water Meters - Displacement Type, Bronze Main Case
AWWA C701	(1988) Cold-Water Meters - Turbine Type, for Customer Service
AWWA C702	(1992) Cold-Water Meters - Compound Type
AWWA C703	(1986) Cold-Water Meters - Fire Service Type
AWWA C704	(1992) Cold-Water Meters - Propeller Type for Main Line Applications
AWWA C706	(1991; C706a) Direct-Reading Remote-Registration Systems for Cold-Water Meters
AWWA C707	(1982; R 1992) Encoder-Type Remote-Registration Systems for Cold-Water Meters
AWWA C800	(1989) Underground Service Line Valves and Fittings
AWWA C900	(1989; C900a) Polyvinyl Chloride (PVC) Pressure Pipe, 4 In. Through 12 In., for Water Distribution
AWWA C901	(1988; Errata Apr 1988) Polyethylene (PE) Pressure Pipe and Tubing, 1/2 In. Through 3 In., for Water Service
AWWA C905	(1988) Polyvinyl Chloride (PVC) Water Transmission Pipe, Nominal Diameters 14 In. Through 36 In.
AWWA C950	(1988) Fiberglass Pressure Pipe
AWWA M23	(1980) Manual: PVC Pipe - Design and Installation

ASBESTOS CEMENT PIPE PRODUCERS ASSOCIATION (ACPPA)

ACPPA-01	(1988) Recommended Work Practices for A/C Pipe

DUCTILE IRON PIPE RESEARCH ASSOCIATION (DIPRA)

DIPRA-01	(1992; Errata May 1993) Thrust Restraint Design for Ductile Iron Pipe

MANUFACTURERS STANDARDIZATION SOCIETY OF THE VALVE AND FITTINGS INDUSTRY (MSS)

MSS SP-80	(1987) Bronze Gate, Globe, Angle and Check Valves

NATIONAL FIRE PROTECTION ASSOCIATION (NFPA)

NFPA 24	(1992) Installation of Private Fire Service Mains and Their Appurtenances

NFPA 49	(1991) Hazardous Chemicals Data
NFPA 325M	(1991) Fire Hazard Properties of Flammable Liquids, Gases, and Volatile Solids
NFPA 704	(1990) Identification of the Fire Hazards of Materials
NFPA 1961	(1992) Fire Hose

NSF INTERNATIONAL (NSF)

NSF Std 14	(1965; Rev Nov 1990) Plastics Piping System Components and Related Materials

STEEL STRUCTURES PAINTING COUNCIL (SSPC)

SSPC Paint 21	(1991) White or Colored Silicone Alkyd Paint
SSPC Paint 25	(1991) Red Iron Oxide, Zinc Oxide, Raw Linseed Oil and Alkyd Primer (without Lead and Chromate Pigments)

1.2 PIPING

This section covers water service lines, and connections to building service at a point approximately 5 feet outside buildings and structures to which service is required. The Contractor shall have a copy of the manufacturer's recommendations for each material or procedure to be utilized available at the construction site at all times.

1.2.1 Supply Lines 3 Inches or Larger

Piping for water supply lines 3 inches or larger shall be ductile iron, polyvinyl chloride (PVC) plastic through 36 inch nominal diameter, filament-wound reinforced or centrifugally cast reinforced thermosetting resin, reinforced plastic mortar pressure pipe, steel, or reinforced concrete, unless otherwise shown or specified.

1.2.2 Sprinkler Supply Lines

Piping for water lines supplying sprinkler systems for building fire protection shall conform to NFPA 24 from the point of connection with the water distribution system to the building 5 foot line.

1.2.3 Plastic Pipe

All plastic piping system components (PVC, polyethylene, thermosetting resin and reinforced plastic mortar pressure) intended for transportation of potable water shall comply with NSF Std 14 and shall be legibly marked with their symbol.

1.2.4 Excavation, Trenching, and Backfilling

Excavation, trenching, and backfilling shall be in accordance with the applicable provisions of Section 02222 - EXCAVATION, TRENCHING, AND BACKFILLING FOR UTILITIES SYSTEMS, except as modified herein.

1.3 SUBMITTALS

Government approval is required for submittals with a "GA" designation; submittals having an "FIO" designation are for information only. The following shall be submitted in accordance with Section 01330 - SUBMITTAL PROCEDURES:

SD-06 Instructions

Installation; FIO.

The manufacturer's recommendations for each material or procedure to be utilized.

SD-08 Statements

Waste Water Disposal Method; FIO.

The method proposed for disposal of waste water from hydrostatic tests and disinfection, prior to performing hydrostatic tests.

Satisfactory Installation; FIO.

A statement signed by the principal officer of the contracting firm stating that the installation is satisfactory and in accordance with the contract drawings and specifications and the manufacturer's prescribed procedures and techniques, upon completion of the project and before final acceptance.

SD-09 Reports

Bacteriological Disinfection; FIO.

Test results from commercial laboratory verifying disinfection.

SD-13 Certificates

Manufacturer's Representative; FIO.

The name and qualifications of the manufacturer's representative and written certification from the manufacturer that the representative is technically qualified in all phases of PE, RTRP, and/or RPMP pipe laying and jointing and experienced to supervise the work and train the Contractor's field installers, prior to commencing installation.

Installation; FIO.

A statement signed by the manufacturer's field representative certifying that the Contractor's personnel are capable of properly installing the pipe on the project.

Meters; FIO.

Manufacturer's certificate stating that each meter furnished has been tested for accuracy of registration and compliance with the accuracy and capacity requirements of the appropriate AWWA standard.

1.4 HANDLING

Pipe and accessories shall be handled so as to ensure delivery to the trench in sound, undamaged condition. Particular care shall be taken not to injure the pipe coating or lining. If the coating or lining of any pipe or fitting is damaged, the repair shall be made by the Contractor at his expense in a satisfactory manner. No other pipe or material of any kind shall be placed inside a pipe or fitting after the coating has been applied. Pipe shall be carried into position and not dragged. Use of pinch bars and tongs for aligning or turning pipe will be permitted only on the bare ends of the pipe. The interior of pipe and accessories shall be thoroughly cleaned of foreign matter before being lowered into the trench and shall be kept clean during laying operations by plugging or other approved method. Before installation, the pipe shall be inspected for defects. Material found to be defective before or after laying shall be replaced with sound material without additional expense to the Government. Rubber gaskets that are not to be installed immediately shall be stored in a cool and dark place.

1.4.1 Coated and Wrapped Steel Pipe

Coated and wrapped steel pipe shall be handled in conformance with AWWA C203.

1.4.2 Polyethylene (PE) Pipe

PE pipe, fittings, and accessories shall be handled in conformance with AWWA C901.

1.4.3 Miscellaneous Plastic Pipe and Fittings

Polyvinyl Chloride (PVC), Reinforced Thermosetting Resin Pipe (RTRP), and Reinforced Plastic Mortar Pressure (RPMP) pipe and fittings shall be handled and stored in accordance with the manufacturer's recommendations. Storage facilities shall be classified and marked in accordance with NFPA 704, with classification as indicated in NFPA 49 and NFPA 325M.

PART 2 - PRODUCTS

2.1 PIPE

Pipe shall conform to the respective specifications and other requirements specified below.

2.1.1 Plastic Pipe

2.1.1.1 Polyethylene Plastic (PE)

Pipe, tubing, and heat-fusion fittings shall conform to AWWA C901.

2.1.1.2 Polyvinyl Chloride (PVC) Plastic Pipe

Pipe, couplings and fittings shall be manufactured of material conforming to ASTM D 1784, Class 12454B.

a. Pipe Less Than 4 inch Diameter:

(1) Screw-Joint: Pipe shall conform to dimensional requirements of ASTM D 1785 Schedule 80, with joints meeting requirements of 150 psi working pressure, 200 psi hydrostatic test pressure, unless otherwise shown or specified. Pipe couplings when used, shall be tested as required by ASTM D 2464.

(2) Elastomeric-Gasket Joint: Pipe shall conform to dimensional requirements of ASTM D 1785. Schedule 40 with joints meeting the requirements of 150 psi working pressure, 200 psi hydrostatic test pressure, unless otherwise shown or specified, or it may be pipe conforming to requirements of ASTM D 2241, elastomeric joint, with the following applications:

SDR	Maximum Working Pressure psi	Minimum Hydrostatic Pressure psi
26	100	133
21	120	160
17	150	200
13.5	200	266

(3) Solvent Cement Joint: Pipe shall conform to dimensional requirements of ASTM D 1785 or ASTM D 2241 with joints meeting the requirements of 150 psi working pressure and 200 psi hydrostatic test pressure.

b. Pipe 4 Inch through 12 Inch Diameter: Pipe, couplings and fittings shall conform to AWWA C900, Class 150, CIOD pipe dimensions, elastomeric-gasket joint, unless otherwise shown or specified.

2.1.2 Reinforced Plastic Mortar Pressure (RPMP) Pipe

AWWA C950.

2.1.3 Reinforced Thermosetting Resin Pipe (RTRP)

Pipe shall have a quick-burst strength greater than or equal to four times the normal working pressure of the pipe. The quick-burst strength test shall conform to the requirements of ASTM D 1599.

2.1.3.1 RTRP-I

RTRP-I shall conform to ASTM D 2996, except pipe shall have an outside diameter equal to cast iron outside diameter or standard weight steel pipe. The pipe shall be suitable for a normal working pressure of 150 psi at 73 degrees F. The inner surface of the pipe shall have a smooth uniform continuous resin-rich surface liner conforming to ASTM D 2996.

2.1.3.2 RTRP-II

RTRP-II shall conform to ASTM D 2997. Pipe shall have an outside diameter equal to standard weight steel pipe.

2.1.4 Ductile-Iron Pipe

Ductile-iron pipe shall conform to AWWA C151, working pressure not less than 150 psi, unless otherwise shown or specified. Pipe shall be cement-mortar lined in accordance with AWWA C104. Linings shall be standard. Flanged ductile iron pipe with threaded flanges shall be in accordance with AWWA C115.

2.1.5 Copper Tubing

Copper tubing shall conform to ASTM B 88, Type K, annealed.

2.2 FITTINGS AND SPECIALS

2.2.1 Polyvinyl Chloride (PVC) Pipe

a. For pipe less than 4 inch diameter, fittings for threaded pipe shall conform to requirements of ASTM D 2464, threaded to conform to the requirements of ASME B1.20.1 for use with Schedule 80 pipe and fittings, fittings for solvent cement jointing shall conform to ASTM D 2466 or ASTM D 2467, and fittings for elastomeric-gasket joint pipe shall be iron conforming to AWWA C110 or AWWA C111. Iron fittings and specials shall be cement-mortar lined (standard thickness) in accordance with AWWA C104.

b. For pipe 4 inch diameter and larger, fittings and specials shall be iron, bell end in accordance with AWWA C110, 150 psi pressure rating unless otherwise shown or specified, except that profile of bell may have special dimensions as required by the pipe manufacturer; or may be fittings and specials of the same material as the pipe with elastomeric gaskets, all in conformance with AWWA C900. Iron fittings and specials shall be cement-mortar lined (standard thickness) in accordance with AWWA C104. Fittings shall be bell and spigot or plain end pipe, or as applicable. Ductile iron compact fittings shall be in accordance with AWWA C153.

2.2.2 RTRP and RPMP Pipe

Fittings and specials shall be compatible with the pipe supplied. Filament wound or molded fittings up to 6 inches shall conform to AWWA C950. Iron fittings shall be cement-mortar lined in accordance with AWWA C104 and shall conform to AWWA C110 and AWWA C111. Fittings shall be suitable for working and testing pressures specified for the pipe.

2.2.3 Ductile-Iron Pipe

Fittings and special shall be suitable for 150 psi pressure rating, unless otherwise specified. Fittings and specials for mechanical joint pipe shall conform to AWWA C110. Fittings and specials for use with push-on joint pipe shall conform to AWWA C110 and AWWA C111. Fittings and specials for grooved and shouldered end pipe shall conform to AWWA C606. Fittings and specials shall be cement-mortar lined (standard thickness) in accordance with AWWA C104. Ductile iron compact fittings shall conform to AWWA C153.

2.2.4 Copper Tubing

Fittings and specials shall be flared and conform to ASME B16.26.

2.3 JOINTS

2.3.1 Plastic Pipe

2.3.1.1 Polyethylene (PE) Pipe

Joints for pipe fittings and couplings shall be strong tight joints as specified for PE in Paragraph INSTALLATION. Joints connecting pipe of differing materials shall be made in accordance with the manufacturer's recommendation as approved by the Contracting Officer.

2.3.1.2 Polyvinyl Chloride Pipe

Joints, fittings, and couplings shall be as specified for PVC pipe. Joints connecting pipe of differing materials shall be made in accordance with the manufacturer's recommendations as approved by the Contracting Officer.

2.3.2 RPMP Pipe

Joints shall be mechanical or bell and spigot type with elastomeric gasket.

2.3.3 RTRP

2.3.3.1 RTRP-I, Grade I and 2

Joints shall be bell and spigot with elastomeric gasket, mechanical coupling with elastomeric gasket, threaded and bonded coupling, or tapered bell and spigot with compatible adhesive. All RTRP-I materials shall be products of a single manufacturer.

2.3.3.2 RTRP-II, Grade 1 and 2

Joints shall be the bell and spigot type with elastomeric gasket, bell and spigot with adhesive, butt-jointed with adhesive bonded reinforced overlay, mechanical, flanged, threaded or commercially available proprietary joints, provided they are capable of conveying water at the pressure and temperature of the pipe.

2.3.4 Ductile-Iron Pipe

a. Mechanical joints shall be of the stuffing box type and shall conform to AWWA C111.

b. Push-on joints shall conform to AWWA C111.

c. Rubber gaskets and lubricant shall conform to the applicable requirements of AWWA C111.

2.3.5 Bonded Joints

For all ferrous pipe, a metallic bond shall be provided at each joint, including joints made with flexible couplings, caulking, or rubber gaskets, of ferrous-metallic piping to effect continuous conductivity. The bond wire shall be Size 1/0 copper conductor suitable for direct burial shaped to stand clear of the joint. The bond shall be of the thermal weld type.

2.3.6 Isolation Joints

Isolation joints shall be installed between nonthreaded ferrous and nonferrous metallic pipe, fittings and valves. Isolation joints shall consist of a sandwich-type flange isolation gasket of the dielectric type, isolation washers, and isolation sleeves for flange bolts. Isolation gaskets shall be full faced with outside diameter equal to the flange outside diameter. Bolt isolation sleeves shall be full length. Units shall be of a shape to prevent metal-to-metal contact of dissimilar metallic piping elements.

a. Sleeve-type couplings shall be used for joining plain end pipe sections. The two couplings shall consist of one steel middle ring, two steel followers, two gaskets, and the necessary steel bolts and nuts to compress the gaskets.

b. Split-sleeve type couplings may be used in aboveground installations when approved in special situations and shall consist of gaskets and a housing in two or more sections with the necessary bolts and nuts.

2.3.7 Copper Tubing

Joints shall be compression-pattern flared and shall be made with fittings hereinafter specified.

2.4 VALVES

2.4.1 Gate Valves

Gate valves shall be designed for a working pressure of not less than 150 psi. Valve connections shall be as required for the piping in which they are installed. Valves shall have a clear waterway equal to the full nominal diameter of the valve, and shall be opened by turning counterclockwise. The operating nut or wheel shall have an arrow, cast in the metal, indicating the direction of opening.

a. Valves smaller than 3 inches shall be all bronze and shall conform to MSS SP-80, Type 1, Class 150.

b. Valves 3 inches and larger shall be iron body, bronze mounted, and shall conform to AWWA C500. Flanges shall not be buried. An approved pit shall be provided for all flanged connections.

c. Resilient-Seated Gate Valves: For valves 3 to 12 inches in size, resilient-seated gate valves shall conform to AWWA C509.

2.4.2 Indicator Post for Valves

Each valve shown on the drawings with the designation "P.I.V." shall be equipped with indicator post conforming to the requirements of NFPA 24. Operation shall be by a wrench which will be attached to each post.

2.5 VALVE BOXES

Valve boxes shall be cast iron or concrete, except that concrete boxes may be installed only in locations not subjected to vehicular traffic. Cast-iron boxes shall be extension type with slide-type adjustment and with flared base. The minimum thickness of metal shall be 3/16 inch. Concrete boxes shall be the standard product of a manufacturer of precast concrete equipment. The word "WATER" shall be cast in the cover. The box length shall adapt, without full extension, to the depth of cover required over the pipe at the valve location.

2.6 MISCELLANEOUS ITEMS

2.6.1 Service Clamps

Service clamps shall have a pressure rating not less than that of the pipe to be connected and shall be either the single or double flattened strap type. Clamps shall have a galvanized malleable-iron body with cadmium plated straps and nuts. Clamps shall have a rubber gasket cemented to the body.

2.6.2 Corporation Stops

Corporation stops shall have standard corporation stop thread conforming to AWWA C800 on the inlet end, with flanged joints, compression pattern flared tube couplings, or wiped joints for connections to goosenecks.

2.6.3 Goosenecks

Copper tubing for gooseneck connections shall conform to the applicable requirements of ASTM B 88, Type K, annealed. Length of cable requirement connections shall be in accordance with standard practice.

2.6.4 Service Stops

Service stops shall be water-works inverted-ground-key type, oval or round flow way, tee handle, without drain. Pipe connections shall be suitable for the type of service pipe used. All parts shall be of bronze with female

iron-pipe-size connections or compression-pattern flared tube couplings, and shall be designed for a hydrostatic test pressure not less than 200 psi.

2.6.5 Tapping Sleeves

Tapping sleeves of the sizes indicated for connection to existing main shall be the cast gray, ductile, or malleable-iron, split-sleeve type with flanged or grooved outlet, and with bolts, follower rings and gaskets on each end of the sleeve. Construction shall be suitable for a maximum working pressure of 150 psi. Bolts shall have square heads and hexagonal nuts. Longitudinal gaskets and mechanical joints with gaskets shall be as recommended by the manufacturer of the sleeve. When using grooved mechanical tee, it shall consist of an upper housing with full locating collar for rigid positioning which engages a machine-cut hole in pipe, encasing an elastomeric gasket which conforms to the pipe outside diameter around the hole and a lower housing with positioning lugs, secured together during assembly by nuts and bolts as specified, pretorqued to 50 foot-pound.

2.6.6 Service Boxes

Service boxes shall be cast iron or concrete and shall be extension service boxes of the length required for the depth of the line, with either screw or slide-type adjustment. The boxes shall have housings of sufficient size to completely cover the service stop or valve and shall be complete with identifying covers.

2.6.7 Disinfection

Chlorinating materials shall conform to the following:

Chlorine, Liquid: AWWA B301.

Hypochlorite, Calcium and Sodium: AWWA B300.

2.6.8 Meters

Meters shall be of the displacement type conforming to AWWA C700 or turbine type conforming to AWWA C701. Registers may be round or straight reading type. Connection to the water line shall be as required for the particular installation. All meters used for the same system shall be of one type and manufacturer.

2.6.9 Meter Boxes

Meter boxes shall be of cast iron or concrete of sufficient size to completely enclose the meter and shut-off valve or service stop. Box height shall extend from invert of the meter to final grade at the meter location. Cover shall be cast iron with the word "WATER" cast in it.

PART 3 - EXECUTION

3.1 INSTALLATION

3.1.1 Cutting of Pipe

Cutting of pipe shall be done in a neat and workmanlike manner without damage to the pipe. Unless otherwise recommended by the manufacturer and authorized by the Contracting Officer, cutting shall be done with an approved type mechanical cutter. Wheel cutter shall be used when practicable. Copper tubing shall be cut square and all burrs shall be removed. Squeeze type mechanical cutters shall not be used for ductile iron.

3.1.2 Adjacent Facilities

3.1.2.1 Sewer Lines

Where the location of the water pipe is not clearly defined in dimensions on the drawings, the water pipe shall not be laid closer horizontally than 10 feet from a sewer except where the bottom of the water pipe will be at least 12 inches above the top of the sewer pipe, in which case the water pipe shall not be laid closer horizontally than 6 feet from the sewer. Where water lines cross under gravity-flow sewer lines, the sewer pipe for a distance of at least 10 feet each side of the crossing shall be fully encased in concrete or shall be made of pressure pipe with no joint located within 3 feet horizontally of the crossing. Water lines shall in all cases cross above sewage force mains or inverted siphons and shall be not less than 2 feet above the sewer main. Joints in the sewer main, closer horizontally than 3 feet to the crossing, shall be encased in concrete.

3.1.2.2 Water Lines

Water lines shall not be laid in the same trench with sewer lines, gas lines, fuel lines, or electric wiring.

3.1.2.3 Copper Tubing

Copper tubing shall not be installed in the same trench with ferrous piping materials.

3.1.2.4 Nonferrous Metallic Pipe

Where nonferrous metallic pipe, e.g. copper tubing, crosses any ferrous piping material, a minimum vertical separation of 12 inches shall be maintained between pipes.

3.1.2.5 Casing Pipe

Water pipe shall be encased in a sleeve of rigid conduit for the lengths shown. Where sleeves are required the pipe sleeve shall be reinforced concrete in accordance with ASTM C 76, Class I. A minimum clearance of at least 2 inches between the inner wall of the sleeve and the maximum outside diameter of the sleeved pipe and joints shall be provided. Sand bedding or

suitable pipe support shall be provided for the water pipe through the sleeve. Sleeves of ferrous material shall be provided with corrosion protection as required in Section 16640 - CATHODIC PROTECTION SYSTEM (SACRIFICIAL ANODE).

3.1.2.6 Structures

Where water pipe is required to be installed within 3 feet of existing structures, the water pipe shall be sleeved as required in Paragraph "Casing Pipe". The Contractor shall take proper precautions during installation of the water pipe and sleeve to ensure that there will be no damage to the structures and no settlement or movement of foundations or footings.

3.1.3 Joint Deflection

3.1.3.1 Flexible Plastic Pipe

Maximum offset in alignment between adjacent pipe joints shall be as recommended by the manufacturer and approved by the Contracting Officer, but in no case shall it exceed 5 degrees.

3.1.3.2 Ductile-Iron Pipe

The maximum allowable deflection shall be as given in AWWA C600. If the alignment requires deflection in excess of the above limitations, special bends or a sufficient number of shorter lengths of pipe shall be furnished to provide angular deflections within the limit set forth.

3.1.4 Placing and Laying

Pipe and accessories shall be carefully lowered into the trench by means of derrick, ropes, belt slings, or other authorized equipment. Under no circumstances shall any of the water-line materials be dropped or dumped into the trench. Care shall be taken to avoid abrasion of the pipe coating. Except where necessary in making connections with other lines or as authorized by the Contracting Officer, pipe shall be laid with the bells facing in the direction of laying. The full length of each section of pipe shall rest solidly upon the pipe bed, with recesses excavated to accommodate bells, couplings, and joints. Pipe that has the grade or joint disturbed after laying shall be taken up and relaid. Pipe shall not be laid in water or when trench conditions are unsuitable for the work. Water shall be kept out of the trench until joints are complete. When work is not in progress, open ends of pipe, fittings, and valves shall be securely closed so that no trench water, earth, or other substance will enter the pipes or fittings. Where any part of the coating or lining is damaged, the repair shall be made by the Contractor at his expense in a satisfactory manner. Pipe ends left for future connections shall be valved, plugged, or capped, and anchored, as shown.

3.1.4.1 Plastic Pipe Installation

RTRP shall be installed in accordance with ASTM D 3839. RPMP shall be installed in accordance with the recommendations of the manufacturer. PE Pipe shall be installed in accordance with ASTM D 2774. PVC pipe shall be installed in accordance with AWWA M23.

3.1.4.2 Connections

Where connections are made between new work and existing mains, the connections shall be made by using specials and fittings to suit the actual conditions. When made under pressure, these connections shall be installed using standard methods as approved by the Contracting Officer. Connections to existing asbestos-cement pipe shall be made in accordance with ACPPA-01.

3.1.4.3 Penetrations

Pipe passing through walls of valve pits and structures shall be provided with ductile-iron or Schedule 40 steel wall sleeves. Annular space between walls and sleeves shall be filled with rich cement mortar. Annular space between pipe and sleeves shall be filled with mastic.

3.1.4.4 Flanged Pipe

Flanged pipe shall only be installed above ground or with the flanges in valve pits.

3.1.5 Jointing

3.1.5.1 Polyethylene (PE) Pipe

Jointing shall comply with ASTM D 2657, Technique I-Socket Fusion or Technique II-Butt Fusion.

3.1.5.2 Polyvinyl Chloride (PVC) Plastic Pipe

a. Pipe less than 4 inch diameter: Threaded joints shall be made by wrapping the male threads with approved thread tape or applying an approved lubricant, then threading the joining members together. The joint shall be tightened using strap wrenches to prevent damage to the pipe and/or fitting. To avoid excessive torque, joints shall be tightened no more than one thread past hand-tight. Preformed rubber-ring gaskets for elastomeric-gasket joints shall be made in accordance with requirements of ASTM F 477 and as required herein. All pipe ends for push-on joints shall be beveled to facilitate assembly and marked to indicate when the pipe is fully seated. The gasket shall be prelubricated to prevent displacement. The gasket and ring groove in the bell or coupling shall match. The manufacturer of the pipe or fitting shall supply the elastomeric gasket. Couplings shall be provided with stops or centering rings to assure that the coupling is centered on the joint. Solvent cement joints shall use sockets conforming to the requirements of ASTM D 2467. The solvent cement used shall meet the requirements of ASTM D 2564; the joint assembly shall be made in accordance with ASTM D 2855 and the manufacturer's specific recommendations.

b. Pipe 4 inch through 12 inch diameter: Joints shall be elastomeric-gasket as specified in AWWA C900. Jointing procedure shall be as specified for pipe less than 4 inch diameter with configuration using elastomeric ring gasket.

3.1.5.3 RTRP I, RTRP II and RPMP Pipe

a. RTRP I: Assembly of the pipe shall be done in strict conformance with the manufacturer's written instruction and installation procedures. Field joints shall be prepared as specified by the pipe manufacturer. Several pipe joints having interference-fit type couplings may be field bonded and cured simultaneously. However, the pipe shall not be moved nor shall additional joints be made until the previously laid joints are completely cured. Joints not having interference-fit type coupling shall be fitted with a clamp which shall hold the joint rigidly in place until the joint cement has completely cured. The clamps shall have a protective material on the inner surface to prevent damage to the plastic pipe when the clamp is tightened in place. The pipe manufacturer shall provide a device or method to determine when the joint is pulled against the pipe stop. Additionally, the pipe manufacturer shall furnish a gauge to measure the diameter of the spigot ends to ensure the diameter conforms to the tolerances specified by the manufacturer. All pipe ends shall be gauged. Factory certified tests shall have been satisfactorily performed to verify that short-term rupture strength is 1,500 psi or greater when carried out in accordance with ASTM D 1599. All field bonded epoxy-cemented joints, regardless of ambient temperature, shall be cured with a self-regulating thermostatically temperature controlled electrical heating blanket for the time and temperature recommended by the manufacturer for the applicable size and type of joint, or by an alternate heating method recommended by the manufacturer and approved by the Contracting Officer. The joint sections shall not be moved during heating or until the joint has cooled to ambient temperature.

b. RTRP II: A reinforced overlay joint shall be used to join sections together through a placement of layers of reinforcement fiberglass roving, mat, tape or fabric thoroughly saturated with compatible catalyzed resin.

c. Fittings and Specials for RTRP and RPMP Pipe: Metal to RTRP and RPMP pipe connections shall be made by bolting steel flanges to RTRP and RPMP pipe flanges. Cast-iron fitting with gasket bell or mechanical joint may be used with RTRP if pipe has cast iron outside diameter. Steel flanges shall be flat-faced type. Where raised-face steel flanges are used, spacer rings shall be used to provide a flat-face seat for RTRP and RPMP pipe flanges. A full-face Buna "N" gasket 1/8 inch thick with a shore hardness of 50-60 shall be used between all flanged connections. The RTRP and RPMP pipe flange shall have raised sealing rings. Flat washers shall be used under all nuts and bolts on RTRP and RPMP pipe flanges. Bolts and nuts shall be of noncorrosive steel and torqued to not more than 100 foot pounds. Flanges shall not be buried. A concrete pit shall be provided for all flanged connections.

3.1.5.4 Ductile-Iron Pipe

Mechanical and push-on type joints shall be installed in accordance with AWWA C600 for buried lines or AWWA C606 for grooved and shouldered pipe above ground or in pits.

3.1.5.5 Copper Tubing

Joints shall be made with flared fittings. The flared end tube shall be pulled tightly against the tapered part of the fitting by a nut which is part of the fitting, so there is metal-to-metal contact.

3.1.5.6 Bonded Joints

Bonded joints shall be installed in accordance with details specified for joints in paragraph JOINTS.

3.1.5.7 Isolation Joints and Dielectric Fittings

Isolation joints and dielectric fittings shall be installed in accordance with details specified in paragraph JOINTS. Dielectric unions shall be encapsulated in a field-poured coal-tar covering, with at least 1/8 inch thickness of coal tar over all fitting surfaces.

3.1.5.8 Connections

Connections between different types of pipe and accessories shall be made with transition fittings approved by the Contracting Officer.

3.1.6 Service Lines

Service lines shall include the pipeline connecting building piping to water distribution lines to the connections with the building service at a point approximately 5 feet outside the building where such building service exists. Where building services are not installed, the Contractor shall terminate the service lines approximately 5 feet from the site of the proposed building at a point designated by the Contracting Officer. Such service lines shall be closed with plugs or caps. All service stops and valves shall be provided with service boxes. Service lines shall be constructed in accordance with the following requirements:

3.1.6.1 Service Lines 2 Inches and Smaller

Service lines 2 inches and smaller shall be connected to the main by a directly-tapped corporation stop or by a service clamp. A corporation stop and a copper gooseneck shall be provided with either type of connection. Maximum sizes for directly-tapped corporation stops and for outlets with service clamps shall be as in TABLE I. Where 2 or more gooseneck connections to the main are required for an individual service, such connections shall be made with standard branch connections. The total clear area of the branches shall be at least equal to the clear area of the service which they are to supply.

TABLE I. SIZE OF CORPORATION STOPS AND OUTLETS

Pipe Size Inches	Corporation Stops, Inches For Ductile-Iron Pipe	Outlets w/Service Clamps, Inches Single & Double Strap
3	--	1
4	1	1
6	1-1/4	1-1/2
8	1-1/2	2
10	1-1/2	2
12 & larger	2	2

3.1.6.2 Service Lines 1-1/2 Inch and Smaller

Service lines 1-1/2 inches and smaller shall have a service stop.

3.1.6.3 Service Lines 2 Inches in Size

Service lines 2 inches in size shall have a gate valve.

3.1.6.4 Service Lines Larger than 2 Inches

Service lines larger than 2 inches shall be connected to the main by a tapped saddle, tapping sleeve and valve, service clamp or reducing tee, depending on the main diameter and the service line diameter, and shall have a gate valve. Lines 3 inches and larger may use rubber-seated butterfly valves as specified above, or gate valves.

3.1.6.5 Service Lines for Sprinkler Supplies

Water service lines used to supply building sprinkler systems for fire protection shall be connected to the water distribution main in accordance with NFPA 24.

3.1.7 Meters, Valves and Valve Boxes

3.1.7.1 Meters

Meters and meter boxes shall be installed at the locations shown on the drawings. The meters shall be centered in the boxes to allow for reading and ease of removal or maintenance.

3.1.7.2 Valves

After delivery, valves, including those in hydrants, shall be drained to prevent freezing and shall have the interiors cleaned of all foreign matter before installation. Stuffing boxes shall be tightened and hydrants and valves shall be fully opened and fully closed to ensure that all parts are in working condition. Check, pressure reducing, vacuum, and air relief valves shall be installed in valve pits. Valves and valve boxes shall be installed where shown or specified, and shall be set plumb. Valve boxes shall be centered on the valves. Boxes shall be installed over each outside gate valve unless otherwise shown. Where feasible, valves shall be located outside the area of roads and streets. Earth fill shall be carefully tamped around each valve box or pit to a distance of 4 feet on all sides of the box, or the undisturbed trench face if less than 4 feet.

3.1.7.3 Service Boxes

Where water lines are located below paved streets having curbs, the boxes shall be installed directly back of the curbs. Where no curbing exists, service boxes shall be installed in accessible locations, beyond the limits of street surfacing, walks and driveways.

3.1.8 Tapped Tees and Crosses

Tapped tees and crosses for future connections shall be installed where shown.

3.1.9 Thrust Restraint

Plugs, caps, tees and bends deflecting 11-1/4 degrees or more, either vertically or horizontally, on waterlines 4 inches in diameter or larger shall be provided with thrust restraints. Valves shall be securely anchored or shall be provided with thrust restraints to prevent movement. Thrust restraints shall be either thrust blocks or, for ductile-iron pipes, restrained joints.

3.1.9.1 Thrust Blocks

Thrust blocking shall be concrete of a mix not leaner than: 1 cement, 2-1/2 sand, 5 gravel; and having a compressive strength of not less than 2,000 psi after 28 days. Blocking shall be placed between solid ground and the hydrant or fitting to be anchored. Unless otherwise indicated or directed, the base and thrust bearing sides of thrust blocks shall be poured directly against undisturbed earth. The sides of thrust blocks not subject to thrust may be poured against forms. The area of bearing shall be as shown or as directed. Blocking shall be placed so that the fitting joints will be accessible for repair. Steel rods and clamps, protected by galvanizing or by coating with bituminous paint, shall be used to anchor vertical down bends into gravity thrust blocks.

3.1.9.2 Restrained Joints

For ductile-iron pipe, restrained joints shall be designed by the Contractor or the pipe manufacturer in accordance with DIPRA-01.

3.2 HYDROSTATIC TESTS

Where any section of a water line is provided with concrete thrust blocking for fitting or hydrants, the hydrostatic tests shall not be made until at least 5 days after installation of the concrete thrust blocking, unless otherwise approved.

3.2.1 Pressure Test

After the pipe is laid, the joints completed, and the trench partially backfilled leaving the joints exposed for examination, the newly laid piping or any valved section of piping shall, unless otherwise specified, be subjected for 1 hour to a hydrostatic pressure test of 200 psi. Each valve shall be opened and closed several times during the test. Exposed pipe, joints, fittings, hydrants, and valves shall be carefully examined during the partially open trench test. Joints showing visible leakage shall be replaced or remade as necessary. Cracked or defective pipe, joints, fittings, hydrants and valves, discovered in consequence of this pressure test shall be removed and replaced with sound material, and the test shall be repeated until the test results are satisfactory. The requirement for the joints to remain exposed for the hydrostatic tests may be waived by the Contracting Officer when one or more of the following conditions is encountered:

a. Wet or unstable soil conditions in the trench.

b. Compliance would require maintaining barricades and walkways around and across an open trench in a heavily used area that would require continuous surveillance to assure safe conditions.

c. Maintaining the trench in an open condition would delay completion of the contract.

The Contractor may request a waiver, setting forth in writing the reasons for the request and stating the alternative procedure proposed to comply with the required hydrostatic tests. Backfill placed prior to the tests shall be placed in accordance with the requirements of Section 02222 - EXCAVATION, TRENCHING, AND BACKFILLING FOR UTILITIES SYSTEMS.

3.2.2 Leakage Test

Leakage test shall be conducted after the pressure tests have been satisfactorily completed. The duration of each leakage test shall be at least 2 hours, and during the test the water line shall be subjected to not less than 200 psi pressure. Water supply lines designated on the drawings shall be subjected to a pressure equal to 200 psi. Leakage is defined as the quantity of water to be supplied into the newly laid pipe, or any valved or approved section thereof, necessary to maintain pressure within 5 psi of the specified leakage test pressure after the pipe has been filled with water and the air expelled. No piping installation will be accepted if leakage exceeds the allowable leakage which is determined by the following formula:

L = 0.0001351ND(P raised to 1/2 power)

L = Allowable leakage in gallons per hour
N = Number of joints in the length of pipeline tested
D = Nominal diameter of the pipe in inches
P = Average test pressure during the leakage test, in psi gauge

Should any test of pipe disclose leakage greater than that calculated by the above formula, the defective joints shall be located and repaired until the leakage is within the specified allowance, without additional cost to the Government.

3.2.3 Time for Making Test

Except for joint material setting or where concrete thrust blocks necessitate a 5-day delay, pipelines jointed with rubber gaskets, mechanical or push-on joints, or couplings may be subjected to hydrostatic pressure, inspected, and tested for leakage at any time after partial completion of backfill. Cement-mortar lined pipe may be filled with water as recommended by the manufacturer before being subjected to the pressure test and subsequent leakage test.

3.2.4 Concurrent Hydrostatic Tests

The Contractor may elect to conduct the hydrostatic tests using either or both of the following procedures. Regardless of the sequence of tests employed, the results of pressure tests, leakage tests, and disinfection shall be satisfactory as specified. All replacement, repair or retesting required shall be accomplished by the Contractor at no additional cost to the Government.

a. Pressure test and leakage test may be conducted concurrently.

b. Hydrostatic tests and disinfection may be conducted concurrently, using the water treated for disinfection to accomplish the hydrostatic tests. If water is lost when treated for disinfection and air is admitted to the unit being tested, or if any repair procedure results in contamination of the unit, disinfection shall be reaccomplished.

3.3 DISINFECTION

3.3.1 Bacteriological Disinfection

Before acceptance of potable water operation, each unit of completed waterline shall be disinfected as specified herein. After pressure tests have been made, the unit to be disinfected shall be thoroughly flushed with water until all entrained dirt and mud have been removed before introducing the chlorinating material. The chlorinating material shall be either liquid chlorine, calcium hypochlorite, or sodium hypochlorite, conforming to paragraph MISCELLANEOUS ITEMS. The chlorinating material shall provide a dosage of not less than 50 ppm and shall be introduced into the water lines in an approved manner. Polyvinyl Chloride (PVC) pipe lines shall be chlorinated using only the above specified chlorinating material in solution. In no case will the agent be introduced into the line in a dry solid state. The treated water shall be retained in the pipe long enough to destroy all non-spore-forming bacteria. Except where a shorter period is approved, the

retention time shall be at least 24 hours and shall produce not less than 25 ppm of free chlorine residual throughout the line at the end of the retention period. All valves on the lines being disinfected shall be opened and closed several times during the contact period. The line shall then be flushed with clean water until the residual chlorine is reduced to less than 1.0 ppm. During the flushing period, each fire hydrant on the line shall be opened and closed several times. From several points in the unit, personnel from the Contractor's commercial laboratory shall take at least 3 water samples from different points, approved by the Contracting Officer, in proper sterilized containers and perform a bacterial examination in accordance with state approved methods. The commercial laboratory must be certified by the state's approving authority for examination of potable water. The disinfection shall be repeated until tests indicate the absence of pollution for at least 2 full days. The unit will not be accepted until satisfactory bacteriological results have been obtained.

3.3.2 Lead Residual

Following the bacteriological disinfection and testing, the system shall be flushed with a sufficient velocity of water and sufficient tests performed at each hot- and cold-water discharge point until no more than 15 ppb lead residuals remain in the system. All tests and samples shall be performed in accordance with state and, if applicable, Federal regulations. Samples for testing are to be collected after a 6-hour continuous period of no flushing, and will be considered first draw samples. The commercial laboratory must be certified by the state's approving authority for examination of potable water. Lead residual test results are to be submitted to the Contracting Officer. The system will not be accepted until satisfactory bacteriological results and lead residual test results have been obtained. All flushing and testing for lead residuals, including all costs, are the responsibility of the Contractor.

3.4 CLEANUP

Upon completion of the installation of water lines, and appurtenances, all debris and surplus materials resulting from the work shall be removed.

- - o 0 o - -

SECTION 02730A

SANITARY SEWERS

PART 1 - GENERAL

1.1 REFERENCES

The publications listed below form a part of this specification to the extent referenced. The publications are referred to in the text by basic designation only.

AMERICAN SOCIETY FOR TESTING AND MATERIALS (ASTM)

ASTM A 74	(1994) Cast Iron Soil Pipe and Fittings
ASTM A 123	(1989a) Zinc (Hot-Dip Galvanized) Coatings on Iron and Steel Products
ASTM C 14	(1994) Concrete Sewer, Storm Drain, and Culvert Pipe
ASTM C 33	(1993) Concrete Aggregates
ASTM C 76	(1994) Reinforced Concrete Culvert, Storm Drain, and Sewer Pipe
ASTM C 94	(1994) Ready-Mixed Concrete
ASTM C 150	(1994) Portland Cement
ASTM C 260	(1994) Air-Entraining Admixtures for Concrete
ASTM C 270	(1994) Mortar for Unit Masonry
ASTM C 425	(1991) Compression Joints for Vitrified Clay Pipe and Fittings
ASTM C 443	(1994) Joints for Circular Concrete Sewer and Culvert Pipe, Using Rubber Gaskets
ASTM C 478	(1994) Precast Reinforced Concrete Manhole Sections
ASTM C 564	(1993) Rubber Gaskets for Cast Iron Soil Pipe and Fittings
ASTM C 700	(1991) Vitrified Clay Pipe, Extra Strength, Standard Strength, and Perforated
ASTM C 972	(1982; R 1990) Test Method for Compression-Recovery of Tape Sealant

ASTM D 412	(1992) Vulcanized Rubber and Thermoplastic Rubbers and Thermoplastic Elastomers - Tension
ASTM D 624	(1991) Tear Strength of Conventional Vulcanized Rubber and Thermoplastic Elastomers
ASTM D 2680	(1993) Acrylonitrile-Butadiene-Styrene (ABS) and Poly(Vinyl Chloride) (PVC) Composite Sewer Piping
ASTM D 2751	(1993) Acrylonitrile-Butadiene-Styrene (ABS) Sewer Pipe and Fittings
ASTM D 2996	(1988) Filament-Wound "Fiberglass" (Glass-Fiber-Reinforced Thermosetting-Resin) Pipe
ASTM D 2997	(1990) Centrifugally Cast "Fiberglass" (Glass-Fiber-Reinforced-Thermosetting-Resin) Pipe
ASTM D 3034	(1994) Type PSM Poly(Vinyl Chloride) (PVC) Sewer Pipe and Fittings
ASTM D 3212	(1992) Joints for Drain and Sewer Plastic Pipes Using Flexible Elastomeric Seals
ASTM D 3262	(1993) "Fiberglass" (Glass-Fiber-Reinforced Thermosetting-Resin) Sewer Pipe
ASTM D 3753	(1981; R 1991) Glass-Fiber-Reinforced Polyester Manholes
ASTM D 3840	(1988) "Fiberglass" (Glass-Fiber-Reinforced Thermosetting-Resin) Pipe Fittings for Nonpressure Applications
ASTM F 402	(1993) Safe Handling of Solvent Cements, Primers, and Cleaners Used for Joining Thermoplastic Pipe and Fittings
ASTM F 477	(1993) Elastomeric Seals (Gaskets) for Joining Plastic Pipe
ASTM F 714	(1994) Polyethylene (PE) Plastic pipe (SDR-PR) Based on Outside Diameter
ASTM F 794	(1993a) Poly(Vinyl Chloride) (PVC) Profile Gravity Sewer Pipe and Fittings Based on Controlled Inside Diameter
ASTM F 894	(1994a) Polyethylene (PE) Large Diameter Profile Wall Sewer and Drain Pipe
ASTM F 949	(1993a) Poly(Vinyl Chloride) (PVC) Corrugated Sewer Pipe with a Smooth Interior and Fittings

AMERICAN WATER WORKS ASSOCIATION (AWWA)

AWWA C105	(1988) Polyethylene Encasement for Ductile-Iron Piping for Water and Other Liquids
AWWA C110	(1993) Ductile-Iron and Gray-Iron Fittings, 3 In. Through 48 In., for Water and Other Liquids
AWWA C111	(1990) Rubber-Gasket Joints for Ductile-Iron Pressure Pipe and Fittings
AWWA C115	(1988) Flanged Ductile-Iron Pipe with Threaded Flanges
AWWA C151	(1991) Ductile-Iron Pipe, Centrifugally Cast, for Water or Other Liquids

FEDERAL SPECIFICATIONS (FS)

FS QQ-C-40	(Basic; Am 2; Notice 1) Caulking: Lead Wool and Lead Pig
FS RR-F-621	(Rev E) Frames, Covers, Gratings, Steps, Sump and Catch Basin, Manhole

UNI-BELL PVC PIPE ASSOCIATION (UBPPA)

UBPPA UNI-B-9	(1990) Recommended Performance Specification for Polyvinyl Chloride (PVC) Profile Wall Gravity Sewer Pipe and Fittings Based on Controlled Inside Diameter (Nominal Pipe Sizes 4-48 inch)

1.2 GENERAL REQUIREMENTS

The construction required herein shall include appurtenant structures and building sewers to points of connection with the building drains 5 feet outside the building to which the sewer system is to be connected. Excavation and backfilling is specified in Section 02222 - EXCAVATION, TRENCHING, AND BACKFILLING FOR UTILITIES SYSTEMS. Backfilling shall be accomplished after inspection by the Contracting Officer. Before, during, and after installation, plastic pipe and fittings shall be protected from any environment that would result in damage or deterioration to the material. Solvents, solvent compounds, lubricants, elastomeric gaskets, and any similar materials required to install the plastic pipe shall be stored in accordance with the manufacturer's recommendation.

PART 2 - PRODUCTS

2.1 PIPE

Pipe shall conform to the respective specifications and other requirements specified below.

2.1.1 Concrete Pipe

Concrete pipe 24 inches or less in diameter, unless otherwise shown or specified, shall be nonreinforced and conform to ASTM C 14, Class 1. Pipe less than 36 inches in diameter shall be bell and spigot type.

2.1.2 Plastic Pipe

Acrylonitrile-butadiene-styrene (ABS) and polyvinyl chloride (PVC) composite sewer piping shall conform to ASTM D 2680. Size 8 inch through 15 inch diameter.

2.1.2.1 ABS Pipe

ASTM D 2751.

2.1.2.2 PVC Pipe

ASTM D 3034, Type PSM with a maximum SDR of 35, Size 15 inches or less in diameter. ASTM F 949 for corrugated sewer pipes with a smooth interior. UBPPA UNI-B-9 and ASTM F 794, Series 46, for ribbed sewer pipe with smooth interior, size 8 inch through 48 inch diameters.

2.1.2.3 High Density Polyethylene Pipe

ASTM F 714, size 4 inch through 48 inch.

2.1.3 Reinforced Plastic Mortar Pipe (RPMP)

ASTM D 3262.

2.1.4 Reinforced Thermosetting Resin Pipe (RTRP)

ASTM D 3262.

2.1.4.1 Filament Wound RTRP-I

RTRP-I shall conform to ASTM D 2996, except pipe shall have an outside diameter equal to cast iron outside diameter or standard weight steel pipe. The pipe shall be suitable for a normal working pressure of 150 psi at 73 degrees F. The inner surface of the pipe shall have a smooth uniform continuous resin-rich surface liner conforming to ASTM D 2996.

2.1.4.2 Centrifugally Cast RTRP-II

RTRP-II shall conform to ASTM D 2997. Pipe shall have an outside diameter equal to standard weight steel pipe.

2.1.5 Ductile Iron Pipe

Pipe shall conform to AWWA C151 unless otherwise shown or specified.

2.1.6 Clay Pipe

ASTM C 700 Extra strength.

2.2 FITTINGS

Fittings shall be compatible with the pipe supplied and shall have a strength not less than that of the pipe. Fittings shall conform to the respective specifications and other requirements specified below.

2.2.1 Concrete Pipe

ASTM C 14 for pipe 24 inches or less in diameter.

2.2.2 Plastic Pipe

ABS and PVC composite sewer pipe fittings shall conform to ASTM D 2680.

2.2.2.1 ABS Pipe

ASTM D 2751.

2.2.2.2 PVC Pipe

ASTM D 3034 for type PSM pipe. ASTM F 949 for corrugated sewer pipe with a smooth interior and fittings of 4, 6, 8, and 10 inches in diameter. UBPPA UNI-B-9 and ASTM F 794, Series 46, for ribbed sewer pipe with smooth interior.

2.2.2.3 High Density Polyethylene Pipe

ASTM F 894.

2.2.3 RPMP

ASTM D 3840.

2.2.4 RTRP

ASTM D 3262.

2.2.5 Ductile Iron Pipe

Mechanical fittings shall conform to AWWA C110, rated for 150 psi. Push-on fittings shall conform to AWWA C110 and AWWA C111, rated for 150 psi.

2.2.6 Clay Pipe

ASTM C 700 Extra strength.

2.3 JOINTS

Joints installation shall comply with the manufacturer's instructions.

2.3.1 Concrete Pipe

Joints and gaskets shall conform to ASTM C 443.

2.3.2 Plastic Pipe

2.3.2.1 ABS Pipe

ASTM D 2751, solvent weld or bell and spigot O-ring joint, size 12 inches or less in diameter, dimensions and tolerances in accordance with Table 2 therein.

2.3.2.2 PVC Pipe

Flexible elastomeric gasket joint conforming to ASTM D 3212 for Type PSM pipe.

2.3.2.3 High Density Polyethylene Pipe

Rubber gasket joints shall conform to ASTM C 443.

2.3.3 RPMP

Joints shall be bell and spigot type utilizing an elastomeric gasket in accordance with ASTM F 477.

2.3.4 RTRP

Joints shall be bell and spigot type utilizing an elastomeric gasket in accordance with ASTM F 477.

2.3.5 Ductile Iron Pipe

Push-on joints shall conform to AWWA C111. Mechanical joints shall conform to AWWA C111 as modified by AWWA C151. Flanged joints shall conform to AWWA C115.

2.3.6 Clay Pipe

Compression joints shall conform to ASTM C 425.

2.4 BRANCH CONNECTIONS

Branch connections shall be made by use of regular fittings or solvent cemented saddles as approved. Saddles for ABS and PVC composite pipe shall conform to Figure 2 of ASTM D 2680; saddles for ABS pipe shall comply with Table 3 of ASTM D 2751; and saddles for PVC pipe shall conform to Table 4 of ASTM D 3034.

2.5 FRAMES AND COVERS

Frames and covers shall be cast iron, ductile iron or reinforced concrete. Cast iron frames and covers shall be as indicated or shall conform to FS RR-F-621, type as suitable for the application, circular, without vent holes. The frames and covers shall have a combined weight of not less than 400

pounds. Reinforced concrete frames and covers shall be as indicated. The word "Sewer" shall be stamped or cast into covers so that it is plainly visible.

2.6 STEEL LADDER

A steel ladder shall be provided where the depth of a manhole exceeds 12 feet. The ladder shall not be less than 16 inches in width, with 3/4 inch diameter rungs spaced 12 inches apart. The two stringers shall be a minimum 3/8 inch thick and 2 inches wide. Ladders and inserts shall be galvanized after fabrication in conformance with ASTM A 123.

2.7 CEMENT MORTAR

Cement mortar shall conform to ASTM C 270, Type M with Type II cement.

2.7.1 Portland Cement

Portland cement shall conform to ASTM C 150, Type II for concrete used in concrete pipe, concrete pipe fittings, and manholes and type optional with the Contractor for cement used in concrete cradle, concrete encasement, and thrust blocking.

2.7.2 Portland Cement Concrete

Portland cement concrete shall conform to ASTM C 94, compressive strength of 4000 psi at 28 days, except for concrete cradle and encasement or concrete blocks for manholes. Concrete used for cradle and encasement shall have a compressive strength of 2500 psi minimum at 28 days. Concrete in place shall be protected from freezing and moisture loss for 7 days.

2.8 STRUCTURES

2.8.1 Precast Reinforced Concrete Manhole Sections

Precast reinforced concrete manhole sections shall conform to ASTM C 478, except that portland cement shall be as specified herein. Joints shall be cement mortar, an approved mastic, rubber gaskets, a combination of these types; or the use of external preformed rubber joint seals and extruded rolls of rubber with mastic adhesive on one side.

2.8.2 Glass-Fiber Reinforced Polyester Manholes

Glass-fiber-reinforced polyester manholes shall conform to ASTM D 3753.

PART 3 - EXECUTION

3.1 INSTALLATION

3.1.1 Adjacent Facilities

3.1.1.1 Water Lines

Where the location of the sewer is not clearly defined by dimensions on the drawings, the sewer shall not be closer horizontally than 10 feet to a water-supply main or service line, except that where the bottom of the water pipe will be at least 12 inches above the top of the sewer pipe, the horizontal spacing may be a minimum of 6 feet. Where gravity-flow sewers cross above water lines, the sewer pipe for a distance of 10 feet on each side of the crossing shall be fully encased in concrete or shall be acceptable pressure pipe with no joint closer horizontally than 3 feet to the crossing. The thickness of the concrete encasement including that at the pipe joints shall be not less than 4 inches.

3.1.1.2 Structures

Where sewer pipe is to be installed within 3 feet of an existing or proposed building or structural foundation, the sewer pipe shall be sleeved. A minimum clearance of at least 2 inches between the inner wall of the sleeve and the maximum outside diameter of the sleeved pipe and joints shall be provided. Sand bedding shall be provided for the water pipe through the sleeve. Sleeves of ferrous material shall be provided with the corrosion protection as required for the conditions encountered at the site of installation.as specified above. Care shall be exercised and proper precautions taken during installation of the sewer pipe and sleeve to assure that there will be no damage to such structures and no settlement or movement of foundations or footing.

3.1.2 Pipe Laying

a. Pipe shall be protected during handling against impact shocks and free fall.

b. Pipe laying shall proceed upgrade with the spigot ends of bell-and-spigot pipe and tongue ends of tongue-and-groove pipe pointing in the direction of the flow. Each pipe shall be laid accurately to the line and grade shown on the drawings. Pipe shall be laid and centered so that the sewer has a uniform invert. As the work progresses, the interior of the sewer shall be cleared of all superfluous materials.

c. Before making pipe joints all surfaces of the portions of the pipe to be joined shall be clean and dry. Lubricants, primers, and adhesives shall be used as recommended by the pipe manufacturer. The joints shall then be placed, fitted, joined, and adjusted to obtain the degree of water tightness required.

d. ABS composite pipe ends with exposed truss and filler material shall be coated with solvent weld material before making the joint to prevent water or air passage at the joint between the inner and outer wall of the pipe.

e. Installations of solvent weld joint pipe, using ABS or PVC pipe and fittings shall be in accordance with ASTM F 402. All required precautions shall be taken to assure adequate trench ventilation and protection for workers installing the pipe.

3.1.2.1 Caulked Joints

The packing material shall be well packed into the annular space to prevent the entrance of lead into the pipe. The remainder of the space shall be filled with molten lead that is hot enough to show a rapid change in color when stirred. Scum shall be removed before pouring. The lead shall be caulked to form a tight joint without overstraining the bell and shall have a minimum depth of 1 inch after caulking.

3.1.2.2 Trenches

Trenches shall be kept free of water and as dry as possible during bedding, laying, and jointing and for as long a period as required. When work is not in progress, open ends of pipe and fittings shall be satisfactorily closed so that no trench water or other material will enter the pipe or fittings.

3.1.2.3 Backfill

As soon as possible after the joint is made, sufficient backfill material shall be placed along the pipe to prevent pipe movement off line or grade. Plastic pipe shall be completely covered to prevent damage from ultraviolet light.

3.1.2.4 Width of Trench

If the maximum width of the trench at the top of the pipe, as specified in Section 02222 - EXCAVATION, TRENCHING, AND BACKFILLING FOR UTILITIES SYSTEMS, is exceeded for any reason other than by direction, the Contractor shall install at no additional cost to the Government such concrete cradling, pipe encasement, or other bedding required to support the added load of the backfill.

3.1.2.5 Joints

Joints between different pipe materials shall be made as specified, using approved jointing materials.

3.1.3 Leakage Tests

Lines shall be tested for leakage by appropriate methods. Visible leaks encountered shall be corrected regardless of leakage test results. Leakage as measured by either the infiltration test or exfiltration test shall not exceed 0.2 gallons per inch diameter per 100 feet of pipeline per hour. When leakage exceeds the maximum amount specified, satisfactory correction shall be made and retesting accomplished. Testing, correction, and retesting shall be made at no additional cost to the Government.

3.1.4 Deflection

Installed pipe showing deflections greater than 5 percent at the end of one year following acceptance shall be replaced at no cost to the Government.

3.2 CONCRETE CRADLE AND ENCASEMENT

The pipe shall be supported on a concrete cradle, or encased in concrete where indicated or directed.

3.3 WYE BRANCHES

Wye branches shall be installed where sewer connections are indicated or where directed. Cutting into piping for connections shall not be done except in special approved cases. The installation of wye branches in an existing sewer shall be made by a method which does not damage the integrity of the existing sewer.

3.4 MANHOLES

3.4.1 General

Manholes shall be constructed as indicated. The invert channels shall be smooth and semicircular in shape conforming to the inside of the adjacent sewer section. Changes in direction of flow shall be made with a smooth curve of as large a radius as the size of the manhole will permit. Changes in size and grade of the channels shall be made gradually and evenly. Pipe connections shall be made in accordance with the manufacturer's recommendation. The floor of the manhole outside the channels shall be smooth and shall slope toward the channels. Ladder shall be adequately anchored to the wall by means of steel inserts spaced not more than 6 feet apart vertically, and shall be installed to provide at least 6 inches of space between the wall and the rungs. The wall along the line of the ladder shall be vertical for its entire length.

3.4.2 Jointing, Plastering and Sealing

Mortar joints shall be completely filled and shall be smooth and free from surplus mortar on the inside of the manhole. Mortar and mastic joints between precast rings shall be full-bedded in jointing compound and shall be smoothed to a uniform surface on both the interior and exterior of the manhole. Installation of rubber gasket joints between precast rings shall be in accordance with the recommendations of the manufacturer. Precast rings may also be sealed by the use of extruded rolls of rubber with mastic adhesive on one side.

3.4.3 Frames and Covers

Unless otherwise indicated, tops of frames and covers shall be set flush with finished grade in paved areas or 2 inches higher than finished grade in unpaved areas. Frame and cover assemblies shall be sealed to manhole sections using external preformed rubber joint seals that meet the requirements of ASTM D 412 and ASTM D 624, or other methods specified in paragraph Jointing, Plastering and Sealing, unless otherwise specified.

3.4.4 External Preformed Rubber Joint Seals

External preformed rubber joint seals and extruded rolls of rubber with mastic adhesive shall meet the requirements of ASTM D 412 and ASTM C 972 to ensure

conformance with paragraph Leakage Tests. The seal shall be multi-section with neoprene rubber top section and all lower sections made of Ethylene Propylene Di Monomer (EPDM) rubber with a minimum thickness of 60 mils. Each unit shall consist of a top and a bottom section and shall have mastic on the bottom of the bottom section and mastic on the top and bottom of the top section. The mastic shall be non-hardening butyl rubber sealant and shall seal to the cone/top slab of the manhole/catch basin and over the lip of the casting. One unit shall seal a casting and up to six, 2 inch adjusting rings. The bottom section will be 12 inches in height. A 6 inch high top section will cover up to two, 2 inch adjusting rings. A 12 inch high bottom section will cover up to six, 2 inch adjusting rings. Extension sections shall cover up to two more adjusting rings. Each extension shall overlap the bottom section by 2 inches and shall be overlapped by the top section by 2 inches.

- - o 0 o - -

SECTION 02831

CHAIN LINK FENCE

PART 1 - GENERAL

1.1 REFERENCES

The publications listed below form a part of this specification to the extent referenced. The publications are referred to in the text by basic designation only.

AMERICAN SOCIETY FOR TESTING AND MATERIALS (ASTM)

ASTM A 121	(1992a) Zinc-Coated (Galvanized) Steel Barbed Wire
ASTM A 153	(1996) Zinc-Coated (Hot Dip) on Iron and Steel Hardware
ASTM A 176	(1994) Stainless and Heat-Resisting Chromium Steel Plate, Sheet, and Strip
ASTM A 392	(1996) Zinc-Coated Steel Chain-Link Fence Fabric
ASTM A 478	(1995a) Chromium-Nickel Stainless and Heat-Resisting Steel Weaving and Knitting Wire
ASTM A 491	(1996) Aluminum-Coated Steel Chain-Link Fence Fabric
ASTM A 585	(1992) Aluminum-Coated Steel Barbed Wire
ASTM A 666	(1994) Austenitic Stainless Steel Sheet, Strip, Plate, and Flat Bar
ASTM A 780	(1993a) Repair of Damaged and Uncoated Areas of Hot-Dipped Galvanized Coatings
ASTM A 824	(1992) Metallic-Coated Steel Marcelled Tension Wire for Use With Chain Link Fence
ASTM C 94	(1996) Ready-Mixed Concrete
ASTM D 4541	(1995) Pull-Off Strength of Coatings Using Portable Adhesion Testers
ASTM F 626	(1996) Fence Fittings
ASTM F 668	(1996) Poly(Vinyl Chloride) (PVC)-Coated Steel Chain-Link Fence Fabric

ASTM F 900	(1994) Industrial and Commercial Swing Gates
ASTM F 1043	(1995) Strength and Protective Coatings on Metal Industrial Chain-Link Fence Framework
ASTM F 1083	(1996) Specification for Pipe, Steel, Hot-Dipped Zinc-Coated (Galvanized) Welded, for Fence Structures
ASTM F 1184	(1994) Industrial and Commercial Horizontal Slide Gates
ASTM F 1267	(1991) Metal, Expanded, Steel
ASTM G 23	(1996) Operating Light-Exposure Apparatus (Carbon-Arc Type) With and Without Water for Exposure of Nonmetallic Materials
ASTM G 26	(1995) Operating Light-Exposure Apparatus (Xenon-Arc Type) With and Without Water for Exposure of Nonmetallic Materials
ASTM G 53	(1996) Operating Light- and Water-Exposure Apparatus (Fluorescent UV-Condensation Type) for Exposure of Nonmetallic Materials

1.2 SUBMITTALS

Government approval is required for submittals with a "GA" designation; submittals having an "FIO" designation are for information only. The following shall be submitted in accordance with Section 01330 - SUBMITTAL PROCEDURES:

SD-13 Certificates

Chain Link Fence; FIO.

Statement signed by an official authorized to certify on behalf of the manufacturer attesting that the chain link fence and component materials meet the specified requirements.

PART 2 - PRODUCTS

2.1 MATERIALS

Materials shall conform to the following:

2.1.1 Chain Link Fence Fabric

ASTM A 392, Class 1, zinc-coated steel wire with minimum coating weight of 1.2 ounces of zinc per square foot of coated surface, or ASTM A 491, Type I, aluminum-coated steel wire. Fabric shall be fabricated of 9 gauge wire woven in 2 inch mesh. Fabric height shall be as indicated on the drawings. Fabric shall be twisted and barbed on the top selvage and knuckled on the bottom selvage.

Fabric for personnel gates shall be 1-1/2" #9 expanded and flattened metal mesh in accordance with ASTM F 1267, Class 2, Grade A hot-dip zinc-coated (galvanized).

2.1.2 Gates

ASTM F 900 and/or ASTM F 1184. Gate shall be the type and swing shown. Gate frames shall conform to strength and coating requirements of ASTM F 1083 for Group IA, steel pipe, with external coating Type A, nominal pipe size (NPS) 1-1/2. Gate frames shall conform to strength and coating requirements of ASTM F 1043, for Group IC, steel pipe with external coating Type A or Type B, nominal pipe size (NPS) 1-1/2. Gate fabric shall be as specified for chain-link fabric. Each end member of gate frames shall be extended sufficiently above the top member to carry three strands of barbed wire in horizontal alignment with barbed wire strands on the fence. Gate leaves more than 8 feet wide shall have either intermediate members and diagonal truss rods or shall have tubular members as necessary to provide rigid construction, free from sag or twist. Gate leaves less than [2.44 m (8 feet)] [8 feet] wide shall have truss rods or intermediate braces. Gate fabric for personnel gates shall be welded to the center of the gate frame at each point around the edge of the fabric. Swing gate fabric shall be attached to the gate frame by method standard with the manufacturer except that welding will not be permitted. Latches, hinges, stops, keepers, rollers, and other hardware items shall be furnished as required for the operation of the gate. Latches shall be arranged for padlocking so that the padlock will be accessible from both sides of the gate. Stops shall be provided for holding the gates in the open position.

2.1.3 Posts

ASTM F 1083, zinc-coated. Group IA, with external coating Type A steel pipe. Group IC steel pipe, zinc-coated with external coating Type A or Type B and Group II, formed steel sections, shall meet the strength and coating requirements of ASTM F 1043. Sizes shall be as shown on the drawings. Line posts and terminal (corner, gate, and pull) posts selected shall be of the same designation throughout the fence except gate posts for personnel gates which shall be as shown on the drawings. Gate post shall be for the gate type specified subject to the limitation specified in ASTM F 900 and/or ASTM F 1184.

2.1.4 Braces and Rails

ASTM F 1083, zinc-coated, Group IA, steel pipe, size NPS 1-1/4. Group IC steel pipe, zinc-coated, shall meet the strength and coating requirements of ASTM F 1043. Group II, formed steel sections, size 1.66 inch, conforming to ASTM F 1043, may be used as braces and rails if Group II line posts are furnished.

2.1.5 Tension Wire

Tension wire shall be Type I or Type II, Class 2 coating, in accordance with ASTM A 824.

2.1.6 Accessories

ASTM F 626. Ferrous accessories shall be zinc or aluminum coated. Truss rods shall be furnished for each terminal post. Truss rods shall be provided with turnbuckles or other equivalent provisions for adjustment. Barbed wire shall be 2 strand, 12-1/2 gauge wire, zinc-coated, Class 3 in accordance with ASTM A 121 or aluminum coated Type I in accordance with ASTM A 585. Barbed wire shall be four-point barbed type steel wire. Barbed wire support arms shall be the single arm type and of the design required for the post furnished. Tie wire for attaching fabric to rails, braces, and posts shall be 9 gauge steel wire and match the coating of the fence fabric. Miscellaneous hardware coatings shall conform to ASTM A 153 unless modified herein.

2.1.7 Barbed Tape

Reinforced barbed tape, single coil, for fence toppings shall be fabricated from 430 series stainless steel with a hardness range of Rockwell (30N) 37-45 conforming to the requirements of ASTM A 176. The stainless steel strip shall be 0.025 inch thick by 1.0 inch wide before fabrication. Each barb shall be a minimum of [1.2 inch in length, in groups of 4, spaced on 4.0 inch centers. The stainless steel core wire shall have a 0.098 inch diameter with a minimum tensile strength of 140 psi and be in accordance with ASTM A 478. Sixteen gauge stainless steel twistable wire ties shall be used for attaching the barbed tape to the barbed wire .

2.1.8 Concrete

ASTM C 94, using 3/4 inch maximum size aggregate, and having minimum compressive strength of 3000 psi at 28 days. Grout shall consist of one part portland cement to three parts clean, well-graded sand and the minimum amount of water to produce a workable mix.

2.1.9 Lock Box

All material for lock boxes shall be 1/8 inch thick steel. All exposed joints shall be fully welded.

PART 3 - EXECUTION

3.1 GENERAL

Fence shall be installed to the lines and grades indicated. The area on either side of the fence line shall be cleared to the extent indicated. Line posts shall be spaced equidistant at intervals not exceeding 10 feet. Terminal (corner, gate, and pull) posts shall be set at abrupt changes in vertical and horizontal alignment. Fabric shall be continuous between terminal posts; however, runs between terminal posts shall not exceed 500 feet. Any damage to galvanized surfaces, including welding, shall be repaired with paint containing zinc dust in accordance with ASTM A 780.

3.2 EXCAVATION

Post holes shall be cleared of loose material. Waste material shall be spread where directed. The ground surface irregularities along the fence line shall be eliminated to the extent necessary to maintain a 1 inch clearance between the bottom of the fabric and finish grade.

3.3 POSTS

Posts shall be set plumb and in alignment. Except where solid rock is encountered, posts shall be set in concrete to the depth indicated on the drawings. Where solid rock is encountered with no overburden, posts shall be set to a minimum depth of 18 inches in rock. Where solid rock is covered with an overburden of soil or loose rock, posts shall be set to the minimum depth indicated on the drawing unless a penetration of 18 inches in solid rock is achieved before reaching the indicated depth, in which case depth of penetration shall terminate. All portions of posts set in rock shall be grouted. Portions of posts not set in rock shall be set in concrete from the rock to ground level. Posts set in concrete shall be set in holes not less than the diameter shown on the drawings. Diameters of holes in solid rock shall be at least 1 inch greater than the largest cross section of the post. Concrete and grout shall be thoroughly consolidated around each post, shall be free of voids and finished to form a dome. Concrete and grout shall be allowed to cure for 72 hours prior to attachment of any item to the posts. Group II line posts may be mechanically driven, for temporary fence construction only, if rock is not encountered. Driven posts shall be set to a minimum depth of 3 feet and shall be protected with drive caps when being set.

3.4 RAILS

3.4.1 Top Rail

Top rail shall be supported at each post to form a continuous brace between terminal posts. Where required, sections of top rail shall be joined using sleeves or couplings that will allow expansion or contraction of the rail. Bottom rail, if required for high security fence, shall be installed as indicated on the drawings.

3.5 BRACES AND TRUSS RODS

Braces and truss rods shall be installed as indicated and in conformance with the standard practice for the fence furnished. Horizontal (compression) braces and diagonal truss (tension) rods shall be installed on fences over 6 feet in height. A center brace or 2 diagonal truss rods shall be installed on 12 foot fences. Braces and truss rods shall extend from terminal posts to line posts. Diagonal braces shall form an angle of approximately 40 to 50 degrees with the horizontal. No bracing is required on fences 6 feet high or less if a top rail is installed.

3.6 TENSION WIRES

Tension wires shall be installed along the [top and] bottom of the fence line and attached to the terminal posts of each stretch of the fence. Bottom

tension wire shall be installed within the bottom 6 inches of the installed fabric. Tension wire shall be pulled taut and shall be free of sag.

3.7 CHAIN LINK FABRIC

Chain link fabric shall be installed on the side of the post indicated. Fabric shall be attached to terminal posts with stretcher bars and tension bands. Bands shall be spaced at approximately 15 inch intervals. The fabric shall be installed and pulled taut to provide a smooth and uniform appearance free from sag, without permanently distorting the fabric diamond or reducing the fabric height. Fabric shall be fastened to line posts at approximately 15 inch intervals and fastened to all rails and tension wires at approximately 12 inch intervals. Fabric shall be cut by untwisting and removing pickets. Splicing shall be accomplished by weaving a single picket into the ends of the rolls to be joined. The bottom of the installed fabric shall be 1 inch (plus or minus 1/2 inch) above the ground. After the fabric installation is complete, the fabric shall be exercised by applying a 50 pound push-pull force at the center of the fabric between posts. The use of a 30 pound pull at the center of the panel shall cause fabric deflection of not more than 2.5 inches when pulling fabric from the post side of the fence. Every second fence panel shall meet this requirement. All failed panels shall be resecured and retested at the Contractor's expense.

3.8 BARBED WIRE SUPPORTING ARMS AND BARBED WIRE

Barbed wire supporting arms and barbed wire shall be installed as indicated and as recommended by the manufacturer. Supporting arms shall be anchored with 3/8 inch diameter plain pin rivets or, at the Contractor's option, with studs driven by low-velocity explosive-actuated tools for steel, wrought iron, ductile iron, or malleable iron. Studs driven by an explosive-actuated tool shall not be used with gray iron or other material that can be fractured. A minimum of two studs per support arm shall be used. Barbed wire shall be pulled taut and attached to the arms with clips or other means that will prevent easy removal.

3.9 GATES

Gates shall be installed at the locations shown. Hinged gates shall be mounted to swing as indicated. Latches, stops, and keepers shall be installed as required. Hinge pins, and hardware shall be welded or otherwise secured to prevent removal.

3.10 BARBED TAPE

Stainless steel reinforced barbed tape shall be installed as detailed on the drawings. Barbed tape shall be stretched out to its manufacturer's recommended length, set on top of the barbed wire and support arms, and then secured to the barbed wire. The barbed tape shall be secured to the barbed wire at the two points and at every spiral turn of each coil as shown on the drawings.

3.11 GROUNDING

Fences shall be grounded on each side of all gates, at each corner, at the closest approach to each building located within 50 feet of the fence, and where the fence alignment changes more than 15 degrees. Grounding locations shall not exceed 650 feet. Each gate panel shall be bonded with a flexible bond strap to its gate post. Fences crossed by powerlines of 600 volts or more shall be grounded at or near the point of crossing and at distances not exceeding 150 feet on each side of crossing. Ground conductor shall consist of No. 6 AWG solid copper wire. Grounding electrodes shall be [19 mm (3/4 inch)] 3/4 inch by 10 foot long copper-clad steel rod. Electrodes shall be driven into the earth so that the top of the electrode is at least 6 inches below the grade. Where driving is impracticable, electrodes shall be buried a minimum of 12 inches deep and radially from the fence. The top of the electrode shall be not less than 2 feet or more than 8 feet from the fence. Ground conductor shall be clamped to the fence and electrodes with bronze grounding clamps to create electrical continuity between fence posts, fence fabric, and ground rods. After installation the total resistance of fence to ground shall not be greater than 25 ohms.

- - o 0 o - -

SECTION 03100 - STRUCTURAL CONCRETE FORMWORK

PART 1 - GENERAL

1.1 REFERENCES

The publications listed below form a part of this specification to the extent referenced. The publications are referred to in the text by basic designation only.

AMERICAN CONCRETE INSTITUTE (ACI)

ACI 347R	(1994) Guide to Formwork for Concrete

AMERICAN HARDBOARD ASSOCIATION (AHA)

AHA A135.4	(1982; R 1988) Basic Hardboard

AMERICAN SOCIETY FOR TESTING AND MATERIALS (ASTM)

ASTM C 578	(1992) Rigid, Cellular Polystyrene Thermal Insulation

DEPARTMENT OF COMMERCE (DOC)

DOC PS 1	(1983) Construction and Industrial Plywood

1.2 SUBMITTALS

Government approval is required for submittals with a "GA" designation; submittals having an "FIO" designation are for information only. The following shall be submitted in accordance with Section 01330 - SUBMITTAL PROCEDURES:

SD-01, Data

Concrete Formwork; FIO.

Manufacturer's data including literature describing form materials, accessories, and form releasing agents.

1.3 DESIGN

Formwork shall be designed in accordance with methodology of ACI 347R for anticipated loads, lateral pressures, and stresses. Forms shall be capable of producing a surface which meets the requirements of the class of finish specified in Section 03300 CAST-IN-PLACE STRUCTURAL CONCRETE. Forms shall be capable of withstanding the pressures resulting from placement and vibration of concrete.

1.4 STORAGE AND HANDLING

Fiber voids shall be stored above ground level in a dry location. Fiber voids shall be kept dry until installed and overlaid with concrete.

PART 2 - PRODUCTS

2.1 FORM MATERIALS

2.1.1 Forms For Class B Finish

Forms for Class B finished surfaces shall be plywood panels conforming to DOC PS 1, Grade B-B concrete form panels, Class I or II. Other form materials or liners may be used provided the smoothness and appearance of concrete produced will be equivalent to that produced by the plywood concrete form panels. Forms for round columns shall be the prefabricated seamless type.

2.1.2 Forms For Class C Finish

Forms for Class C finished surfaces shall be shiplap lumber; plywood conforming to DOC PS 1, Grade B-B concrete form panels, Class I or II; tempered concrete form hardboard conforming to AHA A135.4; other approved concrete form material; or steel, except that steel lining on wood sheathing shall not be used. Forms for round columns may have one vertical seam.

2.1.3 Forms For Class D Finish

Forms for Class D finished surfaces, except where concrete is placed against earth, shall be wood or steel or other approved concrete form material.

2.1.4 Retain-In-Place Metal Forms

Retain-in-place metal forms for concrete slabs and roofs shall be as specified in Section 05300 STEEL DECKING.

2.1.5 Pan-Form Units

Pan-form units for one-way or two-way concrete joist and slab construction shall be factory-fabricated units of the approximate section indicated. Units shall consist of steel or molded fiberglass concrete form pans. Closure units shall be furnished as required.

2.1.6 Form Ties

Form ties shall be factory-fabricated metal ties, shall be of the removable or internal disconnecting or snap-off type, and shall be of a design that will not permit form deflection and will not spall concrete upon removal. Solid backing shall be provided for each tie. Except where removable tie rods are used, ties shall not leave holes in the concrete surface less than 1/4 inch nor more than 1 inch deep and not more than 1 inch in diameter. Removable tie rods shall be not more than 1-1/2 inches in diameter.

2.1.7 Form Releasing Agents

Form releasing agents shall be commercial formulations that will not bond with, stain or adversely affect concrete surfaces. Agents shall not impair subsequent treatment of concrete surfaces depending upon bond or adhesion nor impede the wetting of surfaces to be cured with water or curing compounds.

2.1.8 Polystyrene Rigid Insulation

Polystyrene rigid insulation shall conform to ASTM C 578, Type V, VI, or VII, square edged. Size shall be 1-1/2 inches thick by 16 inches in height by 3 feet in length, unless otherwise indicated.

PART 3 - EXECUTION

3.1 INSTALLATION

3.1.1 Formwork

Forms shall be mortar tight, properly aligned and adequately supported to produce concrete surfaces meeting the surface requirements specified in Section 03300 CAST-IN-PLACE STRUCTURAL CONCRETE and conforming to construction tolerance given in TABLE 1. Where concrete surfaces are to have a Class A or Class B finish, joints in form panels shall be arranged as approved. Where forms for continuous surfaces are placed in successive units, care shall be taken to fit the forms over the completed surface so as to obtain accurate alignment of the surface and to prevent leakage of mortar. Forms shall not be reused if there is any evidence of surface wear and tear or defects which would impair the quality of the surface. Surfaces of forms to be reused shall be cleaned of mortar from previous concreting and of all other foreign material before reuse. Form ties that are to be completely withdrawn shall be coated with a nonstaining bond breaker.

3.2 CHAMFERING

Except as otherwise shown, external corners that will be exposed shall be chamfered, beveled, or rounded by moldings placed in the forms.

3.3 COATING

Forms for Class B finished surfaces shall be coated with a form releasing agent before the form or reinforcement is placed in final position. The coating shall be used as recommended in the manufacturer's printed or written instructions. Forms for Class C and D finished surfaces may be wet with water in lieu of coating immediately before placing concrete, except that in cold weather with probable freezing temperatures coating shall be mandatory. Surplus coating on form surfaces and coating on reinforcing steel and construction joints shall be removed before placing concrete.

3.4 REMOVAL OF FORMS

Forms shall be removed in a manner that will prevent injury to the concrete and ensure the complete safety of the structure. Formwork for columns, walls, side of beams and other parts not supporting the weight of concrete may be removed when the concrete has attained sufficient strength to resist damage from the removal operation but not before at least 24 hours has elapsed since concrete placement. Supporting forms and shores shall not be removed from beams, floors and walls until the structural units are strong enough to carry their own weight and any other construction or natural loads. In no case will supporting forms or shores be removed before the concrete strength has reached 70 percent of design strengths as determined by field cured cylinders or other approved methods. This strength shall be demonstrated by job-cured test

specimens, and by a structural analysis considering the proposed loads in relation to these test strengths and the strength of forming and shoring system. The job-cured test specimens for form removal purposes shall be provided in numbers as directed and shall be in addition to those required for concrete quality control. The specimens shall be removed from molds at the age of 24 hours and shall receive, insofar as possible, the same curing and protection as the structures they represent.

TABLE 1
TOLERANCES FOR FORMED SURFACES

1. Variations from the plumb:	In any 10 feet of length ----- 1/4 inch
a. In the lines and surfaces of columns, piers, walls	Maximum for entire length ----- 1 inch and in arises
b. For exposed corner columns, control-joint grooves, and other conspicuous lines	In any 20 feet of length ----- 1/4 inch Maximum for entire length ---- 1/2 inch
2. Variation from the level or from the grades indicated on the drawings:	In any 10 feet of length ----- 1/4 inch In any bay or in any 20 feet of length ---------- 3/8 inch
a. In slab soffits, ceilings, beam soffits, and in arises, supporting shores	Maximum for entire length ---- 3/4 inch measured before removal of
b. In exposed lintels, sills, parapets, horizontal grooves, and other conspicuous lines	In any bay or in any 20 feet of length ---------- 1/4 inch Maximum for entire length ---- 1/2 inch
3. Variation of the linear building lines from established position in plan	In any 20 feet ---------- 1/2 inch Maximum ---------- 1 inch
4. Variation of distance between walls, columns, partitions	1/4 inch per 10 feet of distance, but not more than 1/2 inch in any one bay, and not more than 1 inch total variation
5. Variation in the sizes and locations of sleeves, floor openings, and wall opening	Minus ---------- 1/4 inch Plus ---------- 1/2 inch
6. Variation in cross-sectional dimensions of columns and beams and in the thickness of slabs and walls	Minus ---------- 1/4 inch Plus ---------- 1/2 inch
7. Footings:	
a. Variation of dimensions in plan	Minus ---------- 1/2 inch Plus ---------- 2 inches when formed or plus 3 inches when placed

	against unformed excavation
b. Misplacement of eccentricity	2 percent of the footing width in the direction of misplacement but not more than ---------- 2 inches
c. Reduction in thickness	Minus ---------- 5 percent of specified thickness
8. Variation in steps:	Riser ---------- 1/8 inch
a. In a flight of stairs	Tread ---------- 1/4 inch
b. In consecutive steps	Riser ---------- 1/16 inch Tread ---------- 1/8 inch

- - o 0 o - -

SECTION 03200 - CONCRETE REINFORCEMENT

PART 1 - GENERAL

1.1 REFERENCES

The publications listed below form a part of this specification to the extent referenced. The publications are referred to in the text by basic designation only.

AMERICAN CONCRETE INSTITUTE (ACI)

ACI 318/318R	(1989; Rev 1992; Errata) Building Code Requirements for Reinforced Concrete

AMERICAN SOCIETY FOR TESTING AND MATERIALS (ASTM)

ASTM A 82	(1990a) Steel Wire, Plain, for Concrete Reinforcement
ASTM A 184	(1990) Fabricated Deformed Steel Bar Mats for Concrete Reinforcement
ASTM A 185	(1990a) Steel Welded Wire Fabric, Plain, for Concrete Reinforcement
ASTM A 615	(1992b) Deformed and Plain Billet-Steel Bars for Concrete Reinforcement
ASTM A 706	(1992b) Low-Alloy Steel Deformed Bars for Concrete Reinforcement
ASTM A 775	(1992) Standard Specification for Epoxy-Coated Reinforcing Steel Bars
ASTM C 1116	(1991) Fiber-Reinforced Concrete and Shotcrete

AMERICAN WELDING SOCIETY (AWS)

AWS D1.4	(1992) Structural Welding Code - Reinforcing Steel

CONCRETE REINFORCING STEEL INSTITUTE (CRSI)

CRSI MSP-1	(1990) Manual of Standard Practice

1.2 SUBMITTALS

Government approval is required for submittals with a "GA" designation; submittals having an "FIO" designation are for information only. The following shall be submitted in accordance with Section 01330 - SUBMITTAL PROCEDURES:

SD-04, Drawings

Concrete Reinforcement System; FIO.

Detail drawings showing reinforcing steel schedules, sizes, grades, and splicing and bending details.

SD-08, Statements

Qualifications; FIO.

A list of names of qualified welders.

SD-13, Certificates

Reinforcing Steel; FIO.

Certified copies of mill reports attesting that the reinforcing steel furnished meets the requirements specified, prior to the installation of reinforcing steel.

1.3 QUALIFICATIONS

Welders shall be qualified in accordance with AWS D1.4. Qualification test shall be performed at the worksite and the Contractor shall notify the Contracting Officer 24 hours prior to conducting tests. Special welding procedures and welders qualified by others may be accepted as permitted by AWS D1.4.

1.4 DELIVERY AND STORAGE

Reinforcement and accessories shall be stored off the ground on platforms, skids, or other supports.

PART 2 - PRODUCTS

2.1 DOWELS

Dowels shall conform to ASTM A 615, Grade 60 or smooth bars conforming to ASTM A 36 as indicated on the drawings.

2.2 FABRICATED BAR MATS

Fabricated bar mats shall conform to ASTM A 184.

2.3 REINFORCING STEEL

Reinforcing steel shall be deformed bars conforming to ASTM A 615 or ASTM A 706, grade 60 and sizes as indicated.

2.4 WELDED WIRE FABRIC

Welded wire fabric shall conform to ASTM A 185. Welded wire fabric shall be provided in flat sheets.

2.5 WIRE TIES

Wire ties shall be 16 gauge or heavier black annealed steel wire.

2.6 SUPPORTS

Bar supports for formed surfaces shall be designed and fabricated in accordance with CRSI MSP-1 and shall be steel or precast concrete blocks. Precast concrete blocks shall have wire ties and shall be not less than 4 inches square when supporting reinforcement on ground. Precast concrete block shall have compressive strength equal to that of the surrounding concrete. Where concrete formed surfaces will be exposed to weather or where surfaces are to be painted, steel supports within 1/2-inch of concrete surface shall be galvanized, plastic protected or of stainless steel. Concrete supports used in concrete exposed to view shall have the same color and texture as the finish surface. For slabs on ground, supports shall be precast concrete blocks or plastic coated steel fabricated with bearing plates. Plastic supports are not acceptable.

PART 3 - EXECUTION

3.1 REINFORCEMENT

Reinforcement shall be fabricated to shapes and dimensions shown and shall conform to the requirements of ACI 318/318R. Reinforcement shall be cold bent unless otherwise authorized. Bending may be accomplished in the field or at the mill. Bars shall not be bent after embedment in concrete. Safety caps shall be placed on all exposed ends of concrete reinforcement bars that pose a safety hazard. Wire tie ends shall face away from the forms.

3.1.1 Placement

Reinforcement shall be free from loose rust and scale, dirt, oil, or other deleterious coating that could reduce bond with the concrete. Reinforcement shall be placed in accordance with ACI 318/318R at locations shown plus or minus one bar diameter. Reinforcement shall not be continuous through expansion joints and shall be as indicated through construction or contraction joints. Concrete coverage shall be as indicated or as required by ACI 318/318R. If bars are moved more than one bar diameter to avoid interference with other reinforcement, conduits or embedded items, the resulting arrangement of bars, including additional bars required to meet structural requirements, shall be approved before concrete is placed. In the event of a conflict in locations of embedded items and steel reinforcement, the relocation of the embedded items or cutting, bending, addition, displacement or omission of steel reinforcement will only be permitted with the approval of the Contracting Officer.

3.1.1.1 Ribbed Mat Foundations

Reinforcement shall be continuous through construction joints, but not through expansion and contraction joints.

3.1.2 Splicing

Splices of reinforcement shall conform to ACI 318/318R and shall be made only as required or indicated. Splicing shall be by lapping or by mechanical or welded butt connection; except that lap splices shall not be used for bars larger than No. 11 unless otherwise indicated. Welding shall conform to AWS D1.4. Welded butt splices shall be full penetration butt welds. Lapped bars shall be placed in contact and securely tied or spaced transversely apart to permit the embedment of the entire surface of each bar in concrete. Lapped bars shall not be spaced farther apart than one-fifth the required length of lap or 6 inches. Mechanical butt splices shall be in accordance with the recommendation of the manufacturer of the mechanical splicing device. Butt splices shall develop 125 percent of the specified minimum yield tensile strength of the spliced bars or of the smaller bar in transition splices. Bars shall be flame dried before butt splicing. Adequate jigs and clamps or other devices shall be provided to support, align, and hold the longitudinal centerline of the bars to be butt spliced in a straight line.

3.2 WELDED-WIRE FABRIC

Welded-wire fabric shall be placed in slabs as indicated. Fabric placed in slabs on ground shall be continuous between construction, and contraction joints. Fabric placed in slabs on ground shall be discontinuous between expansion joints. Fabric placement at joints shall be as indicated. Lap splices shall be made in such a way that the overlapped area equals the distance between the outermost crosswires plus 2 inches. Laps shall be staggered to avoid continuous laps in either direction. Fabric shall be wired or clipped together at laps at intervals not to exceed 4 feet. Fabric shall be positioned by the use of supports.

3.2.1 Ribbed Mat Foundations

Fabric shall be continuous through construction joints, but not through expansion and contraction joints.

3.3 DOWELS

Dowels shall be installed in slabs on ground at locations indicated and at right angles to joint being doweled. Type of dowel shall be as indicated on the drawings. Dowels shall be accurately positioned and aligned parallel to the finished concrete surface before concrete placement. Dowels shall be rigidly supported during concrete placement. One end of dowels shall be coated with a bond breaker with a 1/2" space at the end of the dowel or surrounded by a sleeve. Sleeves shall project 1/2" beyond the end of the dowel with the sleeve end sealed. Dowels shall be tied in place prior to concrete placement. Inserting dowels into concrete that has already been placed is not acceptable.

- - o 0 o - -

SECTION 03300

CAST-IN-PLACE STRUCTURAL CONCRETE

PART 1 - GENERAL

REFERENCES

The publications listed below form a part of this specification to the extent referenced. The publications are referred to in the text by basic designation only.

AMERICAN ASSOCIATION OF STATE HIGHWAY AND TRANSPORTATION OFFICIALS (AASHTO)

AASHTO M 182	(1991I) Burlap Cloth Made From Jute or Kenaf

AMERICAN CONCRETE INSTITUTE (ACI)

ACI 117/A117R	(1990; Errata) Standard Tolerances for Concrete Construction and Materials
ACI 211.1	(1991) Standard Practice for Selecting Proportions for Normal, Heavyweight, and Mass Concrete
ACI 211.2	(1991) Standard Practice for Selecting Proportions for Structural Lightweight Concrete
ACI 214.3R	(1988) Simplified Version of the Recommended Practice for Evaluation of Strength Test Results of Concrete
ACI 301	(1989) Structural Concrete for Buildings
ACI 302.1R	(1989) Guide for Concrete Floor and Slab Construction
ACI 305R	(1991) Hot Weather Concreting
ACI 306R	(1988) Cold Weather Concreting
ACI 318/318R	(1989; Rev 1992; Errata) Building Code Requirements for Reinforced Concrete

AMERICAN SOCIETY FOR TESTING AND MATERIALS (ASTM)

ASTM C 31	(1991) Making and Curing Concrete Test Specimens in the Field
ASTM C 33	(1993) Concrete Aggregates
ASTM C 39	(1993a) Compressive Strength of Cylindrical Concrete Specimens

ASTM C 42	(1990) Obtaining and Testing Drilled Cores and Sawed Beams of Concrete
ASTM C 78	(1994) Flexural Strength of Concrete (Using Simple Beam With Third-Point Loading)
ASTM C 94	(1994) Ready-Mixed Concrete
ASTM C 131	(1989) Resistance to Degradation of Small-Size Coarse Aggregate by Abrasion and Impact in the Los Angeles Machine
ASTM C 136	(1993) Sieve Analysis of Fine and Coarse Aggregates
ASTM C 150	(1994) Portland Cement
ASTM C 171	(1992) Sheet Materials for Curing Concrete
ASTM C 172	(1990) Sampling Freshly Mixed Concrete
ASTM C 173	(1994a) Air Content of Freshly Mixed Concrete by the Volumetric Method
ASTM C 192	(1990a) Making and Curing Concrete Test Specimens in the Laboratory
ASTM C 231	(1991b) Air Content of Freshly Mixed Concrete by the Pressure Method
ASTM C 260	(1994) Air-Entraining Admixtures for Concrete
ASTM C 309	(1993) Liquid Membrane-Forming Compounds for Curing Concrete
ASTM C 330	(1989) Lightweight Aggregates for Structural Concrete
ASTM C 494	(1992) Chemical Admixtures for Concrete
ASTM C 496	(1990) Splitting Tensile Strength of Cylindrical Concrete Specimens
ASTM C 552	(1991) Cellular Glass Thermal Insulation
ASTM C 578	(1992) Rigid, Cellular Polystyrene Thermal Insulation
ASTM C 591	(1985) Unfaced Preformed Rigid Cellular Polyurethane Thermal Insulation
ASTM C 595	(1994a) Blended Hydraulic Cements

ASTM C 618	(1994) Coal Fly Ash and Raw or Calcined Natural Pozzolan for Use as a Mineral Admixture in Portland Cement Concrete
ASTM C 881	(1990) Epoxy-Resin-Base Bonding Systems for Concrete
ASTM C 1017	(1992) Chemical Admixtures for Use in Producing Flowing Concrete
ASTM C 1059	(1991) Latex Agents for Bonding Fresh to Hardened Concrete
ASTM C 1064	(1986, R 1993) Temperature of Freshly Mixed Portland Cement Concrete
ASTM C 1077	(1995) Standard Practice for Laboratories Testing Concrete and Concrete Aggregates for Use in Construction and Criteria for Laboratory Evaluation
ASTM C 1107	(1991a) Packaged Dry, Hydraulic-Cement Grout (Nonshrink)
ASTM D 75	(1987; R 1992) Sampling Aggregates
ASTM E 96	(1994) Water Vapor Transmission of Materials
ASTM E 1155	(1987) Determining Floor Flatness and Levelness Using the F-Number System

CORPS OF ENGINEERS (COE)

COE CRD-C 55	(1992) Test Method for Within-Batch Uniformity of Freshly Mixed Concrete
COE CRD-C 94	(1995) Surface Retarders
COE CRD-C 104	(1980) Method of Calculation of the Fineness Modulus of Aggregate
COE CRD-C 400	(1963) Requirements for Water for Use in Mixing or Curing Concrete
COE CRD-C 521	(1981) Standard Test Method for Frequency and Amplitude of Vibrators for Concrete
COE CRD-C 572	(1974) Corps of Engineers Specifications for Polyvinylchloride Waterstop

NATIONAL READY-MIXED CONCRETE ASSOCIATION (NRMCA)

NRMCA-01	(1992) Truck Mixer Agitator and Front Discharge Concrete Carrier Standards of the Truck Mixer Manufacturers Bureau
NRMCA CPMB 100 (COE CRD-C 514)	(1990) Concrete Plant Standards
NRMCA QC 3	(1984) Quality Control Manual: Section 3, Plant Certifications Checklist: Certification of Ready Mixed Concrete Production Facilities

1.1 SUBMITTALS

Government approval is required for submittals with a "GA" designation; submittals having an "FIO" designation are for information only. The following shall be submitted in accordance with Section 01330 SUBMITTAL PROCEDURES:

SD-08 Statements

Mixture Proportions; GA.

The results of trial mixture design studies along with a statement giving the maximum nominal coarse aggregate size and the proportions of ingredients that will be used in the manufacture of each strength or class of concrete, at least 21 days prior to commencing concrete placing operations. Aggregate weights shall be based on the saturated surface dry condition. The statement shall be accompanied by test results from an approved independent commercial testing laboratory, showing that mixture design studies have been made with materials proposed for the project and that the proportions selected will produce concrete of the qualities indicated. No substitutions shall be made in the materials used in the mixture design studies without additional tests to show that the quality of the concrete is satisfactory.

Concrete Testing Sampling Plan; GA

A plan outlining concrete testing procedures and sampling intervals.

SD-09 Reports

Testing and Inspection for Contractor Quality Control; GA.

Certified copies of laboratory test reports, including mill tests and all other test data, for portland cement, blended cement, pozzolan, , silica fume, aggregate, admixtures, and curing compound proposed for use on this project. These tests shall be made by an approved commercial testing laboratory or by a testing laboratory maintained by the manufacturers of the materials.

SD-13 Certificates

Qualifications; GA .

Written documentation for Contractor Quality Control personnel, Concrete Field Testing Technician and ACI Concrete Flatwork Technician/Finisher.

SD-14 Samples

Surface Retarder; GA.

Surface retarder material with manufacturer's instructions for application in conjunction with air-water cutting.

1.2 MATERIAL ACCEPTANCE TESTING

1.2.1 Preconstruction Sampling and Testing of Materials

Preconstruction Testing. The Contractor will be responsible for testing all ingredients that are utilized in the concrete. No ingredient shall be used or concrete placed until all tests have been completed utilizing the applicable test methods and the Contracting Officer notifies the Contractor that the test results are satisfactory. The Contractor shall notify the Contracting Officer of the manufacturer's brand name and type of each ingredient to be used in the concrete.

1.2.2 Aggregates

The aggregate sources listed in SECTION 01600: AGGREGATE SOURCES have been determined to be capable of producing materials of a quality acceptable for this project. Proposed materials produced from similar strata, or of similar quality, must be approved. If the Contractor proposes to furnish aggregates from a source not listed in SECTION 01600: AGGREGATE SOURCES, samples consisting of not less than 2,000 pounds of each size coarse aggregate and 2,000 pounds of fine aggregate taken under supervision of the Contracting Officer in accordance with CRD-C 100 shall be delivered to Commander and Director, U.S. Army Engineer Waterways Experiment Station (CEWES-SC-MP), 3909 Halls Ferry Road, Vicksburg, MS 39180-6199 within 15 days after notice to proceed. Sampling and shipment of samples shall be at the Contractor's expense. A maximum of 90 days will be required to complete evaluation of the aggregates. Testing by and at the expense of the Government will be in accordance with he applicable CRD or ASTM test method. Tests to which aggregate may be subjected are specific gravity, absorption, Los Angeles Abrasion, soundness in magnesium sulfate, petrographic analysis, cycles of freezing and thawing in concrete, alkali-aggregate reaction, organic impurities, and any other test necessary to demonstrate that the aggregate is of a quality that is at least equivalent to those sources listed in SECTION 01600: AGGREGATE SOURCES.

1.2.2.1 Prequalified Cement Sources

Cement shall be delivered and used directly from a mill of a producer designated as a qualified source. A list of prequalified cement sources is available from the Commander and Director, U.S. Army Engineer Waterways Experiment Station (CEWES-SC-MP), 3909 Halls Ferry Road, Vicksburg, MS 39180-6199). If the Contractor proposes to use cement from a source that is not prequalified, the Contractor shall notify CEWES-SC-MP within 7 days after notice to proceed and request instructions on how to have the cement source qualified.

1.2.2.2 Prequalified Pozzolan Sources

Pozzolan shall be delivered and used directly from a producer designated as a qualified source. A list of prequalified pozzolan sources is available from the Commander and Director, U.S. Army Engineer Waterways Experiment Station (CEWES-SC-MP), 3909 Halls Ferry Road, Vicksburg, MS 39180-6199. If the Contractor proposes to use pozzolan that is not from a prequalified source, the Contractor shall notify CEWES-SC-MP within 7 days after notice to proceed and request instructions on how to have the source qualified.

1.3 QUALIFICATIONS

Contractor Quality Control personnel assigned to concrete construction shall be American Concrete Institute (ACI) Certified Workmen in one of the following grades or shall have written evidence of having completed similar qualification programs:

Concrete Field Testing Technician, Grade I

The foreman or lead journeyman of the flatwork finishing crew shall have similar qualification for ACI Concrete Flatwork Technician/Finisher or equal, with written documentation.

1.4 GENERAL REQUIREMENTS

1.4.1 Tolerances

Except as otherwise specified herein, tolerances for concrete batching, mixture properties, and construction as well as definition of terms and application practices shall be in accordance with ACI 117/A117R. Level and grade tolerance measurements of slabs shall be made as soon as possible after finishing; when forms or shoring are used, the measurements shall be made prior to removal.

1.4.1.1 Floors by the Straightedge System

The flatness of the floors shall be carefully controlled and the tolerances shall be measured by the straightedge system as specified in paragraph 4.5.7 of ACI 117/A117R, using a 3 m (10 foot) straightedge, within 72 hours after floor slab installation and before shores and/or forms are removed. The listed tolerances shall be met at any and every location at which the straightedge can be placed.

Bullfloated	5/16"
Straightedged	1/4"
Float Finish	3/16"
Trowel Finish	1/8"

1.4.2 Strength Requirements and w/c Ratio

1.4.2.1 Strength Requirements

Specified compressive strength (f'c) shall be as follows:

COMPRESSIVE STRENGTH	STRUCTURE OR PORTION OF STRUCTURE
3000 psi at 28 days	All areas of the structure.

Concrete made with high-early strength cement shall have a 7-day strength equal to the specified 28-day strength for concrete made with Type I or II portland cement. Compressive strength shall be determined in accordance with ASTM C 39.

a. Evaluation of Concrete Compressive Strength. Evaluation of compressive strength of concrete shall be based on 28 day strength tests only. Compressive strength specimens (152 by 305 mm (6 by 12 inch) cylinders) shall be fabricated by an approved independent commercial testing laboratory and cured in accordance with ASTM C 31 and tested in accordance with ASTM C 39. The strength of the concrete will be considered satisfactory so long as the average of all sets of three consecutive test results equals or exceeds the specified compressive strength f'c and no individual test result falls below the specified strength f'c by more than 3.5 MPa. (500 psi.) See paragraph "Concrete Mixture," subparagraph "Strength Specimens," in PART 3 for specimen requirements. A "test" is defined as the average of two companion cylinders, or if only one cylinder is tested, the results of the single cylinder test. Additional analysis or testing, including taking cores and/or load tests may be required at the Contractor's expense when the strength of the concrete in the structure is considered potentially deficient.

b. Investigation of Low-Strength Compressive Test Results. When any strength test of standard-cured test cylinders falls below the specified strength requirement by more than 3.5 MPa (500 psi) or if tests of field-cured cylinders indicate deficiencies in protection and curing, steps shall be taken to assure that the load-carrying capacity of the structure is not jeopardized. When the strength of concrete in place is considered potentially deficient, cores shall be obtained and tested in accordance with ASTM C 42. At least three representative cores shall be taken from each member or area of concrete in place that is considered potentially deficient. The location of cores will be determined by the Contracting Officer to least impair the strength of the structure. Concrete in the area represented by the core testing will be considered adequate if the average strength of the cores is equal to at least 85 percent of the specified strength requirement and if no single core is less than 75 percent of the specified strength requirement. Non-destructive tests (tests other than test cylinders or cores) shall not be used as a basis for acceptance or rejection. The Contractor shall perform the coring and repair the holes. Cores will be tested by the Government.

c. Load Tests. If the core tests are inconclusive or impractical to obtain or if structural analysis does not confirm the safety of the structure, load tests may be directed by the Contracting Officer in accordance with the requirements of ACI 318/318R. Concrete work evaluated by structural analysis or by results of a load test as being understrength shall be corrected in a manner satisfactory to the Contracting Officer. All investigations, testing, load tests, and correction of deficiencies shall be performed by and at the expense of the Contractor and must be approved by the Contracting Officer, except that if all concrete is found to be in compliance with the drawings and specifications, the cost of investigations, testing, and load tests will be at the expense of the Government.

1.4.3 Air Entrainment

Except as otherwise specified for lightweight concrete, all normal weight concrete shall be air entrained to contain between 4 and 6 percent total air, except that when the nominal maximum size coarse aggregate is 19 mm (3/4 inch) or smaller it shall be between 5 and 7 percent. Concrete with specified strength over 35 MPa (5000 psi) may have 1.0 percent less air than specified above. Specified air content shall be attained at point of placement into the forms. Air content for normal weight concrete shall be determined in accordance with ASTM C 231.

1.4.4 Slump

Slump of the concrete, as delivered to the point of placement into the forms, shall be within the following limits. Slump shall be determined in accordance with ASTM C 143.

Structural Element	Slump Minimum	Slump Maximum
Walls, columns and beams	50 mm (2 in.)	100 mm (4 in.)
Foundation walls, substructure walls, footings, slabs	25 mm (1 in.)	75 mm (3 in.)
Drilled Piers	125 mm (5 in.)	175 mm (7 in.)
Any structural concrete approved for placement by pumping:		
At pump	50 mm (2 in.)	150 mm (6 in.)
At discharge of line	25 mm (1 in.)	100 mm (4 in.)

When use of a plasticizing admixture conforming to ASTM C 1017 or when a Type F or G high range water reducing admixture conforming to ASTM C 494 is permitted to increase the slump of concrete, concrete shall have a slump of 50 to 100 mm (2 to 4 inches) before the admixture is added and a maximum slump of 200 mm (8 inches) at the point of delivery after the admixture is added.

1.4.5 Concrete Temperature

The temperature of the concrete as delivered shall be as specified in paragraph: "Hot Weather Requirements." When the ambient temperature during placing is 5 degrees C (40 degrees F) or less, or is expected to be at any time within 6 hours after placing, the temperature of the concrete as delivered shall be between 12 and 25 degrees C. (55 and 75 degrees F.)

1.4.6 Size of Coarse Aggregate

The largest feasible nominal maximum size aggregate (NMSA) specified in paragraph AGGREGATES shall be used in each placement. However, nominal maximum size of aggregate shall not exceed any of the following: three-fourths of the minimum cover for reinforcing bars, three-fourths of the minimum clear spacing between reinforcing bars, one-fifth of the narrowest dimension between sides of forms, or one-third of the thickness of slabs or toppings.

1.4.7 Special Properties and Products

Concrete may contain admixtures other than air entraining agents, such as water reducers, superplasticizers, or set retarding agents to provide special properties to the concrete, if specified or approved. Any of these materials to be used on the project shall be used in the mix design studies.

1.5 MIXTURE PROPORTIONS

Concrete shall be composed of portland cement, other cementitious and pozzolanic materials as specified, aggregates, water and admixtures as specified.

1.5.1 Proportioning Studies for Normal Weight Concrete

Trial design batches, mixture proportioning studies, and testing requirements for various classes and types of concrete specified shall be the responsibility of the Contractor. Except as specified for flexural strength concrete, mixture proportions shall be based on compressive strength as determined by test specimens fabricated in accordance with ASTM C 192 and tested in accordance with ASTM C 39. Samples of all materials used in mixture proportioning studies shall be representative of those proposed for use in the project and shall be accompanied by the manufacturer's or producer's test reports indicating compliance with these specifications. Trial mixtures having proportions, consistencies, and air content suitable for the work shall be made based on methodology described in ACI 211.1, using at least three different water-cement ratios for each type of mixture, which will produce a range of strength encompassing those required for each class and type of concrete required on the project. The maximum water-cement ratios required in the paragraph Maximum Allowable w/c Ratio will be the equivalent water-cement ratio as determined by conversion from the weight ratio of water to cement plus pozzolan and silica fume, if used, by the weight equivalency method as described in ACI 211.1. In the case where silica fume is used, the weight of the silica fume shall be included in the equations in ACI 211.1 for the term P, which is used to denote the weight of pozzolan. If pozzolan is used in the concrete mixture, the minimum pozzolan content shall be 15 percent by weight of the total cementitious material, and the maximum shall be 35 percent. Laboratory trial mixtures shall be designed for maximum permitted slump and air content. Separate sets of trial mixture studies shall be made for each combination of cementitious materials and each combination of admixtures proposed for use. No combination of either shall be used until proven by such studies, except that, if approved in writing and otherwise permitted by these specifications, an accelerator or a retarder may be used without separate trial mixture study. Separate trial mixture studies shall also be made for concrete for any conveying or placing method proposed which requires special properties and for concrete to be placed in unusually difficult placing locations. The temperature of concrete in each trial batch shall be reported. For each water-cement ratio, at least three test cylinders for each test age shall be made and cured in accordance with ASTM C 192. They shall be tested at 7 and 28 days in accordance with ASTM C 39. From these test results, a curve shall be plotted showing the relationship between water-cement ratio and strength for each set of trial mix studies. In addition, a curve shall be plotted showing the relationship between 7 day and 28 day strengths. Each mixture shall be designed to promote easy and suitable

concrete placement, consolidation and finishing, and to prevent segregation and excessive bleeding.

1.5.2 Average Compressive Strength Required for Mixtures

The mixture proportions selected during mixture design studies shall produce a required average compressive strength (f'cr) exceeding the specified compressive strength (f'c) by the amount indicated below. This required average compressive strength, f'cr, will not be a required acceptance criteria during concrete production. However, whenever the daily average compressive strength at 28 days drops below f'cr during concrete production, or daily average 7-day strength drops below a strength correlated with the 28-day f'cr, the mixture shall be adjusted, as approved, to bring the daily average back up to f'cr. During production, the required f'cr shall be adjusted, as appropriate, based on the standard deviation being attained on the job.

1.5.2.1 Computations from Test Records

Where a concrete production facility has test records, a standard deviation shall be established in accordance with the applicable provisions of ACI 214.3R. Test records from which a standard deviation is calculated shall represent materials, quality control procedures, and conditions similar to those expected; shall represent concrete produced to meet a specified strength or strengths (f'c) within 7 MPa (1,000 psi) of that specified for proposed work; and shall consist of at least 30 consecutive tests and be current to within the past 12 months. A strength test shall be the average of the strengths of two cylinders made from the same sample of concrete and tested at 28 days. Required average compressive strength f'cr used as the basis for selection of concrete proportions shall be the larger of the equations that follow using the standard deviation as determined above:

$$f'cr = f'c + 1.34S$$

$$f'cr = f'c + 2.33S - 500$$

Where S = standard deviation

Where a concrete production facility does not have test records meeting the requirements above but does have a record based on 15 to 29 consecutive tests, a standard deviation shall be established as the product of the calculated standard deviation and a modification factor from the following table:

NUMBER OF TESTS	MODIFICATION FACTOR FOR STANDARD DEVIATION
15	1.16
20	1.08
25	1.03
30 or more	1.00

1.5.2.2 Computations without Previous Test Records

When a concrete production facility does not have sufficient field strength test records for calculation of the standard deviation, the required average strength f'cr shall be: f'c + 1,200 psi.

1.6 STORAGE OF MATERIALS

Cement and other cementitious materials shall be stored in weathertight buildings, bins, or silos which will exclude moisture and contaminants and keep each material completely separated. Aggregate stockpiles shall be arranged and used in a manner to avoid excessive segregation and to prevent contamination with other materials or with other sizes of aggregates. Aggregate shall not be stored directly on ground unless a sacrificial layer is left undisturbed. Reinforcing bars and accessories shall be stored above the ground on platforms, skids or other supports. Other materials shall be stored in such a manner as to avoid contamination and deterioration. Admixtures which have been in storage at the project site for longer than 6 months or which have been subjected to freezing shall not be used unless retested and proven to meet the specified requirements. Materials shall be capable of being accurately identified after bundles or containers are opened.

1.7 GOVERNMENT ASSURANCE INSPECTION AND TESTING

Day-to day inspection and testing shall be the responsibility of the Contractor Quality Control (CQC) staff. However, representatives of the Contracting Officer can and will inspect construction as considered appropriate and will monitor operations of the Contractor's CQC staff. Government inspection or testing will not relieve the Contractor of any of his CQC responsibilities.

1.7.1 Materials

The Government will sample and test aggregates, cementitious materials, other materials, and concrete to determine compliance with the specifications as considered appropriate. The Contractor shall provide facilities and labor as may be necessary for procurement of representative test samples. Samples of aggregates will be obtained at the point of batching in accordance with ASTM D 75. Other materials will be sampled from storage at the jobsite or from other locations as considered appropriate. Samples may be placed in storage for later testing when appropriate.

1.7.2 Fresh Concrete

Fresh concrete will be sampled as delivered in accordance with ASTM C 172 and tested in accordance with these specifications, as considered necessary.

1.7.3 Hardened Concrete

Tests on hardened concrete will be required by the Government when such tests are considered necessary. All investigations and testing shall be performed by and at the expense of the Contractor and must be approved by the Contracting Officer, except that if all concrete is found to be in compliance

with the drawings and specifications, the cost of investigations and testing will be at the expense of the Government.

1.7.4 Inspection

Concrete operations will be tested and inspected by the Government as the project progresses. Failure to detect defective work or material will not prevent rejection later when a defect is discovered nor will it obligate the Government for final acceptance.

PART 2 - PRODUCTS

2.1 CEMENTITIOUS MATERIALS

Cementitious materials shall be portland cement, and shall conform to appropriate specifications listed below. Use of cementitious materials in concrete which will have surfaces exposed in the completed structure shall be restricted so there is no change in color, source, or type of cementitious material.

2.1.1 Portland Cement

ASTM C 150, Type I low alkali with a maximum 15 percent amount of tricalcium aluminate, or Type II low alkali.

2.1.2 Pozzolan (Fly Ash)

Pozzolan shall conform to ASTM C 618, Class F. Maximum loss on ignition shall not be over 4 percent. Samples shall be obtained, prepared, and tested in accordance with ASTM C 311. All pozzolan mixtures shall contain pozzolan in the maximum proportion of 15 percent of the total cementitious materials by absolute volume, based on the specific gravity of the portland cement and the pozzolan. Pozzolan (fly ash) will be accepted on the basis of certified test results showing that the pozzolan meets all requirements specified herein. The Contractor shall report certified test results for each mill lot of fly ash furnished. When, in the opinion of the Contracting Officer, the fly ash becomes damaged in transit or deteriorated because of age or improper storage, the fly ash proposed for use shall be sampled at the mixing site by the Contractor in the presence of a representative of the Contracting Officer and shall be tested by an independent testing laboratory for conformance with specification requirements. Fly ash being check tested shall not be used in the work prior to completion of the series of tests specified in ASTM C 311, paragraph 6.1. Fly ash failing to meet the test requirements shall be promptly removed from the site or in the case of ready mix concrete, shall be segregated at the batching plant as directed.

2.2 AGGREGATES

Aggregates shall conform to the following.

2.2.1 Fine Aggregate

Fine aggregate shall conform to the quality and gradation requirements of ASTM C 33.

2.2.2 Coarse Aggregate

Coarse aggregate shall conform to ASTM C 33, Class 5S.

2.3 CHEMICAL ADMIXTURES

Chemical admixtures, when required or permitted, shall conform to the appropriate specification listed. Admixtures shall be furnished in liquid form and of suitable concentration for easy, accurate control of dispensing.

2.3.1 Air-Entraining Admixture

ASTM C 260 and shall consistently entrain the air content in the specified ranges under field conditions.

2.3.2 Accelerating Admixture

ASTM C 494, Type C or E, except that calcium chloride or admixtures containing calcium chloride shall not be used.

2.3.3 Water-Reducing or Retarding Admixture

ASTM C 494, Type A, B, or D, except that the 6-month and 1-year compressive and flexural strength tests are waived.

2.3.4 High-Range Water Reducer

ASTM C 494, Type F or G, except that the 6-month and 1-year strength requirements are waived. The admixture shall be used only when approved in writing, such approval being contingent upon particular mixture control as described in the Contractor's Quality Control Plan and upon performance of separate mixture design studies.

2.3.5 Surface Retarder

COE CRD-C 94.

2.3.6 Other Chemical Admixtures

Chemical admixtures for use in producing flowing concrete shall comply with ASTM C 1017, Type I or II. These admixtures shall be used only when approved in writing, such approval being contingent upon particular mixture control as described in the Contractor's Quality Control Plan and upon performance of separate mixture design studies.

2.4 CURING MATERIALS

2.4.1 Impervious-Sheet

Impervious-sheet materials shall conform to ASTM C 171, type optional, except, that polyethylene sheet shall not be used.

2.4.2 Membrane-Forming Compound

Membrane-Forming curing compound shall conform to ASTM C 309, Type 1-D or 2, except that only a styrene acrylate or chlorinated rubber compound meeting Class B requirements shall be used for surfaces that are to be painted or are to receive bituminous roofing, or waterproofing, or floors that are to receive adhesive applications of resilient flooring. The curing compound selected shall be compatible with any subsequent paint, roofing, waterproofing, or flooring specified. Nonpigmented compound shall contain a fugitive dye, and shall have the reflective requirements in ASTM C 309 waived.

2.4.3 Burlap and Cotton Mat

Burlap and cotton mat used for curing shall conform to AASHTO M 182.

2.5 WATER

Water for mixing and curing shall be fresh, clean, potable, and free of injurious amounts of oil, acid, salt, or alkali, except that non-potable water may be used if it meets the requirements of COE CRD-C 400. Water containing chloride salts shall not be used.

2.6 NONSHRINK GROUT

Nonshrink grout shall conform to ASTM C 1107, and shall be a commercial formulation suitable for the proposed application.

2.7 NONSLIP SURFACING MATERIAL

Nonslip surfacing material shall consist of 55 percent, minimum, aluminum oxide or silicon-dioxide abrasive ceramically bonded together to form a homogeneous material sufficiently porous to provide a good bond with portland cement paste; or factory-graded emery aggregate consisting of not less than 45 percent aluminum oxide and 25 percent ferric oxide. The aggregate shall be well graded from particles retained on the 0.600 mm (No. 30) sieve to particles passing the 2.36 mm (No. 8) sieve.

2.8 LATEX BONDING AGENT

Latex agents for bonding fresh to hardened concrete shall conform to ASTM C 1059.

2.9 EPOXY RESIN

Epoxy resins for use in repairs shall conform to ASTM C 881, Type V, Grade 2. Class as appropriate to the existing ambient and surface temperatures.

2.10 EMBEDDED ITEMS

Embedded items shall be of the size and type indicated or as needed for the application. Dovetail slots shall be galvanized steel. Hangers for suspended ceilings shall be as specified in Section 09510 ACOUSTICAL CEILINGS. Inserts

for shelf angles and bolt hangers shall be of malleable iron or cast or wrought steel.

2.11 FLOOR HARDENER

Floor hardener shall be a colorless aqueous solution containing zinc silicofluoride, magnesium silicofluoride, or sodium silicofluoride. These silicofluorides can be used individually or in combination. Proprietary hardeners may be used if approved in writing by the Contracting Officer.

2.12 PERIMETER INSULATION

NOTE: Show required K-value on the drawings.

Perimeter insulation shall be polystyrene conforming to ASTM C 578, Type II; polyurethane conforming to ASTM C 591, Type II; or cellular glass conforming to ASTM C 552, Type I or IV.

2.13 VAPOR BARRIER

Vapor barrier shall be polyethylene sheeting with a minimum thickness of 0.15 mm (6 mils) (6 mils) or other equivalent material having a vapor permeance rating not exceeding 30 nanograms per Pascal per second per square meter (0.5 perms) (0.5 perms) as determined in accordance with ASTM E 96.

PART 3 - EXECUTION

3.1 PREPARATION FOR PLACING

Before commencing concrete placement, the following shall be performed. Surfaces to receive concrete shall be clean and free from frost, ice, mud, and water. Forms shall be in place, cleaned, coated, and adequately supported, in accordance with Section 03100 STRUCTURAL CONCRETE FORMWORK. Reinforcing steel shall be in place, cleaned, tied, and adequately supported, in accordance with Section 03200 CONCRETE REINFORCEMENT. Transporting and conveying equipment shall be in-place, ready for use, clean, and free of hardened concrete and foreign material. Equipment for consolidating concrete shall be at the placing site and in proper working order. Equipment and material for curing and for protecting concrete from weather or mechanical damage shall be at the placing site, in proper working condition and in sufficient amount for the entire placement. When hot, windy conditions during concreting appear probable, equipment and material shall be at the placing site to provide windbreaks, shading, fogging, or other action to prevent plastic shrinkage cracking or other damaging drying of the concrete. All embedded items shall be in place and clean of any deleterious substance.

3.1.1 Foundations

3.1.1.1 Concrete on Earth Foundations

Earth (subgrade, base, or subbase courses) surfaces upon which concrete is to be placed shall be clean, damp, and free from debris, frost, ice, and standing or running water. Prior to placement of concrete, the foundation shall be well drained and shall be satisfactorily graded and uniformly compacted.

3.1.2 Previously Placed Concrete

Concrete surfaces to which additional concrete is to be bonded shall be prepared for receiving the next horizontal lift by cleaning the construction joint surface with either air-water cutting, sandblasting, high-pressure water jet, or other approved method. Concrete at the side of vertical construction joints shall be prepared as approved by the Contracting Officer. Air-water cutting shall not be used on formed surfaces or surfaces congested with reinforcing steel. Regardless of the method used, the resulting surfaces shall be free from all laitance and inferior concrete so that clean surfaces of well bonded coarse aggregate are exposed and make up at least 10-percent of the surface area, distributed uniformly throughout the surface. The edges of the coarse aggregate shall not be undercut. The surface of horizontal construction joints shall be kept continuously wet for the first 12 hours during the 24-hour period prior to placing fresh concrete. The surface shall be washed completely clean as the last operation prior to placing the next lift.

3.1.2.1 Preparation of Previously Placed Concrete

Concrete surfaces to which other concrete is to be bonded shall be abraded in an approved manner that will expose sound aggregate uniformly without damaging the concrete. Laitance and loose particles shall be removed. Surfaces shall be thoroughly washed and shall be moist but without free water when concrete is placed.

3.1.3 Vapor Barrier

Vapor barrier shall be provided beneath the interior on-grade concrete floor slabs. The greatest widths and lengths practicable shall be used to eliminate joints wherever possible. Joints shall be lapped a minimum of 300 mm. (12 inches.) Torn, punctured, or damaged vapor barrier material shall be removed and new vapor barrier shall be provided prior to placing concrete. For minor repairs, patches may be made using laps of at least 300 mm. (12 inches.) Lapped joints shall be sealed and edges patched with pressure-sensitive adhesive or tape not less than 50 mm (2 inches) wide and compatible with the membrane. Vapor barrier shall be placed directly on underlying subgrade, base course, or capillary water barrier, unless it consists of crushed material or large granular material which could puncture the vapor barrier. In this case, the surface shall be choked with a light layer of sand, as approved, before placing the vapor barrier. A 50 mm (2 inch) layer of compacted, clean concrete sand (fine aggregate) shall be placed on top of the vapor barrier before placing concrete. Concrete placement shall be controlled so as to prevent damage to the vapor barrier, or any covering sand.

3.1.4 Perimeter Insulation

Perimeter insulation shall be installed at locations indicated. Adhesive shall be used where insulation is applied to the interior surface of foundation walls and may be used for exterior application.

3.1.5 Embedded Items

Before placement of concrete, care shall be taken to determine that all embedded items are firmly and securely fastened in place as indicated on the drawings, or required. Conduit and other embedded items shall be clean and free of oil and other foreign matter such as loose coatings or rust, paint, and scale. The embedding of wood in concrete will be permitted only when specifically authorized or directed. Voids in sleeves, inserts, and anchor slots shall be filled temporarily with readily removable materials to prevent the entry of concrete into voids. Welding shall not be performed on embedded metals within 600 mm (2 feet) of the surface of the concrete. Tack welding shall not be performed on or to embedded items.

3.2 TRANSPORTING CONCRETE TO PROJECT SITE

Concrete shall be transported to the placing site in truck mixers.

3.3 CONVEYING CONCRETE ON SITE

Concrete shall be conveyed from mixer or transporting unit to forms as rapidly as possible and within the time interval specified by methods which will prevent segregation or loss of ingredients using following equipment. Conveying equipment shall be cleaned before each placement.

3.3.1 Buckets

The interior hopper slope shall be not less than 58 degrees from the horizontal, the minimum dimension of the clear gate opening shall be at least 5 times the nominal maximum-size aggregate, and the area of the gate opening shall not be less than 0.2 square meters. (2 square feet.) The maximum dimension of the gate opening shall not be greater than twice the minimum dimension. The bucket gates shall be essentially grout tight when closed and may be manually, pneumatically, or hydraulically operated except that buckets larger than 1.5 cubic meters (2 cubic yards) shall not be manually operated. The design of the bucket shall provide means for positive regulation of the amount and rate of deposit of concrete in each dumping position.

3.3.2 Transfer Hoppers

Concrete may be charged into nonagitating hoppers for transfer to other conveying devices. Transfer hoppers shall be capable of receiving concrete directly from delivery vehicles and shall have conical-shaped discharge features. The transfer hopper shall be equipped with a hydraulically operated gate and with a means of external vibration to effect complete discharge. Concrete shall not be held in nonagitating transfer hoppers more than 30 minutes.

3.3.3 Trucks

Truck mixers operating at agitating speed or truck agitators used for transporting plant-mixed concrete shall conform to the requirements of ASTM C 94. Nonagitating equipment shall be used only for transporting plant-mixed concrete over a smooth road and when the hauling time is less than 15 minutes. Bodies of nonagitating equipment shall be smooth, watertight, metal containers

specifically designed to transport concrete, shaped with rounded corners to minimize segregation, and equipped with gates that will permit positive control of the discharge of the concrete.

3.3.4 Chutes

When concrete can be placed directly from a truck mixer, agitator, or nonagitating equipment, the chutes normally attached to this equipment by the manufacturer may be used. A discharge deflector shall be used when required by the Contracting Officer. Separate chutes and other similar equipment will not be permitted for conveying concrete.

3.3.5 Belt Conveyors

Belt conveyors shall be designed and operated to assure a uniform flow of concrete from mixer to final place of deposit without segregation of ingredients or loss of mortar and shall be provided with positive means, such as discharge baffle or hopper, for preventing segregation of the concrete at the transfer points and the point of placing. Belt conveyors shall be constructed such that the idler spacing shall not exceed 900 mm. (36 inches.) The belt speed shall be a minimum of 90 meters (300 feet) per minute and a maximum of 225 meters (750 feet) per minute. If concrete is to be placed through installed horizontal or sloping reinforcing bars, the conveyor shall discharge concrete into a pipe or elephant truck that is long enough to extend through the reinforcing bars.

3.3.6 Concrete Pumps

Concrete may be conveyed by positive displacement pump when approved. The pumping equipment shall be piston or squeeze pressure type; pneumatic placing equipment shall not be used. The pipeline shall be rigid steel pipe or heavy-duty flexible hose. The inside diameter of the pipe shall be at least 3 times the nominal maximum-size coarse aggregate in the concrete mixture to be pumped but not less than 100 mm. (4 inches.) Aluminum pipe shall not be used.

3.4 PLACING CONCRETE

Mixed concrete shall be discharged within 1-1/2 hours or before the mixer drum has revolved 300 revolutions, whichever comes first after the introduction of the mixing water to the cement and aggregates. When the concrete temperature exceeds 30 degrees C, (85 degrees F,) the time shall be reduced to 45 minutes. Concrete shall be placed within 15 minutes after it has been discharged from the transporting unit. Concrete shall be handled from mixer or transporting unit to forms in a continuous manner until the approved unit of operation is completed. Adequate scaffolding, ramps and walkways shall be provided so that personnel and equipment are not supported by in-place reinforcement. Placing will not be permitted when the sun, heat, wind, or limitations of facilities furnished by the Contractor prevent proper consolidation, finishing and curing. Sufficient placing capacity shall be provided so that concrete can be kept free of cold joints.

3.4.1 Depositing Concrete

Concrete shall be deposited as close as possible to its final position in the forms, and there shall be no vertical drop greater than 1.5 meters (5 feet) except where suitable equipment is provided to prevent segregation and where specifically authorized. Depositing of the concrete shall be so regulated that it will be effectively consolidated in horizontal layers not more than 300 mm (12 inches) thick, except that all slabs shall be placed in a single layer. Concrete to receive other construction shall be screeded to the proper level. Concrete shall be deposited continuously in one layer or in layers so that fresh concrete is deposited on in-place concrete that is still plastic. Fresh concrete shall not be deposited on concrete that has hardened sufficiently to cause formation of seams or planes of weakness within the section. Concrete that has surface dried, partially hardened, or contains foreign material shall not be used. When temporary spreaders are used in the forms, the spreaders shall be removed as their service becomes unnecessary. Concrete shall not be placed in slabs over columns and walls until concrete in columns and walls has been in-place at least two hours or until the concrete begins to lose its plasticity. Concrete for beams, girders, brackets, column capitals, haunches, and drop panels shall be placed at the same time as concrete for adjoining slabs.

3.4.2 Consolidation

Immediately after placing, each layer of concrete shall be consolidated by internal vibrators, except for slabs 100 mm (4 inches) thick or less. The vibrators shall at all times be adequate in effectiveness and number to properly consolidate the concrete; a spare vibrator shall be kept at the jobsite during all concrete placing operations. The vibrators shall have a frequency of not less than 10,000 vibrations per minute, an amplitude of at least 0.6 mm, (0.025 inch,) and the head diameter shall be appropriate for the structural member and the concrete mixture being placed. Vibrators shall be inserted vertically at uniform spacing over the area of placement. The distance between insertions shall be approximately 1-1/2 times the radius of action of the vibrator so that the area being vibrated will overlap the adjacent just-vibrated area by a reasonable amount. The vibrator shall penetrate rapidly to the bottom of the layer and at least 150 mm (6 inches) into the preceding layer if there is such. Vibrator shall be held stationary until the concrete is consolidated and then vertically withdrawn slowly while operating. Form vibrators shall not be used unless specifically approved and unless forms are constructed to withstand their use. Vibrators shall not be used to move concrete within the forms. Slabs 100 mm (4 inches) and less in thickness shall be consolidated by properly designed vibrating screeds or other approved technique. Excessive vibration of lightweight concrete resulting in segregation or flotation of coarse aggregate shall be prevented. Frequency and amplitude of vibrators shall be determined in accordance with COE CRD-C 521. Grate tampers ("jitterbugs") shall not be used.

3.4.3 Cold Weather Requirements

Special protection measures, conforming to ACI 306R and approved by the Contracting Officer, shall be used if freezing temperatures are anticipated before the expiration of the specified curing period. The ambient temperature of the air where concrete is to be placed and the temperature of surfaces to

receive concrete shall be not less than 5 degrees C. (40 degrees F.) The temperature of the concrete when placed shall be not less than 10 degrees C (50 degrees F) nor more than 25 degrees C. (75 degrees F.) Heating of the mixing water or aggregates will be required to regulate the concrete placing temperature. Materials entering the mixer shall be free from ice, snow, or frozen lumps. Salt, chemicals or other materials shall not be incorporated in the concrete to prevent freezing. Upon written approval, an accelerating admixture conforming to ASTM C 494, Type C or E may be used, provided it contains no calcium chloride. Calcium chloride shall not be used.

3.4.4 Hot Weather Requirements

When the ambient temperature during concrete placing is expected to exceed 30 degrees C, (85 degrees F,) the concrete shall be placed in accordance with ACI 305R and finished with procedures previously submitted and as specified herein. The concrete temperature at time of delivery to the forms shall not exceed the temperature shown in the table below when measured in accordance with ASTM C 1064. Steel forms and reinforcements shall be cooled as approved prior to concrete placement when steel temperatures are greater than 49 degrees C. (120 degrees F.) Conveying and placing equipment shall be cooled if necessary to maintain proper concrete-placing temperature. During periods of hot weather, the following precautions shall be taken to prevent the formation of plastic-shrinkage cracks resulting from excessive loss of moisture from the concrete:

a. The metal forms and/or underlying base or subgrade materials that will not be covered by vapor barrier or similar material shall be cooled by sprinkling or fogging with water immediately before the placement of concrete.

b. All concrete shall be delivered to the forms at a temperature below 30 degrees C (85 degrees F.), except that concrete with retarding admixtures may have temperatures of 30 to 33 degrees C (85 to 90 degrees F) as deposited in the forms.

c. Placement may be allowed only at night or in early morning hours if necessary to maintain the concrete temperature and keep forms cool.

d. The concrete shall be placed and finished as rapidly as practicable and curing will start immediately after final finishing has been completed on any section of a floor or placement.

e. The finished surface of the concrete shall be kept damp by applying a water fog or mist with approved spraying equipment until mats can be applied as required by the moist curing method.

f. Curing for the first 24 hours after placement shall be by the moist curing method. After this initial curing period any of the specified methods may be used for the remaining period of curing.

Maximum Allowable Concrete Placing Temperature

Relative Humidity, Percent, During Time of Concrete Placement	Maximum Allowable Concrete Temperature Degrees
Greater than or equal to 60	33 C (90 F)
Less than 60	30 C (85 F)

3.4.5 Prevention of Plastic Shrinkage Cracking

During hot weather with low humidity, and particularly with appreciable wind, as well as interior placements when space heaters produce low humidity, the Contractor shall be alert to the tendency for plastic shrinkage cracks to develop and shall institute measures to prevent this. Particular care shall be taken if plastic shrinkage cracking is potentially imminent and especially if it has developed during a previous placement. Periods of high potential for plastic shrinkage cracking can be anticipated by use of Fig. 2.1.5 of ACI 305R. In addition the concrete placement shall be further protected by erecting shades and windbreaks and by applying fog sprays of water, sprinkling, ponding or wet covering. Plastic shrinkage cracks that occur shall be filled by injection of epoxy resin as directed, after the concrete hardens. Plastic shrinkage cracks shall never be troweled over or filled with slurry.

3.4.6 Placing Concrete in Congested Areas

Special care shall be used to ensure complete filling of the forms, elimination of all voids, and complete consolidation of the concrete when placing concrete in areas congested with reinforcing bars, embedded items, waterstops and other tight spacing. An appropriate concrete mixture shall be used, and the nominal maximum size of aggregate (NMSA) shall meet the specified criteria when evaluated for the congested area. Vibrators with heads of a size appropriate for the clearances available shall be used, and the consolidation operation shall be closely supervised to ensure complete and thorough consolidation at all points. Where necessary, splices of reinforcing bars shall be alternated to reduce congestion. Where two mats of closely spaced reinforcing are required, the bars in each mat shall be placed in matching alignment to reduce congestion. Reinforcing bars may be temporarily crowded to one side during concrete placement provided they are returned to exact required location before concrete placement and consolidation are completed.

3.4.7 Placing Flowable Concrete

If a plasticizing admixture conforming to ASTM C 1017 is used or if a Type F or G high range water reducing admixture is permitted to increase the slump, the concrete shall meet all requirements of paragraph GENERAL REQUIREMENTS in PART 1. Extreme care shall be used in conveying and placing the concrete to avoid segregation. Consolidation and finishing shall meet all requirements of paragraphs Placing Concrete, Finishing Formed Surfaces, and Finishing

Unformed Surfaces. No relaxation of requirements to accommodate flowable concrete will be permitted.

3.5 FOUNDATION RIB AND FLOOR SLAB JOINTS

Joints shall be located and constructed as indicated. All foundation rib and floor slab joints shall be construction joints. This is a mandatory requirement and will not be waived. All reinforcement shall be continued across joints as indicated. Reinforcement shall be 2 inches clear form each joint.

3.5.1 Construction Joints

For concrete other than slabs on grade, construction joints shall be located so that the unit of operation does not exceed 60 feet. Concrete shall be placed continuously so that each unit is monolithic in construction. Fresh concrete shall not be placed against adjacent hardened concrete until it is at least 24 hours old. Construction joints shall be located as indicated or approved. Where concrete work is interrupted by weather, end of work shift or other similar type of delay, location and type of construction joint shall be subject to approval of the Contracting Officer. Unless otherwise indicated and except for slabs on grade, reinforcing steel shall extend through construction joints. Construction joints in slabs on grade shall be keyed or doweled as shown. Concrete columns, walls, or piers shall be in place at least 2 hours, or until the concrete begins to lose its plasticity, before placing concrete for beams, girders, or slabs thereon. In walls having door or window openings, lifts shall terminate at the top and bottom of the opening. Other lifts shall terminate at such levels as to conform to structural requirements or architectural details. Where horizontal construction joints in walls or columns are required, a strip of 25 mm (1 inch) square-edge lumber, bevelled and oiled to facilitate removal, shall be tacked to the inside of the forms at the construction joint. Concrete shall be placed to a point 25 mm (1 inch) above the underside of the strip. The strip shall be removed 1 hour after the concrete has been placed, and any irregularities in the joint line shall be leveled off with a wood float, and all laitance shall be removed. Prior to placing additional concrete, horizontal construction joints shall be prepared as specified in paragraph Previously Placed Concrete.

3.6 FINISHING FORMED SURFACES

Forms, form materials, and form construction are specified in Section 03100 STRUCTURAL CONCRETE FORMWORK. Finishing of formed surfaces shall be as specified herein. Unless another type of architectural or special finish is specified, surfaces shall be left with the texture imparted by the forms except that defective surfaces shall be repaired. Unless painting of surfaces is required, uniform color of the concrete shall be maintained by use of only one mixture without changes in materials or proportions for any structure or portion of structure that requires a Class A or B finish. Except for major defects, as defined hereinafter, surface defects shall be repaired as specified herein within 24 hours after forms are removed. Repairs of the so-called "plaster-type" (a thin finish coat of cementitious material and aggregate applied to the formed surface) will not be permitted in any location. Tolerances of formed surfaces shall conform to the requirements of

ACI 117/A117R. These tolerances apply to the finished concrete surface, not to the forms themselves; forms shall be set true to line and grade. Form tie holes requiring repair and other defects whose depth is at least as great as their surface diameter shall be repaired as specified in paragraph Damp-Pack Mortar Repair. Defects whose surface diameter is greater than their depth shall be repaired as specified in paragraph Repair of Major Defects. Repairs shall be finished flush with adjacent surfaces and with the same surface texture. The cement used for all repairs shall be a blend of job cement with white cement proportioned so that the final color after curing and aging will be the same as the adjacent concrete. Concrete with excessive honeycomb, or other defects which affect the strength of the member, will be rejected. Repairs shall be demonstrated to be acceptable and free from cracks or loose or drummy areas at the completion of the contract and, for Class A and B Finishes, shall be inconspicuous. Repairs not meeting these requirements will be rejected and shall be replaced.

3.6.1 Class C and Class D Finish

Class C finish is required where indicated on the drawings. Class D finish is required where indicated on the drawings. Fins, ravelings, and loose material shall be removed, and, except as otherwise indicated or as specified in Section 03100 STRUCTURAL CONCRETE FORMWORK, holes left by removal of form ties shall be reamed and filled. Honeycomb and other defects more than 12 mm (1/2 inch) deep or more than 50 mm (2 inches) in diameter shall be repaired. Defects more than 50 mm (2 inches) in diameter shall be cut back to sound concrete, but in all cases at least 25 mm (1 inch) deep.

3.7 REPAIRS

3.7.1 Damp-Pack Mortar Repair

Form tie holes requiring repair and other defects whose depth is at least as great as their surface diameter but not over 100 mm (4 inches) shall be repaired by the damp-pack mortar method. Form tie holes shall be reamed and other similar defects shall be cut out to sound concrete. The void shall then be thoroughly cleaned, thoroughly wetted, brush-coated with a thin coat of neat cement grout and filled with mortar. Mortar shall be a stiff mix of 1 part portland cement to 2 parts fine aggregate passing the 1.18 mm (No. 16 mesh) sieve, and minimum amount of water. Only sufficient water shall be used to produce a mortar which, when used, will stick together on being molded into a ball by a slight pressure of the hands and will not exude water but will leave the hands damp. Mortar shall be mixed and allowed to stand for 30 to 45 minutes before use with remixing performed immediately prior to use. Mortar shall be thoroughly tamped in place in thin layers using a hammer and hardwood block. Holes passing entirely through walls shall be completely filled from the inside face by forcing mortar through to the outside face. All holes shall be packed full. Damp-pack repairs shall be moist cured for at least 48 hours.

3.7.2 Repair of Major Defects

Major defects will be considered to be those more than 12 mm (1/2 inch) deep or, for Class C and D finishes, more than 50 mm (2 inches) in diameter. Also included are any defects of any kind whose depth is over 100 mm (4 inches) or

whose surface diameter is greater than their depth. Major defects shall be repaired as specified below.

3.7.2.1 Surface Application of Mortar Repair

Defective concrete shall be removed, and removal shall extend into completely sound concrete. Approved equipment and procedures which will not cause cracking or microcracking of the sound concrete shall be used. If reinforcement is encountered, concrete shall be removed so as to expose the reinforcement for at least 50 mm (2 inches) on all sides. All such defective areas greater than 7800 square mm (12 square inches) shall be outlined by saw cuts at least 25 mm (1 inch) deep. Defective areas less than 7800 square mm (12 square inches) shall be outlined by a 25 mm (1 inch) deep cut with a core drill in lieu of sawing. All saw cuts shall be straight lines in a rectangular pattern in line with the formwork panels. After concrete removal, the surface shall be thoroughly cleaned by high pressure washing to remove all loose material. Surfaces shall be kept continually saturated for the first 12 of the 24 hours immediately before placing mortar and shall be damp but not wet at the time of commencing mortar placement. The Contractor, at his option, may use either hand-placed mortar or mortar placed with a mortar gun. If hand-placed mortar is used, the edges of the cut shall be perpendicular to the surface of the concrete. The prepared area shall be brush-coated with a thin coat of neat cement grout. The repair shall then be made using a stiff mortar, preshrunk by allowing the mixed mortar to stand for 30 to 45 minutes and then remixed, thoroughly tamped into place in thin layers. If hand-placed mortar is used, the Contractor shall test each repair area for drumminess by firm tapping with a hammer and shall inspect for cracks, both in the presence of the Contracting Officer's representative, immediately before completion of the contract, and shall replace any showing drumminess or cracking. If mortar placed with a mortar gun is used, the gun shall be a small compressed air-operated gun to which the mortar is slowly hand fed and which applies the mortar to the surface as a high-pressure stream, as approved. Repairs made using shotcrete equipment will not be accepted. The mortar used shall be the same mortar as specified for damp-pack mortar repair. If gun-placed mortar is used, the edges of the cut shall be beveled toward the center at a slope of 1:1. All surface applied mortar repairs shall be continuously moist cured for at least 7 days. Moist curing shall consist of several layers of saturated burlap applied to the surface immediately after placement is complete and covered with polyethylene sheeting, all held closely in place by a sheet of plywood or similar material rigidly braced against it. Burlap shall be kept continually wet.

3.7.2.2 Repair of Deep and Large Defects

Deep and large defects will be those that are more than 150 mm (6 inches) deep and also have an average diameter at the surface more than 450 mm (18 inches) or that are otherwise so identified by the Project Office. Such defects shall be repaired as specified herein or directed, except that defects which affect the strength of the structure shall not be repaired and that portion of the structure shall be completely removed and replaced. Deep and large defects shall be repaired by procedures approved in advance including forming and placing special concrete using applied pressure during hardening. Preparation of the repair area shall be as specified for surface application of mortar. In addition, the top edge (surface) of the repair area shall be sloped at

approximately 20 degrees from the horizontal, upward toward the side from which concrete will be placed. The special concrete shall be a concrete mixture with low water content and low slump, and shall be allowed to age 30 to 60 minutes before use. Concrete containing a specified expanding admixture may be used in lieu of the above mixture; the paste portion of such concrete mixture shall be designed to have an expansion between 2.0 and 4.0 percent when tested in accordance with ASTM C 940. A full width "chimney" shall be provided at the top of the form on the placing side to ensure filling to the top of the opening. A pressure cap shall be used on the concrete in the chimney with simultaneous tightening and revibrating the form during hardening to ensure a tight fit for the repair. The form shall be removed after 24 hours and immediately the chimney shall be carefully chipped away to avoid breaking concrete out of the repair; the surface of the repair concrete shall be dressed as required.

3.7.3 Resinous and Latex Material Repair

In lieu of the portland cement based mortars specified above, an epoxy resin mortar based on epoxy resin or a mortar based on latex bonding agent may be used.

3.8 FINISHING UNFORMED SURFACES

The finish of all unformed surfaces shall meet the requirements of paragraph Tolerances in PART 1, when tested as specified herein.

3.8.1 General

The ambient temperature of spaces adjacent to unformed surfaces being finished and of the base on which concrete will be placed shall be not less than 10 degrees C. (50 degrees F.) In hot weather all requirements of paragraphs Hot Weather Requirements and Prevention of Plastic Shrinkage Cracking shall be met. Unformed surfaces that are not to be covered by additional concrete or backfill shall have a float finish, with additional finishing as specified below, and shall be true to the elevation shown on the drawings. Surfaces to receive additional concrete or backfill shall be brought to the elevation shown on the drawings, properly consolidated, and left true and regular. Unless otherwise shown on the drawings, exterior surfaces shall be sloped for drainage, as directed. Where drains are provided, interior floors shall be evenly sloped to the drains. Joints shall be carefully made with a jointing or edging tool. The finished surfaces shall be protected from stains or abrasions. Grate tampers or "jitterbugs" shall not be used for any surfaces. The dusting of surfaces with dry cement or other materials or the addition of any water during finishing shall not be permitted. If bleedwater is present prior to finishing, the excess water shall be carefully dragged off or removed by absorption with porous materials such as burlap. During finishing operations, extreme care shall be taken to prevent over finishing or working water into the surface; this can cause "crazing" (surface shrinkage cracks which appear after hardening) of the surface. Any slabs with surfaces which exhibit significant crazing shall be removed and replaced. During finishing operations, surfaces shall be checked with a 10 foot straightedge, applied in both directions at regular intervals while the concrete is still plastic, to detect high or low areas.

3.8.2 Rough Slab Finish

As a first finishing operation for unformed surfaces and as final finish for slabs to receive mortar setting beds, the surface shall receive a rough slab finish prepared as follows. Areas indicated on the drawings shall receive only a rough slab finish. The concrete shall be uniformly placed across the slab area, consolidated as previously specified, and then screeded with straightedge strikeoffs immediately after consolidation to bring the surface to the required finish level with no coarse aggregate visible. Side forms and screed rails shall be provided, rigidly supported, and set to exact line and grade. Allowable tolerances for finished surfaces apply only to the hardened concrete, not to forms or screed rails. Forms and screed rails shall be set true to line and grade. "Wet screeds" shall not be used.

3.8.3 Floated Finish

Slabs to receive more than a rough slab finish shall next be given a wood float finish. Areas as indicated on the drawings shall be given only a float finish. The screeding shall be followed immediately by darbying or bull floating before bleeding water is present, to bring the surface to a true, even plane. Then, after the concrete has stiffened so that it will withstand a man's weight without imprint of more than 6 mm (1/4 inch) and the water sheen has disappeared, it shall be floated to a true and even plane free of ridges. Floating shall be performed by use of suitable hand floats or power driven equipment. Sufficient pressure shall be used on the floats to bring a film of moisture to the surface. Hand floats shall be made of wood, magnesium, or aluminum. Lightweight concrete or concrete that exhibits stickiness shall be floated with a magnesium float. Care shall be taken to prevent over-finishing or incorporating water into the surface.

3.8.4 Troweled Finish

All interior floor slabs, except those to be finished with ceramic tile, shall be given a trowel finish. After floating is complete and after the surface moisture has disappeared, unformed surfaces shall be steel-troweled to a smooth, even, dense finish, free from blemishes including trowel marks. In lieu of hand finishing, an approved power finishing machine may be used in accordance with the directions of the machine manufacturer. Care shall be taken to prevent blistering and if such occurs, troweling shall immediately be stopped and operations and surfaces corrected. A final hard steel troweling shall be done by hand, with the trowel tipped, and using hard pressure, when the surface is at a point that the trowel will produce a ringing sound. The finished surface shall be thoroughly consolidated and shall be essentially free of trowel marks and be uniform in texture and appearance. The concrete mixture used for troweled finished areas shall be adjusted, if necessary, in order to provide sufficient fines (cementitious material and fine sand) to finish properly.

3.9 Non-Slip Finish

Non-slip floors shall be constructed in accordance with the following subparagraphs.

3.9.0.1 Broomed

Unless otherwise noted, all exterior exposed slabs shall be given a broomed finish. After floating, the surface shall be lightly steel troweled, and then carefully scored by pulling a coarse fiber push-type broom across the surface. Brooming shall be transverse to traffic or at right angles to the slope of the slab. After the end of the curing period, the surface shall be vigorously broomed with a coarse fiber broom to remove all loose or semi-detached particles.

3.10 CURING AND PROTECTION

3.10.1 General

Concrete shall be cured by an approved method for the period of time given below:

Concrete with Type III cement	3 days
All other concrete	7 days

Immediately after placement, concrete shall be protected from premature drying, extremes in temperatures, rapid temperature change, mechanical injury and damage from rain and flowing water for the duration of the curing period. Air and forms in contact with concrete shall be maintained at a temperature above 10 degrees C (50 degrees F) for the first 3 days and at a temperature above 0 degrees C (32 degrees F) for the remainder of the specified curing period. Exhaust fumes from combustion heating units shall be vented to the outside of the enclosure, and heaters and ducts shall be placed and directed so as not to cause areas of overheating and drying of concrete surfaces or to create fire hazards. Materials and equipment needed for adequate curing and protection shall be available and at the site prior to placing concrete. No fire or excessive heat, including welding, shall be permitted near or in direct contact with the concrete at any time. Except as otherwise permitted by paragraph Membrane Forming Curing Compounds, moist curing shall be provided for any areas to receive floor hardener, any paint or other applied coating, or to which other concrete is to be bonded. Concrete containing silica fume shall be initially cured by fog misting during finishing, followed immediately by continuous moist curing. Except for plastic coated burlap, impervious sheeting alone shall not be used for curing.

3.10.2 Moist Curing

Concrete to be moist-cured shall be maintained continuously wet for the entire curing period, commencing immediately after finishing. If water or curing materials used stain or discolor concrete surfaces which are to be permanently exposed, the concrete surfaces shall be cleaned as approved. When wooden forms are left in place during curing, they shall be kept wet at all times. If steel forms are used in hot weather, nonsupporting vertical forms shall be broken loose from the concrete soon after the concrete hardens and curing water continually applied in this void. If the forms are removed before the end of the curing period, curing shall be carried out as on unformed surfaces, using suitable materials. Surfaces shall be cured by ponding, by continuous sprinkling, by continuously saturated burlap or cotton mats, or by continuously saturated plastic coated burlap. Burlap and mats shall be clean

and free from any contamination and shall be completely saturated before being placed on the concrete. The Contractor shall have an approved work system to ensure that moist curing is continuous 24 hours per day.

3.10.3 Membrane Forming Curing Compounds

Membrane curing shall not be used on surfaces that are to receive any subsequent treatment depending on adhesion or bonding to the concrete, including surfaces to which a smooth finish is to be applied or other concrete to be bonded. However, a styrene acrylate or chlorinated rubber compound meeting ASTM C 309, Class B requirements, may be used for surfaces which are to be painted or are to receive bituminous roofing or waterproofing, or floors that are to receive adhesive applications of resilient flooring. The curing compound selected shall be compatible with any subsequent paint, roofing, waterproofing or flooring specified. Membrane curing compound shall not be used on surfaces that are maintained at curing temperatures with free steam. Curing compound shall be applied to formed surfaces immediately after the forms are removed and prior to any patching or other surface treatment except the cleaning of loose sand, mortar, and debris from the surface. All surfaces shall be thoroughly moistened with water. Curing compound shall be applied to slab surfaces as soon as the bleeding water has disappeared, with the tops of joints being temporarily sealed to prevent entry of the compound and to prevent moisture loss during the curing period. The curing compound shall be applied in a two-coat continuous operation by approved motorized power-spraying equipment operating at a minimum pressure of 500 kPa, (75 psi,) at a uniform coverage of not more than 10 cubic meters per L (400 square feet per gallon) for each coat, and the second coat shall be applied perpendicular to the first coat. Concrete surfaces which have been subjected to rainfall within 3 hours after curing compound has been applied shall be resprayed by the method and at the coverage specified. Surfaces on which clear compound is used shall be shaded from direct rays of the sun for the first 3 days. Surfaces coated with curing compound shall be kept free of foot and vehicular traffic, and from other sources of abrasion and contamination during the curing period.

3.10.4 Impervious Sheeting

Impervious-sheet curing shall only be used on horizontal or nearly horizontal surfaces. Surfaces shall be thoroughly wetted and be completely covered with the sheeting. Sheeting shall be at least 450 mm (18 inches) wider than the concrete surface to be covered. Covering shall be laid with light-colored side up. Covering shall be lapped not less than 300 mm (12 inches) and securely weighted down or shall be lapped not less than 100 mm (4 inches) and taped to form a continuous cover with completely closed joints. The sheet shall be weighted to prevent displacement so that it remains in contact with the concrete during the specified length of curing. Coverings shall be folded down over exposed edges of slabs and secured by approved means. Sheets shall be immediately repaired or replaced if tears or holes appear during the curing period.

3.10.5 Cold Weather Curing and Protection

When the daily ambient low temperature is less than 0 degrees C (32 degrees F) the temperature of the concrete shall be maintained above 5 degrees C (40

degrees F) for the first seven days after placing. During the period of protection removal, the air temperature adjacent to the concrete surfaces shall be controlled so that concrete near the surface will not be subjected to a temperature differential of more than 13 degrees C (25 degrees F) as determined by suitable temperature measuring devices furnished by the Government, as required, and installed adjacent to the concrete surface and 50 mm (2 inches) inside the surface of the concrete. The installation of the thermometers shall be made by the Contractor as directed.

3.11 SETTING BASE PLATES AND BEARING PLATES

After being properly positioned, column base plates, bearing plates for beams and similar structural members, and machinery and equipment base plates shall be set to the proper line and elevation with nonshrink grout . The thickness of the grout shall be as indicated on the drawings Concrete and metal surfaces in contact with grout shall be clean and free of oil and grease, and concrete surfaces in contact with grout shall be damp and free of laitance when grout is placed.

3.11.1 Nonshrink Grout

Nonshrink grout shall be a ready-mixed material requiring only the addition of water. Water content shall be the minimum that will provide a flowable mixture and completely fill the space to be grouted without segregation, bleeding, or reduction of strength.

3.11.1.1 Mixing and Placing of Nonshrink Grout

Mixing and placing shall be in conformance with the material manufacturer's instructions and as specified therein. Ingredients shall be thoroughly dry-mixed before adding water. After adding water, the batch shall be mixed for 3 minutes. Batches shall be of size to allow continuous placement of freshly mixed grout. Grout not used within 30 minutes after mixing shall be discarded. The space between the top of the concrete or machinery-bearing surface and the plate shall be filled solid with the grout. Forms shall be of wood or other equally suitable material for completely retaining the grout on all sides and on top and shall be removed after the grout has set. The placed grout shall be carefully worked by rodding or other means to eliminate voids; however, overworking and breakdown of the initial set shall be avoided. Grout shall not be retempered or subjected to vibration from any source. Where clearances are unusually small, placement shall be under pressure with a grout pump. Temperature of the grout, and of surfaces receiving the grout, shall be maintained at 18 to 30 degrees C (65 to 85 degrees F) until after setting.

3.11.1.2 Treatment of Exposed Surfaces

For metal-oxidizing nonshrink grout, exposed surfaces shall be cut back 25 mm (1 inch) and immediately covered with a parge coat of mortar consisting of 1 part portland cement and 2-1/2 parts fine aggregate by weight, with sufficient water to make a plastic mixture. The parge coat shall have a smooth finish. For other mortars or grouts, exposed surfaces shall have a smooth-dense finish and be left untreated. Curing shall comply with paragraph CURING AND PROTECTION.

3.12 TESTING AND INSPECTION FOR CONTRACTOR QUALITY CONTROL

The Contractor shall perform the inspection and tests described below and, based upon the results of these inspections and tests, shall take the action required and shall submit specified reports. When, in the opinion of the Contracting Officer, the concreting operation is out of control, concrete placement shall cease and the operation shall be corrected. The laboratory performing the tests shall conform with ASTM C 1077. Materials may be subjected to check testing by the Government from samples obtained at the manufacturer, at transfer points, or at the project site. The Government will inspect the laboratory, equipment, and test procedures prior to start of concreting operations and at least once per 6 months thereafter for conformance with ASTM C 1077.

3.12.1 Grading and Corrective Action

3.12.1.1 Fine Aggregate

At least twice per week in which concrete is being delivered, there shall be one sieve analysis and fineness modulus determination in accordance with ASTM C 136 and COE CRD-C 104 for the fine aggregate or for each fine aggregate if it is batched in more than one size or classification. The location at which samples are taken may be selected by the Contractor as the most advantageous for control. However, the Contractor is responsible for delivering fine aggregate to the mixer within specification limits. When the amount passing on any sieve is outside the specification limits, the fine aggregate shall be immediately resampled and retested. If there is another failure on any sieve, the fact shall immediately reported to the Contracting Officer, concreting shall be stopped, and immediate steps taken to correct the grading.

3.12.1.2 Coarse Aggregate

At least twice per week in which concrete is being delivered, there shall be a sieve analysis in accordance with ASTM C 136 for each size of coarse aggregate. The location at which samples are taken may be selected by the Contractor as the most advantageous for production control. However, the Contractor shall be responsible for delivering the aggregate to the mixer within specification limits. A test record of samples of aggregate taken at the same locations shall show the results of the current test as well as the average results of the five most recent tests including the current test. The Contractor may adopt limits for control coarser than the specification limits for samples taken other than as delivered to the mixer to allow for degradation during handling. When the amount passing any sieve is outside the specification limits, the coarse aggregate shall be immediately resampled and retested. If the second sample fails on any sieve, that fact shall be reported to the Contracting Officer. Where two consecutive averages of 5 tests are outside specification limits, the operation shall be considered out of control and shall be reported to the Contracting Officer. Concreting shall be stopped and immediate steps shall be taken to correct the grading.

3.12.2 Quality of Aggregates

Thirty days prior to the start of concrete placement, the Contractor shall perform all tests for aggregate quality required by ASTM C 33. In addition,

after the start of concrete placement, the Contractor shall perform tests for aggregate quality at least every three months, and when the source of aggregate or aggregate quality changes. Samples tested after the start of concrete placement shall be taken immediately prior to entering the concrete mixer.

3.12.3 Scales, Batching and Recording

The accuracy of the scales shall be checked by test weights prior to start of concrete operations and at least once every three months. Such tests shall also be made as directed whenever there are variations in properties of the fresh concrete that could result from batching errors. Once a week the accuracy of each batching and recording device shall be checked during a weighing operation by noting and recording the required weight, recorded weight, and the actual weight batched. At the same time, the Contractor shall test and ensure that the devices for dispensing admixtures are operating properly and accurately. When either the weighing accuracy or batching accuracy does not comply with specification requirements, the plant shall not be operated until necessary adjustments or repairs have been made. Discrepancies in recording accuracies shall be corrected immediately.

3.12.4 Batch-Plant Control

The measurement of concrete materials including cementitious materials, each size of aggregate, water, and admixtures shall be continuously controlled. The aggregate weights and amount of added water shall be adjusted as necessary to compensate for free moisture in the aggregates. The amount of air-entraining agent shall be adjusted to control air content within specified limits. A report shall be prepared indicating type and source of cement used, type and source of pozzolan used, amount and source of admixtures used, aggregate source, the required aggregate and water weights per cubic meter, (cubic yard,) amount of water as free moisture in each size of aggregate, and the batch aggregate and water weights per cubic meter (cubic yard) for each class of concrete batched during each day's plant operation.

3.12.5 Concrete Mixture

a. Air Content Testing. Air content tests shall be made when test specimens are fabricated. At least one test for air content for each 38 cubic meters (50 c.y.), or fraction thereof, of concrete shall be made on each class of concrete during concrete production. Additional tests shall be made when excessive variation in workability is reported by the placing foreman or Government inspector. Tests shall be made in accordance with ASTM C 231 for normal weight concrete . Test results shall be plotted on control charts which shall at all times be readily available to the Government and shall be submitted weekly. Copies of the current control charts shall be kept in the field by testing crews and results plotted as tests are made. When a single test result reaches either the upper or lower action limit, a second test shall immediately be made. The results of the two tests shall be averaged and this average used as the air content of the batch to plot on both the air content and the control chart for range, and for determining need for any remedial action. The result of each test, or average as noted in the previous sentence, shall be plotted on a separate control chart for each mixture on which an "average line" is set at the midpoint of the specified air content

range from paragraph Air Entrainment. An upper warning limit and a lower warning limit line shall be set 1.0 percentage point above and below the average line, respectively. An upper action limit and a lower action limit line shall be set 1.5 percentage points above and below the average line, respectively. The range between each two consecutive tests shall be plotted on a secondary control chart for range where an upper warning limit is set at 2.0 percentage points and an upper action limit is set at 3.0 percentage points. Samples for air content may be taken at the mixer, however, the Contractor is responsible for delivering the concrete to the placement site at the stipulated air content. If the Contractor's materials or transportation methods cause air content loss between the mixer and the placement, correlation samples shall be taken at the placement site as required by the Contracting Officer, and the air content at the mixer controlled as directed.

b. Air Content Corrective Action. Whenever points on the control chart for percent air reach either warning limit, an adjustment shall immediately be made in the amount of air-entraining admixture batched. As soon as practical after each adjustment, another test shall be made to verify the result of the adjustment. Whenever a point on the secondary control chart for range reaches the warning limit, the admixture dispenser shall be recalibrated to ensure that it is operating accurately and with good reproducibility. Whenever a point on either control chart reaches an action limit line, the air content shall be considered out of control and the concreting operation shall immediately be halted until the air content is under control. Additional air content tests shall be made when concreting is restarted.

c. Slump Testing. As a minimum, at least one slump test for every 38 cubic meters (50 c.y.), or fraction thereof, of concrete shall be made of each mixture of concrete during each day's concrete production, in accordance with ASTM C 143. See paragraph, "Strength Specimens." Also, additional tests shall be made when excessive variation in workability is reported by the placing foreman or Government inspector. Test results shall be plotted on control charts which shall at all times be readily available to the Government and shall be submitted weekly. Copies of the current control charts shall be kept in the field by testing crews and results plotted as tests are made. When a single slump test reaches or goes beyond either the upper or lower action limit, a second test shall immediately be made. The results of the two tests shall be averaged and this average used as the slump of the batch to plot on both the control charts for slump and the chart for range, and for determining need for any remedial action. Limits shall be set on separate control charts for slump for each type of mixture. The upper warning limit shall be set at 12.5 mm (1/2 inch) below the maximum allowable slump specified in paragraph Slump in PART 1 for each type of concrete and an upper action limit line and lower action limit line shall be set at the maximum and minimum allowable slumps, respectively, as specified in the same paragraph. The range between each consecutive slump test for each type of mixture shall be plotted on a single control chart for range on which an upper action limit is set at 50 mm. (2 inches.) Samples for slump shall be taken at the mixer. However, the Contractor is responsible for delivering the concrete to the placement site at the stipulated slump. If the Contractor's materials or transportation methods cause slump loss between the mixer and the placement, correlation samples shall be taken at the placement site as required by the Contracting Officer, and the slump at the mixer controlled as directed.

d. Slump Corrective Action. Whenever points on the control charts for slump reach the upper warning limit, an adjustment shall immediately be made in the batch weights of water and fine aggregate. The adjustments are to be made so that the total water content does not exceed that amount allowed by the maximum w/c ratio specified, based on aggregates which are in a saturated surface dry condition. When a single slump reaches the upper or lower action limit, no further concrete shall be delivered to the placing site until proper adjustments have been made. Immediately after each adjustment, another test shall be made to verify the correctness of the adjustment. Whenever two consecutive individual slump tests, made during a period when there was no adjustment of batch weights, produce a point on the control chart for range at or above the upper action limit, the concreting operation shall immediately be halted, and the Contractor shall take appropriate steps to bring the slump under control. Additional slump tests shall be made as directed.

e. Temperature. The temperature of the concrete shall be measured when compressive strength specimens are fabricated. Measurement shall be in accordance with ASTM C 1064. The temperature shall be reported along with the compressive strength data.

f. Strength Specimens. The Contractor shall make test specimens for compressive or flexural strength, as appropriate. Concrete specimens shall be made immediately after discharge from the mixer and all test specimens shall be made from the same sample of concrete. At least one set of test specimens shall be made for each different concrete mixture placed per shift of Contractor or subcontractor concrete production operations, and it shall not be less than one for the first 38 cubic meters (50 c.y.) of concrete placed, then one for each 75 cubic meters (100 c.y.), or fraction thereof. The Contractor shall cast extra specimens for strength determination when required for form removal approval. A set of test specimens for concrete with a 28-day specified strength per paragraph "Strength Requirements" in PART 1 shall consist of four specimens, one to be tested at 7 days and two at 28 days and one held in reserve for future testing, if necessary. A set of flexural test specimens shall consist of six beams, one to be tested at 7 days, two to be tested at 28 days, two to be tested at 90 days and one held in reserve for future testing. If extra specimens were cast for verifying strength for form removal approval, they may be tested as required. Test specimens shall be molded and cured in accordance with ASTM C 31 and tested in accordance with ASTM C 39 for test cylinders and ASTM C 78 for test beams. Each strength specimen set shall also be tested for slump and air content. Additional sets of test specimens shall be made, as directed by the Contracting Officer, when inconsistencies, variations or loss of control of mixtures occur, or when low strengths have been detected, at no additional cost to the Government. A truly random (not haphazard) sampling plan shall be developed by the Contractor and approved by the Contracting Officer prior to the start of construction. The plan shall assure that sampling is done in a completely random and unbiased manner. Results of all strength tests shall be reported immediately to the Contracting Officer. Quality control charts shall be kept for individual strength "tests", ("test" as defined in paragraph Strength Requirements in PART 1) moving average of last 3 "tests" for strength, and moving average for range for the last 3 "tests" for each mixture. The charts shall be similar to those found in ACI 214.3R. Charts shall be submitted weekly and shall be readily available to the Government at all times.

3.12.6 Inspection Before Placing

Foundations, construction joints, forms, and embedded items shall be inspected by the Contractor in sufficient time prior to each concrete placement in order to certify to the Contracting Officer that they are ready to receive concrete. The results of each inspection shall be reported in writing.

3.12.7 Placing

The placing foreman shall supervise placing operations, shall determine that the correct quality of concrete or grout is placed in each location as specified and as directed by the Contracting Officer, and shall be responsible for measuring and recording concrete temperatures and ambient temperature hourly during placing operations, weather conditions, time of placement, volume placed, and method of placement. The placing foreman shall not permit batching and placing to begin until it has been verified that an adequate number of vibrators in working order and with competent operators are available. Placing shall not be continued if any pile of concrete is inadequately consolidated. If any batch of concrete fails to meet the temperature requirements, immediate steps shall be taken to improve temperature controls.

3.12.8 Vibrators

The frequency and amplitude of each vibrator shall be determined in accordance with COE CRD-C 521 prior to initial use and at least once a month when concrete is being placed. Additional tests shall be made as directed when a vibrator does not appear to be adequately consolidating the concrete. The frequency shall be determined while the vibrator is operating in concrete with the tachometer being held against the upper end of the vibrator head while almost submerged and just before the vibrator is withdrawn from the concrete. The amplitude shall be determined with the head vibrating in air. Two measurements shall be taken, one near the tip and another near the upper end of the vibrator head, and these results averaged. The make, model, type, and size of the vibrator and frequency and amplitude results shall be reported in writing. Any vibrator not meeting the requirements of paragraph Consolidation, shall be immediately removed from service and repaired or replaced.

3.12.9 Curing Inspection

a. Moist Curing Inspections. At least once each shift, and not less than twice per day on both work and non-work days, an inspection shall be made of all areas subject to moist curing. The surface moisture condition shall be noted and recorded.

b. Moist Curing Corrective Action. When a daily inspection report lists an area of inadequate curing, immediate corrective action shall be taken, and the required curing period for those areas shall be extended by 1 day.

c. Membrane Curing Inspection. No curing compound shall be applied until the Contractor has verified that the compound is properly mixed and ready for spraying. At the end of each operation, the Contractor shall estimate the quantity of compound used by measurement of the container and the area of

concrete surface covered, shall compute the rate of coverage in square meters per Liter, (square feet per gallon,) and shall note whether or not coverage is uniform.

d. Membrane Curing Corrective Action. When the coverage rate of the curing compound is less than that specified or when the coverage is not uniform, the entire surface shall be sprayed again.

e. Sheet Curing Inspection. At least once each shift and once per day on non-work days, an inspection shall be made of all areas being cured using impervious sheets. The condition of the covering and the tightness of the laps and tapes shall be noted and recorded.

f. Sheet Curing Corrective Action. When a daily inspection report lists any tears, holes, or laps or joints that are not completely closed, the tears and holes shall promptly be repaired or the sheets replaced, the joints closed, and the required curing period for those areas shall be extended by 1 day.

3.12.10 Cold-Weather Protection

At least once each shift and once per day on non-work days, an inspection shall be made of all areas subject to cold-weather protection. Any deficiencies shall be noted, corrected, and reported.

3.12.11 Mixer Uniformity

a. Stationary Mixers. Prior to the start of concrete placing and once every 6 months when concrete is being placed, uniformity of concrete mixing shall be determined in accordance with ASTM C 94.

b. Truck Mixers. Prior to the start of concrete placing and at least once every 6 months when concrete is being placed, uniformity of concrete mixing shall be determined in accordance with ASTM C 94. The truck mixers shall be selected randomly for testing. When satisfactory performance is found in one truck mixer, the performance of mixers of substantially the same design and condition of the blades may be regarded as satisfactory.

c. Mixer Uniformity Corrective Action. When a mixer fails to meet mixer uniformity requirements, either the mixing time shall be increased, batching sequence changed, batch size reduced, or adjustments shall be made to the mixer until compliance is achieved.

3.12.12 Reports

All results of tests or inspections conducted shall be reported informally as they are completed and in writing daily. A weekly report shall be prepared for the updating of control charts covering the entire period from the start of the construction season through the current week. During periods of cold-weather protection, reports of pertinent temperatures shall be made daily. These requirements do not relieve the Contractor of the obligation to report certain failures immediately as required in preceding paragraphs. Such reports of failures and the action taken shall be confirmed in writing in the

routine reports. The Contracting Officer has the right to examine all contractor quality control records.

- - o 0 o - -

SECTION 04200

MASONRY

PART 1 - GENERAL

1.1 REFERENCES

The publications listed below form a part of this specification to the extent referenced. The publications are referred to in the text by basic designation only.

AMERICAN CONCRETE INSTITUTE (ACI)

ACI SP-66	(1988) ACI Detailing Manual

AMERICAN SOCIETY FOR TESTING AND MATERIALS (ASTM)

ASTM A 82	(1990a) Steel Wire, Plain, for Concrete Reinforcement
ASTM A 153	(1982; R 1987) Zinc Coating (Hot-Dip) on Iron and Steel Hardware
ASTM A 615	(1993) Deformed and Plain Billet-Steel Bars for Concrete Reinforcement
ASTM C 90	(1993) Load-Bearing Concrete Masonry Units
ASTM C 150	(1992) Standard Specification for Portland Cement
ASTM C 129	(1993) Non-Load-Bearing Concrete Masonry Units
ASTM C 140	(1991) Sampling and Testing Concrete Masonry Units
ASTM C 270	(1992a) Mortar for Unit Masonry
ASTM C 476	(1991) Grout for Masonry
ASTM C 494	(1992) Chemical Admixtures for Concrete
ASTM C 780	(1991) Preconstruction and Construction Evaluation of Mortars for Plain and Reinforced Unit Masonry
ASTM C 1019	(1989a; R 1993) Sampling and Testing Grout
ASTM C 1072	(1993) Measurement of Masonry Flexural Bond Strength
ASTM D 2240	(1991) Rubber Property - Durometer Hardness

ASTM D 2287	(1992) Nonrigid Vinyl Chloride Polymer and Copolymer Molding and Extrusion Compounds
ASTM E 447	(1992b) Compressive Strength of Masonry Prisms

1.2 SUBMITTALS

Government approval is required for submittals with a "GA" designation; submittals having an "FIO" designation are for information only. The following shall be submitted in accordance with Section 01330 - SUBMITTAL PROCEDURES:

SD-01 Data

Prefaced Concrete Masonry Units; FIO.

Insulation; GA.

Manufacturer's descriptive data.

SD-04 Drawings

Masonry Work; FIO.

Drawings showing the location and layout of glass block units. Drawings including plans, elevations, and details of wall reinforcement; details of reinforcing bars at corners and wall intersections; offsets; tops, bottoms, and ends of walls; control and expansion joints; and wall openings. Bar splice locations shall be shown. Bent bars shall be identified on a bending diagram and shall be referenced and located on the drawings. Wall dimensions, bar clearances, and wall openings greater than one masonry unit in area shall be shown. No approval will be given to the shop drawings until the Contractor certifies that all openings, including those for mechanical and electrical service, are shown. If, during construction, additional masonry openings are required, the approved shop drawings shall be resubmitted with the additional openings shown along with the proposed changes. Location of these additional openings shall be clearly highlighted. The minimum scale for wall elevations shall be 1/4 inch per foot. Reinforcement bending details shall conform to the requirements of ACI SP-66.

SD-08 Statements

Cold Weather Installation; GA.

Cold weather construction procedures.

SD-09 Reports

Efflorescence Test; GA.

Field Testing of Mortar; GA.

Field Testing of Grout; GA.

Fire-rated CMU; GA.

Test reports from an approved independent laboratory. Test reports on a previously tested material shall be certified as the same as that proposed for use in this project.

SD-13 Certificates

Concrete Masonry Units (CMU); FIO.

Prefaced Concrete Masonry Units; FIO.

Control Joint Keys; FIO.

Anchors, Ties, and Bar Positioners; FIO.

Expansion-Joint Materials; FIO.

Joint Reinforcement; FIO.

Reinforcing Steel Bars and Rods; FIO.

Mortar Admixtures; FIO.

Certificates of compliance stating that the materials meet the specified requirements.

Insulation; FIO.

Certificate attesting that the polyurethane or polyisocyanurate insulation furnished for the project contains recovered material, and showing an estimated percent of such recovered material.

SD-14 Samples

Concrete Masonry Units (CMU); FIO.

Prefaced Concrete Masonry Units; FIO.

1.3 SAMPLE MASONRY PANELS

After material samples are approved and prior to starting masonry work, sample masonry panels shall be constructed for each type and color of masonry required. At least 48 hours prior to constructing the sample panel or panels, the Contractor shall submit written notification to the Contracting Officer's Representative. Sample panels shall not be built in, or as part of the structure, but shall be located where directed.

1.3.1 Configuration

Panels shall be L-shaped or otherwise configured to represent all of the wall elements. Panels shall be of the size necessary to demonstrate the acceptable level of workmanship for each type of masonry represented on the project. The minimum size of a straight panel or a leg of an L-shaped panel shall be 8 feet long 4 feet high.

1.3.2 Composition

Panels shall show full color range, texture, and bond pattern of the masonry work. The Contractor's method for mortar joint tooling; grouting of reinforced vertical cores, collar joints, bond beams, and lintels; positioning, securing, and lapping of reinforcing steel; positioning and lapping of joint reinforcement (including prefabricated corners); and cleaning of masonry work shall be demonstrated during the construction of the panels. Installation or application procedures for anchors, wall ties, glass block units, CMU control joints, brick expansion joints, insulation, flashing, brick soldier, row lock courses and weepholes shall be shown in the sample panels. The panels shall contain a masonry bonded corner . Panels that represent reinforced masonry shall contain a 2 foot by 2 foot opening placed at least 2 feet above the panel base and 2 feet away from all free edges, corners, and control joints. Required reinforcing shall be provided around this opening as well as at wall corners and control joints.

1.3.3 Construction Method

Where anchored veneer walls are required, the Contractor shall demonstrate and receive approval for the method of construction; i.e., either bring up the two wythes together or separately, with the insulation and appropriate ties placed within the specified tolerances across the cavity. Temporary provisions shall be demonstrated to preclude mortar or grout droppings in the cavity and to provide a clear open air space of the dimensions shown on the drawings. Where masonry is to be grouted, the Contractor shall demonstrate and receive approval on the method that will be used to bring up the masonry wythes; support the reinforcing bars; and grout cells, bond beams, lintels, and collar joints using the requirements specified herein. If sealer is specified to be applied to the masonry units, sealer shall be applied to the sample panels. Panels shall be built on a properly designed concrete foundation.

1.3.4 Usage

The completed panels shall be used as the standard of workmanship for the type of masonry represented. Masonry work shall not commence until the sample panel for that type of masonry construction has been completed and approved. Panels shall be protected from the weather and construction operations until the masonry work has been completed and approved. After completion of the work, the sample panels, including all foundation concrete, shall become the property of the Contractor and shall be removed from the construction site.

1.4 DELIVERY, HANDLING, AND STORAGE

Materials shall be delivered, handled, stored, and protected to avoid chipping, breakage, and contact with soil or contaminating material.

1.4.1 Masonry Units

Concrete masonry units shall be covered or protected from inclement weather and shall conform to the moisture content as specified in ASTM C 90 when delivered to the jobsite. In addition, glass block units and prefaced concrete units shall be stored with their finish surfaces covered.

Prefabricated lintels shall be marked on top sides to show either the lintel schedule number or the number and size of top and bottom bars.

1.4.2 Reinforcement, Anchors, and Ties

Steel reinforcing bars, coated anchors, ties, and joint reinforcement shall be stored above the ground. Steel reinforcing bars and uncoated ties shall be free of loose mill scale and rust.

1.4.3 Cementitious Materials, Sand and Aggregates

Cementitious and other packaged materials shall be delivered in unopened containers, plainly marked and labeled with manufacturers' names and brands. Cementitious material shall be stored in dry, weathertight enclosures or be completely covered. Cement shall be handled in a manner that will prevent the inclusion of foreign materials and damage by water or dampness. Sand and aggregates shall be stored in a manner to prevent contamination or segregation.

PART 2 - PRODUCTS

2.1 GENERAL REQUIREMENTS

The source of materials which will affect the appearance of the finished work shall not be changed after the work has started except with Contracting Officer's approval.

2.2 CEMENT

2.2.1 Portland Cement

ASTM C150, Type I, II, including requirements for low alkali cement. Cement shall be of one brand.

2.2.2 Masonry Cement is not permitted.

2.3 CONCRETE MASONRY UNITS (CMU)

Hollow and solid concrete masonry units shall conform to ASTM C 90, Type I. Cement shall have a low alkali content and be of one brand. All exterior above grade concrete masonry units shall be integral water repellant type. Integral water repellant shall be a liquid polymeric admixture.

2.3.1 Kinds and Shapes

Units shall be modular in size and shall include closer, jamb, header, lintel, and bond beam units and special shapes and sizes to complete the work as indicated. In exposed interior masonry surfaces, units having a bullnose shall be used for vertical external corners except at door, window, and louver jambs. Radius of the bullnose shall be 1 inch. Units used in exposed masonry surfaces in any one building shall have a uniform fine to medium texture and a uniform color.

2.3.2 Fire-Rated CMU

Concrete masonry units used in fire-rated construction shown on the drawings shall be of minimum equivalent thickness for the fire rating indicated and the corresponding type of aggregates indicated in TABLE I. Units containing more than one of the aggregates listed in TABLE I will be rated on the aggregate requiring the greater minimum equivalent thickness to produce the required fire rating.

TABLE I
FIRE-RATED CONCRETE MASONRY UNIT
See note (a) below

Minimum equivalent thickness
in inches for fire rating of:

Aggregate Type	4 hours	3 hours	2 hours
Pumice, scoria	4.7	4.0	3.0
Expanded slag	5.0	4.2	3.3
Expanded clay, shale, or slate	5.7	4.8	3.7
Limestone, cinders or unexpanded slag	5.9	5.0	4.0
Calcareous gravel	6.2	5.3	4.2
Siliceous gravel	6.7	5.7	4.5

(a) Minimum equivalent thickness shall equal net volume as determined in conformance with ASTM C 140 divided by the product of the actual length and height of the face shell of the unit in inches. Where walls are to receive plaster or be faced with brick, or otherwise form an assembly; the thickness of plaster or brick or other material in the assembly will be included in determining the equivalent thickness.

2.4 PREFACED CONCRETE MASONRY UNITS

Prefaced concrete masonry units shall conform to ASTM C 744 using masonry units conforming to ASTM C 90, Type 1. The facing shall turn over the edges and ends of the unit at least 3/8 inch in the direction of the thickness of the unit to form a lip at least 1/16 inch thick. Variation in color and texture shall not exceed that of the approved samples. All shapes and sizes shall be provided for a complete installation. Bullnose units shall be used along sills and caps and at vertical external corners including door jambs, window jambs, and other such openings. Radius of the bullnose shall be 1 inch. Base units shall be coved to meet finished floor surfaces where ceramic tile floor occurs.

2.5 MORTAR

Mortar shall be Type S in accordance with the proportion specification of ASTM C 270 except Type S cement-lime mortar proportions shall be 1 part cement, 1/2 part lime and 4-1/2 parts aggregate. Evaluation of performance shall be based on ASTM C 780 and ASTM C 1072. Mortar for prefaced concrete masonry unit wainscots shall contain aggregates with 100 percent passing the No. 8 sieve and 95 percent passing the No. 16 sieve. Pointing mortar in showers and kitchens shall contain ammonium stearate, or aluminum tri-stearate, or calcium stearate in an amount equal to 3 percent by weight of cement used. Cement shall have a low alkali content and be of one brand. Aggregates shall be from one source.

2.5.1 Admixtures

The mortar shall contain the manufacturer's recommended amount of liquid polymeric integral water repellant mortar admixture for water repellancy and assure proper bond strength. Follow manufacturer's instructions pertaining to critical temperatures for mixing mortar with integral water repellant admixture. In cold weather, a non-chloride based accelerating admixture may be used subject to approval. Accelerating admixture shall be non-corrosive, shall contain less than 0.2 percent chlorides, shall conform to ASTM C 494, Type C and be compatible with the water repellant admixture.

2.6 GROUT

Grout shall conform to ASTM C 476. Cement used in grout shall have a low alkali content. Grout slump shall be between 8 and 10 inches. Grout shall be used subject to the limitations of Table III. Proportions shall not be changed and materials with different physical or chemical characteristics shall not be used in grout for the work unless additional evidence is furnished that the grout meets the specified requirements.

2.6.1 Admixtures

In cold weather, a non-chloride based accelerating admixture may be used subject to approval. Accelerating admixture shall be non-corrosive, shall contain less than 0.2 percent chlorides, and shall conform to ASTM C 494, Type C.

2.6.2 Grout Barriers

Grout barriers for vertical cores shall consist of fine mesh wire, fiberglass, or expanded metal.

2.7 ANCHORS, TIES, AND BAR POSITIONERS

Anchors and ties shall be fabricated without drips or crimps and shall be zinc-coated in accordance with ASTM A 153, Class B-2. Steel wire used for anchors and ties shall be fabricated from steel wire conforming to ASTM A 82. Anchors and ties shall be sized to provide a minimum of 5/8 inch mortar cover from either face.

2.7.1 Wall Ties

Wall ties shall be rectangular-shaped or Z-shaped fabricated of 3/16 inch diameter zinc-coated steel wire. Rectangular wall ties shall be no less than 4 inches wide. Wall ties may also be of a continuous type conforming to paragraph JOINT REINFORCEMENT. Adjustable type wall ties shall not be used. Vertical spacing shall be 16 inches on center and horizontal spacing shall be 24 inches on center.

2.7.2 Dovetail Anchors

Dovetail anchors shall be of the flexible wire type, 3/16 inchdiameter zinc-coated steel wire, triangular shaped, and attached to a 12 gauge or heavier steel dovetail section. These anchors shall be used for anchorage of veneer wythes or composite-wall facings extending over the face of concrete columns, beams, or walls. Cells within vertical planes of these anchors shall be filled solid with grout for full height of walls or partitions, or solid units may be used. Dovetail slots are specified in Section 03300 CAST-IN-PLACE STRUCTURAL CONCRETE.

2.7.3 Bar Positioners

Bar positioners, used to prevent displacement of reinforcing bars during the course of construction, shall be factory fabricated from 9 gauge steel wire or equivalent, and coated with a hot-dip galvanized finish. Not more than one wire shall cross the cell.

2.8 JOINT REINFORCEMENT

Joint reinforcement shall be factory fabricated from steel wire conforming to ASTM A 82, welded construction. Tack welding will not be acceptable in reinforcement used for wall ties. Wire shall have zinc coating conforming to ASTM A 153, class B-2. All wires shall be a minimum of 9 gauge. Reinforcement shall be ladder type design, having one longitudinal wire in the mortar bed of each face shell for hollow units and one wire for solid units. Joint reinforcement shall be placed so as to ensure a minimum of 5/8 inch cover from either face. The distance between crosswires shall not exceed [16 inches. Joint reinforcement for straight runs shall be furnished in flat sections not less than 10 feet long. Joint reinforcement shall be provided with factory formed corners and intersections. If approved for use, joint reinforcement may be furnished with adjustable wall tie features.

2.9 REINFORCING STEEL BARS AND RODS

Reinforcing steel bars and rods shall conform to ASTM A 615, Grade 60.

2.10 CONTROL JOINT KEYS

Control joint keys shall be a factory fabricated solid section of natural or synthetic rubber (or combination thereof) conforming to ASTM D 2000 or polyvinyl chloride conforming to ASTM D 2287. The material shall be resistant to oils and solvents. The control joint key shall be provided with a solid shear section not less than 5/8 inch thick and 3/8 inch thick flanges, with a tolerance of plus or minus 1/16 inch. The control joint key shall fit neatly,

but without forcing, in masonry unit jamb sash grooves. The control joint key shall be flexible at a temperature of minus 30 degrees F after five hours exposure, and shall have a durometer hardness of not less than 70 when tested in accordance with ASTM D 2240.

2.11 EXPANSION-JOINT MATERIALS

Backer rod and sealant shall be adequate to accommodate joint compression equal to 50 percent of the width of the joint. The backer rod shall be compressible rod stock of polyethylene foam, polyurethane foam, butyl rubber foam, or other flexible, nonabsorptive material as recommended by the sealant manufacturer. Sealant shall conform to Section 07920 JOINT SEALING.

2.12 INSULATION

Rigid board-type insulation shall be extruded polystyrene, polyurethane, or polyisocyanurate. Polystyrene shall conform to ASTM C 578. Polyurethane or polyisocyanurate shall conform to FS HH-I-1972/1 Class 2, faced with aluminum foil on both sides of the foam. The insulation shall be a standard product and shall be marked with not less than the manufacturer's trademark or name, the specification number, the permeance and R-values. Cell insulation shall be Korfill Block, Standard U-shaped insulation as manufactured by Concrete Block Insulation Systems, Inc., or equal.

2.12.0.1 Insulation Thickness and Air Space

The cavity space shall allow for a maximum insulation thickness and air space thickness as indicated on the drawings.

2.12.0.2 Aged R-Value

The insulation shall provide a minimum aged R-value of 2 (11) for the overall thickness. The aged R-value shall be determined at 75 degrees F in accordance with the appropriate referenced specification. The stated R-value of the insulation shall be certified by an independent testing laboratory or certified by an independent Registered Professional Engineer if tests are conducted in the manufacturer's laboratory.

2.12.0.3 Recovered Material

Insulation shall contain the highest practicable percentage of recovered material derived from solid waste (but material reused in the manufacturing process cannot be counted toward the percentage of recovered material). Where two materials have the same price and performance, the one containing the higher recovered material content shall be provided. The polyurethane or polyisocyanurate foam shall have a minimum recovered material content of 9 percent by weight of the core material.

2.12.1 Insulation Adhesive

Insulation adhesive shall be specifically prepared to adhere the insulation to the masonry dampproofing and, where applicable, to the thru-wall flashing. The adhesive shall not deleteriously affect the insulation or dampproofing,

and shall have a record of satisfactory and proven performance for the conditions under which to be used.

2.13 FLASHING

Flashing shall be as specified in Section 07600 SHEET METALWORK, GENERAL.

PART 3 - EXECUTION

3.1 ENVIRONMENTAL REQUIREMENTS

3.1.1 Hot Weather Installation

The following precautions shall be taken if masonry is erected when the ambient air temperature is more than 99 degrees F in the shade and the relative humidity is less than 50 percent. All masonry materials shall be shaded from direct sunlight; mortar beds shall be spread no more than 4 feet ahead of masonry; masonry units shall be set within one minute of spreading mortar; and after erection, masonry shall be protected from direct exposure to wind and sun for 48 hours.

3.1.2 Cold Weather Installation

Before erecting masonry when ambient temperature or mean daily air temperature falls below 40 degrees F, a written statement of proposed cold weather construction procedures shall be submitted for approval. The following precautions shall be taken during all cold weather erection.

3.1.2.1 Preparation

Ice or snow formed on the masonry bed shall be thawed by the application of heat. Heat shall be applied carefully until the top surface of the masonry is dry to the touch. Sections of masonry deemed frozen and damaged shall be removed before continuing construction of those sections.

a. Air Temperature 40 to 32 Degrees F. Sand or mixing water shall be heated to produce mortar temperatures between 40 degrees F and 120 degrees F.

b. Air Temperature 32 to 25 Degrees F. Sand and mixing water shall be heated to produce mortar temperatures between [40 degrees F and 120 degrees F. Temperature of mortar on boards shall be maintained above freezing.

c. Air Temperature 25 to 20 Degrees F. Sand and mixing water shall be heated to provide mortar temperatures between 40 degrees F and 120 degrees F. Temperature of mortar on boards shall be maintained above freezing. Sources of heat shall be used on both sides of walls under construction. Windbreaks shall be employed when wind is in excess of [15 mph.

d. Air Temperature 20 Degrees F and below. Sand and mixing water shall be heated to provide mortar temperatures between 40 degrees F and 120 degrees F. Enclosure and auxiliary heat shall be provided to maintain air temperature above 32 degrees F. Temperature of units when laid shall not be less than [20 degrees F.

3.1.2.2 Completed Masonry and Masonry Not Being Worked On

a. Mean daily air temperature 40 degrees F to 32 degrees F. Masonry shall be protected from rain or snow for 24 hours by covering with weather-resistive membrane.

b. Mean daily air temperature 32 degrees F to 25 degrees F. Masonry shall be completely covered with weather-resistant membrane for 24 hours.

c. Mean Daily Air Temperature 25 Degrees F to 20 Degrees F. Masonry shall be completely covered with insulating blankets or equally protected for 24 hours.

d. Mean Daily Temperature 20 Degrees F and Below. Masonry temperature shall be maintained above 32 degrees F for 24 hours by enclosure and supplementary heat, by electric heating blankets, infrared heat lamps, or other approved methods.

3.2 LAYING MASONRY UNITS

Masonry units shall be laid in running bond pattern. Facing courses shall be level with back-up courses, unless the use of adjustable ties has been approved in which case the tolerances shall be plus or minus 1/2 inch. Each unit shall be adjusted to its final position while mortar is still soft and plastic. Units that have been disturbed after the mortar has stiffened shall be removed, cleaned, and relaid with fresh mortar. Air spaces, cavities, chases, expansion joints, and spaces to be grouted shall be kept free from mortar and other debris. Units used in exposed masonry surfaces shall be free from chipped edges or other imperfections detracting from the appearance of the finished work. Vertical joints shall be kept plumb. Units being laid and surfaces to receive units shall be free of water film and frost. Solid units shall be laid in a nonfurrowed full bed of mortar. Mortar for veneer wythes shall be beveled and sloped toward the center of the wythe from the cavity side. Units shall be shoved into place so that the vertical joints are tight. Vertical joints of brick and the vertical face shells of concrete masonry units, except where indicated at control, expansion, and isolation joints, shall be completely filled with mortar. Mortar will be permitted to protrude up to 1/2 inch into the space or cells to be grouted. Means shall be provided to prevent mortar from dropping into the space below. In double wythe construction, the inner wythe may be brought up not more than [16 inches ahead of the outer wythe. Collar joints shall be filled with mortar or grout during the laying of the facing wythe, and filling shall not lag the laying of the facing wythe by more than 8 inches.

3.2.1 Surface Preparation

Surfaces upon which masonry is placed shall be cleaned of laitance, dust, dirt, oil, organic matter, or other foreign materials and shall be slightly roughened to provide a surface texture with a depth of at least 1/8 inch. Sandblasting shall be used, if necessary, to remove laitance from pores and to expose the aggregate.

3.2.2 Forms and Shores

Forms and shores shall be sufficiently rigid to prevent deflections which may result in cracking or other damage to supported masonry and sufficiently tight to prevent leakage of mortar and grout. Supporting forms and shores shall not be removed in less than 10 days.

3.2.3 Concrete Masonry Units

Units in piers, pilasters, columns, starting courses on footings, solid foundation walls, lintels, and beams, and where cells are to be filled with grout shall be full bedded in mortar under both face shells and webs. Other units shall be full bedded under both face shells. Head joints shall be filled solidly with mortar for a distance in from the face of the unit not less than the thickness of the face shell. Foundation walls below grade shall be grouted solid. Jamb units shall be of the shapes and sizes to conform with wall units. Solid units may be incorporated in the masonry work where necessary to fill out at corners, gable slopes, and elsewhere as approved. Double walls shall be stiffened at wall-mounted plumbing fixtures by use of strap anchors, two above each fixture and two below each fixture, located to avoid pipe runs, and extending from center to center of the double wall. Walls and partitions shall be adequately reinforced for support of wall-hung plumbing fixtures when chair carriers are not specified.

3.2.4 Tolerances

Masonry shall be laid plumb, true to line, with courses level. Bond pattern shall be kept plumb throughout. Corners shall be square unless noted otherwise. Except for walls constructed of prefaced concrete masonry units,masonry shall be laid within the following tolerances (plus or minus unless otherwise noted):

TABLE II
TOLERANCES

Variation from the plumb in the lines and surfaces of columns, walls and arises	
In adjacent masonry units	1/8 inch
In 10 feet	1/4 inch
In 20 feet	3/8 inch
In 40 feet or more	1/2 inch
Variations from the plumb for external corners, expansion joints, and other conspicuous lines	
In 20 feet	1/4 inch
In 40 feet or more	1/2 inch
Variations from the level for exposed lintels, sills, parapets, horizontal grooves, and other conspicuous lines	
In 20 feet	1/4 inch
In 40 feet or more	1/2 inch
Variation from level for bed joints and top surfaces of bearing walls	
In 10 feet	1/4 inch
In 40 feet or more	1/2 inch
Variations from horizontal lines	
In 10 feet	1/4 inch
In 20 feet	3/8 inch
In 40 feet or more	1/2 inch
Variations in cross sectional dimensions of columns and in thickness of walls	
Minus	1/4 inch
Plus	1/2 inch

3.2.5 Cutting and Fitting

Full units of the proper size shall be used wherever possible, in lieu of cut units. Cutting and fitting, including that required to accommodate the work of others, shall be done by masonry mechanics using power masonry saws. Concrete masonry units may be wet or dry cut, except exterior integral color

units shall not be wet cut. Wet cut units, before being placed in the work, shall be dried to the same surface-dry appearance as uncut units being laid in the wall. Cut edges shall be clean, true and sharp. Openings in the masonry shall be made carefully so that wall plates, cover plates or escutcheons required by the installation will completely conceal the openings and will have bottoms parallel with the masonry bed joints. Reinforced masonry lintels shall be provided above openings over 12 inches wide for pipes, ducts, cable trays, and other wall penetrations, unless steel sleeves are used.

3.2.6 Jointing

Joints shall be tooled when the mortar is thumbprint hard. Horizontal joints shall be tooled last. Joints shall be brushed to remove all loose and excess mortar. Mortar joints shall be finished as follows:

3.2.6.1 Flush Joints

Joints in concealed masonry surfaces and joints at electrical outlet boxes in wet areas shall be flush cut. Flush cut joints shall be made by cutting off the mortar flush with the face of the wall. Joints in unparged masonry walls below grade shall be pointed tight. Flush joints for architectural units, such as fluted units, shall completely fill both the head and bed joints.

3.2.6.2 Tooled Joints

Joints in exposed exterior and interior masonry surfaces shall be tooled slightly concave. Joints shall be tooled with a jointer slightly larger than the joint width so that complete contact is made along the edges of the unit. Tooling shall be performed so that the mortar is compressed and the joint surface is sealed. Jointer of sufficient length shall be used to obtain a straight and true mortar joint.

3.2.6.3 Door and Window Frame Joints

On the exposed interior side of exterior frames, joints between frames and abutting masonry walls shall be raked to a depth of 3/8 inch. On the exterior side of exterior frames, joints between frames and abutting masonry walls shall be raked to a depth of [3/8 inch.

3.2.7 Joint Widths

Joint widths shall be as follows:

3.2.7.1 Concrete Masonry Units

Concrete masonry units shall have 3/8 inch joints, except for prefaced concrete masonry units.

3.2.8 Embedded Items

Spaces around built-in items shall be filled with mortar. Openings around flush-mount electrical outlet boxes in wet locations shall be pointed with mortar. Anchors, ties, wall plugs, accessories, flashing, pipe sleeves and other items required to be built-in shall be embedded as the masonry work

progresses. Anchors, ties and joint reinforcement shall be fully embedded in the mortar. Cells receiving anchor bolts and cells of the first course below bearing plates shall be filled with grout.

3.2.9 Unfinished Work

Unfinished work shall be stepped back for joining with new work. Toothing may be resorted to only when specifically approved. Loose mortar shall be removed and the exposed joints shall be thoroughly cleaned before laying new work.

3.2.10 Masonry Wall Intersections

Each course shall be masonry bonded at corners and elsewhere as shown. Masonry walls shall be anchored or tied together at corners and intersections with bond beam reinforcement and prefabricated corner or tee pieces of joint reinforcement as shown.

3.2.11 Partitions

Partitions shall be continuous from floor to underside of floor or roof deck where shown. Openings in firewalls around joists or other structural members shall be filled as indicated or approved. Where suspended ceilings on both sides of partitions are indicated, the partitions other than those shown to be continuous may be stopped approximately 4 inches above the ceiling level. An isolation joint shall be placed in the intersection between partitions and structural or exterior walls as shown. Interior partitions having 4 inch nominal thick units shall be tied to intersecting partitions of 4 inch units, 5 inches into partitions of 6 inchunits, and [7 inches8 inch or thicker units. Cells within vertical plane of ties shall be filled solid with grout for full height of partition or solid masonry units may be used. Interior partitions having masonry walls over 4 inchesthick shall be tied together with joint reinforcement. Partitions containing joint reinforcement shall be provided with prefabricated pieces at corners and intersections or partitions.

3.3 ANCHORED VENEER CONSTRUCTION

The inner and outer wythes shall be completely separated by a continuous airspace as shown on the drawings. Both the inner and the outer wythes shall be laid up together except when adjustable joint reinforcement assemblies are approved for use or when dampproofing or board-type insulation is installed

3.4 DAMPROOFING BOARD-TYPE INSULATION INSTALLATION

Masonry units to receive dampproofingandboard-type insulation shall be free from chipped edges, protrusions, cracks, or other imperfections which could interfere with installed system. Joint reinforcement, anchors, and ties shall be kept clean of dampproofing, moisture, and other foreign matter when the outer wythe is laid. Insulation shall be kept dry prior to, during, and after insulation. The cavity between the wythes shall not be filled with loose fill insulation.

3.5 WEEP HOLES

Weep holes shall be provided not more than 24 inches on centers in mortar joints of the exterior wythe above wall flashing, over foundations, bond beams, and any other horizontal interruptions of the cavity. Weep holes shall be formed by placing short lengths of well-greased No. 10, 5/16 inch nominal diameter, braided cotton sash cord in the mortar and withdrawing the cords after the wall has been completed. Other approved methods may be used for providing weep holes. Weep holes shall be kept free of mortar and other obstructions.

3.6 COMPOSITE WALLS

Masonry wythes shall be tied together with joint reinforcement or with unit wall ties. Facing shall be anchored to concrete backing with wire dovetail anchors set in slots built in the face of the concrete as specified in Section 03300 CAST-IN-PLACE STRUCTURAL CONCRETE. The facing wythe shall be anchored or tied to the backup at a maximum spacing of 16 inches on center vertically and 24 inches on center horizontally. Unit ties shall be spaced not over 24 inches on centers horizontally, in courses not over 16 inches apart vertically, staggered in alternate courses. Ties shall be laid not closer than 5/8 inchto either masonry face. Ties shall not extend through control joints. Collar joints between masonry facing and masonry backup shall be filled solidly with grout.

3.7 MORTAR

Mortar shall be mixed in a mechanically operated mortar mixer for at least 3 minutes, but not more than 5 minutes. Measurement of ingredients for mortar shall be by volume. Ingredients not in containers, such as sand, shall be accurately measured by the use of measuring boxes. Water shall be mixed with the dry ingredients in sufficient amount to provide a workable mixture which will adhere to the vertical surfaces of masonry units. Mortar that has stiffened because of loss of water through evaporation shall be retempered by adding water to restore the proper consistency and workability. Mortar that has reached its initial set or that has not been used within 2-1/2 hours after mixing shall be discarded.

3.8 REINFORCING STEEL

Reinforcement shall be cleaned of loose, flaky rust, scale, grease, mortar, grout, or other coating which might destroy or reduce its bond prior to placing grout. Bars with kinks or bends not shown on the drawings shall not be used. Reinforcement shall be placed prior to grouting. Unless otherwise indicated, vertical wall reinforcement shall extend to within 2 inchesof tops of walls.

3.8.1 Positioning Bars

Vertical bars shall be accurately placed within the cells at the positions indicated on the drawings. A minimum clearance of 1/2 inch shall be maintained between the bars and masonry units. Minimum clearance between parallel bars shall be one diameter of the reinforcement. Vertical reinforcing may be held in place using bar positioners located near the ends of each bar

and at intermediate intervals of not more than 192 diameters of the reinforcement. Column and pilaster ties shall be wired in position around the vertical steel. Ties shall be in contact with the vertical reinforcement and shall not be placed in horizontal bed joints.

3.8.2 Splices

Bars shall be lapped a minimum of 48 diameters of the reinforcement. Welded or mechanical connections shall develop at least 125 percent of the specified yield strength of the reinforcement.

3.9 JOINT REINFORCEMENT

Joint reinforcement shall be installed at 16 inches on center or as indicated. Reinforcement shall be lapped not less than 6 inches. Prefabricated sections shall be installed at corners and wall intersections. The longitudinal wires of joint reinforcement shall be placed to provide not less than 5/8 inch cover to either face of the unit.

3.10 PLACING GROUT

Cells containing reinforcing bars shall be filled with grout. Hollow masonry units in walls or partitions supporting plumbing, heating, or other mechanical fixtures, voids at door and window jambs, and other indicated spaces shall be filled solid with grout. Cells under lintel bearings on each side of openings shall be filled solid with grout for full height of openings. Walls below grade, lintels, and bond beams shall be filled solid with grout. Units other than open end units may require grouting each course to preclude voids in the units. Grout not in place within 1-1/2 hours after water is first added to the batch shall be discarded. Sufficient time shall be allowed between grout lifts to preclude displacement or cracking of face shells of masonry units. If blowouts, flowouts, misalignment, or cracking of face shells should occur during construction, the wall shall be torn down and rebuilt.

3.10.1 Vertical Grout Barriers for Fully Grouted Walls

Grout barriers shall be provided not more than 30 feet apart, or as required, to limit the horizontal flow of grout for each pour.

3.10.2 Horizontal Grout Barriers

Grout barriers shall be embedded in mortar below cells of hollow units receiving grout.

3.10.3 Grout Holes and Cleanouts

3.10.3.1 Grout Holes

Grouting holes shall be provided in slabs, spandrel beams, and other in-place overhead construction. Holes shall be located over vertical reinforcing bars or as required to facilitate grout fill in bond beams. Additional openings spaced not more than 16 inches on centers shall be provided where grouting of all hollow unit masonry is indicated. Openings shall not be less than 4 inches in diameter or 3 by 4 inches in horizontal dimensions. Upon completion

of grouting operations, grouting holes shall be plugged and finished to match surrounding surfaces.

3.10.3.2 Cleanouts for Hollow Unit Masonry Construction

Cleanout holes shall be provided at the bottom of every pour in cores containing vertical reinforcement when the height of the grout pour exceeds 5 feet. Where all cells are to be grouted, cleanout courses shall be constructed using bond beam units in an inverted position to permit cleaning of all cells. Cleanout holes shall be provided at a maximum spacing of 32 inches where all cells are to be filled with grout. A new series of cleanouts shall be established if grouting operations are stopped for more than 4 hours. Cleanouts shall not be less than 3 by 4 inch openings cut from one face shell. Manufacturer's standard cutout units may be used at the Contractor's option. Cleanout holes shall not be closed until masonry work, reinforcement, and final cleaning of the grout spaces have been completed and inspected. For walls which will be exposed to view, cleanout holes shall be closed in an approved manner to match surrounding masonry.

3.10.4 Grouting Equipment

3.10.4.1 Grout Pumps

Pumping through aluminum tubes will not be permitted. Pumps shall be operated to produce a continuous stream of grout without air pockets, segregation, or contamination. Upon completion of each day's pumping, waste materials and debris shall be removed from the equipment, and disposed of outside the masonry.

3.10.4.2 Vibrators

Internal vibrators shall maintain a speed of not less than 5,000 impulses per minute when submerged in the grout. At least one spare vibrator shall be maintained at the site at all times. Vibrators shall be applied at uniformly spaced points not further apart than the visible effectiveness of the machine. Duration of vibration shall be limited to time necessary to produce satisfactory consolidation without causing segregation.

3.10.5 Grout Placement

Masonry shall be laid to the top of a pour before placing grout. Grout shall not be placed in two-wythe solid unit masonry cavity until mortar joints have set for at least 3 days during hot weather and 5 days during cold damp weather. Grout shall not be placed in hollow unit masonry until mortar joints have set for at least 24 hours. Grout shall be placed using a hand bucket, concrete hopper, or grout pump to completely fill the grout spaces without segregation of the aggregates. Vibrators shall not be inserted into lower pours that are in a semi-solidified state. The height of grout pours and type of grout used shall be limited by the dimensions of grout spaces as indicated in Table III. Low-lift grout methods may be used on pours up to and including 5 feet in height. High-lift grout methods shall be used on pours exceeding 5 feet in height.

3.10.5.1 Low-Lift Method

Grout shall be placed at a rate that will not cause displacement of the masonry due to hydrostatic pressure of the grout. Mortar protruding more than 1/2 inch into the grout space shall be removed before beginning the grouting operation. Grout pours 12 inches or less in height shall be consolidated by mechanical vibration or by puddling. Grout pours over 12 inches in height shall be consolidated by mechanical vibration and reconsolidated by mechanical vibration after initial water loss and settlement has occurred. Vibrators shall not be inserted into lower pours that are in a semi-solidified state. Low-lift grout shall be used subject to the limitations of Table III.

3.10.5.2 High-Lift Method

Mortar droppings shall be cleaned from the bottom of the grout space and from reinforcing steel. Mortar protruding more than 1/4 inch into the grout space shall be removed by dislodging the projections with a rod or stick as the work progresses. Reinforcing, bolts, and embedded connections shall be rigidly held in position before grouting is started. CMU units shall not be pre-wetted. Grout, from the mixer to the point of deposit in the grout space shall be placed as rapidly as practical by pumping and placing methods which will prevent segregation of the mix and cause a minimum of grout splatter on reinforcing and masonry surfaces not being immediately encased in the grout lift. The individual lifts of grout shall be limited to 4 feet in height. The first lift of grout shall be placed to a uniform height within the pour section and vibrated thoroughly to fill all voids. This first vibration shall follow immediately behind the pouring of the grout using an approved mechanical vibrator. After a waiting period sufficient to permit the grout to become plastic, but before it has taken any set, the succeeding lift shall be poured and vibrated 12 to 18 inches into the preceding lift. If the placing of the succeeding lift is going to be delayed beyond the period of workability of the preceding, each lift shall be reconsolidated by reworking with a second vibrator as soon as the grout has taken its settlement shrinkage. The waiting, pouring, and reconsolidation steps shall be repeated until the top of the pour is reached. The top lift shall be reconsolidated after the required waiting period. The high-lift grouting of any section of wall between vertical grout barriers shall be completed to the top of a pour in one working day unless a new series of cleanout holes is established and the resulting horizontal construction joint cleaned. High-lift grout shall be used subject to the limitations in Table III.

TABLE III
POUR HEIGHT AND TYPE OF GROUT FOR VARIOUS GROUT SPACE DIMENSIONS

Maximum Grout Pour Height (feet) (4)	Grout Type	Grouting Procedure	Minimum Dimensions of the Total Clear Areas Within Grout Spaces and Cells (in.) (1,2) Multiwythe Masonry (3)	Hollow-unit Masonry
1	Fine	Low Lift	3/4	1-1/2 x 2
5	Fine	Low Lift	2	2 x 3
8	Fine	High Lift	2	2 x 3
12	Fine	High Lift	2-1/2	2-1/2 x 3
24	Fine	High Lift	3	3 x 3
1	Coarse	Low Lift	1-1/2	1-1/2 x 3
5	Coarse	Low Lift	2	2-1/2 x 3
8	Coarse	High Lift	2	3 x 3
12	Coarse	High Lift	2-1/2	3 x 3
24	Coarse	High Lift	3	3 x 4]

Notes:

(1) The actual grout space or cell dimension must be larger than the sum of the following items:

a) The required minimum dimensions of total clear areas given in the table above;
b) The width of any mortar projections within the space;
c) The horizontal projections of the diameters of the horizontal reinforcing bars within a cross section of the grout space or cell.

(2) The minimum dimensions of the total clear areas shall be made up of one or more open areas, with at least one area being 3/4 inchor greater in width.

(3) For grouting spaces between masonry wythes.

(4) Where only cells of hollow masonry units containing reinforcement are grouted, the maximum height of the pour shall not exceed the distance between horizontal bond beams.

3.11 BOND BEAMS

Bond beams shall consist of concrete masonry knock out bond beam units. Bond beams shall be filled with grout and reinforced as indicated on the drawings. Grout barriers shall be installed under bond beam units to retain the grout as required. Reinforcement shall be continuous, including around corners, except through control joints or expansion joints, unless otherwise indicated on the drawings. Where splices are required for continuity, reinforcement shall be lapped 48 bar diameters. A minimum clearance of 1/2 inch shall be maintained between reinforcement and interior faces of units.

3.12 CONTROL JOINTS

Control joints shall be provided as indicated and shall be constructed by using special control-joint units or sash jamb units with control joint key in accordance with the details shown on the drawings. Sash jamb units shall have a 3/4 by 3/4 inch groove near the center at end of each unit. The vertical mortar joint at control joint locations shall be continuous, including through all bond beams. This shall be accomplished by utilizing half blocks in alternating courses on each side of the joint. The control joint key shall be interrupted in courses containing continuous bond beam steel. In single wythe exterior masonry walls, the exterior control joints shall be raked to a depth of 3/4 inch; backer rod and sealant shall be installed in accordance with Section 07920 JOINT SEALING. Exposed interior control joints shall be raked to a depth of 1/4 inch. Concealed control joints shall be flush cut.

3.13 SHELF ANGLES

Shelf angles shall be adjusted as required to keep the masonry level and at the proper elevation. Shelf angles shall be galvanized. Shelf angles shall be provided in sections not longer than 10 feet and installed with a 1/4 inch gap between sections. Shelf angles shall be mitered and welded at building corners with each angle not shorter than 4 feet, unless limited by wall configuration.

3.14 LINTELS

3.14.1 Masonry Lintels

Masonry lintels shall be constructed with lintel units filled solid with grout in all courses and reinforced with a minimum of two No. 4 bars in the bottom course unless otherwise indicated on the drawings. Lintel reinforcement shall extend beyond each side of masonry opening 40 bar diameters or 24 inches, whichever is greater. Reinforcing bars shall be supported in place prior to grouting and shall be located 1/2 inch above the bottom inside surface of the lintel unit.

3.15 SILLS AND COPINGS

Sills and copings shall be set in a full bed of mortar with faces plumb and true.

3.16 ANCHORAGE TO CONCRETE AND STRUCTURAL STEEL

3.16.1 Anchorage to Concrete

Anchorage of masonry to the face of concrete columns, beams, or walls shall be with dovetail anchors spaced not over 16 inches on centers vertically and 24 inches on center horizontally.

3.17 INSULATION

Anchored veneer walls shall be insulated, where shown, by installing board-type insulation on the cavity side of the inner wythe. Board type insulation shall be applied directly to the dampproofed masonry or thru-wall

flashing with adhesive. Insulation shall be neatly fitted between obstructions without impaling of insulation on ties or anchors. The insulation shall be applied in parallel courses with vertical joints breaking midway over the course below and shall be applied in moderate contact with adjoining units without forcing, and shall be cut to fit neatly against adjoining surfaces.

3.18 SPLASH BLOCKS

Splash blocks shall be located as shown.

3.19 POINTING AND CLEANING

After mortar joints have attained their initial set, but prior to hardening, mortar and grout daubs or splashings shall be completely removed from masonry-unit surfaces that will be exposed or painted, or dampproofed and insulated. Before completion of the work, defects in joints of masonry to be exposed or painted shall be raked out as necessary, filled with mortar, and tooled to match existing joints. Immediately after grout work is completed, scum and stains which have percolated through the masonry work shall be removed using a high pressure stream of water and a stiff bristled brush. Masonry surfaces shall not be cleaned, other than removing excess surface mortar, until mortar in joints has hardened. Masonry surfaces shall be left clean, free of mortar daubs, dirt, stain, and discoloration, including scum from cleaning operations, and with tight mortar joints throughout. Metal tools and metal brushes shall not be used for cleaning.

3.19.1 Concrete Masonry Unit

Exposed concrete masonry unit and concrete brick surfaces shall be dry-brushed at the end of each day's work and after any required pointing, using stiff-fiber bristled brushes.

3.19 BEARING PLATES

Bearing plates for beams, joists, joist girders and similar structural members shall be set to the proper line and elevation with damp-pack bedding mortar, or set fully into wet non shrink wall grout as indicated on the drawings. Bedding mortar and non-shrink grout shall be as specified in Section 03300 CAST-IN-PLACE STRUCTURAL CONCRETE.

3.20 PROTECTION

Facing materials shall be protected against staining. Top of walls shall be covered with nonstaining waterproof covering or membrane when work is not in progress. Covering of the top of the unfinished walls shall continue until the wall is waterproofed with a complete roof or parapet system. Covering shall extend a minimum of 2 feet down on each side of the wall and shall be held securely in place. Before starting or resuming, the top surface of masonry in place shall be cleaned of loose mortar and foreign material.

3.21 TEST REPORTS

3.21.1 Field Testing of Mortar

At least three specimens of mortar shall be taken each day. A layer of mortar 1/2 to 5/8 inch thick shall be spread on the masonry units and allowed to stand for one minute. The specimens shall then be prepared and tested for compressive strength in accordance with ASTM C 780.

3.21.2 Field Testing of Grout

Field sampling and testing of grout shall be in accordance with the applicable provisions of ASTM C 1019. A minimum of three specimens of grout per day shall be sampled and tested. Each specimen shall have a minimum ultimate compressive strength of 2000 psi at 28 days.

3.21.3 Efflorescence Test

Brick which will be exposed to weathering shall be tested for efflorescence. Tests shall be scheduled far enough in advance of starting masonry work to permit retesting if necessary. Sampling and testing shall conform to the applicable provisions of ASTM C 67. Units meeting the definition of "effloresced" will be subjected to rejection.

- - o 0 o - -

SECTION 05055 - WELDING, STRUCTURAL

PART 1 - GENERAL

1.1 REFERENCES

The publications listed below form a part of this specification to the extent referenced. The publications are referred to in the text by basic designation only.

AMERICAN INSTITUTE OF STEEL CONSTRUCTION (AISC)

AISC S342L	(1993)Load and Resistance Factor Design Specifications for Structural Steel Buildings.

AMERICAN NATIONAL STANDARDS INSTITUTE (ANSI)

ANSI Z49.1	(1988) Safety in Welding and Cutting

AMERICAN SOCIETY FOR NONDESTRUCTIVE TESTING (ASNT)

ASNT-01	(1988) Recommended Practice SNT-TC-1A

AMERICAN WELDING SOCIETY (AWS)

AWS A2.4	(1993) Symbols for Welding, Brazing and Nondestructive Examination
AWS A3.0	(1989) Standard Welding Terms and Definitions
AWS D1.1	(1994) Structural Welding Code - Steel

1.2 DEFINITIONS

Definitions of welding terms shall be in accordance with AWS A3.0.

1.3 GENERAL REQUIREMENTS

The design of welded connections shall conform to AISC S335 unless otherwise indicated or specified. Material with welds will not be accepted unless the welding is specified or indicated on the drawings or otherwise approved. Welding shall be as specified in this section, except where additional requirements are shown on the drawings or are specified in other sections. Welding shall not be started until welding procedures, welders, welding operators, and tackers have been qualified and the submittals furnished to the Contracting Officer. Qualification testing shall be performed at or near the work site. Each Contractor performing welding shall maintain records of the test results obtained in welding procedure, welder, welding operator, and tacker performance qualifications.

1.4 SUBMITTALS

Government approval is required for submittals with a "GA" designation; submittals having an "FIO" designation are for information only. The following shall be submitted in accordance with Section 01330 - SUBMITTAL PROCEDURES:

SD-08 Statements

Welding Procedure Qualifications; FIO.

Welder, Welding Operator, and Tacker Qualification; FIO.

Inspector Qualification; FIO.

Copies of the welding procedure specifications; the procedure qualification test records; and the welder, welding operator, or tacker qualification test records.

SD-18 Records

Quality Control; FIO.

A quality assurance plan and records of tests and inspections.

1.5 WELDING PROCEDURE QUALIFICATIONS

Except for prequalified (per AWS D1.1) and previously qualified procedures, each Contractor performing welding shall record in detail and shall qualify the welding procedure specification for any welding procedure followed in the fabrication of weldments. Qualification of welding procedures shall conform to AWS D1.1 and to the specifications in this section. Copies of the welding procedure specification and the results of the procedure qualification test for each type of welding which requires procedure qualification shall be submitted. Approval of any procedure, however, will not relieve the Contractor of the sole responsibility for producing a finished structure meeting all the requirements of these specifications. This information shall be submitted on the forms in Appendix E of AWS D1.1. Welding procedure specifications shall be individually identified and shall be referenced on the detail drawings and erection drawings, or shall be suitably keyed to the contract drawings. In case of conflict between this specification and AWS D1.1, this specification governs.

1.5.1 Previous Qualifications

Welding procedures previously qualified by test may be accepted for this contract without requalification if the following conditions are met:

a. Testing was performed by an approved testing laboratory, technical consultant, or the Contractor's approved quality control organization.

b. The qualified welding procedure conforms to the requirements of this specification and is applicable to welding conditions encountered under this contract.

c. The welder, welding operator, and tacker qualification tests conform to the requirements of this specification and are applicable to welding conditions encountered under this contract.

1.5.2 Prequalified Procedures

Welding procedures which are considered prequalified as specified in AWS D1.1 will be accepted without further qualification. The Contractor shall submit a listing or an annotated drawing to indicate the joints not prequalified. Procedure qualification shall be required for these joints.

1.5.3 Retests

If welding procedure fails to meet the requirements of AWS D1.1, the procedure specification shall be revised and requalified, or at the Contractor's option, welding procedure may be retested in accordance with AWS D1.1. If the welding procedure is qualified through retesting, all test results, including those of test welds that failed to meet the requirements, shall be submitted with the welding procedure.

1.6 WELDER, WELDING OPERATOR, AND TACKER QUALIFICATION

Each welder, welding operator, and tacker assigned to work on this contract shall be qualified in accordance with the applicable requirements of AWS D1.1. Welders, welding operators, and tackers who make acceptable procedure qualification test welds will be considered qualified for the welding procedure used.

1.6.1 Previous Qualifications

At the discretion of the Contracting Officer, welders, welding operators, and tackers qualified by test within the previous 6 months may be accepted for this contract without requalification if all the following conditions are met:

a. Copies of the welding procedure specifications, the procedure qualification test records, and the welder, welding operator, and tacker qualification test records are submitted in accordance with the specified requirements for detail drawings.

b. Testing was performed by an approved testing laboratory, technical consultant, or the Contractor's approved quality control organization.

c. The previously qualified welding procedure conforms to the requirements of this specification and is applicable to welding conditions encountered under this contract.

d. The welder, welding operator, and tacker qualification tests conform to the requirements of this specification and are applicable to welding conditions encountered under this contract.

1.6.2 Certificates

Before assigning any welder, welding operator, or tacker to work under this contract, the Contractor shall submit the names of the welders, welding operators, and tackers to be employed, and certification that each individual

is qualified as specified. The certification shall state the type of welding and positions for which the welder, welding operator, or tacker is qualified, the code and procedure under which the individual is qualified, the date qualified, and the name of the firm and person certifying the qualification tests. The certification shall be kept on file, and 3 copies shall be furnished. The certification shall be kept current for the duration of the contract.

1.6.3 Renewal of Qualification

Requalification of a welder or welding operator shall be required under any of the following conditions:

a. It has been more than 6 months since the welder or welding operator has used the specific welding process for which he is qualified.

b. There is specific reason to question the welder or welding operator's ability to make welds that meet the requirements of these specifications.

c. The welder or welding operator was qualified by an employer other than those firms performing work under this contract, and a qualification test has not been taken within the past 12 months. Records showing periods of employment, name of employer where welder, or welding operator, was last employed, and the process for which qualified shall be submitted as evidence of conformance.

d. A tacker who passes the qualification test shall be considered eligible to perform tack welding indefinitely in the positions and with the processes for which he is qualified, unless there is some specific reason to question the tacker's ability. In such a case, the tacker shall be required to pass the prescribed tack welding test.

1.7 INSPECTOR QUALIFICATION

Inspection and nondestructive testing personnel shall be qualified in accordance with the requirements of ASNT-01 for Levels I or II in the applicable nondestructive testing method. The inspector may be supported by assistant welding inspectors who are not qualified to ASNT-01, and assistant inspectors may perform specific inspection functions under the supervision of the qualified inspector.

1.8 SYMBOLS

Symbols shall be in accordance with AWS A2.4, unless otherwise indicated.

1.9 SAFETY

Safety precautions during welding shall conform to ANSI Z49.1.

PART 2 - PRODUCTS

2.1 WELDING EQUIPMENT AND MATERIALS

All welding equipment, electrodes, welding wire, and fluxes shall be capable of producing satisfactory welds when used by a qualified welder or welding

operator performing qualified welding procedures. All welding equipment and materials shall comply with the applicable requirements of AWS D1.1.

PART 3 - EXECUTION

3.1 WELDING OPERATIONS

3.1.1 Requirements

Workmanship and techniques for welded construction shall conform to the requirements of AWS D1.1 and AISC S342L. When AWS D1.1 and the AISC S342Lspecification conflict, the requirements of AWS D1.1 shall govern.

3.1.2 Identification

Welds shall be identified in one of the following ways:

a. Written records shall be submitted to indicate the location of welds made by each welder, welding operator, or tacker.

b. Each welder, welding operator, or tacker shall be assigned a number, letter, or symbol to identify welds made by that individual. The Contracting Officer may require welders, welding operators, and tackers to apply their symbol next to the weld by means of rubber stamp, felt-tipped marker with waterproof ink, or other methods that do not cause an indentation in the metal. For seam welds, the identification mark shall be adjacent to the weld at 3-foot intervals. Identification with die stamps or electric etchers shall not be allowed.

3.2 QUALITY CONTROL

Visual inspection and testing shall be performed by an approved independent commercial inspection or testing laboratory. All field welds shall be visually inspected. All welds which are not acceptable from visual inspection and all full penetration field welds shall be inspected by radiographic or ultrasonic methods to determine conformance with paragraph "STANDARDS OF ACCEPTANCE". Procedures and techniques for inspection shall be in accordance with applicable requirements of AWS D1.1, except that in radiographic inspection only film types described as "fine grain" or "extra fine" shall be employed. Metal deck welding inspection shall be performed by visual inspection only.

3.3 STANDARDS OF ACCEPTANCE

Dimensional tolerances for welded construction, details of welds, and quality of welds shall be in accordance with the applicable requirements of AWS D1.1 and the contract drawings. Nondestructive testing shall be by visual inspection, radiographic or ultrasonic methods. The minimum extent of nondestructive testing shall be 100 percent of welds or joints.

3.3.1 Nondestructive Examination

The welding shall be subject to inspection and tests in the mill, shop, and field. Inspection and tests in the mill or shop will not relieve the Contractor of the responsibility to furnish weldments of satisfactory quality.

When materials or workmanship do not conform to the specification requirements, the Government reserves the right to reject material or workmanship or both at any time before final acceptance of the structure containing the weldment.

3.3.2 DESTRUCTIVE TESTS

When metallographic specimens are removed from any part of a structure, the Contractor shall make repairs. The Contractor shall employ qualified welders or welding operators, and shall use the proper joints and welding procedures, including peening or heat treatment if required, to develop the full strength of the members and joints cut and to relieve residual stress.

3.4 GOVERNMENT INSPECTION AND TESTING

In addition to the inspection and tests performed by the Contractor for quality control, the Government will perform inspection and testing for acceptance to the extent determined by the Contracting Officer. The costs of such inspection and testing will be borne by the Contractor if unsatisfactory welds are discovered, or by the Government if the welds are satisfactory. The work may be performed by the Government's own forces or under a separate contract for inspection and testing. The Government reserves the right to perform supplemental nondestructive and destructive tests to determine compliance with paragraph STANDARDS OF ACCEPTANCE.

3.5 CORRECTIONS AND REPAIRS

When inspection or testing indicates defects in the weld joints, the welds shall be repaired using a qualified welder or welding operator as applicable. Corrections shall be in accordance with the requirements of AWS D1.1 and the specifications. Defects shall be repaired in accordance with the approved procedures. Defects discovered between passes shall be repaired before additional weld material is deposited. Wherever a defect is removed and repair by welding is not required, the affected area shall be blended into the surrounding surface to eliminate sharp notches, crevices, or corners. After a defect is thought to have been removed, and before rewelding, the area shall be examined by suitable methods to insure that the defect has been eliminated. Repair welds shall meet the inspection requirements for the original welds. Any indication of a defect shall be regarded as a defect, unless reevaluation by nondestructive methods or by surface conditioning shows that no unacceptable defect is present.

- - o 0 o - -

SECTION 05120

STRUCTURAL STEEL

PART 1 - GENERAL

1.1 REFERENCES

The publications listed below form a part of this specification to the extent referenced. The publications are referred to in the text by basic designation only.

AMERICAN INSTITUTE OF STEEL CONSTRUCTION (AISC)

AISC-M018L	(1994) Load & Resistance Factor Design Manual Vol. 1 - Structural Members, Specifications, and Codes, Second Edition
AISC-M019L	(1994) Load & Resistance Factor Design Manual Vol. II - Connections, Second Edition
AISC S303	(1992) Code of Standard Practice for Steel Buildings and Bridges
AISC S342L	(1993) Load and Resistance Factor Design Specification for Structural Steel Buildings
AISC S334L	(1988) Load and Resistance Factor Design Specification for Structural Joints Using ASTM A325 or A490 Bolts

AMERICAN SOCIETY FOR TESTING AND MATERIALS (ASTM)

ASTM A 6	(1993b) General Requirements for Rolled Steel Plates, Shapes, Sheet Piling, and Bars for Structural Use
ASTM A 36	(1993a) Structural Steel
ASTM A 53	(1993a) Pipe, Steel, Black and Hot-Dipped, Zinc-Coated Welded and Seamless
ASTM A 307	(1993a) Carbon Steel Bolts and Studs, 60 000 PSI Tensile Strength
ASTM A 325	(1993) Structural Bolts, Steel, Heat Treated, 120/105 ksi Minimum Tensile Strength
ASTM A 490	(1993) Heat-Treated Steel Structural Bolts, 150 ksi Minimum Tensile Strength

ASTM A 500	(1993) Cold-Formed Welded and Seamless Carbon Steel Structural Tubing in Rounds and Shapes
ASTM A 563	(1993) Carbon and Alloy Steel Nuts
ASTM F 436	(1993) Hardened Steel Washers
ASTM F 844	(1990) Washers, Steel, Plain (Flat), Unhardened for General Use
ASTM F 959	(1993) Compressible-Washer-Type Direct Tension Indicators for Use with Structural Fasteners

AMERICAN SOCIETY OF MECHANICAL ENGINEERS (ASME)

ASME B18.21.1	(1990) Lock Washers (Inch Series)
ASME B46.1	(1985) Surface Texture (Surface Roughness, Waviness and Lay)

AMERICAN WELDING SOCIETY (AWS)

AWS A2.4	(1993) Standard Symbols for Welding, Brazing and Nondestructive Examination
AWS D1.1	(1994) Structural Welding Code - Steel

STEEL STRUCTURES PAINTING COUNCIL (SSPC)

SSPC Paint 25	(1991) Red Iron Oxide, Zinc Oxide, Raw Linseed Oil and Alkyd Primer (without Lead and Chromate Pigments)

1.2 GENERAL REQUIREMENTS

Structural steel fabrication and erection shall be performed by an organization experienced in structural steel work of equivalent magnitude. The Contractor shall be responsible for correctness of detailing, fabrication, and for the correct fitting of structural members. Connections, for any part of the structure not shown on the contract drawings, shall be considered simple shear connections and shall be designed and detailed in accordance with pertinent provisions of AISC-M018L and AISC-M019L. Substitution of sections or modification of connection details will not be accepted unless approved by the Contracting Officer. AISC S342L with pertinent provisions of AISC-M018L and AISC-M019L shall govern the work. Welding shall be in accordance with AWS D1.1. High-strength bolting shall be in accordance with AISC S334L.

1.3 SUBMITTALS

SD-04 Drawings

Structural Steel System; FIO.

Structural Connections; FIO.

Shop and erection details including members (with their connections) not shown on the contract drawings. Welds shall be indicated by standard welding symbols in accordance with AWS A2.4.

SD-08 Statements

Erection; FIO.

Erection plan of the structural steel framing required. Erection plan shall conform to the requirements of AISC S303, shall be submitted prior to erection, and shall describe all necessary temporary supports, including the sequence of installation and removal.

SD-13 Certificates

Mill Test Reports; FIO.

Certified copies of mill test reports for structural steel, structural bolts, nuts, washers and other related structural steel items.

Welder Qualifications; FIO.

Certified copies of welder qualifications test records showing qualification in accordance with AWS D1.1.

Fabrication; FIO.

A copy of the AISC certificate indicating that the fabrication plant meets the specified structural steelwork category.

SD-14 Samples

Bolts, Nuts, and Washers; FIO.

Random samples of bolts, nuts, and washers as delivered to the job site if requested, taken in the presence of the Contracting Officer and provided to the Contracting Officer for testing to establish compliance with specified requirements.

1.4 STORAGE

Material shall be stored out of contact with the ground in such manner and location as will minimize deterioration.

PART 2 - PRODUCTS

2.1 STRUCTURAL STEEL

2.1.1 Carbon Grade Steel

All steel shapes, except wide flange sections shall be carbon grade steel conforming to ASTM A 36.

2.2 STRUCTURAL TUBING

Structural tubing shall conform to ASTM A 500, Grade B.

2.3 STEEL PIPE

Steel pipe shall conform to ASTM A 53, Type E, Grade B.

2.4 HIGH STRENGTH BOLTS AND NUTS

High strength bolts shall conform to ASTM A 325, Type 1 with carbon steel nuts conforming to ASTM A 563, Grade C.

2.5 CARBON STEEL BOLTS

Carbon steel bolts shall conform to ASTM A 307, Grade A with carbon steel nuts conforming to ASTM A 563, Grade A.

2.6 NUTS DIMENSIONAL STYLE

Carbon steel nuts shall be Hex Style when used with ASTM A 307 bolts or Heavy Hex style when used with ASTM A 325 or ASTM A 490 bolts.

2.7 WASHERS

Plain washers shall conform to ASTM F 844. Other types, when required, shall conform to ASTM F 436.

2.8 PAINT

Paint shall conform to SSPC Paint 25.

PART 3 - EXECUTION

3.1 FABRICATION

Fabrication shall be in accordance with the applicable provisions of AISC-S303. Fabrication and assembly shall be done in the shop to the greatest extent possible. The fabricating plant shall be certified under the AISC quality certification program for Category I structural steelwork. Compression joints depending on contact bearing shall have a surface roughness not in excess of 500 micro inches as determined by ASME B46.1, and ends shall be square within the tolerances for milled ends specified in ASTM A 6. Structural steelwork, except surfaces of steel to be encased in concrete, surfaces to be field welded, surfaces to be fireproofed, and contact surfaces of friction-type high-strength bolted connections shall be prepared for painting in accordance with the AISC-M019L and primed with the specified paint.

3.2 ERECTION

Erection of structural steel shall be in accordance with the applicable provisions of AISC-S303.

3.2.1 Connections

Anchor bolts and other connections between the structural steel and foundations shall be provided and shall be properly located and built into connecting work. All structural steel bolted connections shall be tightened to the "Snug Tight Condition" as defined in the applicable provisions of AISC S334L.

3.2.2 Base Plates and Bearing Plates

Base plates for columns and bearing plates for beams, girders, and similar members shall be provided. Column base plates shall be provided with full bearing after the supported members have been plumbed and properly positioned, but prior to placing superimposed loads. Separate setting plates under column base plates will not be permitted. The area under the base plate shall be damp-packed solidly with high strength nonshrink grout as indicated on the drawings. Bearing plates for beams, girders, and similar structural members shall be leveled and properly positioned prior to placing the respective framing member. The area under the bearing plate shall be damp-packed solidly with bedding mortar or nonshrink grout or embedded into wet concrete as indicated on the drawings. Bedding mortar and grout shall be as specified in Section 03300 CAST-IN-PLACE STRUCTURAL CONCRETE.

3.2.3 Field Welded Connections

Field welded structural connections shall be completed before load is applied.

3.2.4 Field Priming

After erection, the field bolt heads, washer and nuts, field welds, and any abrasions in the shop coat shall be cleaned and primed with paint of the same quality as that used for the shop coat.

3.3 Quality Control

Testing shall be done by an approved independent commercial testing laboratory. The Contractor shall perform necessary inspection to determine conformance with paragraph "Standards of Acceptance".

3.4 Standards of Acceptance

Applicable requirements for bolted connections shall be as stated in paragraph "Connections" of this specification. The minimum extent of testing shall be 100% of all bolted connections.

- - o 0 o - -

SECTION 05210

STEEL JOISTS

PART 1 - GENERAL

1.1 REFERENCES

The publications listed below form a part of this specification to the extent referenced. The publications are referred to in the text by basic designation only.

STEEL JOIST INSTITUTE (SJI)

SJI-01	(1994) Standard Specifications Load Tables and Weight Tables for Steel Joists and Joist Girders

1.2 SUBMITTALS

Government approval is required for submittals with a "GA" designation; submittals having an "FIO" designation are for information only. The following shall be submitted in accordance with Section 01330 - SUBMITTAL PROCEDURES:

SD-04 Drawings

Steel Joists; FIO.

Detail drawings shall include fabrication and erection details, bill of materials, specifications for shop painting, and identification markings of joists and joist girders.

SD-13 Certificates

Steel Joists; FIO.

Certificates stating that the steel joists and joist girders have been designed and manufactured in accordance with SJI-01. Complete engineering design computations may be submitted in lieu of the certification.

1.3 DESCRIPTION

Steel joists and joist girders are designated on the drawings in accordance with the standard designations of the Steel Joist Institute. Joists of other standard designations or joists with properties other than those shown may be substituted for the joists designated provided the structural properties are equal to or greater than those of the joists shown and provided all other specified requirements are met.

1.4 DELIVERY AND STORAGE

Materials shall be delivered to the site in undamaged condition and stored off the ground in a well drained location, protected from damage, and easily accessible for inspection and handling.

PART 2 - PRODUCTS

2.1 OPEN WEB STEEL JOISTS

Open web steel joists shall conform to SJI-01, K-Series. Joists shall be designed to support the loads given in the standard load tables of SJI-01.

2.2 LONGSPAN STEEL JOISTS

Longspan steel joistsanddeep longspan steel joists shall conform to SJI-01, LH-SeriesDLH-Series. Joists designated LHandDLH shall be designed to support the loads given in the applicable standard load tables of SJI-01.

2.3 JOIST GIRDERS

Joist girders shall conform to SJI-01.

2.4 ACCESSORIES AND FITTINGS

Accessories and fittings, including end supports and bridging, shall be in accordance with the standard specifications under which the members were designed.

2.5 SHOP PAINTING

Joists, and joist girders and accessories shall be shop painted with a rust-inhibiting primer paint. For joists and joist girders which will be finish painted under Section 09900 PAINTING, GENERAL, the primer paint shall be limited to a primer which is compatible with the specified finish paint.

PART 3 - EXECUTION

3.1 ERECTION

Installation of joists and joist girders shall be in accordance with the standard specification under which the member was produced. Joists and joist girders shall be handled in a manner to avoid damage. Damaged joists and joist girders shall be removed from the site, except when field repair is approved and such repairs are satisfactorily made in accordance with the manufacturer's recommendations. Joists and joist girders shall be accurately set, and end anchorage shall be in accordance with the standard specification under which the joists and joist girders were produced. For spans over 40 ft through 60 ftone row of bridging nearest midspan shall be bolted diagonal bridging; for spans over 60 ft bolted diagonal bridging shall be used instead of welded horizontal bridging. Joist bridging and anchoring shall be secured in place prior to the application of any construction loads. Any temporary loads shall be distributed so that the carrying capacity of any joist is not exceeded. Loads shall not be applied to bridging during construction or in

the completed work. Abraded, corroded, and field welded areas shall be cleaned and touched up with the same type of paint used in the shop painting. Welding of joists to the supporting components shall be in compliance with section: WELDING, STRUCTURAL.

3.2 BEARING PLATES

Bearing plates shall be levelled and properly positioned prior to placing the joists and joist girders. The area under the plate shall be damp-packed solidly with bedding mortar or nonshrink grout, or embedded into wet concrete as indicated on the drawings. Bedding mortar and grout shall be as specified in Section 03300 CAST-IN-PLACE STRUCTURAL CONCRETE.

- - o 0 o - -

SECTION 05300

STEEL DECKING

PART 1 - GENERAL

1.1 REFERENCES

The publications listed below form a part of this specification to the extent referenced. The publications are referred to in the text by basic designation only.

AMERICAN INSTITUTE OF STEEL CONSTRUCTION (AISC)

AISC S342L	(1993)Load and Resistance Factor Design Specification for Structural Steel Buildings

AMERICAN IRON AND STEEL INSTITUTE (AISI)

AISI SG-673	(1987) Cold-Formed Steel Design Manual

AMERICAN SOCIETY FOR TESTING AND MATERIALS (ASTM)

ASTM A 108	(1993) Steel Bars, Carbon, Cold Finished, Standard Quality
ASTM A 446	(1993) Steel Sheet, Zinc-Coated (Galvanized) by the Hot-Dip Process, Structural (Physical) Quality
ASTM A 525	(1993) General Requirements for Steel Sheet, Zinc-Coated (Galvanized) by the Hot-Dip Process
ASTM A 570	(1992; R 1993) Steel, Sheet and Strip, Carbon, Hot-Rolled, Structural Quality
ASTM A 611	(1994) Steel, Sheet, Carbon, Cold-Rolled, Structural Quality
ASTM A 780	(1993a) Repair of Damaged and Uncoated Areas of Hot-Dipped Galvanized Coatings
ASTM A 792	(1993a) Steel Sheet, 55% Aluminum-Zinc Alloy-Coated by the Hot-Dip Process, General Requirements
ASTM C 423	(1990a) Sound Absorption and Sound Absorption Coefficients by the Reverberation Room Method
ASTM E 795	(1993) Mounting Test Specimens During Sound Absorption Tests

AMERICAN WELDING SOCIETY (AWS)

AWS D1.1	(1994) Structural Welding Code - Steel
AWS D1.3	(1989) Structural Welding Code - Sheet Steel

STEEL DECK INSTITUTE (SDI)

SDI-02	(1987; Amended 1991) Diaphragm Design Manual
SDI Pub No 28	(1992) Design Manual for Composite Decks, Form Decks, Roof Decks, and Cellular Metal Floor Deck with Electrical Distribution

STEEL STRUCTURES PAINTING COUNCIL (SSPC)

SSPC Paint 20	(1991) Zinc-Rich Primers (Type I - Inorganic and Type II - Organic)

1.2 SUBMITTALS

Government approval is required for submittals with a "GA" designation; submittals having an "FIO" designation are for information only. The following shall be submitted in accordance with Section 01330 - SUBMITTAL PROCEDURES:

SD-01 Data

Deck Units; FIO.

Catalog cut sheet pointing out the deck unit to be used, showing deck design properties and SDI certification that the units are designed in accordance with SDI specifications.

SD-04 Drawings

Deck Units; FIO.

Drawings shall include type, configuration, structural properties, location, and necessary details of deck units, accessories, and supporting members; size and location of holes to be cut and reinforcement to be provided; location and sequence of welded or fastener connections; and the manufacturer's erection instructions.

SD-13 Certificates

Deck Units; FIO.

Manufacturer's certificates attesting that the decking material meets the specified requirements. Manufacturer's certificate attesting that the operators are authorized to use the low-velocity piston tool.

SD-14 Samples

Deck Units; FIO.

Accessories; FIO.

A 2 sq. ft. sample of the decking material to be used, along with a sample of each of the accessories used. A sample of acoustical material to be used shall be included.

SD-18 Statements

Attachments; FIO.

Prior to welding operations, copies of qualified procedures and lists of names and identification symbols of qualified welders and welding operators.

1.3 DELIVERY, STORAGE, AND HANDLING

Deck units shall be delivered to the site in a dry and undamaged condition, stored off the ground with one end elevated, and stored under a weathertight covering permitting good air circulation. Finish of deck units shall be maintained at all times by using touch-up paint whenever necessary to prevent the formation of rust.

PART 2 - PRODUCTS

2.1 DECK UNITS

Deck units shall conform to SDI Pub No 28. Panels of maximum possible lengths shall be used to minimize end laps. Fabricate deck units in lengths to span 3 or more supports with flush, telescoped, or nested 2 inch laps at ends, and interlocking, or nested side laps, unless otherwise indicated. Deck with cross-sectional configuration differing from the units indicated may be used, provided that the properties of the proposed units, determined in accordance with AISI SG-673, are equal to or greater than the properties of the units indicated and that the material will fit the space provided without requiring revisions to adjacent materials or systems.

2.1.1 Roof Deck

Steel deck used in conjunction with insulation and built-up roofing shall conform to ASTM A 446, ASTM A 611. Roof deck units shall be fabricated of the steel design thickness required by the design drawings and shall be painted with an epoxy coating or equivalent applied to prime-coating in accordance with manufacturer's standard.

2.2 TOUCH-UP PAINT

Touch-up paint for shop-painted units shall be of the same type used for the shop painting, and touch-up paint for zinc-coated units shall be an approved galvanizing repair paint with a high-zinc dust content. Welds shall be touched-up with paint conforming to SSPC Paint 20 in accordance with ASTM A 780. Finish of deck units and accessories shall be maintained by using

touch-up paint whenever necessary to prevent the formation of rust.

2.3 ADJUSTING PLATES

Adjusting plates or segments of deck units shall be provided in locations too narrow to accommodate full-size units. As far as practical, the plates shall be the same thickness and configuration as the deck units.

2.4 CLOSURE PLATES

2.4.1 Closure Plates for Roof Deck

Voids above interior walls shall be closed with sheet metal where shown. Open deck cells at parapets, end walls, eaves, and openings through roofs shall be closed with sheet metal. Sheet metal shall be same thickness as deck units.

2.4.1.1 Cover Plates to Close Panels

Cover plates to close panel edge and end conditions and where panels change direction or abut. Butt joints in composite steel deck may receive a tape joint cover.

2.4.1.2 Column Closures to Close Openings

Column closures to close openings between steel deck and structural steel columns.

2.4.1.3 Sheet Metal

Where deck is cut for passage of pipes, ducts, columns, etc., and deck is to remain exposed, provide a neatly cut sheet metal collar to cover edges of deck. Do not cut deck until after installation of supplemental supports.

2.5 ACCESSORIES

The manufacturer's standard accessories shall be furnished as necessary to complete the deck installation. Metal accessories shall be of the same material as the deck and have minimum design thickness as follows: saddles, 0.0474 inch; welding washers, 0.0598 inch; cant strip, 0.0295 inch; other metal accessories, 0.0358 inch; unless otherwise indicated. Accessories shall include but not be limited to saddles, welding washers, cant strips, butt cover plates, underlapping sleeves, and ridge and valley plates.

PART 3 - EXECUTION

3.1 ERECTION

Erection of deck and accessories shall be in accordance with SDI Pub No 28 and the approved detail drawings. Damaged deck and accessories including material which is permanently stained or contaminated, with burned holes or deformed shall not be installed. The deck units shall be placed on secure supports, properly adjusted, and aligned at right angles to supports before being permanently secured in place. The deck shall not be filled with concrete, used for storage or as a working platform until the units have been secured in position. Loads shall be distributed by appropriate means to prevent damage

during construction and to the completed assembly. The maximum uniform distributed storage load shall not exceed the design live load. There shall be no loads suspended directly from the steel deck.

3.2 ATTACHMENTS

All fasteners shall be installed in accordance with the manufacturer's recommended procedure, except as otherwise specified. The deck units shall be welded with nominal 5/8 inch diameter puddle welds or fastened with screws, to supports as indicated on the design drawings and in accordance with requirements of SDI Pub No 28. All welding of steel deck shall be in accordance with AWS D1.3 using methods and electrodes as recommended by the manufacturer of the steel deck being used. Welds shall be made only by operators previously qualified by tests prescribed in AWS D1.3 to perform the type of work required. Welding washers shall be used at the connections of the deck to supports. Welding shall not be used to attach sidelaps. Holes and similar defects will not be acceptable. Deck ends shall be 2 inches. All partial or segments of deck units shall be attached to structural supports in accordance with Section 2.5 of SDI-02. Powder-actuated or pneumatically driven fasteners shall not be allowed.

3.3 HOLES AND OPENINGS

All holes and openings required shall be coordinated with the drawings, specifications, and other trades. Holes and openings shall be drilled or cut, reinforced and framed as indicated on the drawings or described in the specifications and as required for rigidity and load capacity. Holes and openings less than 6 inches across require no reinforcement. Holes and openings 6 to 12 inches across shall be reinforced by 0.0474 inch thick steel sheet at least 12 inches wider and longer than the opening and be fastened to the steel deck at each corner of the sheet and at a maximum of 6 inches on center. Holes and openings larger than 12 inches shall be reinforced by steel angles installed perpendicular to the steel joists and supported by the adjacent steel joists. Steel angles shall be installed perpendicular to the deck ribs and shall be fastened to the angles perpendicular to the steel joists. Openings must not interfere with seismic members such as chords and drag struts.

3.4 PREPARATION OF FIRE-PROOFED SURFACES

Deck surfaces, both composite and noncomposite, which are to receive sprayed-on fireproofing, shall be galvanized and shall be free of all grease, mill oil, paraffin, dirt, salt, and other contaminants which impair adhesion of the fireproofing. Any required cleaning shall be done prior to steel deck installation using a cleaning method that is compatible with the sprayed-on fireproofing.

- - o 0 o - -

SECTION 05500

MISCELLANEOUS METAL

PART 1 - GENERAL

1.1 REFERENCES

The publications listed below form a part of this specification to the extent referenced. The publications are referred to in the text by basic designation only.

ALUMINUM ASSOCIATION (AA)

AA DAF-45	(1980) Designation System for Aluminum Finishes
AA SAA-46	(1978) Standards for Anodized Architectural Aluminum

AMERICAN NATIONAL STANDARDS INSTITUTE (ANSI)

ANSI A14.3	(1992) Ladders - Fixed - Safety Requirements

AMERICAN SOCIETY FOR TESTING AND MATERIALS (ASTM)

ASTM A 36	(1993a) Structural Steel
ASTM A 53	(1993) Pipe, Steel, Black and Hot-Dipped, Zinc-Coated Welded and Seamless
ASTM A 123	(1989a) Zinc (Hot-Dip Galvanized) Coatings on Iron and Steel Products
ASTM A 283	(1993) Low and Intermediate Tensile Strength Carbon Steel Plates
ASTM A 446	(1993) Steel Sheet, Zinc-Coated (Galvanized) by the Hot-Dip Process, Structural (Physical) Quality
ASTM A 475	(1989) Zinc-Coated Steel Wire Strand
ASTM A 500	(1993) Cold-Formed Welded and Seamless Carbon Steel Structural Tubing in Rounds and Shapes
ASTM A 525	(1993) General Requirements for Steel Sheet, Zinc-Coated (Galvanized) by the Hot-Dip Process
ASTM B 26	(1992a) Aluminum-Alloy Sand Castings
ASTM B 221	(1992a) Aluminum and Aluminum-Alloy Extruded Bars, Rods, Wire, Shapes, and Tubes

ASTM B 429	(1992a) Aluminum-Alloy Extruded Structural Pipe and Tube
ASTM D 2047	(1982; R 1988) Static Coefficient of Friction of Polish-Coated Floor Surfaces as Measured by the James Machine

AMERICAN WELDING SOCIETY (AWS)

AWS D1.1	(1994) Structural Welding Code - Steel

FEDERAL SPECIFICATIONS (FS)

FS AA-S-271	(Rev D; Am 1) Shelving, Storage and Display, Steel, Interchangeable, Nut and Bolt Type
FS AA-S-1048	(Basic) Shelving, Storage and Display, Steel, Clip Type
FS RR-C-271	(Rev D) Chains and Attachments, Welded and Weldless
FS RR-G-1602	(Rev C) Grating, Metal, Other Than Bar Type (Floor, Except for Naval Vessels)

NATIONAL ASSOCIATION OF ARCHITECTURAL METAL MANUFACTURERS (NAAMM)

NAAMM-01	(1988) Metal Finishes Manual for Architectural and Metal Products

NATIONAL FIRE PROTECTION ASSOCIATION (NFPA)

NFPA 211	(1992) Chimneys, Fireplaces, Vents and Solid Fuel-Burning Appliances

1.2 SUBMITTALS

Government approval is required for submittals with a "GA" designation; submittals having an "FIO" designation are for information only. The following shall be submitted in accordance with Section 01330 SUBMITTAL PROCEDURES:

SD-04 Drawings

Miscellaneous Metal Items; FIO.

Detail drawings indicating material thickness, type, grade, and class; dimensions; and construction details. Drawings shall include catalog cuts, erection details, manufacturer's descriptive data and installation instructions, and templates. Detail drawings for the following items shall be submitted.

a. Access doors and frames.
b. Miscellaneous.

SD-14 Samples

Miscellaneous Metal Items; GA.

Samples of the following items: one of each type, shall be submitted. Samples shall be full size, taken from manufacturer's stock, and shall be complete as required for installation in the structure. Samples may be installed in the work, provided each sample is clearly identified and its location recorded.

a. Miscellaneous

1.3 GENERAL REQUIREMENTS

The Contractor shall verify all measurements and shall take all field measurements necessary before fabrication. Welding to or on structural steel shall be in accordance with AWS D1.1. Items specified to be galvanized, when practicable and not indicated otherwise, shall be hot-dip galvanized after fabrication. Galvanizing shall be in accordance with ASTM A 123, ASTM A 446, or ASTM A 525, as applicable. Exposed fastenings shall be compatible materials, shall generally match in color and finish, and shall harmonize with the material to which fastenings are applied. Materials and parts necessary to complete each item, even though such work is not definitely shown or specified, shall be included. Poor matching of holes for fasteners shall be cause for rejection. Fastenings shall be concealed where practicable. Thickness of metal and details of assembly and supports shall provide strength and stiffness. Joints exposed to the weather shall be formed to exclude water.

1.4 DISSIMILAR MATERIALS

Where dissimilar metals are in contact, or where aluminum is in contact with concrete, mortar, masonry, wet or pressure-treated wood, or absorptive materials subject to wetting, the surfaces shall be protected with a coat of bituminous paint or asphalt varnish.

1.5 WORKMANSHIP

Miscellaneous metalwork shall be well formed to shape and size, with sharp lines and angles and true curves. Drilling and punching shall produce clean true lines and surfaces. Welding shall be continuous along the entire area of contact except where tack welding is permitted. Exposed connections of work in place shall not be tack welded. Exposed welds shall be ground smooth. Exposed surfaces of work in place shall have a smooth finish, and unless otherwise approved, exposed riveting shall be flush. Where tight fits are required, joints shall be milled. Corner joints shall be coped or mitered, well formed, and in true alignment. Work shall be accurately set to established lines and elevations and securely fastened in place. Installation shall be in accordance with manufacturer's installation instructions and approved drawings, cuts, and details.

1.6 ANCHORAGE

Anchorage shall be provided where necessary for fastening miscellaneous metal items securely in place. Anchorage not otherwise specified or indicated shall

include slotted inserts made to engage with the anchors, expansion shields, and power-driven fasteners when approved for concrete; toggle bolts and through bolts for masonry; machine and carriage bolts for steel; and lag bolts and screws for wood.

PART 2 - PRODUCTS

2.1 ALUMINUM FINISHES

Unless otherwise specified, aluminum items shall have standard mill finish. . The thickness of the coating shall be not less than that specified for protective and decorative type finishes for items used in interior locations or architectural Class I type finish for items used in exterior locations in AA DAF-45.

2.2 SHOP PAINTING

Surfaces of ferrous metal except galvanized surfaces, shall be cleaned and shop coated with the manufacturer's standard protective coating unless otherwise specified. Surfaces of items to be embedded in concrete shall not be painted. Items to be finish painted shall be prepared according to manufacturer's recommendations or as specified.

2.3 MISCELLANEOUS

Miscellaneous plates and shapes for items that do not form a part of the structural steel framework, such as lintels, sill angles, miscellaneous mountings, and frames, shall be provided to complete the work.

2.4 METAL PANELS

Panels shall be either steel or aluminum and shall have a factory color. Steel panels shall be zinc-coated steel conforming to ASTM A 446, G 90 coating designation; aluminum-zinc alloy coated steel conforming to ASTM A 792, AZ 55 coating; or aluminum-coated steel conforming to ASTM A 463, Type 2, coating designation T2 65. Steel panels shall be 0.024-inch thick minimum. Aluminum panels shall be of alloy conforming to ASTM B 209, temper as required for the forming operation, minimum 0.032-inch thick.

2.5 SAFETY NOSING

Safety nosings shall be of cast iron with cross-hatched, abrasive surface. Nosing shall be 3 inches wide and terminating at not more than 6 inches from the ends of treads, except nosing for metal pan cement-filled treads shall extend the full length of the tread. Safety nosings shall be provided with anchors not less than 3/4 inch long. Integrally cast mushroom anchors are not acceptable.

PART 3 - EXECUTION

3.1 GENERAL REQUIREMENTS

All items shall be installed at the locations shown and according to the manufacturer's recommendations.

- - o 0 o - -

SECTION 06100

ROUGH CARPENTRY

PART 1 - GENERAL

1.1 REFERENCES

The publications listed below form a part of this specification to the extent referenced. The publications are referred to in the text by basic designation only.

AMERICAN PLYWOOD ASSOCIATION (APA)

APA E445	(1991; Rev May 1991) Performance Standards and Policies for Structural-Use Panels

CALIFORNIA REDWOOD ASSOCIATION (CRA)

CRA-RIS-01-SS	(1995) Standard Specifications for Grades of California Redwood Lumber

DEPARTMENT OF COMMERCE (DOC)

DOC PS 1	(1983) Construction and Industrial Plywood

NATIONAL HARDWOOD LUMBER ASSOCIATION (NHLA)

NHLA-01	(1994) Rules for the Measurement & Inspection of Hardwood & Cypress

NORTHEASTERN LUMBER MANUFACTURERS ASSOCIATION (NELMA)

NELMA-01	(1993) Standard Grading Rules for Northeastern Lumber

SOUTHERN CYPRESS MANUFACTURERS ASSOCIATION (SCMA)

SCMA-01	(1986; Supple No. 1, Aug 1993) Standard Specifications for Grades of Southern Cypress

SOUTHERN PINE INSPECTION BUREAU (SPIB)

SPIB-1001	(1994) Standard Grading Rules for Southern Pine Lumber

WEST COAST LUMBER INSPECTION BUREAU (WCLIB)

WCLIB Std 17	(1993) Grading Rules for West Coast Lumber

WESTERN WOOD PRODUCTS ASSOCIATION (WWPA)

WWPA-01 (1991; Supple No. 3) Western Lumber Grading Rules 91

1.2 DELIVERY AND STORAGE

Materials shall be delivered to the site in undamaged condition, stored off ground in fully covered, well ventilated areas, and protected from extreme changes in temperature and humidity.

PART 2 - PRODUCTS

2.1 LUMBER AND SHEATHING

2.1.1 Grading and Marking

Materials shall bear the grademark, stamp or other identifying marks indicating grades of material and rules or standard under which produced.

2.1.2 Sizes

Sizes shall conform to requirements of the rules or standards under which produced. Unless otherwise specified, lumber shall be surfaced on four sides. Size references, unless otherwise specified, are nominal sizes, and actual sizes shall be within manufacturing tolerances allowed by the standard under which the product is produced.

2.1.3 Treatment

Roof nailers shall be fire retardant.

2.1.3.1 Nailers

Nailers shall be redwood.

2.1.3.2 Plywood

Plywood shall be treated with waterborne preservatives to a retention level as follows:

a. 4 kg per cubic meter (0.25 pcf) intended for above ground use.

2.1.4 Ceiling Sheathing

Sheathing shall be plywood, for access control ceiling assembly.

2.1.4.1 Plywood

Plywood shall conform to DOC PS 1, Grade C-D with exterior glue. Sheathing for ceiling framing shall have a span rating of rating of 24/0 or greater for supports.

2.1.5 Miscellaneous Wood Members

Members shall include bridging, corner bracing, furring, grounds, and nailing strips. Members shall be in accordance with TABLE I for the species used. Sizes shall be as follows unless otherwise shown:

Member	Size (inch)
Nailing strips	2 by 6 inch minimum

2.2 ACCESSORIES AND NAILS

Accessories and nails shall be the type, size, and finish best suited for intended use unless indicated otherwise.

2.3 INSULATION

Thermal resistance of insulation shall not be less than the R-values shown. R-values shall be determined at 75 degrees F in accordance with ASTM C 518.

2.3.1 Batt or Blanket

2.3.1.1 Glass Fiber Batts and Rolls

Glass fiber batts and rolls shall conform to ASTM C 665, Type I unfaced insulation Class A, having a UL rating of 25 and a smoke developed rating of 150 or less when tested in accordance waith ASTM E 84.

2.3.1.2 Mineral Fiber Batt

Mineral fiber batt shall conform to ASTM C 665, Type I unfaced insulation.

2.3.1.3 Mineral Fiber Blanket

Mineral fiber blanket shall conform to FS HH-I-558, Form B, Type I, Class 6.

PART 3 - EXECUTION

3.1 INSTALLATION OF SHEATHING

3.1.1 Plywood

Sheathing shall be applied with edges 1/8 inch apart at side and end joints, and screwed at supported edges at 6 inches on center and at intermediate supports 12 inches on center. Securing of edges shall be 3/8 inch from the edges.

3.2 INSTALLATION OF MISCELLANEOUS WOOD MEMBERS

3.2.1 Nailers

Nailers shall be provided as necessary for the attachment of roofing materials. Nailers used in conjunction with roof deck installation shall be installed flush with the roof deck system. Stacked nailers shall be assembled

with spikes or nails spaced not more than 18 inches on center and staggered. Beginning and ending nails shall not be more than 6 inches for nailer end. Ends of stacked nailers shall be offset approximately 12 inches in long runs and alternated at corners. Anchors shall be a minimum 3/8 inch diameter steel toggle bolts and spaced at 32 inches on center. Nailer anchors shall extend through the entire thickness of the nailer and metal roof deck. Heads of anchor bolts shall be recessed into the top nailer to provide a flush finish. Strips shall be run in lengths as long as practicable, butt jointed, cut into wood framing members when necessary, and rigidly secured in place.

TABLE I. SPECIES AND GRADE

Ceiling Sheathing, Nailers

Grading Rules	Species	Const Standard	No. 2 Comm	No. 2 Board Comm	No. 3 Comm
CRA-RIS-01-SS	Redwood		X		

- - o 0 o - -

SECTION 06410 - CUSTOM CASEWORK

PART 1 - GENERAL

1.1 REFERENCES

The publications listed below form a part of this specification to the extent referenced. The publications are referred to in the text by basic designation only.

AMERICAN NATIONAL STANDARDS INSTITUTE (ANSI)

ANSI A208.1	(1989) Wood Particleboard

AMERICAN SOCIETY FOR TESTING AND MATERIALS (ASTM)

ASTM D 1037	(1991) Evaluating the Properties of Wood-Base Fiber and Particle Panel Materials

ARCHITECTURAL WOODWORK INSTITUTE (AWI)

AWI-02	(1988) Architectural Woodwork Quality Standards, Guide Specifications, and Quality Certification Program

BUILDERS HARDWARE MANUFACTURERS ASSOCIATION (BHMA)

BHMA A156.9	(1988) Cabinet Hardware
BHMA A156.18	(1987) Materials and Finishes

NATIONAL ELECTRICAL MANUFACTURERS ASSOCIATION (NEMA)

NEMA LD 3	(1991) High-Pressure Decorative Laminates

1.2 SUBMITTALS

Government approval is required for submittals with a "GA" designation; submittals having an "FIO" designation are for information only. The following shall be submitted in accordance with Section 01330 - SUBMITTAL PROCEDURES:

SD-01 Data

Custom Casework; FIO.

Manufacturer's catalog data, including standard color charts.

SD-04 Drawings; FIO.

Custom Casework.

Drawings shall show each type of casework, counters, cabinets, and related items, and shall clearly indicate the complete layout of the cabinets and accessories, and pertinent details of construction, fabrication and attachments.

SD-06 Instructions

Custom Casework; FIO.

Manufacturer's instructions shall include assembling, installation, finishing, and maintenance instructions.

SD-14 Samples

Custom Casework; FIO.

Solid Surface Material; FIO.

Plastic Laminate; FIO.

Stainless Steel; FIO.

Samples shall be submitted with the drawings. In lieu of individual samples, complete minimum size casework may be furnished as samples. Mock-up units are not acceptable. Samples shall include the following items:

a. Door and drawer fronts - one of each type, with hardware mounted.

b. Countertop and backsplash - one section, 4-inches wide, containing both.

c. Plastic laminate color samples, 3 by 6 inches.

1.3 DELIVERY, HANDLING, AND STORAGE

The Contractor shall protect materials from damage during delivery, when stored, and during construction. Damaged and defective materials shall be removed and replaced with new. Cabinet work shall be constructed, or delivered and brought into the building, only after the building has dried out, following the installation of wet materials, and when there is no danger of damage to materials due to excessive moisture. Mill-fabricated cabinets and casework shall be delivered to the project with a factory-applied durable finish.

PART 2 - PRODUCTS

2.1 GENERAL REQUIREMENTS

Casework, including cabinets and counters, shall be flush overlay design and shall be custom built, either at a mill or in-place in the building. Casework shall be custom grade, and unless otherwise specified, shall be built to the quality standards specified in AWI-02 for cabinets and casework. Design shall be as indicated on the drawings.

2.1.1 Particleboard

Wood particleboard shall be a mat-formed particleboard conforming to ANSI A208.1, Type I (interior) medium density, Grade 1-M-2. Board shall be laminated construction, composed of large wood flakes at the core and finer wood flakes at each surface. Flakes shall be coated and bonded with urea-formaldehyde resin under heat and pressure-formed into boards. When tested in accordance with ASTM D 1037 and in addition to complying with the properties listed in ANSI A208.1, water absorption shall not exceed 15 percent in 24 hours, swelling thickness shall not exceed 6 percent in 24 hours, and maximum moisture content shall not exceed 7 percent. Wood particleboard intended for use as exposed or semi-exposed shelving or casework shall be sanded and sealed on both surfaces; exposed edges shall be trimmed with 3/4- by 3/8-inch solid poplar, birch, or oak, with tongue-and-groove joint or butt joint glued to the particleboard with water-resistant glue.

2.1.2 Construction

Construction shall be plumb, square, and true; accurately milled and fabricated to details with clean-cut profiles and lines. Accurately size the cabinets, counters, and casework to the indicated dimensions. Surfaces shall be flat, true, free of planer marks or other mars, and smoothly sanded. Select best wood pieces with most uniform grain and color for exposed surfaces. Where possible, conceal fastenings; where not possible, locate fastenings in inconspicuous places. Where nailing is permitted on exterior exposed faces, conceal nailheads. Do not fasten with exposed nails in hardwood. Mortise, tenon, spline, house, joint, block, nail, screw, glue, or bolt together, as approved, in manner to provide rigidity, to avoid swelling or shrinking, and to insure work to remain in place without warping, splitting, and opening of joints. Furnish and securely install cleats, nailers, strips, blocking, hangers, anchors, moldings, and the like, required to neatly and securely install cabinets, counters, and casework.

2.1.2.1 Framing

Cabinets and counters, constructed in place shall have frame fronts and solid ends, or frame construction throughout. Frame member shall be 3/4- by 1-1/2-inch kiln-dried hardwood, mortised and tenoned, dovetailed or doweled, and glued together. Top and bottom corners shall be braced with hardwood blocks that are glued with water-resistant glue and nailed in place. Continuous back panels shall be provided for all mill-fabricated counters, cabinets, shelving, and casework. Back panels shall be 1/4-inch minimum thick hardwood plywood, sound grade, or 1/8-inch tempered hardboard when painted or concealed. Exposed or semi-exposed backs shall be hardwood plywood of the same veneer as the face of the cabinet. Bottoms of cabinets shall be minimum 3/8-inch plywood good grade and shall be braced with wood members glued in place. Cabinet ends shall be 5/8-inch thick medium density particleboard core with plastic laminate veneers. Shelves shall be fully adjustable and shall be minimum 5/8-inch thick particleboard.

2.1.2.2 Counter and Cabinet Bases

Bases shall be constructed of 2 inches thick wood framing, members cut to fit, with toe space of the indicated height and depth. Cross rails shall be

provided at cabinet ends, points of concentrated loads, and intervals not to exceed 24 inches.

2.1.2.3 Doors and Drawer Fronts

Door design shall be solid flush face. Flush doors shall be hardwood plywood with matching solid hardwood edges. Lipped doors shall be hardwood plywood with lumber core. Drawer fronts shall be at least 3/4-inch thick solid wood or edge-banded hardwood plywood with veneer species to match cabinet. Doors and drawer fronts, including edges, shall be covered with shop-applied plastic laminate.

2.1.2.4 Countertops and Backsplashes

Countertops and backsplashes shall be constructed of hardwood framing as required for solid surface material. Countertops shall be at least 3/4-inch thick. Backsplash shall be solid surface material, 3/4-inch thick. Unless otherwise indicated, backsplashes shall be not less than 3-1/2 inches high. Where indicated in the drawings countertops and backsplashes shall be constructed of 14 gage stainless steel with all seams and corners welded, ground smooth, and polished. Counter edges shall be turned down 2 inches at 90 degrees with 3/4 inch tight hem at bottom. Free corners shall be rounded on 3/4 inch radus.

2.1.3 Fasteners and Adhesives

2.1.3.1 Nails

Nails shall be steel casing nails with flat countersunk cupped head and diamond point.

2.1.3.2 Adhesives

Adhesives shall be moisture- and mold-resistant. Adhesive shall also be contact type for adhering plastic laminate sheets and as required by solid surface material manufacturer.

2.1.3.3 Wood Screws

Wood screws shall be carbon steel or brass. Wood screws exposed to view shall be brass with an oval head with cross recess drive.

2.2 CABINET HARDWARE

Cabinet finish hardware shall conform to the types and styles of BHMA A156.9. Screws and attachments shall be finished to match the hardware item. Finishes shall be in accordance with BHMA A156.18 and shall match that of the builders' hardware specified in Section 08700 BUILDERS' HARDWARE unless otherwise specified. Finishes shall be 639 for hardware items having a base metal of steel, 612 for hardware items having a base metal of bronze or brass, 628 for hardware items having a base metal of aluminum, and 630 for items having a base metal of stainless steel.

2.2.1 Shelf Supports

2.2.1.1 Flush-Applied Supports

Flush-applied, adjustable shelf supports shall be B24071, wrought brass, nickel plated with 1/2-inch increment adjustment slots and with provision for screw fastening 6 inches on vertical center.

2.2.1.2 Shelf Rests

Shelf rests shall be Type B24081, wrought brass, nickel plated. Rests shall have a minimum projection of 3/4-inch and a minimum width of 9/16-inch. Shelf rests for use in drilled holes shall be B84013, wrought steel, nickel plated with 1/4-inch diameter pin, 3/8-inch long, overall length 1-1/4 inches.

2.2.2 Cabinet Hinges

Cabinet hinges shall be wrought steel or brass, designated size and finish and shall conform to BHMA A156.9, as follows:

Concealed hinges for flush doors shall be B81501.

2.2.3 Cabinet Catches

Cabinet catches shall be B43142, magnetic catches, aluminum case, minimum 1.8-kg 4-pound pull.

2.2.4 Pulls

Door and drawer pulls shall be B12011, "bent wire", contemporary-design, cast bronze, 3-inch centers, screw attached from inside of door or drawer.

2.2.5 Drawer Slides

Drawer slides shall be B85051, ball bearing full extension drawer slides for attachment to each side of drawer. Rubber stops shall be provided at striking points.

2.3 PLASTIC LAMINATES SOLID SURFACE MATERIALS AND STAINLESS STEEL

2.3.1 Edges and Shelves

Exposed cabinet surfaces, other than countertops and backsplashes shall be covered with high-pressure plastic laminate, general-purpose type, conforming to NEMA LD 3, Type GP50. Color, pattern, and finish shall be as indicated in the ROOM FINISH AND COLOR SCHEDULE.

2.3.2 Countertops and Backsplashes

Countertops and backsplashes shall be constructed of solid surface material or 14 gage stainless steel as indicated in the drawings. Backsplashes and nosings shall be constructed as indicated on the drawings. Color, pattern, and finish shall be as indicated in the the drawings. Countertops shall be constructed in such a manner as to minimize the need for splices. Openings for sinks and

other plumbing items shall be coordinated with the applicable trades. Solid surface material shall have the following performance characteristics:

Tensile Strength, 4100 lb./sq. in.
Tensile Modulus, 500,000 lb./sq. in.
Tensile elongation (%), 0.8.
Flexural Strength, 7200 lb./sq. in.
Liquid Absorption,(24 hr., %), 0.03.
Flame Spread Index, 3/4", 5
Smoke Developed Index, 0.0.

2.3.3 Vertical Surfaces

Plastic laminate surfaces for drawer and counter fronts, exposed-to-view ends, and doors shall be high-pressure plastic laminate, general purpose type, conforming to NEMA LD 3, Type GP38. Color, pattern, and finish shall be as indicated on the drawings or selected from the manufacturer's standard colors.

2.4 SINK RIMS

Sink rims, if required, shall be corrosion resistant steel, clamping type, sized to the sink, and a standard product of a manufacturer regularly producing this type of equipment.

PART 3 - EXECUTION

3.1 GENERAL

Casework shall be installed only when temperature and humidity conditions approximate the interior conditions that will exist when the building is occupied. The relative humidity in the building at the time of installation of materials shall be within the limits recommended by the manufacturer. Casework shall be installed level, plumb, and true to line, and shall be attached to the walls or floors with concealed toggle bolts. Countertops, accessories, and hardware shall be installed as indicated. Closure and filler strips and finish moldings shall be provided as required. Make neat, close-fitting cut-outs for indicated sinks, plumbing, and other items projecting through tops. Carefully locate cut-outs for pipes so that edges of holes will be covered by escutcheons. The inner edge of sink cut-outs shall be painted with a coat of semigloss enamel paint; sink flanges shall be set in a bed of sealants. Prior to final acceptance, the Contractor shall aline all doors, adjust all hardware, and leave cabinets in a clean and neat condition.

3.1.1 Counters

Conceal fastenings where practicable, fit the counter neatly, install in a rigid and substantial manner, and scribe to adjoining surfaces. Provide counter sections in the longest lengths practicable; keep joints in tops to a minimum; and where joints are necessary, provide tight joints as required by the certified solid surface material installer drawn up with concealed-type heavy pull-up bolts.

3.1.2 Nailing

Exposed nailing shall be countersunk finishing nails; the countersunk holes shall be filled with a matching wood filler or putty. Staples shall not be permitted in exposed cabinet or casework.

3.1.3 Finishing

Exposed wood surfaces shall be machine sanded at the mill to the specified standard and then shall receive a final sanding at the site to a smooth clean finish, free of machine or tool marks, abrasions, raised grain, or similar imperfections.

3.2 APPLICATION OF PLASTIC LAMINATE

Plastic laminate shall be a continuous sheet of the longest length practicable. Joints in the surface sheeting shall be tight and flush, and held to a practical minimum number. Apply with contact type adhesive, type as recommended by the manufacturer of the laminate, applied to both surfaces. The edging and trim shall consist of strips of laminate cut and fitted to all exposed edges with approved contact adhesive. Exposed edges shall be rounded to 1/32-inch radius.

- - o 0 o - -

SECTION 07220

ROOF INSULATION

PART 1 - GENERAL

1.1 REFERENCES

The publications listed below form a part of this specification to the extent referenced. The publications are referred to in the text by basic designation only.

AMERICAN NATIONAL STANDARDS INSTITUTE (ANSI)

ANSI A208.1	(1993) Particleboard

AMERICAN SOCIETY FOR TESTING AND MATERIALS (ASTM)

ASTM C 208	(1995) Cellulosic Fiber Insulating Board
ASTM C 552	(1991) Cellular Glass Thermal Insulation
ASTM C 578	(1995) Rigid, Cellular Polystyrene Thermal Insulation
ASTM C 726	(1993) Mineral Fiber Roof Insulation Board
ASTM C 728	(1991) Perlite Thermal Insulation Board
ASTM C 984	(1994) Perlite Board and Rigid Cellular Polyurethane Composite Roof Insulation
ASTM C 1050	(1991) Rigid Cellular Polystyrene - Cellulosic Fiber Composite Roof Insulation
ASTM C 1289	(1995) Faced Rigid Cellular Polyisocyanurate Thermal Insulation Board
ASTM D 41	(1994) Asphalt Primer Used in Roofing, Dampproofing, and Waterproofing
ASTM D 226	(1994) Asphalt-Saturated Organic Felt Used in Roofing and Waterproofing
ASTM D 312	(1995) Asphalt Used in Roofing
ASTM D 2178	(1989) Asphalt Glass Felt Used in Roofing and Waterproofing
ASTM D 4586	(1993) Asphalt Roof Cement, Asbestos Free
ASTM D 4897	(1994) Asphalt-Coated Glass-Fiber Venting Base Sheet Used in Roofing

ASTM F 547 (1977; R 1990) Terminology of Nails for Use with Wood and Wood-Base Materials

FACTORY MUTUAL ENGINEERING AND RESEARCH (FM)

FM P7825 (1995; Supple 1; Supple II; Supple III) Approval Guide

UNDERWRITERS LABORATORIES (UL)

UL-01 (1996) Building Materials Directory

1.2 SUBMITTALS

Government approval is required for submittals with a "GA" designation; submittals having an "FIO" designation are for information only. The following shall be submitted in accordance with Section 01330 - SUBMITTAL PROCEDURES:

SD-06 Instructions

Application of Insulation; FIO.

Insulation manufacturer's recommendations for the application and installation of insulation.

SD-08 Statements

Inspection; FIO.

The inspection procedure for insulation installation, prior to start of roof insulation work.

SD-13 Certificates

Insulation; FIO.

Glass Roofing Felt; FIO.

Organic Roofing Felt; FIO.

Certificate attesting that the expanded perlite or polyisocyanurate insulation contains recovered material and showing estimated percent of recovered material. Certificates of compliance for felt materials.

1.3 STORAGE OF MATERIALS

Extruded polystyrene shall be stored in accordance with manufacturer's instructions. Other insulation, base sheet, and felt shall be kept dry at all times, before, during, and after delivery to the site and shall be stored in an enclosed building or in a closed trailer. Wet insulation, wet base sheet or wet felt shall be permanently removed from the site. Felts shall be

stacked on end one level high. Felt rolls shall be maintained at a temperature above 50 degrees F for 24 hours immediately before laying.

1.4 FIRE CLASSIFICATION

Insulation shall have been tested as part of a roof construction assembly of the type used in this project and the construction shall be listed as Fire-Classified in UL-01 or Class I in FM P7825, except for installation on precast concrete roof deck panels.

PART 2 - PRODUCTS

2.1 BITUMINOUS MATERIALS

Bituminous materials shall conform to the following requirements:

2.1.1 Asphalt Bitumen

ASTM D 312, Type III or IV. Asphalt flash point, finished blowing temperature, and equiviscous temperature (EVT) shall be indicated on bills of lading or on individual containers.

2.1.2 Asphalt Cement

ASTM D 4586, Type I for horizontal surfaces; Type II for vertical surfaces.

2.1.3 Asphalt Primer

ASTM D 41.

2.2 INSULATION

Insulation shall be a standard product of the manufacturer and shall be factory marked with the manufacturer's name or trade mark, the material specification number, the R-value at 75 degrees F, and the thickness. Minimum thickness shall be as recommended by the manufacturer. Boards shall be marked individually. The thermal resistance of insulation shall be not less than the R-value shown on the drawings. The insulation manufacturing process shall not include chlorofluoro carbons (CFC) or formaldehydes. Insulation and fiberboard shall contain the highest practicable percentage of material which has been recovered or diverted from solid waste (e.g., postconsumer waste), but not including material reused in a manufacturing process. Where two materials have comparable price and performance, the one having the higher recovered material content shall be selected. Insulation shall be one, or a combination of the following materials:

2.2.1 Cellular Glass

ASTM C 552, Type IV.

2.2.2 Composite Board Insulation

ASTM C 726, or ASTM C 984 or ASTM C 1050 or ASTM C 1289 Type III, or ASTM C 1289 Type VI. Perlite, in composite board, may be replaced with ANSI A208.1

wood particle board, 7/16 inch minimum thickness, provided that the composite board meets specified physical requirements. Composite board with wood particle board shall conform to ASTM C 1289, Type V.

2.2.3 Expanded-Perlite Insulation Board

ASTM C 728 with a minimum recovered material content of 23 percent of the expanded perlite portion of the board.

2.2.4 Fiberboard

ASTM C 208 Type II, Grade 1 , roof insulating board with a minimum recovered material content of 80 percent, treated with sizing, wax or bituminous impregnation. Bituminous impregnation shall be limited to 4 percent by weight when used over steel decks.

2.2.5 Mineral-Fiber Insulation Board

ASTM C 726.

2.2.6 Polyisocyanurate

ASTM C 1289, Type I, or ASTM C 1289 Type II, having minimum recovered material content of 9 percent by weight of the polyisocyanurate portion of the board.

2.2.7 Polystyrene

ASTM C 578, Type II, IV, or X.

2.3 NAILS AND FASTENERS

Nails and fasteners shall conform to the following requirements:

2.3.1 Nails for Fastening Insulation to Flush Mounted Wood Nailers

ASTM F 547 of sufficient length to hold insulation securely in place.

2.3.2 Fasteners

Fasteners for steel or concrete decks shall conform to FM P7825 for Class I roof deck construction, and shall be spaced to withstand an uplift pressure of 90 pounds per square foot.

2.3.3 Metal Disks

Flat and not less than 30 gauge thickness. Disks used with nails or fasteners for securing fiberboard insulation shall be minimum 1 inch diameter. Disks used with nails or fasteners for securing other board insulation shall be minimum 2-1/8 inches in diameter.

2.4 VENTING INORGANIC BASE SHEET

ASTM D 4897, Type II, Non-perforated, with spot mopping holes where specified.

2.5 GLASS ROOFING FELT

ASTM D 2178, Type IV.

2.6 ORGANIC ROOFING FELT

ASTM D 226, Type I.

2.7 WOOD NAILERS

Wood nailers shall conform to Section 06100 - ROUGH CARPENTRY including preservative treatment. Edge nailers shall be not less than nominal 6 inches wide and of thickness to finish flush with the top surface of the insulation. Surface mounted nailers shall be a nominal 3 inches wide by the full thickness of the insulation.

PART 3 - EXECUTION

3.1 COORDINATION REQUIREMENTS

Insulation and roofing membrane shall be finished in one operation up to the line of termination at the end of each day's work. Completed sections shall be waterproofed when more than one day is required to finish the roofing. Phased construction will not be permitted.

3.2 ENVIRONMENTAL CONDITIONS

Air temperature shall be above 40 degrees F and there shall be no visible ice, frost, or moisture on the roof deck when the insulation and roofing are installed.

3.3 SUBSTRATE PREPARATION

The substrate construction of any bay or section of the building shall be completed before insulation or vapor retarder work is begun thereon. Insulation or vapor retarder applied directly on concrete shall not be scheduled until frothing or bubbling does not occur when hot bitumen is applied to the concrete and until the hot bitumen sticks tightly to the concrete. Vents and other items penetrating the roof shall be secured in position and properly prepared for flashing. Prior to application of vapor retarder or insulation, substrate joints shall be covered with a 4 inch strip of roofing felt, embedded in and coated with asphalt cement. Substrate surface shall be smooth, clean, and dry at time of application.

3.4 HEATING OF ASPHALT

Asphalt shall not be heated higher than 75 degrees F above the EVT or 50 degrees F below the flash point, or 525 degrees F, whichever is lower. EVT and flash point temperatures of asphalt in the kettle shall be conspicuously posted on the kettle. Kettle shall be provided with automatic thermostatic controls and an accurate thermometer. Kettle operators shall be in attendance at all times during heating to ensure that the maximum temperature is not exceeded. Asphalt shall be applied within a range of 25 degrees F below or above the EVT, or as specified by the manufacturer. Application temperature

shall be measured at the mop bucket or mechanical applicator. Asphalt at a temperature below this range shall be returned to the kettle. Flame-heated equipment shall not be placed on the roof.

3.5 APPLICATION OF INSULATION

Insulation shall be laid in two or more layers. Units of insulation shall be laid in courses parallel with the roof slope. End joints shall be staggered. Insulation shall be cut to fit neatly against adjoining surfaces. Joints between insulation boards shall not exceed 1/4 inch. Joints in successive layers shall be staggered with respect to joints of preceding layer. Where insulation is applied over steel deck, long edge joints shall continuously bear on surfaces of the steel deck. Insulation which can be readily lifted after installation is not considered to be adequately secured. Insulation shall be applied so that all roof insulation applied each day is waterproofed the same day. Phased construction will not be permitted. Application of impermeable faced insulation shall be performed without damage to the facing.

3.5.1 Mechanical Fastening

On steel decks, or any slope exceeding 1/2 inch per foot, the first layer of insulation shall be mechanically fastened. Method of attachment shall be in accordance with recommendations of the insulation manufacturer and requirements specified.

3.5.2 Steel Decks

Uninsulated steel decks shall have insulation applied to span the steel deck flutes and to act as an underlayment for the roof membrane. First layer of insulation on steel deck shall be compatible with mechanical fastening.

3.5.3 Foam Insulation

Polyisocyanurate, or polystyrene foam insulations shall be isolated from built-up roof membrane by a separate or composite layer of cellular glass, mineral fiber board, perlite board, or fiberboard. Polystyrene shall not be exposed to solvent-base adhesive, coal-tar bitumen or to asphalt which is hotter than 200 degrees F.

3.5.4 Installation

Except for the first layer on steel deck, insulation layers shall be laid in solid moppings of hot asphalt applied at a rate of at least 20 pounds per square. Asphalt shall not be applied further than one panel length ahead of roof insulation being installed. Where roof slopes are greater than 1/2 inch per foot, roof insulation shall be held in place by both asphalt mopping and mechanical fasteners. Asphalt primer shall be applied at the rate of 1 gallon per square over the entire surface to be mopped when the insulation is applied over concrete deck. The edges of insulation boards adjoining vented nailers shall be kept free of asphalt.

3.5.5 Protection Requirements

The insulation shall be kept dry at all times. Insulation boards shall not be kicked into position. Exposed edges of the insulation shall be protected by cutoffs at the end of each work day or whenever precipitation is imminent. Cutoffs shall be 2 layers of bituminous-saturated felt set in plastic bituminous cement. Cutoffs shall be removed when work is resumed. Edges of insulation at open spaces between insulation and parapets or other walls and spaces at curbs, scuttles, and expansion joints, shall be protected until permanent roofing and flashing is applied. Storing, walking, wheeling, or trucking directly on insulation or on roofed surfaces will not be permitted. Smooth, clean board or plank walkways, runways, and platforms shall be used, as necessary to distribute weight to conform to pounds per square foot live load limit.

- - o 0 o - -

SECTION 07270

FIRESTOPPING

PART 1 - GENERAL

1.1 REFERENCES

The publications listed below form a part of this specification to the extent referenced. The publications are referred to in the text by basic designation only.

AMERICAN SOCIETY FOR TESTING AND MATERIALS (ASTM)

ASTM E 84	(1995a) Surface Burning Characteristics of Building Materials
ASTM E 814	(1994b) Fire Tests of Through-Penetration Fire Stops

UNDERWRITERS LABORATORIES (UL)

UL-05	(1995; Supple) Fire Resistance Directory
UL 723	(1993; Rev Apr 1994) Test for Surface Burning Characteristics of Building Materials
UL 1479	(1994) Fire Tests of Through-Penetration Firestops

1.2 SUBMITTALS

Government approval is required for submittals with a "GA" designation; submittals having an "FIO" designation are for information only. The following shall be submitted in accordance with Section 01330 - SUBMITTAL PROCEDURES:

SD-04 Drawings

Firestopping Materials; FIO.

Detail drawings including manufacturer's descriptive data, typical details, installation instructions and the fire-test data and/or report as appropriate for the fire resistance rated construction and location. Submittal shall indicate the firestopping material to be provided for each type of application. When more than 5 penetrations are to receive firestopping, drawings shall indicate location and type of application.

SD-13 Certificates

Firestopping Materials; FIO.

Certificates attesting that firestopping material complies with the specified requirements. The label or listing of the Underwriters Laboratories will be acceptable evidence. In lieu of the label or listing, a written certificate may be submitted from an approved, nationally recognized testing agency equipped to perform such services, stating that the items have been tested and conform to the specified requirements and testing methods.

Installer Qualifications; FIO.

Certification stating that installer is qualified and trained to install the specified firestopping material.

Inspection; FIO.

Manufacturer's representative certification stating that firestopping work has been inspected and found to be applied according to the manufacturer's recommendations and the specified requirements.

1.3 GENERAL REQUIREMENTS

Firestopping shall consist of furnishing and installing a material or a combination of materials to form an effective barrier against the spread of flame, smoke and gases, and maintain the integrity of fire resistance rated walls, partitions, floors, and ceiling-floor assemblies, including through-penetrations and construction joints. Through-penetrations include the annular space around pipes, tubes, conduit, wires, cables and vents. Construction joints include those used to accommodate expansion, contraction, wind, or seismic movement; firestopping material shall not interfere with the required movement of the joint.

1.4 STORAGE AND DELIVERY

Materials shall be delivered in the original unopened packages or containers showing name of the manufacturer and the brand name. Materials shall be stored off the ground and shall be protected from damage and exposure to elements. Damaged or deteriorated materials shall be removed from the site.

1.5 INSTALLER QUALIFICATIONS

Installer of firestopping material shall be trained by the manufacturer or the manufacturer's representative, and shall have a minimum of 3 years experience in the installation of firestopping of the type specified.

PART 2 - PRODUCTS

2.1 FIRESTOPPING MATERIALS

Firestopping materials shall consist of commercially manufactured products complying with the following minimum requirements:

2.1.1 Fire Hazard Classification

Material shall have a flame spread of 25 or less, and a smoke developed rating of 50 or less, when tested in accordance with ASTM E 84 or UL 723. Material shall be an approved firestopping material as listed in UL-05.

2.1.2 Toxicity

Material shall be nontoxic to humans at all stages of application.

2.1.3 Fire Resistance Rating

Firestopping will not be required to have a greater fire resistance rating than that of the assembly in which it is being placed.

2.1.3.1 Through-Penetrations

Firestopping materials for through-penetrations, as described in paragraph GENERAL REQUIREMENTS, shall provide "F" and "T" fire resistance ratings in accordance with ASTM E 814 or UL 1479, except that T Ratings are not required for penetrations smaller than or equal to a 100 mm (4 inch) nominal pipe or 0.01 square meter (16 square inches) in overall cross sectional area.

2.1.3.2 Construction Joints and Gaps

Fire resistance ratings of construction joints, as described in paragraph GENERAL REQUIREMENTS, and gaps such as those between floor slabs or roof decks and curtain walls shall be the same as the construction in which they occur.

PART 3 - EXECUTION

3.1 PREPARATION

Areas to receive firestopping shall be free of dirt, grease, oil, or loose materials which may affect the fitting or fire resistance of the firestopping system.

3.2 INSTALLATION

Firestopping material shall completely fill void spaces regardless of geometric configuration, subject to tolerance established by the manufacturer. Firestopping for filling floor voids 100 mm (4 inches) or more in any direction shall be capable of supporting the same load as the floor is designed to support or shall be protected by a permanent barrier to prevent loading or traffic in the firestopped area. Firestopping shall be installed in accordance with manufacturer's written instructions. Firestopping shall be provided in the following locations, except in floor slabs on grade:

a. Penetrations of duct, conduit, tubing, cable and pipe through floors and through fire-resistance rated walls, partitions, and ceiling-floor assemblies.

b. Penetrations of vertical shafts such as pipe chases, elevator shafts, and utility chutes.

c. Gaps at the intersection of floor slabs and curtain walls, including inside of hollow curtain walls at the floor slab.

d. Gaps at perimeter of fire-resistance rated walls and partitions, such as between the top of the walls and the bottom of roof decks.

e. Construction joints in floors and fire rated walls and partitions.

f. Other locations where required to maintain fire resistance rating of the construction.

3.3 INSPECTION

Firestopped areas shall not be covered or enclosed until inspection is complete and approved. A manufacturer's representative shall inspect the applications initially to ensure adequate preparations (clean surfaces suitable for application, etc.) and periodically during the work to assure that the completed work has been accomplished according to the manufacturer's written instructions and the specified requirements.

- - o 0 o - -

SECTION 07510A

BUILT-UP ROOFING

PART 1 - GENERAL

1.1 REFERENCES

The publications listed below form a part of this specification to the extent referenced. The publications are referred to in the text by basic designation only.

AMERICAN SOCIETY FOR TESTING AND MATERIALS (ASTM)

ASTM D 41	(1994) Asphalt Primer Used in Roofing, Dampproofing, and Waterproofing
ASTM D 226	(1994) Asphalt-Saturated Organic Felt Used in Roofing and Waterproofing
ASTM D 312	(1989) Asphalt Used in Roofing
ASTM D 1668	(1994) Glass Fabrics (Woven and Treated) for Roofing and Waterproofing
ASTM D 1863	(1993) Mineral Aggregate Used on Built-Up Roofs
ASTM D 2178	(1989) Asphalt Glass Felt Used in Roofing and Waterproofing
ASTM D 3909	(1995) Asphalt Roll Roofing (Glass Felt) Surfaced with Mineral Granules
ASTM D 4586	(1993) Asphalt Roof Cement, Asbestos Free
ASTM D 4897	(1994) Asphalt-Coated Glass-Fiber Venting Base Sheet Used in Roofing

1.2 SUBMITTALS (Not Applicable)

1.3 STORAGE OF MATERIALS

Felts, fabrics, and roll roofing shall be kept dry and shall be stored in an enclosed shelter, and stored on end one level high. Felt rolls shall be maintained at a temperature above 10 degrees C, 50 degrees F for 24 hours before laying. Aggregate shall be kept dry as defined by ASTM D 1863.

PART 2 - PRODUCTS

Roofing materials shall conform to the following requirements:

2.1 PRIMER

ASTM D 41 for asphalt roofing systems.

2.2 ASPHALT

ASTM D 312, Type II on slopes from 1/4 inch per foot up to and including 1/2 inch per foot; Type II or Type III on slopes above 1/2 inch per foot up to and including 1 inch per foot; Type III on slopes above 1 inch per foot up to and including 3 inches per foot.

2.3 BITUMINOUS CEMENT

ASTM D 4586 for use with asphalt roofing systems.

2.4 CANTS

Cants shall be not less than 4 inches high and cut to reduce change in direction of the membrane to 45 degrees or less. Cants shall be of redwood, treated with water-borne preservative, or fiberboard, treated with sizing, wax or bitumen.

2.5 FELT

2.5.1 Venting Inorganic Base Sheet

ASTM D 4897, Type II.

2.5.2 Glass Roofing Felt

ASTM D 2178, Type IV.

2.5.3 Organic Felt

ASTM D 226 for use with asphalt roofing system. Organic felts may be used only for bitumen stops, flashings, and edge envelopes.

2.6 MINERAL-SURFACED ROLL ROOFING

ASTM D 3909.

2.7 NAILS AND FASTENERS

Nails and fasteners shall be as recommended by the roofing felt manufacturer.

2.8 AGGREGATE SURFACING

Crushed stone, gravel or crushed slag; light colored and opaque, ASTM D 1863.

2.9 WOVEN GLASS FABRIC

ASTM D 1668, Type I.

PART 3 - EXECUTION

3.1 COORDINATION REQUIREMENTS

The entire roofing system, excluding flood coat and aggregate surfacing, shall be finished in one operation up to the line of termination at end of day's work. Glaze coating shall be used to waterproof completed sections when more than one day is required to finish the roofing. Phased construction will not be permitted. Application of roofing shall immediately follow application of insulation as a continuous operation. Roofing operations shall be coordinated with sheet metalwork so that sheet metal items are installed to permit continuous roof surfacing operations the same day felts are installed.

3.2 ENVIRONMENTAL CONDITIONS

Air temperature shall be above 4 degrees C, 40 degrees F and there shall be no visible ice, frost, or moisture on the roof deck at the time roofing is installed.

3.3 PREPARATION REQUIREMENTS

The substrate construction of any bay or section of the building shall be completed before roofing work is begun thereon. Roofing shall not be applied directly on concrete until the Contracting Officer determines that the concrete is dry. Vents and other items penetrating the roof shall be secured in position and properly prepared for flashing. Nailers, curbs and other items attached to roof surface shall be in place before roofing is begun.

3.4 INSTALLATION OF CANTS

Cants shall be installed in the angles formed between the roof and walls or other vertical surfaces. Cants shall be laid in a solid coat of bituminous cement just prior to laying the roofing plies. Cants shall be continuous, and shall be installed in lengths as long as practicable.

3.5 CONDITION OF SURFACES

Surfaces shall be inspected and approved immediately prior to application of roofing and flashings. The roofing and flashings shall be applied to a clean, dry, smooth and firm surface. Prior to application of primer on precast concrete decks, joints shall be covered with a 4 inch strip of roofing felt, embedded in and coated with bituminous cement.

3.6 MECHANICAL APPLICATION DEVICES

Mechanical application devices shall be mounted on pneumatic-tired wheels, and shall be designed and maintained to operate without damaging the insulation, roofing membrane, or structural components.

3.7 HEATING OF BITUMEN

Asphalt shall not be heated higher than 75 degrees F above the EVT or 50 degrees F below the flash point or 525 degrees F (maximum) whichever is lower. EVT and flash point temperatures of asphalt in the kettle shall be conspicuously posted on the kettle. Heating kettles shall be provided with automatic thermostatic controls and an accurate thermometer. Kettle operators shall be in attendance at all times during the heating to insure that the maximum temperature specified is not exceeded. Equipment utilizing flame-heat shall not be placed on the roof.

3.8 BITUMEN STOPS

Bitumen stops shall be installed at roof edges, openings and vertical projections before application of roofing plies. Bitumen stops shall be formed of two 18 inch wide strips of organic felt. Nine inches of the width shall be attached to the roof surface with 9 inches extending beyond the edge. The first strip shall be applied in a 9 inch wide layer of bituminous roofing cement and nailed 1/2 inch from the roof edge at 6 inch spacing. The second strip shall be applied to the first in a 9 inch wide mopping of bitumen. The free portion of each strip shall be protected from damage throughout the roofing period. After the roofing plies are in place, the free portion of each strip shall be folded back over the roofing membrane and embedded in a continuous coating of bituminous cement and secured with roofing nails spaced 3 inches on centers.

3.9 BITUMEN APPLICATION

Asphalt shall be applied within a range from 25 degrees F below to 25 degrees F above the EVT. Application temperatures shall be measured at the mop bucket or mechanical applicator. Bitumen at a temperature below the recommended temperature shall be returned to the kettle. Each layer of felt shall be laid in not less than 20 pounds, or more than 35 pounds, of asphalt square. Where solid moppings are required, the following requirements shall apply.

a. There shall be no overlaying voids.

b. Length of any void encapsulated in bitumen shall not exceed 1 inch.

c. Total length of all voids encapsulated in bitumen shall not exceed 2 inches in any one ply.

d. Length of any dry void shall not exceed 1/4 inch.

e. Total length of all dry voids shall not exceed 1/2 inch in any one ply.

3.10 APPLICATION OF FELTS

Felt plies shall be laid at right angles to the slope of the deck with minimum 6 inch end laps staggered at least 12 inches. The full 36 inch width of each ply shall be placed in hot bitumen immediately behind the applicator. A squeegee shall be used to eliminate air pockets and obtain complete adhesion between plies. Bitumen shall be visible beyond all edges of each ply as it is being installed. Plies shall be laid free of wrinkles, creases or fishmouths.

Each layer of roofing felt shall be carried up to the top of the cant. Workers shall not walk on mopped surfaces when the bitumen is sticky. For slopes exceeding 1/2 inch per foot, each felt ply other than venting base sheet, shall be nailed 2 inches and 6 inches from upper edge with nails spaced 12 inches on center in each row.

3.10.1 On Insulation Surfaces

Four plies of 36 inch wide glass roofing felts shall be placed shingle-fashion in solid mopped bitumen with 27 1/2 inch side laps and starter sheets 9 inches, 18 inches, 27 inches, and 36 inches wide along eaves to maintain 4 full plies throughout the roofing.

3.11 MECHANICAL FASTENING

Nails and fasteners for securing roofing shall be flush-driven through flat metal disks of not less than 1 inch diameter. Metal disks may be omitted where heads of fasteners are equivalent in size to the 1 inch diameter disks. Fasteners, when required, shall be spaced within 20 percent of the indicated spacing dimensions. There shall be no less than the total number of indicated fasteners in any 100 square feet area. Fastener pull-out resistance shall be not less than 40 pounds each.

3.12 PROTECTION OF APPLIED ROOFING

At end of day's work or whenever precipitation is imminent, the terminated edge of built-up roofing shall be sealed with two full width strips of roofing felt set in and coated with bituminous cement. One half-width of strips shall be extended up and over the finished roofing and the other half-width extended out and onto the bare roof deck. Sealing strips shall be removed before continuing installation of roofing. To facilitate sealing, termination edges may be straightened with pieces of insulation board which shall be removed when work is resumed.

3.13 FLASHINGS

Flashings shall be provided over cants in the angles formed at walls and other vertical surfaces and where required to make the work watertight. Bituminous flashings described below shall be used, except where metal flashings are specified in other sections of the specifications. Flashings shall be provided and installed immediately after the top ply of felt is placed.

3.13.1 Base Flashings

Base Flashings shall be a three-ply system using woven glass fabric with mineral surfaced roll roofing as the outer ply. The top of the base flashing shall be at least 8 inches above the roof membrane surface. Mineral surfaced roofing strips shall be cut from the width of the rolls, and shall extend from the reglet or top of curb onto the roof at least 2 inches beyond the widest flashing ply. Mineral surfaced strips shall be installed with selvage edges at right angles to the cant. Selvage laps shall be well cemented, and where possible, shall be shingled in a direction down slope or away from the prevailing wind. The top edge of all base flashing systems shall be nailed a maximum of 8 inches on center.

3.13.2 Strip Flashings

Sheet metal flashings, and gravel stops installed over the roofing top ply as required by other section of the specifications, shall be strip flashed with 2 layers of roofing felt, 9 and 12 inches wide and successively cemented in place.

3.14 AGGREGATE SURFACING

After roofing felts have been laid and flashings installed, the roof surface, except for cants, shall be flood-coated uniformly with 60 pounds of hot asphalt per square. While bitumen is still hot, aggregate surfacing materials shall be spread thereon at a rate of 400 pounds per square of gravel, 300 pounds per square of other approved surfacing aggregate.

3.15 GLAZE COAT

If there is a probability of rain falling on the felts before the flood coat and aggregate can be applied, a light glaze coat of bitumen, 10 to 15 pounds per square, shall be applied over the exposed felts. The glaze coat may be considered as part of the flood coat provided the surfacing operation is completed within 48 hours after application of the glaze coat. Where glaze coat is used, surface treatment shall be completed as soon as weather conditions permit.

- - o 0 o - -

SECTION 07600

SHEET METALWORK, GENERAL

PART 1 - GENERAL

1.1 REFERENCES

The publications listed below form a part of this specification to the extent referenced. The publications are referred to in the text by basic designation only.

SHEET METAL AND AIR CONDITIONING CONTRACTORS NATIONAL ASSOCIATION (SMACNA)

SMACNA-02 (1993) Architectural Sheet Metal Manual

1.2 GENERAL REQUIREMENTS

Sheet metalwork shall be accomplished to form weathertight construction without waves, warps, buckles, fastening stresses or distortion, and shall allow for expansion and contraction.

1.2.1 Coordination

Cutting, fitting, drilling, and other operations in connection with sheet metal required to accommodate the work of other trades shall be performed by sheet metal mechanics. Installation of sheet metal items used in conjunction with roofing shall be coordinated with roofing work to permit continuous roofing operations.

1.3 DELIVERY, STORAGE, AND HANDLING

Materials shall be adequately packaged and protected during shipment and shall be inspected for damage, dampness, and wet-storage stains upon delivery to the jobsite. Materials shall be clearly labeled as to type and manufacturer. Sheet metal items shall be carefully handled to avoid damage. Materials shall be stored in dry, ventilated areas until immediately before installation.

PART 2 - PRODUCTS

2.1 MATERIALS

Lead, lead-coated metal, and galvanized steel shall not be used. Any metal listed by SMACNA-02 for a particular item may be used, unless otherwise specified or indicated. Materials shall conform to the requirements specified below and to the thicknesses and configurations established in SMACNA-02. Different items need not be of the same metal, except that if copper is selected for any exposed item, all exposed items shall be copper.

PART 3 - EXECUTION

3.1 GENERAL

Items such as gutters, downspouts and louvers shall be fabricated in conformance with SMACNA-02 and as indicated. Unless otherwise specified or indicated, exposed edges shall be folded back to form a 1/2 inch hem on the concealed side; and bottom edges of exposed vertical surfaces shall be angled to form drips. Bituminous cement shall not be placed in contact with roofing membranes other than built-up roofing.

- - o 0 o - -

SECTION 07920A

CAULKING AND SEALANTS

PART 1 - GENERAL

1.1 REFERENCES

The publications listed below form a part of this specification to the extent referenced. The publications are referred to in the text by basic designation only.

AMERICAN ARCHITECTURAL MANUFACTURERS ASSOCIATION (AAMA)

AAMA 800-86	(1986) Voluntary Specifications and Test Methods for Sealants

AMERICAN SOCIETY FOR TESTING AND MATERIALS (ASTM)

ASTM C 834	(1976; R 1986) Latex Ceiling Compounds

FEDERAL SPECIFICATIONS (FS)

FS TT-C-00598	(Rev C; Am 1) Caulking Compound, Oil and Resin Base Type (for Building Construction)
FS TT-S-00227	(Rev E; Am 3) Sealing Compound: Elastomeric Type, Multi-Component (for Caulking, Sealing, and Glazing in Buildings and Other Structures)
FS TT-S-00230	(Rev C; Am 2) Sealing Compound: Elastomeric Type, Single Component (for Caulking, Sealing, and Glazing in Buildings and Other Structures)
FS TT-S-001657	(Basic) Sealing Compound, Single Component, Butyl Rubber Based, Solvent Release Type (for Buildings and Other Types of Construction)

1.2 GENERAL REQUIREMENTS

Caulking and sealants shall be provided in joints as indicated or specified. The joint design, shape, and spacing shall be as indicated. Mixing shall be in accordance with instructions provided by the manufacturer of the sealants.

1.3 SUBMITTALS

Government approval is required for submittals with a "GA" designation; submittals having an "FIO" designation are for information only. The following shall be submitted in accordance with Section 01330 - SUBMITTAL PROCEDURES:

SD-01 Data

Materials; GA.

Manufacturer's descriptive data including backstop material, primer and sealer. Descriptive data for elastomeric sealants shall include shelf life, curing time, and mixing instructions for two component sealants.

SD-13 Certificates

Materials; FIO.

Certificates of compliance stating that the caulking and sealants conform to the specified requirements. Certificates shall include laboratory test reports showing that the caulking and sealants have been tested within the last 12 months.

1.4 ENVIRONMENTAL REQUIREMENTS

The ambient temperature shall be within the limits of 39 degrees F to 90 degrees F when the caulking and sealants are applied.

1.5 DELIVERY AND STORAGE

Materials shall be delivered to the job in the manufacturer's original unopened containers. Caulking compound or components outdated as indicated by shelf life shall not be used. Materials shall be carefully handled and stored to prevent inclusion of foreign materials or exposure to temperatures exceeding 90 degrees F. Sealant tape shall be handled and stored in a manner that will not deform the tape.

PART 2 - PRODUCTS

2.1 MATERIALS

2.1.1 No. 1 Caulking Compound

No. 1 caulking compound shall conform to FS TT-C-00598, Type I.

2.1.2 No. 2 Sealant

No. 2 sealant shall be a two-component, elastomeric-type compound conforming to FS TT-S-00227, Type II, Class A. The compound shall be supplied in pre-measured kit form for on-the-job mixing.

2.1.3 No. 3 Sealant

No. 3 sealant shall be a single-component conforming to FS TT-S-001657, Type I or II.

2.1.4 No. 4 Sealant

No. 4 sealant shall be a one-component, elastomeric-type compound conforming to FS TT-S-00230, Type II, Class A.

2.1.5 No. 6 Sealant

No. 6 sealant shall be a one-component latex sealing compound conforming to ASTM C 834.

2.1.6 No. 7 Sealant

No. 7 sealant shall be a polyisobutylene-based or isoprene-isobutylene-based pressure-sensitive tape or bead as specified or shown, conforming to Section 807.1 of AAMA 800-86.

2.1.7 No. 10 Sealant

No. 10 sealant shall be treated-type foamed-urethane strip saturated with a butylene waterproofing material or asphalt-impregnated foamed-polyurethane strip and shall be capable of sealing out moisture and weather when compressed to the extent recommended by the manufacturer for the capability of the joint. The sealant shall be furnished in the proper width to obtain the degree of compression required when installed in the joint.

2.1.8 Acoustical Sealant

Synthetic rubber or polymeric-based material shall be nonhardening type with lasting resilience and able to absorb normal movement without adhesive failure.

2.2 SEALER

Sealer for use with No. 1 caulking compound shall be aluminum paint.

2.3 PRIMER

Primer for No. 2, 3, or 4 sealant shall be as recommended by the sealant manufacturer.

2.4 BACKSTOP MATERIAL

Backstop materials shall be as recommended by the sealant manufacturer.

2.5 BOND-PREVENTIVE MATERIALS

Bond-preventive materials shall be pressure-sensitive adhesive polyethylene tape, aluminum foil or wax paper. At the option of the Contractor, backstop material with bond breaking characteristics may be installed in lieu of bond-preventive materials specified.

PART 3 - EXECUTION

3.1 SURFACE PREPARATION

3.1.1 General

The surfaces of joints to be sealed shall be dry. Oil, grease, dirt, chalk, particles of mortar, dust, loose rust, loose mill scale, and other foreign substances shall be removed from all joint surfaces to be sealed. Oil and grease shall be removed with solvent and surfaces shall be wiped with clean cloths.

3.1.2 Concrete and Masonry Surfaces

Where surfaces have been treated with curing compounds, oil, or other such materials, the materials shall be removed by sandblasting or wire brushing. Laitance, efflorescence and loose mortar shall be removed from the joint cavity.

3.1.3 Steel Surfaces

Steel surfaces to be in contact with sealant shall be sandblasted or, if sandblasting would not be practical or would damage adjacent finish work, the metal shall be scraped and wire brushed to remove loose mill scale. Protective coatings on steel surfaces shall be removed by sandblasting or by a solvent that leaves no residue.

3.1.4 Aluminum Surfaces

Aluminum surfaces of windows and door frames in contact with sealants shall be cleaned of temporary protective coatings. When masking tape is used for a protective cover, the tape and any residual adhesive shall be removed just prior to applying the sealant. Solvents used to remove protective coating shall be as recommended by the manufacturer of the aluminum work and shall be nonstaining.

3.2 APPLICATION

3.2.1 Paper Masking Tape

Paper masking tape shall be placed on the finish surface on one or both sides of a joint cavity to protect adjacent finish surfaces from primer or compound smears. Masking tape shall be removed within 10 minutes after joint has been filled and tooled.

3.2.2 Bond-Preventive Materials

Bond-preventive materials for No. 2, 3, and 4 sealant shall be installed on the bottom of the joint cavity and other surfaces indicated to prevent the sealant from adhering to the surfaces covered by the bond-preventive materials. The materials shall be carefully applied to avoid contamination of adjoining surfaces or breaking bond with surfaces other than those covered by the bond-preventive materials.

3.2.3 Backstops

The back or bottom of joints constructed deeper than indicated shall be packed tightly with backstop material to provide a joint of the depth indicated. Where necessary to provide a backstop for caulking compound, the joint shall be packed tightly with rope yarn.

3.2.4 Primer

Primer shall be used on concrete masonry units, wood, or other porous surfaces in accordance with instructions furnished with the sealant. Primer shall be applied to the joint surfaces to be sealed. Surfaces adjacent to joints shall not receive primer.

3.2.5 Caulk and Sealant

Caulk and sealant shall be applied as recommended by the manufacturer.

3.3 CLEANING

The surfaces adjoining the caulked and sealed joints shall be cleaned of smears and other soiling resulting from the caulking and sealing application as work progresses.

- - o 0 o - -

SECTION 08110A

STEEL DOORS AND FRAMES

PART 1 - GENERAL

1.1 REFERENCES

The publications listed below form a part of this specification to the extent referenced. The publications are referred to in the text by basic designation only.

AMERICAN SOCIETY FOR TESTING AND MATERIALS (ASTM)

ASTM C 236	(1989; R 1993) Steady-State Thermal Performance of Building Assemblies by Means of a Guarded Hot Box
ASTM C 976	(1990) Thermal Performance of Building Assemblies by Means of a Calibrated Hot Box
ASTM D 2863	(1991) Measuring the Minimum Oxygen Concentration to Support Candle-Like Combustion of Plastics (Oxygen Index)
ASTM E 152	(1981a) Fire Tests of Door Assemblies
ASTM E 283	(1991) Determining the Rate of Air Leakage Through Exterior Windows, Curtain Walls, and Doors Under Specified Pressure Differences Across the Specimen

DOOR AND HARDWARE INSTITUTE (DHI)

DHI-A115.IG	(1994) Installation Guide for Doors and Hardware

NATIONAL ASSOCIATION OF ARCHITECTURAL METAL MANUFACTURERS (NAAMM)

NAAMM HMMA 863	1987) Hollow Metal Manual; Section: Guide Specifications for Commercial Security Hollow Metal Doors and Frames

NATIONAL FIRE PROTECTION ASSOCIATION (NFPA)

NFPA 80	(1992) Fire Doors and Windows
NFPA 80A	(1993) Protection of Buildings from Exterior Fire Exposures
NFPA 101	(1994) Safety to Life from Fire in Buildings and Structures

STEEL DOOR INSTITUTE (SDOI)

SDOI SDI-100	(1991) Standard Steel Doors and Frames
SDOI SDI-107	(1984) Hardware on Steel Doors (Reinforcement - Application)

1.2 SUBMITTALS

Government approval is required for submittals with a "GA" designation; submittals having an "FIO" designation are for information only. The following shall be submitted in accordance with Section 01330 - SUBMITTAL PROCEDURES:

SD-13 Certificates

Fire Rated Doors; GA.

Thermal Insulated Doors; GA.

Security Doors; GA.

a. Certification of Oversized Fire Doors: Certificates of compliance in accordance with the requirements of ASTM E 152 for fire doors exceeding the sizes for which label service is available.

b. Certification of Security Door, Thermal Insulating Rating: Certification or test report for doors shall show compliance with the specified requirements. The certification, or test report, shall list the parameters and the type of hardware and perimeter seals used to achieve the rating.

1.3 DELIVERY AND STORAGE

Materials shall be delivered to the site and shall be stored in an upright position in accordance with DHI-A115.IG.

1.4 WARRANTY

Manufacturer's standard performance guarantees or warranties that extend beyond a 1 year period shall be provided.

PART 2 - PRODUCTS

2.1 DOORS AND FRAMES

Doors and frames shall be factory fabricated in accordance with SDOI SDI-100 and the additional requirements specified herein. Door grade shall be extra heavy duty (Grade III), Model 2A, seamless construction. Exterior doors and frames shall be designation G60 galvanized. Doors and frames shall be prepared to receive hardware conforming to the templates and information provided under Section 08700 - BUILDERS' HARDWARE. Frames shall be welded type located as shown. Door frames shall be furnished with a minimum of three jamb anchors and one floor anchor per jamb. Anchors shall be not less than 18 gauge) steel or 7 gauge diameter wire. For wall conditions that do not allow the use of a floor anchor, an additional jamb anchor shall be provided. Rubber silencers shall be furnished for installation into factory predrilled holes in door

frames. Exterior doors shall have top edges closed flush and sealed against water penetration.

2.2 FIRE RATED DOORS

Fire rated door assemblies shall bear the listing identification label of a nationally recognized testing laboratory qualified to perform tests of fire door assemblies in accordance with ASTM E 152 and having a listing for the tested assemblies. The fire resistance rating shall be rated as shown. Listing identification labels shall be permanently applied by a method which results in their destruction should they be removed.

2.3 THERMAL INSULATED DOORS

Thermal insulated doors shall be filled with rigid plastic foam permanently bonded to each face panel. The thermal conductance (U-value) through the door shall not exceed 0.41 btu/hr times sq f times f when tested as an operational assembly in accordance with ASTM C 236 or ASTM C 976. Doors with cellular plastic cores shall have a minimum oxygen index rating of 22 percent when tested in accordance with ASTM D 2863.

2.4 SECURITY DOORS

Security type doors and frames shall be factory fabricated in accordance with NAAMM HMMA 863 and the additional requirements specified herein. Doors and frames shall be galvanized 10 gauge construction. Doors shall have 12 gauge steel plate on both sides, and be internally reinforced vertically with continuous 18 gauge steel stiffeners spaced 6 inches on center. Doors shall be fully welded construction with no visible seams or joints. Door thickness shall be 1-3/4 inches. Exterior doors shall be insulated to provide a thermal conductance (U-value) not to exceed 0.41 btu/hr times sq f times f when tested as an operational assembly in accordance with ASTM C 236 or ASTM C 976. Doors with cellular plastic cores shall have a minimum oxygen index rating of 22 percent when tested in accordance with ASTM D 2863. Door frames shall be all welded type, with double rabbet jamb profile. At meeting stiles, an astragal shall be provided by extending the face panel of the active leaf not less than 5/8 inch across the gap between the two leaves. Astragal shall be flush with the face panel of the inactive leaf.

2.5 WEATHERSTRIPPING

Unless otherwise specified in Section 08700 - BUILDERS' HARDWARE, weatherstripping shall be as follows: Weatherstripping for head and jamb shall be manufacturer's standard elastomeric type. Air leakage rate of weatherstripping shall not exceed 0.20 cfm per linear foot of crack when tested in accordance with ASTM E 283 at standard test conditions.

2.6 TRANSOM AND SIDELIGHT PANELS

Panels for sidelight shall be constructed in accordance with SDOI SDI-100. Panels shall be nonremovable from the outside of exterior doors or the unsecure side of interior doors.

2.7 GLAZING

Glazing shall be as specified in Section 08810 - GLASS AND GLAZING . Removable glazing beads shall be tamper proof security type.

2.8 FACTORY FINISH

Doors and frames shall be phosphatized , and primed with standard factory primer system. Color shall be field applied as scheduled in the drawings.

PART 3 - EXECUTION

3.1 INSTALLATION

Installation shall be in accordance with DHI-A115.IG. Preparation for surface applied hardware shall be in accordance with SDOI SDI-107. Rubber silencers shall be installed in door frames after finish painting has been completed; adhesively applied silencers are not acceptable. Installation and operational characteristics of fire doors shall be in accordance with NFPA 80, NFPA 80A and NFPA 101. Hollow metal door frames shall be solid grouted in masonry walls.

3.2 FIELD PAINTED FINISH

Steel doors and frames shall be field painted in accordance with Section 09900 - PAINTING, GENERAL. Weatherstrips shall be protected from paint. Color shall be as scheduled.

- - o 0 o - -

SECTION 08318

SECURITY-VAULT DOOR

PART 1 - GENERAL

1.1 REFERENCES

The publications listed below form a part of this specification to the extent referenced. The publications are referred to in the text by basic designation only.

FEDERAL SPECIFICATIONS (FS)

FS AA-D-00600 (Rev C) Door, Vault, Security

1.2 GENERAL REQUIREMENTS

The existing vault door unit shall be removed and relocated from its present location in the existing Entry Control facility.

1.3 SUBMITTALS

Government approval is required for submittals with a "GA" designation; submittals having an "FIO" designation are for information only. The following shall be submitted in accordance with Section 01330 SUBMITTAL PROCEDURES:

SD-13 Certificates

Security Vault Door; FIO.

Certification shall state that vault-door units that do not bear the GSA label are constructed and installed to Class 5 standards.

1.4 DELIVERY AND STORAGE

Door and frame assemblies shall be disassembled, and stored at the jobsite in a protective covering. Materials delivered to the jobsite shall be inspected for damage, and unloaded with a minimum of handling. Storage shall be in a dry location with adequate ventilation, free from dust, water, and other contaminants, and which permits easy access for inspection and handling. Door assemblies shall be stored off the floor on nonabsorptive strips or wood platforms. Doors and frames shall be handled carefully to prevent damage. Damaged items that cannot be restored to like-new condition shall be replaced.

PART 2 - PRODUCTS

2.1 VAULT DOOR AND FRAME

The existing vault door shall be reused as indicated on the drawings.

PART 3 - EXECUTION

3.1 INSTALLATION

The vault door manufacturer shall be contacted for instructions and drawings for the relocation. The vault door assembly shall be installed in strict compliance with the printed instructions and drawings provided by the original manufacturer.

- - o 0 o - -

SECTION 08510A

STEEL WINDOWS

PART 1 - GENERAL

1.1 REFERENCES

The publications listed below form a part of this specification to the extent referenced. The publications are referred to in the text by basic designation only.

AMERICAN SOCIETY FOR TESTING AND MATERIALS (ASTM)

ASTM A 123	(1989a) Zinc (Hot-Dip Galvanized) Coatings on Iron and Steel Products
ASTM B 633	(1985; R 1994) Electrodeposited Coatings of Zinc on Iron and Steel
ASTM C 236	(1989; R 1993) Steady-State Thermal Performance of Building Assemblies by Means of a Guarded Hot Box

NATIONAL FIRE PROTECTION ASSOCIATION (NFPA)

NFPA 80	(1992) Fire Doors and Windows
NFPA 101	(1994) Safety to Life from Fire in Buildings and Structures

STEEL WINDOW INSTITUTE (SWI)

SWI-01	(1989) The Specifier's Guide to Steel Windows

1.2 WINDOW PERFORMANCE

Steel windows shall meet the following performance requirements, for the type and size indicated. Fire-rated windows shall bear the Underwriters Laboratories, Warnock Hersey, Factory Mutual or other nationally recognized testing laboratory label for the indicated rating. Structural test pressures, air infiltration, and water penetration shall not exceed the amounts established by SWI-01. Thermal resistance shall meet requirements established by ASTM C 236. Windows shall conform to NFPA 101 when rescue and/or second means of escape are indicated.

1.3 SUBMITTALS

Government approval is required for submittals with a "GA" designation; submittals having an "FIO" designation are for information only. The following shall be submitted in accordance with Section 01330 - SUBMITTAL PROCEDURES:

SD-01 Data

Steel Windows; GA.

Manufacturer's descriptive data, catalog cut sheets, preprinted installation instructions, and cleaning instructions.

1.4 QUALIFICATION

Window manufacturer shall specialize in designing and manufacturing the type of steel windows specified, and shall have a minimum of 5 years of documented successful experience.

1.5 DELIVERY AND STORAGE

Steel windows shall be delivered to project site and stored in accordance with manufacturer's recommendations.

PART 2 - PRODUCTS

2.1 STEEL WINDOW TYPES

Steel windows shall be complete units including sash, frame, weatherstripping security glazing, and hardware. Steel windows shall be designed for outside factory glazing, and for glass types scheduled on drawings and specified in Section 08810 - GLASS AND GLAZING. Units shall be complete to meet requirements of paragraph WINDOW PERFORMANCE and SWI-01.

2.1.1 Fire-Rated Windows

Fire-rated windows shall conform to SWI-01 and shall be labeled with a 3/4 hour fire-test rating. Units shall conform to NFPA 80 requirements.

2.2 FINISHES

2.2.1 Prime Coat

Steel windows and associated parts shall be factory-primed with manufacturer's standard primer coat.

2.2.2 Baked Enamel

Finish steel windows shall be coated with a baked-on polyester enamel. Color shall be in accordance with as scheduled.

PART 3 - EXECUTION

3.1 INSTALLATION

Steel windows shall be installed and cleaned in accordance with manufacturer's approved recommendations. Fire-rated windows shall be installed in compliance with NFPA 80 and NFPA 101. The completed window installation shall be watertight and in accordance with Section 07920A - CAULKING AND SEALANTS.

Glazing shall be installed in accordance with Section 08810 - GLASS AND GLAZING. Fire-rated windows shall be glazed in accordance with NFPA 80.

- - o 0 o - -

SECTION 08700A

BUILDERS' HARDWARE

PART 1 - GENERAL

1.1 REFERENCES

The publications listed below form a part of this specification to the extent referenced. The publications are referred to in the text by basic designation only.

AMERICAN SOCIETY FOR TESTING AND MATERIALS (ASTM)

ASTM E 283	(1991) Determining the Rate of Air Leakage Through Exterior Windows, Curtain Walls and Doors Under Specified Pressure Differences Across the Specimen

BUILDERS HARDWARE MANUFACTURERS ASSOCIATION (BHMA)

BHMA A156.1	(1988) Butts and Hinges
BHMA A156.2	(1989) Bored and Preassembled Locks and Latches
BHMA A156.3	(1994) Exit Devices
BHMA A156.4	(1992) Door Controls - Closers
BHMA A156.5	(1992) Auxiliary Locks & Associated Products
BHMA A156.6	(1986) Architectural Door Trim
BHMA A156.7	(1988) Template Hinge Dimensions
BHMA A156.8	(1994) Door Controls - Overhead Holders
BHMA A156.13	(1994) Mortise Locks & Latches
BHMA A156.15	(1986) Closer Holder Release Devices
BHMA A156.16	(1989) Auxiliary Hardware
BHMA A156.18	(1987) Materials and Finishes
BHMA A156.21	(1989) Thresholds

DOOR AND HARDWARE INSTITUTE (DHI)

DHI-02	(1986) Installation Guide for Doors and Hardware
DHI-04	(1976) Recommended Locations for Builders' Hardware for Custom Steel Doors and Frames
DHI-05	(1990) Recommended Locations for Architectural Hardware for Standard Steel Doors and Frames
DHI A115-W	(1993) Wood Door Hardware Standards (Incl A115-W1 thru A115-W9)

FEDERAL STANDARDS (FED-STD)

FED-STD 795	(Basic) Uniform Federal Accessibility Standards

NATIONAL FIRE PROTECTION ASSOCIATION (NFPA)

NFPA 80	(1992) Fire Doors and Windows
NFPA 101	(1994) Safety to Life from Fire in Buildings and Structures
NFPA 105	(1993) Smoke-Control Door Assemblies

1.2 SUBMITTALS

Government approval is required for submittals with a "GA" designation; submittals having an "FIO" designation are for information only. The following shall be submitted in accordance with Section 01330 - SUBMITTAL PROCEDURES:

SD-01 Data

Hardware and Accessories; GA.

Manufacturer's descriptive data, technical literature, catalog cuts, and installation instructions. Spare parts data for locksets, exit devices, closers, electric locks, electric strikes, electro-magnetic closer holder release devices, and electric exit devices, after approval of the detail drawings, and not later than 1 month(s) prior to the date of beneficial occupancy. The data shall include a complete list of parts and supplies, with current unit prices and source of supply.

1.3 DELIVERY, STORAGE, AND HANDLING

Hardware shall be delivered to the project site in the manufacturer's original packages. Each article of hardware shall be individually packaged in the manufacturer's standard commercial carton or container, and shall be properly marked or labeled to be readily identifiable with the approved hardware schedule.

1.4 SPECIAL TOOLS

Special tools, such as those supplied by the manufacturer, shall be provided as required to adjust hardware items.

1.5 Keying Schedule

Keying schedule shall be developed in accordance with DHI-03, after the keying meeting with the user. Keying meeting shall be arranged nb the Contractor and shall include the hardware subcontractor, user representative and Contracting officer.

PART 2 - PRODUCTS

2.1 GENERAL HARDWARE REQUIREMENTS

Hardware shall conform to the requirements specified herein and the HARDWARE SETS listing at the end of this section. Hardware items providing accessibility and usability for physically handicapped shall comply with FED-STD 795.

2.2 TEMPLATES

Templates of hinges shall conform to BHMA A156.7.

2.3 HINGES

Hinges shall conform to BHMA A156.1. Hinges used on metal doors and frames shall also conform to BHMA A156.7.

2.3.1 Hinges for Reverse Bevel Doors with Locks

Hinges for reverse bevel doors with locks shall have pins that are made nonremovable by means such as a set screw in the barrel, or safety stud, when the door is in the closed position.

2.3.2 Contractor's Option

Hinges with antifriction bearings may be furnished in lieu of ball bearing hinges, except where prohibited for fire doors by the requirements of NFPA 80.

2.4 LOCKS AND LATCHES

To the maximum extent possible, locksets, latchsets and deadlocks shall be the products of a single manufacturer. Knob diameter shall be 2-1/8 to 2-1/4 inches.

2.4.1 Mortise Lock and Latchsets

Mortise lock, latchsets, and strikes shall be series 1000 and shall conform to BHMA A156.13, operational Security Grade 1.

2.4.2 Auxiliary Locks and Associated Products

Mortise deadlocks and latchsets, narrow style locks, rim locks, and electric strikes shall conform to BHMA A156.5.

2.4.3 Lock Cylinders

Lock cylinders shall comply with BHMA A156.5. Lock cylinder shall have not less than seven pins. Cylinders shall have key removable type cores. An extension of the existing keying system shall be provided. The existing locks were manufactured by Arrow and have interchangeable cores. Construction interchangeable cores shall be provided. Disassembly of knob or lockset shall not be required to remove core from lockset. All locksets, exit devices, and padlocks shall accept same interchangeable cores.

2.4.4 Push/Pull Latches

2.4.5 Lock Trim

Lock trim shall be cast, forged, or heavy wrought construction of commercial plain design. In addition to meeting the test requirement of BHMA A156.2 or BHMA A156.13, knobs, lever handles, roses, and escutcheons shall be 0.050 inch thick, if unreinforced. If reinforced, the outer shell shall be 0.035 inch thick and the combined thickness shall be 0.070 inch except that knob shanks shall be 0.060 inch thick.

2.5 EXIT DEVICES AND EXIT DEVICE ACCESSORIES

Exit devices and exit device accessories shall conform to BHMA A156.3, Grade 1. Door coordinator with carry bar shall be Type 21 and shall be provided for each pair of doors equipped with an overlapping astragal.

2.6 KEYING

Locks shall be keyed in sets or subsets as scheduled. Locks shall be furnished with the manufacturer's standard construction key system. Change keys for locks shall be stamped with change number and the inscription "U.S. Property - Do Not Duplicate." Keys shall be supplied as follows:

Locks:	2 change keys each lock.
Master keyed sets:	2 keys each set.
Grand master keys:	2 total.
Construction keys:	as required

The keys shall be furnished to the Contracting Officer arranged in a container for key control system storage in sets or subsets as scheduled.

2.7 DOOR CLOSING DEVICES

Door closing devices shall conform to BHMA A156.4, Grade 1. Closing devices shall be products of one manufacturer for each type specified.

Surface type closers shall be Grade 1, Series C02000 Full Cover with options PT-4H, Size 1 or 2 through Size 6, and PT-4D with back check position valve. Closers for doors close to a wall shall be of narrow projection so as not to strike the wall at the 90-degree open position.

2.8 DOOR CONTROLS - OVERHEAD HOLDERS

Door controls - overhead holders shall conform to BHMA A156.8.

2.9 SMOKE DETECTORS AND MAGNETIC HOLDERS

Smoke detectors and magnetic holders shall conform to Section 16721 - FIRE DETECTION AND ALARM SYSTEM and BHMA A156.15.

2.10 ARCHITECTURAL DOOR TRIM

Architectural door trim shall conform to BHMA A156.6.

2.10.1 Door Protection Plates

2.10.1.1 Kick Plates

Kick plates shall be Category J100, stainless steel. Width of plates shall be 2 inches less than door width for single doors and 1 inch less for pairs of doors. Height shall be 16 inches, except where the bottom rail is less than 16 inches the plate shall extend to within 1/2 inch of the panel mold or glass bead.

2.10.1.2 Mop Plates

Mop plates shall be Category J100, stainless steel. Width of plates shall be 2 inches less than door width for single doors and 1 inch less for pairs of doors. The height shall be 4 inches.

2.10.2 Combination Push-Pull Plates

Combination push-pull plates shall be Category J300, 1/8 inch thick minimum stainless steel beveled four edges.

2.10.3 Door Pulls and Push/Pull Units

2.10.3.1 Arm Pulls

Arm pulls shall be Category J400, double base, stainless steel.

2.11 AUXILIARY HARDWARE

Auxiliary hardware, consisting of door holders, and door stops, shall conform to BHMA A156.16. Lever extension flush bolts shall be Type L14081. Dust-proof strikes shall be Type L04011 for doors that are not fire rated. Dust-proof strikes shall be Type L04021 for fire rated doors.

2.12 MISCELLANEOUS

2.12.1 Metal Thresholds

Thresholds shall conform to BHMA A156.21. Thresholds for exterior doors shall be extruded aluminum of the type indicated and shall provide proper clearance and an effective seal with specified weather stripping. Air leakage rate of weatherstripping shall not exceed 0.5 cubic feet per minute per lineal foot of crack when tested in accordance with ASTM E 283 at standard test conditions.

2.12.2 Rain Drips

Extruded aluminum, not less than 0.07 inch thick, mill finished. Door sill rain drips shall be 1-1/2 inches to 1-3/4 inches high by 5/8 inch projection. Overhead rain drips shall be approximately 1-1/2 inches high by 2-1/2 inches projection and shall extend 2 inches on either side of the door opening width.

2.12.3 Aluminum Housed Type Weatherseals

Weatherseals of the type indicated shall consist of extruded aluminum retainers not less than 0.07 inch wall thickness with vinyl, neoprene, silicone rubber, polyurethane or vinyl brush inserts. Aluminum shall be clear (natural) anodized. Weatherseal material shall be of an industrial/commercial grade. Air leakage rate of weatherstripping shall not exceed 0.5 cubic foot

per minute per lineal foot of crack when tested in accordance with ASTM E 283 at standard test conditions.

2.12.4 Gasketing

Gasketing shall be a compression type seal, silicon based, self-adhesive product for use on steel door frames with steel doors for 45 minute C-label. Color shall be bronze. Air leakage rate of weatherstripping shall not exceed 0.5 cubic foot per minute per lineal foot of crack when tested in accordance with ASTM E 283 at standard test conditions.

2.12.5 Key Control Storage System

Key control storage system shall conform to BHMA A156.5, Type E8341, capacity 125, and shall be properly labeled for key identification.

2.13 FASTENINGS

Fastenings of proper type, size, quantity, and finish shall be supplied with each article of hardware.

2.14 FINISHES

Unless otherwise specified, finishes shall conform to those identified in BHMA A156.18. Where painting of primed surfaces is required, painting is specified in Section 09900 - PAINTING, GENERAL.

2.15 HARDWARE FOR FIRE DOORS

Hardware for fire doors shall conform to the requirements of NFPA 80 and NFPA 101.

PART 3 - EXECUTION

3.1 APPLICATION

Hardware shall be located in accordance with DHI-04 and DHI-05. When approved, slight variations in locations or dimensions will be permitted. Application shall be in accordance with DHI-02 or DHI A115-W.

3.1.1 Hardware for Fire Doors and Smoke-Control Door Assemblies

Hardware for fire doors shall be installed in accordance with the requirements of NFPA 80. Exit devices installed on fire doors shall have a visible label bearing the marking "Fire Exit Hardware". Hardware for smoke-control door assemblies shall be installed in accordance with NFPA 105.

3.1.2 Key Control Storage Systems

Key control storage system shall be furnished to the Contracting Officer.

3.1.3 Weatherseals

Weatherseals shall be located as indicated, snug to door face and fastened in place with color matched metal screws after door and frames have been finish painted. Screw spacing shall be as recommended by manufacturer.

3.1.4 Gasketing

Gasketing shall be installed at the inside edge of the hinge and head and latch sides of door frame. Frames shall be toleranced for a 1/8 inch clearance between door and frame. Frames shall be treated with tape primer prior to installation.

3.2 OPERATIONAL TESTS

Prior to acceptance of any electrical hardware system, an operational test shall be performed to determine if devices are operating as intended by the specifications. Wiring shall be tested for correct voltage, current carrying capacity, and proper grounding. Stray voltages in lock wiring shall be eliminated to prevent locking devices from releasing in critical situations.

3.3 HARDWARE SETS

HW-1 DOOR # 100FC, 102FC, 103FC, 104FC, 100PV, 102PV SECURITY, HANDICAP

1 1/2-PR	HINGES A5111 NRP, 612, HINGE STRAPS INSIDE, 2 PAIR ANTI-INTRUSION BOLTS
2 EA	EXIT DEVICE TYPE 1, FUNCTION 04, STEEL PLATE REINFORCED LATCH CATCHES
2 EA	CLOSERS C02021, PT4C, PT4D, PT4F, PT4H, BARRIER FREE
2 EA	KICK PLATES, J102, 10", BEVELED
1 EA	THRESHOLD, J16130, 36"
2 EA	DOOR BOTTOM, PEMKO 222 DV OR EQUAL
1 SET	WEATHERSTRIPPING

HW-2 DOORS #112PV, 113PV, 113FC, 114FC (TOILET ROOMS), HANDICAP

1 1/2 PR	HINGES A8112 NRP
1 EA	PADDLE TYPE LATCH
1 EA	CLOSER C02021, PT4F, PT4C, PT4D, BARRIER FREE
2 EA	KICK PLATES, J102, 10", BEVELED
1 EA	DOOR STOP, ROCKWOOD 462 OR EQUAL
1 SET	SILENCERS

HW-3 DOOR #101FC, 101PV, 103PV

1 1/2 PR	HINGES A5112 NRP
1 EA	LOCKSET F44, STEEL PLATE REINFORCED LATCH CATCHES
1 EA	HEAVY DUTY STRIKE COVER PLATE
1 EA	OVERHEAD STOP/HOLDER C02551
2 EA	KICK PLATE, J102, 10", BEVELED
1 EA	THRESHOLD J030129, 36"
1 EA	DOOR BOTTOM WITH INTEGRAL DRIP
1 SET	WEATHERSTRIPPING
1 EA	DRIP, HEAD & SILL

HW-4 DOOR #108FC, 115FC, 112FC, 106FC, 104PV, 105PV

1 1/2 PR	HINGE A8112 NRP
1 EA	LOCKSET, F44 GRADE 1
1 EA	ELECTRIC STRIKE (DOORS #110FC AND #112FC ONLY)
1 EA	CLOSER C02021, PT4C, PT4D
1 EA	DOOR STOP, ROCKWOOD 462 OR EQUAL
2 EA	ARMORPLATE, J101, BEVELED
1 SET	SMOKE GASKET

HW-5 DOOR #107PV, 108PV, 109PV

3 EA	SECURITY HINGE 4-1/2FM-ICS, NRP, HOSPITAL TIP, FOLGER-ADAMS, OR EQUAL.
1 EA	SECURITY LOCKSET, D9336LT, FOLGER-ADAMS, OR EQUAL.
1 EA	SECURITY CLOSER HS7800 X SNI X TORX
1 EA	DOOR STOP, ROCKWOOD 462 OR EQUAL
1 SET	SMOKE GASKET

HW-6 DOOR #106PV, 114PV, 115PV, 116PV, 116A PV

3 EA	SECURITY HINGE 4-1/2FM-ICS, NRP, HOSPITAL TIP, FOLGER-ADAMS, OR EQUAL.
1 EA	SECURITY LOCKSET, D9378LT, FOLGER-ADAMS, OR EQUAL.
1 EA	ELECTRIC STRIKE (DOORS #116PV AND 116A PV ONLY)
1 EA	SECURITY CLOSER HS7800 X SNI X TORX
1 EA	DOOR STOP, ROCKWOOD 462 OR EQUAL
1 SET	SMOKE GASKET

HW-7 DOORS #105FC, 109FC, 110FC, 111FC

1 1/2 PR	HINGES A8112 NRP
1 EA	LOCKSET, F42 GRADE 1
1 EA	ELECTRIC STRIKE (DOOR # 111FC ONLY)
1 EA	CLOSER C02021, PT4A, PT4D, PT4H, PT4F
1 EA	DOOR STOP, ROCKWOOD 462 OR EQUAL

2 EA	KICKPLATE, J102, 10", BEVELED
1 SET	SILENCERS

<u>HW-8</u> DOOR # 110PV

2 EA	HINGES A8112 NRP
1 EA	LOCKSET, F37 GRADE 1
1 SET	SILENCERS

- - o 0 o - -

SECTION 08810

GLASS AND GLAZING

PART 1 - GENERAL

1.1 REFERENCES

The publications listed below form a part of this specification to the extent referenced. The publications are referred to in the text by basic designation only.

AMERICAN NATIONAL STANDARDS INSTITUTE (ANSI)

ANSI Z97.1	(1984; R 1994) Safety Performance Specifications and Methods of Test for Safety Glazing Materials in Buildings

AMERICAN SOCIETY FOR TESTING AND MATERIALS (ASTM)

ASTM C 509	(1994) Elastomeric Cellular Preformed Gasket and Sealing Material
ASTM C 669	(1995) Glazing Compounds for Back Bedding and Face Glazing of Metal Sash
ASTM C 864	(1993) Dense Elastomeric Compression Seal Gaskets, Setting Blocks, and Spacers
ASTM C 920	(1994) Elastomeric Joint Sealants
ASTM C 1036	(1991) Flat Glass
ASTM C 1048	(1992) Heat-Treated Flat Glass - Kind HS, Kind FT Coated and Uncoated Glass
ASTM C 1172	(1991) Laminated Architectural Flat Glass
ASTM C 1349	(1996) Architectural Flat Glass Clad Polycarbonate
ASTM D 395	(1989; R 1994) Rubber Property - Compression Set
ASTM E 119	(1995a) Fire Tests of Building Construction and Materials
ASTM E 773	(1988) Seal Durability of Sealed Insulating Glass Units
ASTM E 774	(1992) Sealed Insulating Glass Units
ASTM E 1300	(1994) Determining the Minimum Thickness and Type of Glass Required to Resist a Specified Load

AMERICAN SOCIETY OF CIVIL ENGINEERS (ASCE)

ASCE 7	(1995) Minimum Design Loads for Buildings and Other Structures

CODE OF FEDERAL REGULATIONS (CFR)

16 CFR 1201	Safety Standard for Architectural Glazing Materials

COMMERCIAL ITEM DESCRIPTION (CID)

CID A-A-378	(Basic) Putty: Linseed Oil Type, (for Wood-Sash-Glazing)

GLASS ASSOCIATION OF NORTH AMERICA (GANA)

GANA-01	(1990) Glazing Manual
GANA-04	(1995) Engineering Standards Manual

NATIONAL FIRE PROTECTION ASSOCIATION (NFPA)

NFPA 80	(1995) Fire Doors and Windows
NFPA 252	(1995) Fire Tests of Door Assemblies
NFPA 257	(1996) Fire Tests for Window and Glass Block Assemblies

1.2 SUBMITTALS

Government approval is required for submittals with a "GA" designation; submittals having an "FIO" designation are for information only. The following shall be submitted in accordance with Section 01330 - SUBMITTAL PROCEDURES:

SD-01 Data

Glass; FIO.

Glazing Accessories; FIO.

Manufacturer's descriptive product data, handling and storage recommendations, installation instructions, and cleaning instructions.

SD-04 Drawings

Glazing Materials and Accessories; FIO.

Drawings showing complete details of the proposed setting methods, mullion details, edge blocking, size of openings, frame details, materials, and types and thickness of glass.

SD-13 Certificates

Glass; FIO.

Certificates stating that the glass meets the specified requirements. Labels or manufacturers marking affixed to the glass will be accepted in lieu of certificates.

1.3 SYSTEM DESCRIPTION

Glazing systems shall be fabricated and installed watertight and airtight to withstand thermal movement and wind loading without glass breakage, gasket failure, deterioration of glazing accessories, and defects in the work. Glazed panels shall comply with the safety standards, as indicated in accordance with ANSI Z97.1. Glazed panels shall comply with indicated wind/snow loading in accordance with ASTM E 1300.

1.4 DELIVERY, STORAGE AND HANDLING

Glazing compounds shall be delivered to the site in the manufacturer's unopened containers. Glass shall be stored indoors in a safe, well ventilated dry location in accordance with manufacturer's instructions, and shall not be unpacked until needed for installation. Glass shall not be stored on site over 1 month.

1.5 PROJECT/SITE CONDITIONS

Glazing work shall not be started until outdoor temperature is above 5 degrees C (40 degrees F) and rising, unless procedures recommended by glass manufacturer and approved by Contracting Officer are made to warm the glass and rabbet surfaces. Ventilation shall be provided to prevent condensation of moisture on glazing work during installation. Glazing work shall not be performed during damp or raining weather.

1.6 WARRANTY

1.6.1 Insulating Glass

Manufacturer shall warrant the insulating glass to be free of fogging or film formation on the internal glass surfaces caused by failure of the hermetic seal for a period of 10 years from Date of Substantial Completion. Warranty shall be signed by manufacturer.

1.6.2 Monolithic Reflective Glass

Manufacturer shall warrant the monolithic reflective glass to be free of peeling or deteriorating of coating for a period of 10 years after Date of Substantial Completion. Warranty shall be signed by manufacturer.

PART 2 - PRODUCTS

2.1 FLOAT GLASS

2.1.1 Annealed Glass

Annealed glass shall be Type I transparent flat type, Class 1 - tinted, Quality q3 - glazing select, 45 percent light transmittance, conforming to ASTM C 1036. Color shall be bronze.

2.1.2 Tinted (Light-Reducing) Glass

Tinted (light-reducing) glass shall be Type I transparent flat type, Class 3-tinted, Quality q3 - glazing select, 45 percent light transmittance, conforming to ASTM C 1036. Color shall be bronze.

2.2 ROLLED GLASS

2.3 INSULATING GLASS

Insulating glass shall be Class A preassembled units of dual-seal construction consisting of lites of glass separated by an aluminum spacer and dehydrated space conforming to ASTM E 773 and ASTM E 774. Aluminum spacer shall be roll-formed, with bent or tightly soldered joints to completely seal the spacer periphery and eliminate moisture and hydrocarbon vapor transmission into airspace through the corners. Primary seal shall be compressed polyisobutylene and the secondary seal shall be a specially formulated silicone. Glass types shall be as follows:

2.3.1 Clear Insulating Glass

Glass for two-pane insulating units shall be Type I annealed glass, Class 1 - clear, Quality q3 - glazing select, conforming to ASTM C 1036.

2.3.2 Low-E Insulating Glass

Interior and exterior glass panes for Low-E insulating units shall be Type I annealed flat glass, Class 2-tinted with anti-reflective low-emissivity coating on No. 2 surface (inside surface of exterior pane), Quality q3 - glazing select, conforming to ASTM C 1036. Color shall be bronze.

2.4 GLAZING ACCESSORIES

2.4.1 Preformed Tape

Preformed tape shall be elastomeric rubber extruded into a ribbon of a width and thickness suitable for specific application. Tape shall be of type which will remain resilient, have excellent adhesion, and be chemically compatible to glass, metal, or wood.

2.4.2 Sealant

Sealant shall be elastomeric conforming to ASTM C 920, Type S or M, Grade NS, Class 12.5, Use G, of type chemically compatible with setting blocks, preformed sealing tape and sealants used in manufacturing insulating glass. Color of sealant shall be as selected.

2.4.3 Glazing Gaskets

Glazing gaskets shall be extruded with continuous integral locking projection designed to engage into metal glass holding members to provide a watertight seal during dynamic loading, building movements and thermal movements. Glazing gaskets for a single glazed opening shall be continuous one-piece units with factory-fabricated injection-molded corners free of flashing and burrs. Glazing gaskets shall be in lengths or units recommended by manufacturer to ensure against pull-back at corners. Glazing gasket profiles shall be as indicated on drawings.

2.4.3.1 Fixed Glazing Gaskets

Fixed glazing gaskets shall be closed-cell (sponge) smooth extruded compression gaskets of cured elastomeric virgin neoprene compounds conforming to ASTM C 509, Type 2, Option 1.

2.4.3.2 Wedge Glazing Gaskets

Wedge glazing gaskets shall be high-quality extrusions of cured elastomeric virgin neoprene compounds, ozone resistant, conforming to ASTM C 864, Option 1, Shore A durometer between 65 and 75.

2.4.3.3 Aluminum Framing Glazing Gaskets

Glazing gaskets for aluminum framing shall be permanent, elastic, non-shrinking, non-migrating, watertight and weathertight.

2.4.4 Putty and Glazing Compound

Glazing compound shall conform to ASTM C 669 for face-glazing metal sash. Putty shall be linseed oil type conforming to CID A-A-378 for face-glazing primed wood sash. Putty and glazing compounds shall not be used with insulating glass or laminated glass.

2.4.5 Setting and Edge Blocking

Neoprene setting blocks shall be dense extruded type conforming to ASTM D 395, Method B, Shore A durometer between 70 and 90. Edge blocking shall be Shore A durometer of 50 (+ or - 5). Silicone setting blocks shall be required when blocks are in contact with silicone sealant. Profiles, lengths and locations shall be as required and recommended in writing by glass manufacturer.

PART 3 - EXECUTION

3.1 PREPARATION

Openings and framing systems scheduled to receive glass shall be examined for compliance with approved shop drawings, GANA-01 and glass manufacturer's recommendations including size, squareness, offsets at corners, presence and function of weep system, face and edge clearance requirements and effective sealing between joints of glass-framing members. Detrimental materials shall be removed from glazing rabbet and glass surfaces and wiped dry with solvent. Glazing surfaces shall be dry and free of frost.

3.2 INSTALLATION

Glass and glazing work shall be performed in accordance with approved shop drawings, GANA-01, glass manufacturer's instructions and warranty requirements. Glass shall be installed with factory labels intact and removed only when instructed. Wired glass and fire/safety rated glass shall be installed in accordance with NFPA 80. Edges and corners shall not be ground, nipped or cut after leaving factory. Springing, forcing or twisting of units during installation will not be permitted.

3.3 CLEANING

Upon completion of project, outside surfaces of glass shall be washed clean and the inside surfaces of glass shall be washed and polished in accordance with glass manufacturer's recommendations.

3.4 PROTECTION

Glass work shall be protected immediately after installation. Glazed openings shall be identified with suitable warning tapes, cloth or paper flags, attached with non-staining adhesives. Reflective glass shall be protected with a protective material to eliminate any contamination of the reflective coating. Protective material shall be placed far enough away from the coated glass to allow air to circulate to reduce heat buildup and moisture accumulation on the glass. Glass units which are broken, chipped, cracked, abraded, or otherwise damaged during construction activities shall be removed and replaced with new units.

- - o 0 o - -

SECTION 09250A

GYPSUM WALLBOARD

PART 1 - GENERAL

1.1 REFERENCES

The publications listed below form a part of this specification to the extent referenced. The publications are referred to in the text by basic designation only.

AMERICAN SOCIETY FOR TESTING AND MATERIALS (ASTM)

ASTM A 580	(1994) Stainless and Heat Resisting Steel Wire
ASTM A 853	(1993) Steel Wire, Carbon, for General Use
ASTM C 36	(1994) Gypsum Wallboard
ASTM C 79	(1994) Gypsum Sheathing Board
ASTM C 442	(1992) Gypsum Backing Board and Coreboard
ASTM C 475	(1993) Joint Compound and Joint Tape for Finishing Gypsum Board
ASTM C 514	(1994) Nails for the Application of Gypsum Board
ASTM C 557	(1993a) Adhesive for Fastening Gypsum Wallboard to Wood Framing
ASTM C 630	(1993) Water-Resistant Gypsum Backing Board
ASTM C 645	(1994) Non-Load (Axial) Bearing Steel Studs, Runners (Track), and Rigid Furring Channels for Screw Application of Gypsum Board
ASTM C 754	(1988) Installation of Steel Framing Members to Receive Screw-Attached Gypsum
ASTM C 840	(1994) Application and Finishing of Gypsum Board
ASTM C 931	(1992) Exterior Gypsum Soffit Board
ASTM C 955	(1994) Load-Bearing (Transverse and Axial) Steel Studs, Runners (Track), and Bracing or Bridging for Screw Application of Gypsum Board and Metal Plaster Bases
ASTM C 960	(1991) Predecorated Gypsum Board

ASTM C 1002	(1993) Steel Drill Screws for the Application of Gypsum Board or Metal Plaster Bases

FACTORY MUTUAL ENGINEERING AND RESEARCH (FM)

FM P8016	(1994) Specification Tested Products Guide

FEDERAL SPECIFICATIONS (FS)

FS QQ-N-281	(Rev D; Am 2) Nickel-Copper Alloy Bar, Rod, Plate, Sheet, Strip, Wire, Forgings and Structural and Special Shaped Sections

GYPSUM ASSOCIATION (GA)

GA 600	(1994) Fire Resistance Design Manual

UNDERWRITERS LABORATORIES (UL)

UL-05	(1994; supple) Fire Resistance Directory

1.2 SUBMITTALS

Government approval is required for submittals with a "GA" designation; submittals having an "FIO" designation are for information only. The following shall be submitted in accordance with Section 01330 - SUBMITTAL PROCEDURES:

SD-04 Drawings

Steel Framing; GA.

Control Joints; FIO.

Fire-Resistant Assemblies; GA.

Drawings and installation details for ceiling framing, furring, special wall framing, and framed openings in walls and ceilings.

SD-13 Certificates

Gypsum Wallboard; GA.

Water-Resistant Gypsum Board; GA.

Steel Framing; GA.

Certificates stating that the steel framing and gypsum wallboard meet the specified requirements.

1.3 DELIVERY, STORAGE AND HANDLING

Materials shall be delivered in original containers bearing the name of manufacturer, contents, and brand name. Materials shall be stored in accordance with manufacturer's printed instructions.

1.4 ENVIRONMENTAL CONDITIONS

Environmental conditions for application and finishing of gypsum board shall be in accordance with ASTM C 840.

PART 2 - MATERIALS

2.1 SUSPENDED CEILING FRAMING

Main carrying channels and cross furring members for suspended gypsum board ceilings shall conform to ASTM C 645. Carrying channels shall be formed from 16 gauge, cold-rolled steel, hot-dipped galvanized, 1-1/2 by 3/4 inch. Furring members shall be cold-rolled steel, hot-dip galvanized, 3/4 by 3/4 inch.

2.2 GYPSUM BOARD

Gypsum board shall have square-cut ends, tapered or beveled edges and shall be maximum possible length.

2.2.1 Standard Gypsum Board

Regular gypsum board shall conform to ASTM C 36, and shall be 48 inches wide.

2.2.2 Fire-Rated Gypsum Board

Fire-rated gypsum board shall conform to ASTM C 36, and shall be Type X, 48 inches wide.

2.2.3 Water-Resistant Gypsum Board

Water-resistant gypsum board shall conform to ASTM C 630, regular, and shall be 48 inch width.

2.3 ACCESSORIES

2.3.1 Taping and Embedding Compound

Taping and embedding compound shall conform to ASTM C 475.

2.3.2 Finishing or Topping Compound

Finishing or topping compound shall conform to ASTM C 475.

2.3.3 All-Purpose Compound

All-purpose compound shall be compatible with tape and substrate.

2.3.4 Joint Tape

Joint tape shall conform to ASTM C 475 and shall be as recommended by gypsum board manufacturer.

2.3.5 Screws

Screws shall conform to ASTM C 1002. Screws shall be, Type G for gypsum board to gypsum board, Type S for wood or light-gauge steel framing.

2.3.6 Adhesives

Adhesives shall conform to ASTM C 557.

2.3.7 Hangers

Suspended ceiling runner channel hangers shall be soft, annealed steel wire not less than 0.1620 inch nominal diameter, conforming to ASTM A 853 or flat iron or steel straps, at least 3/32 by 7/8 inch size, coated with zinc, cadmium, or rust-inhibiting paint].

2.3.8 Fastenings

Tie wire, clips, rings, and other fastenings shall be corrosion-resisting steel conforming to ASTM A 580, composition 302, 304, or 316, Condition A, or nickel-copper alloy conforming to FS QQ-N-281, Class A or B, annealed condition except vertical surfaces not incorporated in ceiling construction may be erected with soft, annealed steel conforming to ASTM A 853.

PART 3 - EXECUTION

3.1 SUSPENDED CEILING FRAMING

Suspended ceiling system framing shall be installed in accordance with ASTM C 754.

3.2 APPLICATION OF GYPSUM BOARD

Gypsum board shall be installed in accordance with ASTM C 840 and as specified.

3.3 TAPING AND FINISHING

Gypsum board taping and finishing shall be performed in accordance with ASTM C 840.

3.4 FIRE-RESISTANT ASSEMBLIES

Gypsum wallboard for fire-rated assemblies shall be in accordance with UL-05, FM P8016 or GA 600 for the design number indicated on drawings.

3.5 PATCHING

Surface defects and damage shall be corrected as required to leave gypsum board ready to receive finish as specified.

- - o 0 o - -

SECTION 09510

ACOUSTICAL CEILINGS

PART 1 - GENERAL

1.1 REFERENCES

The publications listed below form a part of this specification to the extent referenced. The publications are referred to in the text by basic designation only.

AMERICAN SOCIETY FOR TESTING AND MATERIALS (ASTM)

ASTM C 635	(1995) Manufacture, Performance, and Testing of Metal Suspension Systems for Acoustical Tile and Lay-In Panel Ceilings
ASTM C 636	(1992) Installation of Metal Ceiling Suspension Systems for Acoustical Tile and Lay-In Panel Ceilings
ASTM E 119	(1995a) Fire Tests of Building Construction and Materials
ASTM E 1264	(1990) Standard Classification for Acoustical Ceiling Products
ASTM E 1414	(1991a) Standard Test for Airborne Sound Attenuation Between Rooms Sharing a Common Ceiling Plenum.

UNDERWRITERS LABORATORIES (UL)

UL-05	(1996) Fire Resistance Directory

1.2 GENERAL REQUIREMENTS

Acoustical treatment shall consist of sound controlling units mechanically mounted on a ceiling suspension system. The unit size, texture, finish, and color shall be as specified. The location and extent of acoustical treatment shall be as shown on the drawings.

1.3 SUBMITTALS

Government approval is required for submittals with a "GA" designation; submittals having an "FIO" designation are for information only. The following shall be submitted in accordance with Section 01330 - SUBMITTAL PROCEDURES:

SD-01 Data

Acoustical Ceiling System; FIO.

Manufacturer's descriptive data, catalog cuts, and installation instructions.

SD-04 Drawings

Acoustical Ceiling System; FIO.

Drawings showing suspension system, method of anchoring and fastening, details, and reflected ceiling plan.

SD-09 Reports

Fire Resistive Ceilings; FIO.

Ceiling Attenuation Class and Test; FIO.

Reports by an independent testing laboratory attesting that acoustical ceiling systems meet specified sound transmission requirements. Data attesting to conformance of the proposed system to Underwriters Laboratories requirements for the fire endurance rating listed in UL-05 may be submitted in lieu of test reports.

SD-13 Certificates

Acoustical Units; FIO.

Certificate attesting that the mineral based acoustical units furnished for the project contains recycled material and showing an estimated percent of such material.

SD-14 Samples

Acoustical Units; FIO.

Two samples of each type of acoustical unit and each type of suspension grid tee section showing texture, finish, and color.

1.4 DELIVERY AND STORAGE

Materials shall be delivered to the site in the manufacturer's original unopened containers with brand name and type clearly marked. Materials shall be carefully handled and stored in dry, watertight enclosures. Immediately before installation, acoustical units shall be stored for not less than 24 hours at the same temperature and relative humidity as the space where they will be installed in order to assure proper temperature and moisture acclimation.

1.5 ENVIRONMENTAL REQUIREMENTS

A uniform temperature of not less than 60 degrees F nor more than 85 degrees F and a relative humidity of not more than 70 percent shall be maintained before, during, and after installation of acoustical units.

1.6 SCHEDULING

Interior finish work such as plastering, concrete and terrazzo work shall be complete and dry before installation. Mechanical, electrical, and other work above the ceiling line shall be completed and heating, ventilating, and air conditioning systems shall be installed and operating in order to maintain temperature and humidity requirements.

1.7 WARRANTY

Manufacturer's standard performance guarantees or warranties that extend beyond a one year period shall be provided.

1.8 EXTRA MATERIALS

Spare tiles of each color shall be furnished at the rate of 5 tiles for each 1000 tiles installed. Tiles shall be from the same lot as those installed.

PART 2 - PRODUCTS

2.1 ACOUSTICAL UNITS

Acoustical units shall conform to ASTM E 1264, Class A, and the following requirements:

2.1.1 Units for Exposed-Grid System A

Type: III (mineral fiber with painted finish)
Minimum NRC: 0.55 when tested on mounting No. E-400
Pattern: A
Nominal size: 24 by 48inches.
Edge detail: Trimmed and butt.
Finish: Factory-applied color finish white
Minimum LR coefficient: 0.70.
Minimum CAC: 40.

Metal Ceiling System (For Exterior Application)
Type: Parallel Beam
NRC grade: 55 minimum when tested on mounting No. 7.
Pattern: Vista as manufactured by Chicago Metallic Corporation or approved equal.
Nominal size: 4 inches
Edge detail: Manufacturer's standard.
Finish: Factory-applied, color to be selected from the manufacturer's standard colors.
Metal Ceiling systems shall be designed for exterior use and shall be equipped with all necessary components to withstand exterior conditions including wind.

2.2 SUSPENSION SYSTEM

Suspension system shall be exposed-grid and shall conform to ASTM C 635 for intermediate-duty systems Surfaces exposed to view shall be aluminum or steel with a factory-applied white color baked-enamel finish . Wall molding shall

have a flange of not less than 15/16 inch. Inside and outside corner caps shall be provided.

2.3 HANGERS

Hangers shall be galvanized steel wire. Hangers and attachment shall support a minimum 300 pound ultimate vertical load without failure of supporting material or attachment.

2.4 ACCESS PANELS

Access panels shall match adjacent acoustical units and shall be designed and equipped with suitable framing and fastenings for removal and replacement without damage. Panel shall be not less than 12 by 12 inches or more than 12 by 24 inches. An identification plate of 0.032 inch thick aluminum, 3/4 inch in diameter, stamped with the letters "AP" and finished the same as the unit, shall be attached near one corner on the face of each access panel.

2.5 FINISHES

Acoustical units and suspension system members shall have manufacturer's standard textures, patterns and finishes as specified. Ceiling suspension system components shall be treated to inhibit corrosion.

2.6 COLORS AND PATTERNS

Colors and patterns for acoustical units and suspension system components shall be as indicated in the drawings.

2.7 CEILING ATTENUATION CLASS AND TEST

Ceiling attenuation class (CAC) range of acoustical units, when required, shall be determined in accordance with ASTM E 1414. Test ceiling shall be continuous at the partition and shall be assembled in the suspension system in the same manner that the ceiling will be installed on the project. System shall be tested with all acoustical units installed.

PART 3 - EXECUTION

3.1 INSTALLATION

Acoustical work shall be provided complete with necessary fastenings, clips, and other accessories required for a complete installation. Mechanical fastenings shall not be exposed in the finished work. Hangers shall be laid out for each individual room or space. Hangers shall be placed to support framing around beams, ducts, columns, grilles, and other penetrations through ceilings. Main runners and carrying channels shall be kept clear of abutting walls and partitions. At least two main runners shall be provided for each ceiling span. Wherever required to bypass an object with the hanger wires, a subsuspension system shall be installed, so that all hanger wires will be plumb.

3.1.1 Suspension System

Suspension system shall be installed in accordance with ASTM C 636 and as specified herein. There shall be no hanger wires or other loads suspended from underside of steel decking.

3.1.1.1 Plumb Hangers

Hangers shall be plumb and shall not press against insulation covering ducts and pipes.

3.1.1.2 Splayed Hangers

Where hangers must be splayed (sloped or slanted) around obstructions, the resulting horizontal force shall be offset by bracing, countersplaying, or other acceptable means.

3.1.2 Wall Molding

Wall molding shall be provided where ceilings abut vertical surfaces. Wall molding shall be secured not more than 3 inches from ends of each length and not more than 16 inches on centers between end fastenings. Wall molding springs shall be provided at each acoustical unit in semi-exposed or concealed systems.

3.1.3 Acoustical Units

Acoustical units shall be installed in accordance with the approved installation instructions of the manufacturer. Edges of acoustical units shall be in close contact with metal supports, with each other, and in true alignment. Acoustical units shall be arranged so that units less than one-half width are minimized. Units in exposed-grid system shall be held in place with manufacturer's standard hold-down clips, if units weigh less than 1 psf or if required for fire resistance rating.

3.2 CEILING ACCESS PANELS

Ceiling access panels shall be located directly under the items which require access.

3.3 CLEANING

Following installation, dirty or discolored surfaces of acoustical units shall be cleaned and left free from defects. Units that are damaged or improperly installed shall be removed and new units provided as directed.

- - o 0 o - -

SECTION 09650A - RESILIENT FLOORING

PART 1 - GENERAL

1.1 REFERENCES

The publications listed below form a part of this specification to the extent referenced. The publications are referred to in the text by basic designation only.

AMERICAN SOCIETY FOR TESTING AND MATERIALS (ASTM)

ASTM F 1066	(1987) Vinyl Composition Floor tile
ASTM F 1303	(1990) Sheet Vinyl Floor Covering with Backing
ASTM F 1344	(1991) Rubber Floor Tile

FEDERAL SPECIFICATIONS (FS)

FS L-F-475	(Rev A; Am 1; Int Am 3) Floor Covering Vinyl, Surface (Tile and Roll), with Backing
FS L-F-001641	(Basic; Am 2) Floor Covering Translucent or Transparent Vinyl Surface with Backing
FS RR-T-650	(Rev D) Treads, Metallic and Nonmetallic, Skid Resistant
FS SS-T-312	(Rev B; Int Am 1; Notice 1) Tile, Floor: Asphalt, Rubber, Vinyl-Asbestos
FS SS-W-40	(Rev A; Int Am 1; Notice 1) Wall Base: Rubber, and Vinyl Plastic

1.2 SUBMITTALS

Government approval is required for submittals with a "GA" designation; submittals having an "FIO" designation are for information only. The following shall be submitted in accordance with Section 01330 - SUBMITTAL PROCEDURES:

SD-01 Data

Resilient Flooring and Accessories; GA.

Manufacturer's descriptive data and installation instructions. Cleaning and maintenance instructions shall be included.

SD-14 Samples

Resilient Flooring and Accessories; GA.

Three samples of each indicated color and type of flooring an base. Sample size shall be minimum 3 inches by 5 inches.

1.3 DELIVERY AND STORAGE

Materials shall be delivered to the building site in original unopened containers and shall be stored according to manufacturer's recommendations.

1.4 ENVIRONMENTAL REQUIREMENTS

Areas to receive resilient flooring shall be maintained at a temperature above 70 degrees F for 2 days before application, during application and 2 days after application. A minimum temperature of 55 degrees F shall be maintained thereafter.

1.5 SCHEDULING

Resilient flooring application shall be scheduled after the completion of other work which would damage the finished surface of the flooring.

PART 2 - PRODUCTS

2.1 VINYL-COMPOSITION TILE

Vinyl-composition tile shall conform to ASTM F 1066, Class 2, (through pattern title), Composition 1, asbestos-free, and shall be 12 inches square and 1/8 inch thick. Tile shall have the color and pattern uniformly distributed throughout the thickness of the tile. Flooring in any one continuous area shall be from the same lot and shall have the same shade and pattern.

2.2 RESILIENT BASE

Base shall conform to FS SS-W-40, Type I (rubber). Style B, (coved)-installed with resilient flooring. Base shall be 4 inches high minimum 1/8 inch thick. Preformed outside corners shall be furnished.

2.3 ADHESIVE

Adhesive for flooring and wall base shall be as recommended by the flooring manufacturer.

2.4 COLOR

Color shall be as scheduled.

PART 3 - EXECUTION

3.1 INSTALLATION

Flooring and accessories shall be installed in accordance with manufacturer's instructions.

- - o 0 o - -

SECTION 09900

PAINTING, GENERAL

PART 1 - GENERAL

1.1 REFERENCES

The publications listed below form a part of this specification to the extent referenced. The publications are referred to in the text by basic designation only.

AMERICAN CONFERENCE OF GOVERNMENTAL INDUSTRIAL HYGIENISTS (ACGIH)

ACGIH-02	(1996) Threshold Limit Values for Chemical Substances and Physical Agents and Biological Exposure Indices

AMERICAN SOCIETY FOR TESTING AND MATERIALS (ASTM)

ASTM C 150	(1995) Portland Cement
ASTM D 3273	(1994) Resistance to Growth of Mold on the Surface of Interior Coating in an Environmental Chamber
ASTM D 3274	(1995) Evaluating Degree of Surface Disfigurement of Paint Films by Microbial (Fungal or Algal) Growth or Soil and Dirt Accumulation
ASTM D 4214	(1989) Evaluating the Degree of Chalking of Exterior Paint Films
ASTM D 4258	(1983; R 1992) Surface Cleaning Concrete for Coating

COMMERCIAL ITEM DESCRIPTIONS (CID)

CID A-A-1500	(Rev A) Sealer, Surface (Latex Block Filler)
CID A-A-1546	(Rev A) Rubbing Varnish
CID A-A-2246	(Rev A) Paint, Latex (Gloss, Interior)
CID A-A-2247	(Basic) Paint, Latex (Semigloss, Interior)
CID A-A-2248	(Basic) Paint, Latex, (Flat, Interior)
CID A-A-2336	(Basic) Primer Coating (Oil-Alkyd, Exterior Wood, White and Tints)
CID A-A-2340	(Basic) Primer Coating (Latex, White, for Gypsum Wallboard)

CID A-A-2834	(Rev A) Urethane, Waterborne (Low VOC, Clear)

FEDERAL AVIATION ADMINISTRATION (FAA)

FAA AC 70/7460-1	(Rev J) Obstruction Marking and Lighting

FEDERAL SPECIFICATIONS (FS)

FS TT-C-542	(Rev E) Coating, Polyurethane, Oil-Free, Moisture Curing
FS TT-C-555	(Rev B; Am 1) Coating, Textured (for Interior and Exterior Masonry Surfaces)
FS TT-E-489	(Rev J) Enamel, Alkyd, Gloss, Low VOC Content
FS TT-E-2784	(Rev A; Am 1) Enamel (Acrylic-Emulsion, Exterior Gloss and Semigloss)
FS TT-P-19	(Rev D) Paint, Latex (Acrylic Emulsion, Exterior Wood and Masonry)
FS TT-P-28	(Rev G) Paint, Aluminum, Heat Resisting (1200 Degrees F.)
FS TT-P-38	(Rev E) Paint, Aluminum (Ready-Mixed)
FS TT-P-645	(Rev B) Primer, Paint, Zinc-Molybdate, Alkyd Type
FS TT-S-176	(Rev E; Am 1) Sealer, Surface, Varnish Type, Floor Wood or Cork
FS TT-S-223	(Rev B; Notice 2) Sealer, Surface, Floor, Water Emulsion Type
FS TT-S-708	(Rev A; Am 2) Stain, Oil; Semi-Transparent, Wood, Exterior
FS TT-S-001992	(Basic) Stain, Latex, Exterior for Wood Surfaces
FS TT-V-119	(Rev D; Am 2) Varnish, Spar, Phenolic-Resin
FS TT-V-121	(Rev H) Varnish, Spar, Water-Resisting

STEEL STRUCTURES PAINTING COUNCIL (SSPC)

SSPC Paint 5	(1995) Zinc Dust, Zinc Oxide and Phenolic Varnish Paint
SSPC Paint 18	(1991) Chlorinated Rubber Intermediate Coat Paint
SSPC Paint 20	(1991) Zinc-Rich Primers (Type I - Inorganic and Type II - Organic)

SSPC Paint 25	(1991) Red Iron Oxide, Zinc Oxide, Raw Linseed Oil and Alkyd Primer (without Lead and Chromate Pigments)
SSPC Paint 26	(1991) Slow Drying Linseed Oil Black Maintenance Primer (Without Lead and Chromate Pigments)
SSPC SP 1	(1982) Solvent Cleaning
SSPC SP 2	(1995) Hand Tool Cleaning
SSPC SP 3	(1995) Power Tool Cleaning
SSPC SP 6	(1994) Commercial Blast Cleaning
SSPC SP 7	(1994) Brush-Off Blast Cleaning

1.2 SUBMITTALS

Government approval is required for submittals with a “GA” designation; submittals having an “FIO” designation are for information only. The following shall be submitted in accordance with Section 01330, SUBMITTAL PROCEDURES.

SD-01 Data

Paint; GA.

The names, quantity represented, and intended use for the proprietary brands of materials proposed to be substituted for the specified materials 50 gallons or less.

SD-06 Instructions

Mixing and Thinning; GA.

Application; GA.

Manufacturer's current printed product description, material safety data sheets (MSDS) and technical data sheets for each coating system. Detailed mixing, thinning and application instructions, minimum and maximum application temperature, and curing and drying times between coats for epoxy, moisture-curing polyurethane, and liquid glaze coatings. Detailed application instructions for textured coatings shall be provided.

SD-09 Reports

Paint; GA.

A statement as to the quantity represented and the intended use, plus the following test report for batches in excess of 50 gallons:

a. A test report showing that the proposed batch to be used meets all specification requirements, or:

b. A test report showing that a previous batch of the same formulation as the batch to be used met all specification requirements, plus, on the proposed batch to be used, a report of test results for properties of weight per gallon, viscosity, fineness of grind, drying time, color, and gloss.

SD-13 Certificates

Lead; GA.

Mildewcide and Insecticide; GA.

Volatile Organic Compound (VOC) Content; GA.

Certificate stating that paints for interior use contain no mercurial mildewcide or insecticide. Certificate stating that paints proposed for use contain not more than 0.06 percent lead by weight of the total nonvolatile. Certificate stating that paints proposed for use meet Federal VOC regulations and those of the of the local Air Pollution Control Districts having jurisdiction over the geographical area in which the project is located.

SD-14 Samples

Moisture-curing Polyurethane; GA.

A complete moisture-curing polyurethane system applied to a panel of the same material as that on which the coating will be applied in the work and for each color specified. The sample panels will be used for quality control in applying the system.

Paint; GA.

While the material is at the site or source of supply, and at a time agreeable to the Contractor and the Contracting Officer, a 1 quart sample of each color and batch, except for quantities of 50 gallons or less, shall be taken by random selection from the sealed containers by the Contractor in the presence of a representative of the Contracting Officer. The contents of the containers to be sampled shall be thoroughly mixed to ensure that the sample is representative. Samples shall be identified by designated name, specification number, manufacturer name and address, batch number, project contract number, intended use, and quantity involved.

1.3 PACKAGING, LABELING, AND STORING

Paints shall be in sealed containers that legibly show the designated name, formula or specification number, batch number, color, quantity, date of manufacture, manufacturer's formulation number, manufacturer's directions including any warnings and special precautions, and name of manufacturer. Pigmented paints shall be furnished in containers not larger than 5 gallons. Paints and thinner shall be stored in accordance with the manufacturer's written directions and as a minimum stored off the ground, under cover, with sufficient ventilation to prevent the buildup of flammable vapors and at temperatures between 40 and 95 degrees F. Paints shall be stored on the project site or segregated at the source of supply sufficiently in advance of need to allow 30 days for testing.

1.4 APPROVAL OF MATERIALS

When samples are tested, approval of materials will be based on tests of the samples; otherwise, materials will be approved based on test reports furnished with them. If materials are approved based on test reports furnished, samples will be retained by the Government for testing should the materials appear defective during or after application. In addition to any other remedies under the contract the cost of retesting defective materials will be at the Contractor's expense.

1.5 ENVIRONMENTAL CONDITIONS

Unless otherwise recommended by the paint manufacturer, the ambient temperature shall be between 45 and 95 degrees F when applying coatings other than water-thinned, epoxy, and moisture-curing polyurethane coatings. Water-thinned coatings shall be applied only when ambient temperature is between 50 and 90 degrees F. Epoxy, and moisture-curing polyurethane coatings shall be applied only within the minimum and maximum temperatures recommended by the coating manufacturer. Moisture-curing polyurethane shall not be applied when the relative humidity is below 30 percent.

1.6 SAFETY AND HEALTH

Work shall comply with applicable Federal, State, and local laws and regulations, and with the ACCIDENT PREVENTION PLAN, including the Activity Hazard Analysis as specified in the CONTRACT CLAUSES. The Activity Hazard Analysis shall include analyses of the potential impact of painting operations on painting personnel and on others involved in and adjacent to the work zone.

1.6.1 Worker Exposures

Exposure of workers to hazardous chemical substances shall not exceed limits as established by ACGIH-02, or as required by a more stringent applicable regulation.

1.6.2 Toxic Compounds

Toxic products having ineffective physiological warning properties, such as no or low odor or irritation levels, shall not be used unless approved by the Contracting Officer.

1.6.3 Training

Workers having access to an affected work area shall be informed of the contents of the applicable material data safety sheets (MSDS) and shall be informed of potential health and safety hazard and protective controls associated with materials used on the project. An affected work area is one which may receive mists and odors from the painting operations. Workers involved in preparation, painting and clean-up shall be trained in the safe handling and application, and the exposure limit, for each material which the worker will use in the project. Personnel having a need to use respirators and masks shall be instructed in the use and maintenance of such equipment.

1.6.4 Coordination

Work shall be coordinated to minimize exposure of building occupants, other Contractor personnel, and visitors to mists and odors from preparation, painting and clean-up operations.

PART 2 - PRODUCTS

2.1 PAINT

The term "paint" as used herein includes emulsions, enamels, paints, stains, varnishes, sealers, cement-emulsion filler, and other coatings, whether used as prime, intermediate, or finish coat. Paint shall conform to the respective specifications listed for use in the painting schedules at the end of this section, except when the required amount of a material of a particular batch is 50 gallons or less, an approved first-line proprietary paint material with similar intended formulation, usage and color to that specified may be used. Additional requirements are as follows:

2.1.1 Colors and Tints

Colors shall be as selected from manufacturer's standard colors, as indicated. Manufacturer's standard color is for identification of color only. Tinting of epoxy and urethane paints shall be done by the manufacturer. Stains shall conform in shade to manufacturer's standard color. The color of the undercoats shall vary slightly from the color of the next coat.

2.1.2 Mildewcide and Insecticide

Paint specified for all coats applied to fabrics and vapor barrier jackets over insulation shall contain a mildewcide that will not adversely affect the color, texture, or durability of the coating. The mildewcide shall be incorporated into the paint by the manufacturer and shall attain a surface disfigurement rating of 8 or greater when tested in accordance with ASTM D 3273 and evaluated in accordance with ASTM D 3274. Mercurial mildewcide shall not be used in interior paint. Insecticides shall not be used in paint.

2.1.3 Lead

Paints containing lead in excess of 0.06 percent by weight of the total nonvolatile content (calculated as lead metal) shall not be used.

2.1.4 Chromium

Paints containing zinc chromate or strontium chromate pigments shall not be used.

2.1.5 Volatile Organic Compound (VOC) Content

Paints shall comply with applicable federal, state and local laws enacted to insure compliance with Federal Clean Air Standards and shall conform to the restrictions of the local air pollution control authority.

PART 3 - EXECUTION

3.1 PROTECTION OF AREAS NOT TO BE PAINTED

Items not to be painted which are in contact with or adjacent to painted surfaces shall be removed or protected prior to surface preparation and painting operations. Items removed prior to painting shall be replaced when painting is completed. Following completion of painting, workmen skilled in the trades involved shall reinstall removed items. Surfaces contaminated by coating materials shall be restored to original condition.

3.2 SURFACE PREPARATION

Surfaces to be painted shall be clean and free of foreign matter before application of paint or surface treatments. Oil and grease shall be removed prior to mechanical cleaning. Cleaning shall be programmed so that dust and other contaminants will not fall on wet, newly painted surfaces. Exposed ferrous metals such as nail heads on or in contact with surfaces to be painted with water-thinned paints, shall be spot-primed with a suitable corrosion-inhibitive primer capable of preventing flash rusting and compatible with the coating specified for the adjacent areas.

3.2.1 Concrete, Stucco and Masonry Surfaces

Concrete, stucco and masonry surfaces shall be allowed to dry at least 30 days before painting, except concrete slab on grade which shall be allowed to cure 90 days before painting. Surfaces shall be cleaned in accordance with ASTM D 4258. Glaze, efflorescence, laitance, dirt, grease, oil, asphalt, surface deposits of free iron and other foreign matter shall be removed prior to painting. Surfaces to receive polyurethane or epoxy coatings shall be acid-etched or mechanically abraded as specified by the coating manufacturer, rinsed with water, allowed to dry, and treated with the manufacturer's recommended conditioner prior to application of the first coat.

3.2.2 Ferrous Surfaces

Ferrous surfaces including those that have been shop-coated, shall be solvent-cleaned or detergent-washed in accordance with SSPC SP 1. Surfaces that contain loose rust, loose mill scale, and other foreign substances shall be cleaned mechanically with hand tools according to SSPC SP 2, power tools according to SSPC SP 3 or by sandblasting according to SSPC SP 7. Shop-coated ferrous surfaces shall be protected from corrosion by treating and touching up corroded areas immediately upon detection.

3.2.3 Nonferrous Metallic Surfaces

Galvanized, aluminum and aluminum-alloy, lead, copper, and other nonferrous metal surfaces shall be solvent-cleaned or detergent-washed in accordance with SSPC SP 1.

3.2.4 Gypsum Board Surfaces

Gypsum board surfaces shall be dry and shall have all loose dirt and dust removed by brushing with a soft brush, rubbing with a cloth, or

vacuum-cleaning prior to application of the first-coat material. A damp cloth or sponge may be used if paint will be water-based.

3.2.5 Mastic-Type Surfaces

Mastic-type surfaces shall be prepared by removing foreign material.

3.2.6 Wood Surfaces

Wood surfaces shall be cleaned of foreign matter. Moisture content of the wood shall not exceed 12 percent as measured by a moisture meter, unless otherwise authorized. Wood surfaces adjacent to surfaces to receive water-thinned paints shall be primed and/or touched up before applying water-thinned paints. Small, dry seasoned knots shall be scraped, cleaned, and given a thin coat of commercial knot sealer, before application of the priming coat. Pitch on large, open, unseasoned knots and all other beads or streaks of pitch shall be scraped off, or, if it is still soft, removed with mineral spirits or turpentine, and the resinous area shall be thinly coated with knot sealer. Finishing nails shall be set, and all holes and surface imperfections shall be primed. After priming, holes and imperfections in finish surfaces shall be filled with putty or plastic wood filler, colored to match the finish coat if natural finish is required, allowed to dry, and sanded smooth. Putty or wood filler shall be compatible with subsequent coatings.

3.2.7 Previously Painted Surfaces

Previously painted surfaces specified to be repainted or damaged during construction shall be thoroughly cleaned of all grease, dirt, dust or other foreign matter. Blistering, cracking, flaking and peeling or other deteriorated coatings shall be removed. Slick surfaces shall be roughened. Damaged areas such as, but not limited to, nail holes, cracks, chips, and spalls shall be repaired with suitable material to match adjacent undamaged areas. Edges of chipped paint shall be feather edged and sanded smooth. Rusty metal surfaces shall be cleaned as per SSPC requirements. Solvent, mechanical, or chemical cleaning methods shall be used to provide surfaces suitable for painting. Chalk shall be removed so that when tested in accordance with ASTM D 4214, the chalk resistance rating is no less than 8. New, proposed coatings shall be compatible with existing coatings. If existing surfaces are glossy, the gloss shall be reduced.

3.3 MIXING AND THINNING

When thinning is approved as necessary to suit surface, temperature, weather conditions, or application methods, paints may be thinned in accordance with the manufacturer's directions. When thinning is allowed, paints shall be thinned immediately prior to application with not more than 1 pint of suitable thinner per gallon. The use of thinner shall not relieve the Contractor from obtaining complete hiding, full film thickness, or required gloss. Thinning shall not cause the paint to exceed limits on volatile organic compounds. Paints of different manufacturers shall not be mixed.

3.3.1 Cement-Emulsion Filler Coat

Cement and aggregate shall be dry-mixed so that uniform distribution and intermixing are obtained. Mixing liquid and one-half of the total amount of water shall be premixed and added gradually to the white portland cement and aggregate with constant stirring until a thick, smooth material is obtained. Emulsion paint shall then be added to the mixture and stirred until uniformity is obtained. The blend shall have a thick, creamy consistency. The remainder of the water shall be added if necessary to obtain a material with adequate application properties. Blending resin emulsion or emulsion paint with any other component shall be done with caution; too rapid an agitation will cause air entrapment and foaming.

3.3.2 Two-Component Systems

Two-component systems shall be mixed in accordance with manufacturer's instructions. Any thinning of the first coat to ensure proper penetration and sealing shall be as recommended by the manufacturer for each type of substrate.

3.4 APPLICATION

Painting practices shall comply with applicable federal, state and local laws enacted to insure compliance with Federal Clean Air Standards. Unless otherwise specified or recommended by the paint manufacturer, paint may be applied by brush, roller, or spray. At the time of application, paint shall show no signs of deterioration. Uniform suspension of pigments shall be maintained during application. Each coat of paint shall be applied so dry film shall be of uniform thickness and free from runs, drops, ridges, waves, pinholes or other voids, laps, brush marks, and variations in color, texture, and finish. Hiding shall be complete. Rollers for applying paints and enamels shall be of a type designed for the coating to be applied and the surface to be coated. Special attention shall be given to insure that all edges, corners, crevices, welds, and rivets receive a film thickness equal to that of adjacent painted surfaces. Paints, except water-thinned types, shall be applied only to surfaces that are completely free of moisture as determined by sight or touch.

3.4.1 Ventilation

Affected areas shall be ventilated during paint application so that workers exposure to chemical substances shall not exceed limits as established by ACGIH-02, or as required by a more stringent applicable regulation. Interior work zones having a volume of 10,000 cubic feet or less shall be ventilated at a minimum of 2 air exchanges per hour. Ventilation in larger work zones shall be maintained by means of mechanical exhaust. Solvent vapors shall be exhausted outdoors, away from air intakes and workers. Return air inlets in the work zone shall be temporarily sealed before start of work until the coatings have dried.

3.4.2 Respirators

Operators and personnel in the vicinity of operating paint sprayers shall wear respirators.

3.4.3 First Coat

The first coat on plaster, gypsum wallboard, and other surfaces shall include repeated touching up of suction spots or overall application of primer or sealer to produce uniform color and gloss. Excess sealer shall be wiped off after each application. The first coat on both faces of wood doors shall be applied at essentially the same time. Glazed doors and sashes shall be given the specified coating system within 3 weeks of the time they are glazed, but not before the glazing material has set; paint shall overlay glass about 70 mils all around. Each varnish coat shall be sanded lightly prior to application of subsequent coats.

3.4.4 Timing

Surfaces that have been cleaned, pretreated, and otherwise prepared for painting shall be given a coat of the specified first coat as soon as practical after such pretreatment has been completed, but prior to any deterioration of the prepared surface. Sufficient time shall elapse between successive coats to permit proper drying. This period shall be modified as necessary to suit weather conditions. Oil-based or oleoresinous solvent-type paints shall be considered dry for recoating when the paint feels firm, does not deform or feel sticky under moderate pressure of the thumb, and the application of another coat of paint does not cause the undercoat to lift or lose adhesion. Manufacturer's instructions for application, curing and drying time between coats of two-component systems shall be followed.

3.4.5 Fillers

Concrete and masonry surface voids shall be filled; however, surface irregularities need not be completely filled. The dried filler shall be uniform and free of pinholes. Filler shall not be applied over caulking compound.

3.4.5.1 Cement-Emulsion Filler

Immediately before filler application, surfaces shall be dampened uniformly and thoroughly, with no free surface water visible, by several applications of potable water with a fog spray, allowing time between the sprayings for water to be absorbed. Cement-emulsion filler shall be scrubbed into the surface vigorously with a stiff-bristled brush having tampico or palmyra bristles not longer than 2-1/2 inches. At least 24 hours shall elapse before applying exterior emulsion paint over cement-emulsion filler. When the ambient temperature is over 85 degrees F, cement-emulsion filler surfaces shall be dampened lightly with a fog spray of potable water immediately prior to application of the subsequent paint coat.

3.4.5.2 Latex Filler

Latex filler, CID A-A-1500, shall be applied according to the manufacturer's instructions. Surface voids shall be filled and excess filler shall be removed from the surface with a rubber squeegee. The filler shall be allowed to dry the length of time specified by the manufacturer prior to applying successive coats of paint.

3.4.6 Textured Coating

Application of textured coating, FS TT-C-555, shall be as specified in the manufacturer's printed directions at a rate of 45 to 55 square feet per gallon in one coat.

3.4.7 Ferrous-Metal Primer

Primer for ferrous-metal shall be applied to ferrous surfaces to receive paint other than asphalt varnish prior to deterioration of the prepared surface. The semitransparent film applied to some pipes and tubing at the mill is not to be considered a shop coat, but shall be overcoated with the specified ferrous-metal primer prior to application of finish coats.

3.5 SURFACES TO BE PAINTED

Surfaces listed in the painting schedules at the end of this section, other than those listed in paragraph SURFACES NOT TO BE PAINTED, shall be painted as scheduled.

3.6 SURFACES NOT TO BE PAINTED

Surfaces in the following areas are not to be painted: .sprinkler heads, fire alarms. In addition surfaces of hardware, fittings, and other factory finished items shall not be painted.

3.7 CLEANING

Cloths, cotton waste and other debris that might constitute a fire hazard shall be placed in closed metal containers and removed at the end of each day. Upon completion of the work, staging, scaffolding, and containers shall be removed from the site or destroyed in an approved manner. Paint and other deposits on adjacent surfaces shall be removed and the entire job left clean and acceptable.

3.8 PAINTING SCHEDULES

The following painting schedules identify the surfaces to be painted and prescribe the paint to be used and the number of coats of paint to be applied. Contractor options are indicated by ------or------ between optional systems or coats.

EXTERIOR PAINTING SCHEDULE

Surface	First Coat	Second Coat	Third Coat
Concrete masonry units.	Cement-emulsion filler	FS TT-P-19	None

NOTE: Cement-emulsion filler coat shall be acrylic-based and shall consist of the following ingredients in the proportion stated: white portland cement, ASTM C 150, Type I, 16.5 pounds; aggregate 33.5 pounds; mixing liquid, factory-prepared acrylic containing 46 to 47 percent solids, 0.75 gallon; potable water 1.0 gallon maximum; exterior emulsion paint, FS TT-P-19 1.0 gallon. Aggregate shall consist of Washed silica sand of the following gradation:

U.S. Sieve Size	Percent Sand (by Weight) Passing Individual Sieve
0.850 mm (20)	100
0.600 mm (30)	95 - 100
0.300 mm (50)	30 - 65
0.150 mm (100)	0 - 10
0.075 mm (200)	0 - 1

Concrete, unless otherwise specified.	FS TT-P-19	FS TT-P-19	None
Wood, unless otherwise	CID A-A-2336 specified.	FS TT-P-19	FS TT-P-19
Ferrous metal unless otherwise	SSPC Paint 5 specified.	FS TT-P-38	FS TT-P-38
Aluminum aluminum-alloy, and other non-ferrous metal (non-galvanized)	FS TT-P-645	FS TT-E-489,	FS TT-E-489

INTERIOR PAINTING SCHEDULE

Surface	First Coat	Second Coat	Third Coat
Plaster, gypsum board, concrete, and concrete masonry units not requiring a smooth finish, unless otherwise specified	CID A-A-2340	CID A-A-2246	None
		or	or
		CID A-A-2247	None
		or	or
		CID A-A-2248	None
Concrete masonry units requiring a smooth finish	CID A-A-1500	CID A-A-2340	CID A-A-2246
			or
			CID A-A-2247
			or
			CID A-A-2248
Concrete masonry units in food-preparation, food-serving, restrooms and laundry areas, unless otherwise specified	CID A-A-1500	CID A-A-2340	FS TT-E-2784
Metal in food-preparation, food-serving, shower, restrooms, and laundry areas, other than equipment, machinery.	Ferrous metal: FS TT-P-645	FS TT-E-2784 Type II	FS TT-E-2784 Type II
	Aluminum: FS TT-P-645		
	Galvanized surface: no primer:		

INTERIOR PAINTING SCHEDULE

Surface	First Coat	Second Coat	Third Coat
Ferrous metal unless otherwise specified.	SSPC Paint 25	FS TT-P-38	FS TT-P-38
Ferrous metal factory-primed mechanical and electrical equipment.	Two coats of paint as recommended by the equipment manufacturer		None
Galvanized metal:	FS TT-P-19	Two coats of paint to match adjacent areas	
Wood: unless otherwise specified.	CID A-A-2340	CID A-A-2246	None
		or	
		CID A-A-2247	None
		or	
		CID A-A-2248	None

INTERIOR PAINTING SCHEDULE

Surface	First Coat	Second Coat	Third Coat
Ferrous Metal in refrigerated spaces.	FS TT-P-645	FS TT-E-2784 Type II	FS TT-E-2784 Type II
Metal: surfaces subject to high temperature, up to 232 degrees C (450 degrees F),	SSPC Paint 20 Type I	None	None
Oil-based caulking compound.	FS TT-P-38	Same as adjacent areas	
Concrete floor Sealer	Concrete floor to be sealed shall be sealed with Sikapronto as manufactured by Sika, or approved equal.		

- - o 0 o - -

SECTION 10440

INTERIOR SIGNAGE

PART 1 - GENERAL

1.1 REFERENCES

The publications listed below form a part of this specification to the extent referenced. The publications are referred to in the text by basic designation only.

ALUMINUM ASSOCIATION (AA)

AA DAF-45	(1980) Designation System for Aluminum Finishes
AA PK-1	(1989) Registration Record of Aluminum Association Alloy Designations and Chemical Composition Limits for Aluminum Alloys in the Form of Castings and Ingot
AA SAA-46	(1978) Standards for Anodized Architectural Aluminum

AMERICAN ARCHITECTURAL MANUFACTURERS ASSOCIATION (AAMA)

AAMA 605.2	(1992; Addenda Feb 1994) Voluntary Specification for High Performance Organic Coatings on Architectural Extrusions and Panels

AMERICAN NATIONAL STANDARDS INSTITUTE (ANSI)

ANSI Z97.1	(1984; Rev 1994) Safety Glazing Materials Used in Buildings

AMERICAN SOCIETY FOR TESTING AND MATERIALS (ASTM)

ASTM B 209	(1995) Aluminum and Aluminum-Alloy Sheet and Plate
ASTM B 221	(1995a) Aluminum and Aluminum-Alloy Extruded Bars, Rods, Wire, Shapes, and Tubes
ASTM C 1036	(1991) Flat Glass

CODE OF FEDERAL REGULATIONS (CFR)

36 CFR 1191	Americans with Disabilities Act (ADA) Accessibility Guidelines for Buildings and Facilities

FEDERAL STANDARDS (FED-STD)

FED-STD 795 (Basic) Uniform Federal Accessibility Standards

NATIONAL FIRE PROTECTION ASSOCIATION (NFPA)

NFPA 70 (1993) National Electrical Code

1.2 GENERAL

Interior signage shall be of the sizes and types shown on the drawings, shall conform to the requirements specified herein, and shall be provided at the locations indicated. Signs shall be complete with lettering, framing as detailed, and related components for a complete installation. Signs shall be the standard product of a manufacturer regularly engaged in the manufacture of such products and shall essentially duplicate signs that have been in satisfactory use at least 2 years prior to bid opening.

1.3 SUBMITTALS

Government approval is required for submittals with a "GA" designation; submittals having an "FIO" designation are for information only. The following shall be submitted in accordance with Section 01330 - SUBMITTAL PROCEDURES:

SD-01 Data

Interior Signage; FI0.

Manufacturer's descriptive data, catalogs cuts, installation and cleaning instructions.

1.4 DELIVERY AND STORAGE

Materials shall be delivered to the jobsite in manufacturer's original packaging and stored in a clean, dry area.

PART 2 - PRODUCTS

2.1 COLOR

Color shall be as scheduled.

2.2 ACRYLIC SHEET

Acrylic sheet for panels and components shall conform to ANSI Z97.1.

2.3 PLAQUE SIGNS

Plaque signs shall be a modular type signage system. Signs shall be fabricated of Type ES laminated thermosetting plastic suitable for engraving or acrylic plastic conforming to ANSI Z97.1.

2.3.1 Standard Modular Plaque Signs

Plaque signs shall consist of matte finish acrylic plastic or laminated thermosetting Type ES plastic, thickness and size as shown. Corners of signs shall be 3/4 inch radius.

2.3.2 Type of Mounting For Plaque Signs

Surface mounted signs shall be provided with 1/16 inch thick vinyl foam tape or countersunk mounting holes in plaques and mounting screws.

2.4 GRAPHICS

2.4.1 Tactile Graphics

Signage that provides permanent general circulation directions, or identification of spaces shall be tactile (perceptible to touch) and shall comply with 36 CFR 1191. The 36 CFR 1191 requirements must provide equal or greater accessibility than the requirements of FED-STD 795. Characters, symbols, or pictographs on tactile signs shall meet 36 CFR 1191 Grade 2 braile. Characters and symbols shall contrast with their background.

2.4.2 Graphics Application

Signage graphics shall conform to the following:

a. Tactile characters and symbols shall be raised 1/32 inch minimum from the sign face. Signs shall be of one piece construction. Add-on characters are not acceptable. Pictographs shall be as indicated.

2.5 ANCHORS AND FASTENERS

Anchorage system shall be of the type recommended by the manufacturer of the indicated substrate. Where recommended by signage manufacturer, foam tape pads may be used for anchorage. Foam tape pads shall be minimum 1/16 inch thick closed cell vinyl foam with adhesive backing. Adhesive shall be transparent, long aging, high tech formulation on two sides of the vinyl foam. Adhesive surfaces shall be protected with a 5 mil green flatstock treated with silicone. Foam pads shall be sized for the signage as per signage manufacturers recommendations.

2.6 FABRICATION AND MANUFACTURE

2.6.1 Workmanship

Holes for bolts and screws shall be drilled or punched. Drilling and punching shall produce clean, true lines and surfaces. Exposed surfaces of work shall have a smooth finish and exposed riveting shall be flush. Fastenings shall be concealed where practicable.

2.6.2 Dissimilar Materials

Where dissimilar metals are in contact, the surfaces will be protected to prevent galvanic or corrosive action.

PART 3 - EXECUTION

3.1 INSTALLATION

Signs shall be installed in accordance with approved manufacturer's instructions at locations shown on the drawings. Signs shall be installed plumb and true at mounting heights indicated, and by method shown or specified. Signs on doors or other surfaces shall not be installed until finishes on such surfaces have been installed.

3.1.1 Anchorage

Anchorage shall be in accordance with approved manufacturer's instructions. Anchorage not otherwise specified or indicated shall include slotted inserts, expansion shields, and power-driven fasteners when approved for concrete; toggle bolts and through bolts for masonry; machine carriage bolts for steel; lag bolts and screws for wood.

3.1.2 Protection and Cleaning

The work shall be protected against damage during construction. Hardware and electrical equipment shall be adjusted for proper operation. Glass, frames, and other sign surfaces shall be cleaned in accordance with the manufacturer's approved instructions.

- - o 0 o - -

SECTION 10508 - METAL LOCKERS

PART 1 - GENERAL

1.1 REFERENCES

The publications listed below form a part of this specification to the extent referenced. The publications are referred to in the text by basic designation only.

FEDERAL SPECIFICATIONS (FS)

FS AA-L-00486 (Rev H; Am 1, Notice 1) Lockers, Clothing, Steel

1.2 SUBMITTALS

Government approval is required for submittals with a "GA" designation; submittals having an "FIO" designation are for information only. The following shall be submitted in accordance with Section 01330 SUBMITTAL PROCEDURES:

SD-01 Data

Metal Lockers; FIO.

Manufacturer's Catalog Data

SD-04 Drawings

Metal Lockers; FIO.

Furnish installation details. The manufacturer's printed literature will be acceptable in lieu of detail drawings provided this literature accurately shows the items proposed to be furnished and the method of installation.

PART 2 - PRODUCTS

2.1 METAL LOCKERS

Lockers shall be fabricated to meet Lyon's heavy dutty lockers or equal and shall provide a lifetime product warranty. Locker type shall be sectional groups, size as indicaded in drawings or the next largest manufacturer's standard size. Lockers shall have louvered doors and shall be lockable. Color shall be selected from the manufacturer's standard colors.

PART 3 - EXECUTION

3.1 INSTALLATION

Metal lockers shall not be installed until after the room painting and finishing operations are complete. Damaged, spotted, or otherwise defective lockers shall be removed and replaced with new lockers or repaired to the original state at no additional cost to the Government.

3.2 SCHEDULE

Metal lockers shall be provided in rooms noted on the drawings

- - o O o - -

SECTION 10800A - TOILET ACCESSORIES

PART 1 - GENERAL

1.1 REFERENCES

The publications listed below form a part of this specification to the extent referenced. The publications are referred to in the text by basic designation only.

COMMERCIAL ITEM DESCRIPTIONS (CID)

CID A-A-2380	(Basic) Dispenser, Paper Towel

FEDERAL SPECIFICATIONS (FS)

FS DD-M-411	(Rev C) Mirrors, Glass
FS WW-P-541/GEN	(Rev E; Am 1) Plumbing Fixtures
FS WW-P-541/8	(Rev B; Am 1) Plumbing Fixtures (Accessories, Land Use)

1.2 SUBMITTALS

Government approval is required for submittals with a "GA" designation, submittals having an "FIO" designation are for information only. The following shall be submitted in accordance with Section 01330 - SUBMITTAL PROCEDURES:

SD-01 Data

Finishes; FIO.

Accessory Items; FIO.

Manufacturer's descriptive data and catalog cuts indicating materials of construction, fasteners proposed for use for each type of wall construction, mounting instructions, and operation instructions.

1.3 DELIVERY, STORAGE, AND HANDLING

Toilet accessories shall be wrapped for shipment and storage, delivered to the jobsite in manufacturer's original packaging and stored in a clean, dry area protected from construction damage and vandalism.

PART 2 - PRODUCTS

2.1 MANUFACTURED UNITS

Toilet accessories shall be provided where indicated in accordance with paragraph SCHEDULE. Each accessory item shall be complete with the necessary mounting plates.

2.1.1 Anchors and Fasteners

Anchors and fasteners shall be capable of developing a restraining force commensurate with the strength of the accessory to be mounted and shall be suited for use with the supporting construction. Exposed fasteners shall be of tamperproof design and shall be finished to match the accessory.

2.1.2 Finishes

Finishes on metal shall be provided as follows:

Metal	Finish
Stainless steel	No. 4 satin finish
Carbon steel, copper alloy, and brass	Chromium plated, bright

2.2 ACCESSORY ITEMS

Accessory items shall conform to the requirements specified below. Sizes shall be in accordance with paragraph SCHEDULE.

2.2.1 Grab Bar (GB)

Grab bar shall conform to FS WW-P-541/GEN and FS WW-P-541/8, Type IV, Class 2, 1-1/4 inches OD stainless steel. Concealed mounting flange shall have set screw mounting holes concealed on the lip of the flange. Grab bar shall have peened non-slip surface. Installed bars shall be capable of withstanding a 2.225 kN, 500 pound vertical load without obvious permanent deformation.

2.2.2 Mirror, Glass (MG)

Glass mirror shall conform to FS DD-M-411, Class 2, Style E Grade 1.

2.2.3 Mirror, Metal (MM)

Metal mirror shall be bright polished stainless steel or chromium plated steel, mirror quality, 0.037 inch minimum thickness, edges turned back 1/4 inch and recess fitted with tempered hardboard backing, and concealed theft-proof fasteners.

2.2.4 Sanitary Napkin and Tampon Disposer (SND)

Sanitary napkin and tampon disposal shall be constructed of Type 304 stainless steel disposable liner type and shall conform to FS WW-P-541/GEN and FS WW-P-541/8, Type I, Class 1, Style P (wall mounted). Fifty disposable liners of the type standard with the manufacturer shall be provided.

2.2.5 Soap Dispenser (SD)

Soap dispenser shall be surface mounted, liquid type consisting of a vertical Type 304 stainless steel tank with holding capacity of 40 fluid ounces with a corrosion-resistant all-purpose valve that dispenses liquid soaps, lotions, detergents and antiseptic soaps.

2.2.6 Shelf, Metal, Heavy Duty (SMHD)

Heavy duty metal shelf shall conform to FS WW-P-541/GEN and FS WW-P-541/8, Type V, Class 2, stainless steel with hemmed edges. Separate supports shall be stainless steel.

2.2.7 Toilet Tissue Dispenser (TTD)

Toilet tissue holder shall be Type II - surface mounted with two rolls of tissue stacked vertically. Cabinet shall be stainless steel, satin finish.

2.2.8 Toilet Seat Cover Dispenser (TSCD)

Toilet seat cover dispensers shall conform to FS WW-P-541/8, Type 1, Class 1, Style S, (surface mounted) and shall have a capacity of 200 seat covers.

2.2.9 Electric Hand Dryer (EHD)

Electric hand dryer shall be as manufactured by World Dryer Corporation, Model DA or equal. The dryer shall be wall mounted and shall be designed to operate on 110/125 volts, 60 cycle, single phase alternating current with a heating element core rating of not more than 2300 watts. Dryer housing shall be of single piece construction and shall be stainless steel. The dryer shall have high perfomance, maximum durability, and be vandal resistant. It shall deliver 7300 linear feet per minute of air velocity. The cover construction shall be 14 gage 304 stainless steel with a high polished mirror finish.

PART 3 - EXECUTION

3.1 INSTALLATION

Toilet accessories shall be securely fastened to the supporting construction in accordance with the manufacturer's approved instructions.

3.2 SCHEDULE

Accessories Required

Room	MM	MG	EHD	SND	SD	SMHD	TTD	TSCD	GB	
109FC							1			
111FC			1	1		1		1	1	1
112FC			1	1	1	1		1	1	1
104PV		1		1		1		1	1	
106PV		1		1		1		1	1	
107PV		1		1		1		1	1	
108PV		1		1		1		1	1	1
111PV			1	1	1	1		1	1	1
112PV			1	1		1		1	1	1

- - o 0 o - -

SECTION 13158

PALLET RACK SYSTEM

PART 1 - GENERAL

1.1 SUMMARY

Floor mounted metal pallet rack system to hold clothing, shoes and other personal articles. Racks shall be designed to fit in Rooms 101, 102 and 103 of the Processing & Visitation building. The Contractor shall submit drawings of the layouts of each room for approval prior to start of work.

1.2 REFERENCES

The publications listed below form a part of this specification to the extent referenced. The publications are referred to in the text by basic designation only.

AMERICAN SOCIETY FOR TESTING AND MATERIALS (ASTM)

ASTM A 123	(1989a) Zinc (Hot-Dip Galvanized) Coatings on Iron and Steel Products
ASTM A 446	(1993) Steel Sheet, Zinc-Coated (Galvanized) by the Hot-Dip Process, Structural (Physical) Quality
ASTM A 525	(1993) General Requirements for Steel Sheet, Zinc-Coated (Galvanized) by the Hot-Dip Process

AMERICAN WELDING SOCIETY (AWS)

AWS D1.1	(1994) Structural Welding Code - Steel

1.3 GENERAL REQUIREMENTS

The Contractor shall verify all measurements and shall take all field measurements necessary before fabrication. Items specified to be galvanized, when practicable and not indicated otherwise, shall be hot-dip galvanized after fabrication. Galvanizing shall be in accordance with ASTM A 123, ASTM A 446, or ASTM A 525, as applicable. Exposed fastenings shall be compatible materials, shall generally match in color and finish, and shall harmonize with the material to which fastenings are applied. Materials and parts necessary to complete each item, even though such work is not definitely shown or specified, shall be included. Poor matching of holes for fasteners shall be cause for rejection. Thickness of metal and details of assembly and supports shall provide strength and stiffness.

1.3.1 Standard Products

Pallet storage racks shall be the standard products of manufacturers regularly engaged in the manufacture of storage rack systems.

1.3.2 Codes

Meet all applicable codes.

1.4 SUBMITTALS

Government approval is required for submittals with a "GA" designation; submittals having an "FIO" designation are for information only. The following shall be submitted in accordance with Section 01330 SUBMITTAL PROCEDURES:

SD-01, Data

Shop Drawings; FIO.

Submit shop drawings indicating size, layout, number of bays, type of materials and connection to floor. Submittal shall also include the manufacturer's standard line of colors.

1.5 WARRANTIES

The pallet rack system shall be guaranteed against breakage and deformation of system components arising out of or caused by ordinary wear and tear for a period of 1 year.

1.6 DELIVERY AND STORAGE

Materials shall be delivered to the site in a dry and undamaged condition and stored out of contact with the ground. Materials shall be covered with weathertight coverings and kept dry.

PART 2 - PRODUCTS

2.1 GENERAL REQUIREMENTS

Contract drawings indicate extent of the pallet rack system. Members and connections not indicated on the drawings shall be designed by the manufacturer. All pallet rack system components furnished shall be the products of the same manufacturer.

2.2 MATERIALS

2.2.1 Columns

Metal with cross section of size to carry specified weights. Columns to have side load lock holes.

2.2.2 Beams

Metal cross section of size to carry specified weights. Connection of beam to column to be rigid and form as stable system. Beam to have integral safety load lock.

2.2.3 Accessories

Rigid beam/column connector, bolts, floor plates, etc., to form a complete, stable floor mounted system. Size base plates to meet seismic requirements. Locate plate so edge is not beyond pallet container and aisle line

2.3 FINISHES

All metal to be factory finished. Color shall be selected by the Contracting Officer's representative from the manufacturer's standard line.

PART 3 - EXECUTION

3.1 INSTALLATION

Verify that substrate and building conditions are ready to receive work. Locate and connect columns to floor with plate and anchor system according to manufacturer's instructions. Erect frame according to manufacturer's instructions. Make all connections necessary to form a rigid complete system ready for owner's use.

3.2 TOLERANCES

Variation from flat and level both vertical and horizontal: 1/8" in 10 feet.

- - o 0 o - -

SECTION 13958

FORCED ENTRY RESISTANT COMPONENTS

PART 1 - GENERAL

1.1 REFERENCES

The publications listed below form a part of this specification to the extent referenced. The publications are referred to in the text by basic designation only.

AMERICAN SOCIETY FOR TESTING AND MATERIALS (ASTM)

ASTM D 256	(1993a) Determining the Pendulum Impact of Notched Specimens of Plastic
ASTM D 542	(1990) Index of Refraction of Transparent Organic Plastics
ASTM D 570	(1981; R 1988) Water Absorption of Plastics
ASTM D 635	(1991) Rate of Burning and/or Extent and Time of Self-Supporting Plastics in a Horizontal Position
ASTM D 637	(1990) Surface Irregularities of Flat Transparent Plastic Sheets
ASTM D 638	(1994b) Tensile Properties of Plastics
ASTM D 648	(1982; R 1988) Deflection Temperature of Plastics Under Flexural Load
ASTM D 696	(1991) Coefficient of Linear Thermal Expansion of Plastics Between minus 30 degrees C and 30 degrees C
ASTM D 792	(1991) Density and Specific Gravity (Relative Density) of Plastics by Displacement
ASTM D 882	(1991) Tensile Properties of Thin Plastic Sheeting
ASTM D 905	(1989) Strength Properties of Adhesive Bonds in Shear by Compression Loading
ASTM D 1003	(1992) Haze and Luminous Transmittance of Transparent Plastics
ASTM D 1044	(1994) Resistance of Transparent Plastics to Surface Abrasion

ASTM D 1922	(1993) Propagation Test Resistance of Plastic Film and Thin Sheeting by Pendulum Method
ASTM D 3029	(1993) Impact Resistance of Flat Rigid Plastic Specimens by Means of a Tup (Falling Weight)
ASTM D 3595	(1991) Polychlorotrifluoroethylene (PCTFE) Extruded Plastic Sheet and Film
ASTM D 3951	(1990) Commercial Packaging
ASTM D 4093	(1993) Photoelastic Measurements of Birefringence and Residual Strains in Transparent or Translucent Plastic Materials
ASTM D 4802	(1994) Poly(Methyl Methacrylate) Acrylic Plastic Sheet
ASTM E 90	(1990) Laboratory Measurement of Airborne Sound Transmission Loss of Building Partitions
ASTM E 168	(1992) General Techniques of Infrared Quantitative Analysis
ASTM E 169	(1993) General Techniques of Ultraviolet-Visible Quantitative Analysis
ASTM E 204	(1992) Identification of Material by Infrared Absorption Spectroscopy, Using the ASTM Coded Band and Chemical Classification Index
ASTM E 831	(1993) Linear Thermal Expansion of Solid Materials by Thermomechanical Analysis
ASTM E 1300	(1994) Determining the Minimum Thickness and Type of Glass Required to Resist a Specific Load
ASTM F 428	(1983; R 1989) Test Method for Intensity of Scratches on Aerospace Glass Enclosures
ASTM F 520	(1977; 1989) Environmental Resistance of Aerospace Transparencies
ASTM F 521	(1983; 1989) bond Integrity of Transparent Laminates
ASTM F 548	(1981; R 1994) Test Method for Intensity of Scratches on Aerospace Transparent Plastics
ASTM F 735	(1994) Abrasion Resistance of Transparent Plastics and Coatings Using the Oscillating Sand Method
ASTM F 791	(1982; 1988) Stress Crazing of Transparent Plastics

ASTM F 1233	(1993) Security Glazing Materials and Systems
ASTM G 26	(1993) Operating Light-Exposure Apparatus (Xenon-Arc Type) With and Without Water for Exposure of Nonmetallic Materials

DEPARTMENT OF STATE (SD)

SD Std-01.01	(Rev G Amended; Inx Certified Prod/Mfg) Certification Standard Forced Entry and Ballistic Resistance of Structural Systems

DOOR AND HARDWARE INSTITUTE (DHI)

DHI A115.1	(1990) Preparation of 1-3/8" and 1-3/4" Standard Steel Doors and Steel Frames for Series 1000 Mortise Locks and Latches

FLAT GLASS MARKETING ASSOCIATION (FGMA)

FGMA-01	(1990) Glazing Manual

H. P. WHITE LABORATORIES (HPW)

HPW TP-0500.02	(1993) Transparent Materials and Assemblies for Use in Forced Entry or Containment Barriers
HPW TP-0502.01	(1989) Forced Entry Resistance of Structural Materials (Opaque and Transparent); Test Procedures and Acceptance Criteria
HPW TP-0506.00	(1993) Forced Entry Resistance of Security Structures and Structural Subassemblies VERY LOW THREAT LEVEL
HPW TP-0507.00	(1993) Forced Entry Resistance of Security Structures and Structural Subassemblies LOW THREAT LEVEL
HPW TP-0508.00	(1993) Forced Entry Resistance of Security Structures and Structural Subassemblies MEDIUM THREAT LEVEL
HPW TP-0509.00	(1993) Forced Entry Resistance of Security Structures and Structural Subassemblies HIGH THREAT LEVEL

NATIONAL ASSOCIATION OF ARCHITECTURAL METAL MANUFACTURERS (NAAMM)

NAAMM HMMA 801	(1987) Glossary of Terms for Hollow Metal Door and Frames
NAAMM HMMA 802	(1992) Manufacturing of Hollow Metal Doors and Frames

NAAMM HMMA 810	(1987) Hollow Metal Manual; Section: Manufacturing of Hollow Metal Doors and Frames
NAAMM HMMA 820	(1987) Hollow Metal Manual; Section: Hollow Metal Frames
NAAMM HMMA 830	(1987) Hollow Metal Manual; Section: Hardware Preparation and Locations for Hollow Metal Doors and Frames

PHYSICAL ATTACK TEST

WMFL LEVEL III	(1994) Security Glazing Test, 30 minute attack. "Walker McGough, Foltz & Lyerla", perfomance by Warnack Hersey.

1.2 COMPONENT DESCRIPTION

Components covered in this specification are designed to resist forced entry attacks with increasing severity levels of hand, power, and thermal tools and weapons and explosives. The components include forced entry resistant personnel door/frame assemblies windows, glazing for doors, pass-through drawers. Each type of forced entry resistant component shall be a complete assembly produced by a single manufacturer except that interior windows may have 30 minute attack resistant glazing in extra heavy dutty steel frames provided by different manufacturers but glazing shall be installed in accordance with the manufacturers written instructions. Movable and operable components shall operate smoothly and freely. Items for exterior installation shall be designed to resist water and vapor penetration or entrapment.

1.3 SUBMITTALS

Government approval is required for submittals with a "GA" designation; submittals having an "FIO" designation are for information only. The following shall be submitted in accordance with Section 01330 - SUBMITTAL PROCEDURES:

SD-01 Data

Forced Entry Resistant Components; FIO.

Manufacturer's descriptive data and finish samples. The forced entry resistant door lock functions, for selection by the Contracting Officer. Airflow calculations for louvers.

SD-04 Drawings.

Forced Entry Resistant Components; FIO.

Drawings showing anchorage of components and appurtenances into the actual surrounding construction and clearances for operation. Drawings sufficient to show hardware location and installation details. Complete drawings for forced entry resistant prefabricated guardhouses.

SD-06 Instructions

Forced Entry Resistant Components; FIO.

A copy of installation instructions and recommended cleaning and maintenance instructions.

SD-07 Schedules

Forced Entry Resistant Components; FIO.

Lists including schedule of components to be incorporated in the work with manufacturer's model or catalog numbers, specification and drawing reference numbers, warranty information, threat level designated, insulation "U" value, and number of items provided. Listing of similar products that have been satisfactorily in use for two years or more, including name of purchasers, locations of installations, dates of installations, and service organizations.

SD-13 Certificates

Forced Entry Resistant Components; FIO.

Manufacturer's certificates attesting that components conform to the requirements on drawings and in specifications. Testing reports from independent testing laboratories indicating conformance to regulatory requirements shall be included. Certificate shall indicate compliance with the requirements for doors of the type and fire rating class. Manufacturer shall certify that compliance with the installation instructions and/or drawings will provide the specified degree of forced entry resistance.

1.4 STANDARD PRODUCTS

Each type of forced entry resistant component shall be the standard product of a manufacturer regularly engaged in the manufacture of such products and shall duplicate items that have been tested and approved in accordance with the forced entry test standard specified in References, the front of this specification section. Forced Entry Resistant assemblies and components shall be rated for 30 minute attack resistance. Manufacturer's descriptive data, installation instructions, and certificate and test report showing compliance with the specified forced entry test standard shall be submitted for all components. Drawings shall be submitted. Manufacturer's certificate shall be submitted indicating that compliance with the installation instructions and drawings will provide the specified degree of forced entry resistance.

1.5 QUALIFICATIONS

Welding procedures, welders, and welding operators shall be qualified in accordance with AWS D1.1.

1.6 DELIVERY, STORAGE, AND HANDLING

Components shall be delivered to the job site with the manufacturer, name, and model number clearly marked thereon. Components shall be delivered, stored, and handled so as not to be damaged or deformed and shall be in accordance

with ASTM D 3951. Components shall be handled carefully to prevent damage to the faces, edges, corners, ends, and glazing where applicable. Abraded, scarred, or rusty areas shall be cleaned, repaired, or replaced immediately upon detection of the damage. Damaged components that cannot be restored shall be replaced. Components and equipment shall be stored in a dry location on platforms or pallets that are ventilated adequately, free of dust, water, and other contaminants, and stored in a manner which permits easy access for inspection and handling.

1.7 SEQUENCING AND SCHEDULING

When testing of a previously untested component is specified, sufficient lead time shall be allowed so that testing will not delay construction. The test results and component shall be approved by the Contracting Officer before delivery of the component to the job site.

1.8 WARRANTY

Manufacturer's warranty for 5 years shall be furnished for glazing materials. Warranty shall provide for replacement and installation of glazing if delamination, discoloration, or cracking or crazing occurs.

PART 2 - PRODUCTS

2.1 FORCED ENTRY RESISTANT PERSONNEL DOOR AND FRAME ASSEMBLIES

Doors and frames shall be factory fabricated assemblies. Sizes shall be as indicated. Doors shall be of steel. Interior composition and reinforcement shall be determined by the manufacturer. Rubber silencers shall be installed on door frames. Doors construction shall be seamless and shall have top edges closed flush and sealed against water penetration, be insulated, and shall be provided with weatherstripping and thresholds. Locks and hinges shall be the same or equal in performance and number as the hardware used on the tested door. Lock and hardware shall be provided by the manufacturer as a complete assembly. Frames shall be furnished by the door fabricator, with anchorage to wall construction completely specified as to number of anchors, anchor size, material, and length.

2.1.1 Door and Frame Fabrication

The subsurfaces shall be flat, parallel, and plumb after fabrication. Doors shall be reinforced in accordance with manufacturer's design. Door frames shall be anchored as specified by the door manufacturer. The Contractor shall coordinate the door manufacturer's requirements for welding to wall reinforcement or casting frame embedments into wall before wall is placed. Steel door frames shall be mitered or coped and welded at the corners with welds ground smooth. Where structural channel frames are used the size, weight, stops, welding, and anchorage into surrounding construction must be specified and tested along with the door as an assembly. Any necessary reinforcements in the door and the frame shall be made in the factory. Door and frame shall be drilled and tapped as required for the specified hardware. Frame channels shall be mitered or coped and welded at corners with full penetration groove welds. Exposed welds shall be dressed smooth. Hollow metal doors and frames shall be manufactured in accordance with NAAMM HMMA

801, NAAMM HMMA 802, NAAMM HMMA 810, and NAAMM HMMA 820 as a standard of quality, and shall meet the specified forced entry testing standard.

2.1.2 Sidelight Frames and Door Glazing

Sidelight frames shall be constructed using forced entry resistant door frame sections. For glazing in door or sidelight, stop height and rabbet depth shall be as required to accommodate the glazing material that is resistant to the forced entry test standard specified. The assembly shall be tested with the specified glazing and stops installed. Exterior (attack side) glazing stops shall be welded or integral to the frame. Interior (protected side) glazing stops shall be removable stops attached with high-strength alloy steel machine screws with tamper-resistant heads or as required by the manufacturer. Glazing is specified in paragraph Forced Entry Resistant Glazing Materials.

2.1.3 Preparation for Hardware

Doors and frames shall be prepared for hardware in accordance with manufacturer's instructions. Surface applied hardware shall be drilled and tapped in the field.

2.1.4 Hardware

Hardware for forced entry resistant door assemblies shall be provided by the door assembly manufacturer to ensure a complete forced entry resistant assembly. Where test standard requires hardware to be tested with the door assembly, locks and hinges shall be included in the labeling and/or test certification. Locks and hinges shall be the same or equal in performance, quality, grade, and quantity as used on the successfully tested door assembly in accordance with the specified forced entry testing standard. The Contractor shall provide certification that the locks, latches, and hinges provide the same degree of forced entry resistance as required by the specified forced entry testing standard. Keying shall be as specified in Section 08700A - BUILDERS' HARDWARE.

2.1.4.1 Locks and Latchsets

The door manufacturer shall submit available lock functions for selection of function by the Contracting Officer. Mortise lock and latchsets shall be, as a minimum, series 1000, operational Grade 1, Security Grade 1 or 1A, and shall conform to BHMA A156.13. Strikes for mortise locks and latches (including deadbolt locks), as a minimum, shall conform to DHI A115.1 except strikes shall be rectangular (without curved lip). Mortise-type locks and latches for doors 1-3/4 inches thick and over shall have adjustable bevel fronts or otherwise conform to the shape of the door. Mortise locks shall have armored fronts. Mortise locks and latches shall have full escutcheon, through-bolted, extruded stainless steel trim. Lock finish shall be 652 in accordance with BHMA A156.18.

2.1.4.2 Hinges

Steel doors and frames required to resist the "very low" or "low" threat severity level that are up to and including 7 feet 0 inches high shall, as a minimum, be equipped with three Grade 1 hinges in accordance with BHMA A156.1,

minimum size 5 inches high, heavy, double, or triple weight as required for weight of door. For each additional 12 inches of door height beyond 7 feet 0 inches, provide a minimum of one more hinge. Hinges shall be full mortise, design as recommended by the manufacturer for frame and door design and shall be tamperproof. Hinges shall have security pins and be equipped with a safety stud. Spot welding of hinge pin will not be acceptable. The Contractor shall provide hinge manufacturer's certification that the hinge supplied meets applicable test requirements for BHMA A156.1 type number of hinge specified and that the hinge is suitable for the size and weight of the door assembly on which it will be utilized. Continuous extra heavy-duty piano-type hinge sized to carry the weight of the door without sagging is permitted. If continuous piano-type hinges are provided with the door, independent laboratory reports covering both the door weight capacity and a 2,500,000 cycle testing to match the BHMA A156.1 Grade 1 requirements shall be furnished by the Contractor. Interior door hinges shall be furnished in prime coated steel. Exterior door hinges shall be furnished in stainless steel.

2.1.4.3 Door Closers

Closers shall be extra heavy duty of size and type recommended by the manufacturer and shall be Grade 1 conforming to BHMA A156.4. Door closer finish shall be 652 in accordance with BHMA A156.18.

2.1.4.4 Door Stops and Holders

Door stops and holders shall be extra heavy duty, conforming to BHMA A156.16, Type L11251 for floor mounted installation BHMA A156.16, Type L11271 for wall mounted installation.

2.1.5 Frame Anchors

Jamb and head anchors shall be provided with door/frame assembly and shall be as specified by the manufacturer and forced entry resistant to the same degree as the component. Contractor shall coordinate concrete work with component manufacturers when the manufacturer specifies frame anchors to be embedded into a concrete or concrete masonry unit surface during construction.

2.1.6 Weatherstripping

Head and jambs of exterior doors shall be provided with compression-type neoprene bulb or closed-cell neoprene adjustable type weatherstripping. Door stops shall be weatherstripped with a surface-mounted sponge neoprene strip in bronze housing not less than 0.070 inch thick installed to make contact with the door. Weatherstripping shall be installed in conformance with the manufacturer's directions after completion of finish painting.

2.2 FORCED ENTRY RESISTANT WINDOW ASSEMBLIES

Forced entry resistant window assemblies shall be constructed using forced entry resistant frame sections. Frames shall be welded units of sizes and shapes indicated with minimum frame face dimensions of 2 inches. Frame anchorage shall be as specified by the manufacturer and forced entry resistant to the same degree as the component. Top height and rabbet depth shall be as required to accommodate the glazing material resistant to the forced entry

test standard specified. Exterior (attack side) glazing stops shall be welded to or integral to the frame. Interior (protected side) glazing stops shall be removable stops attached with high-strength alloy steel machine screws with tamper-resistant heads, or as required by the manufacturer.

2.2.1 Forced Entry Resistant Glazing Material

Glazing material shall be plastic, or composite and shall conform to applicable requirements ASTM C 1036, ASTM E 1300, and ASTM C 1048, and shall be rated for WMFL Attack Test, Level 3, 30 minutes. Glazing materials shall be tested in accordance with the applicable sections of the following test procedures: ASTM D 905, ASTM D 1003, ASTM F 428, ASTM F 548, ASTM D 4093, and ASTM F 520. Plastic glazing shall be polycarbonate plastic sheets, or approved equal. Plastic glazing shall be smooth and clear on both sides. Glazing material shall be factory installed. Factory-glazed components shall be covered to protect them from damage during adjacent finish work. Glazing material shall be as manufactured by Viracon product code LPC-375 2-ply Polycarbonate or approved equal. The glazing material shall have the following testing certification: WMFL Level III, H.P. White Level A Ballistics, H.P. White Level II (Step 10), ASTM F1233-93 Class III Sequence 12.

2.2.1.1 Polycarbonate Plastic Sheets

Polycarbonate plastic sheet shall be laminated or solid, ultraviolet stabilized flame resistant high abrasion resistant sheets shall conform to ASTM D 3595. Polycarbonate materials shall be tested in accordance with the applicable sections of the following testing procedures: ASTM D 256, ASTM D 3029, ASTM D 648, ASTM D 792, ASTM F 735, ASTM D 1003, ASTM D 635, ASTM D 638, ASTM D 1044, ASTM D 882, ASTM D 637, ASTM D 1922, ASTM D 570, ASTM F 520, ASTM E 168, ASTM E 169, ASTM E 204, ASTM G 26, and ASTM F 791. Polyvinyl butyryl shall not be used in contact with polycarbonate because its plasticizer may craze polycarbonate.

2.2.1.2 Glass/Plastic Laminate Glazing

Glass/plastic laminated glazing materials shall be glass/plastic laminated construction or glass-clad plastic "sandwich" construction conforming to applicable sections of ASTM C 1172.

2.2.2 Adhesive Interlayer Materials

Adhesive interlayer material for bonding laminates (glass-plastic, or plastic-plastic bonds) shall be chemically compatible with the surfaces bonded. Interlayer materials may be polyvinyl butyryl, cast-in-place urethane, proprietary materials, sheet from urethane and other materials. Polyvinyl butyryl shall not be used to bond polycarbonate. Adhesives shall conform to ASTM D 905 and the manufacturer's recommendations.

2.2.3 Sealants

Sealants for glazings shall be chemically compatible with the glazing materials they are in contact with and shall have no deleterious effects to the glazing materials or to the adhesives used in glazing laminates. Sealants

shall conform to the glazing manufacturer's recommendations and the requirements of FGMA-01.

2.3 ACCESSORIES

Accessories shall be provided for the installation of components into the surrounding structure. Anchorage shall be forced entry resistant to the same degree as the component. Installation shall be in accordance with the manufacturer's recommended instructions. Materials, parts, bolts, anchors, supports, braces, fasteners, and connections necessary for completion of the work.

2.4 LABELING

Forced entry resistant components shall be plainly and permanently labeled as to the applicable forced entry test standard and level within the test standard under which the component was tested and approved. Label shall be visible only from the protected side after component installation and shall include the following information: (1) manufacturer's name or identifying symbol; (2) model number, control number, or equivalent; (3) date of manufacture with the week, month or quarter, and year (this may be abbreviated or be in a traceable code such as the lot number); (4) correct mounting position (by removable label); and (5) forced entry resistant rating by indicating the test standard, level within the test standard (if any), and minutes of attack time withstood (if variable in the standard).

2.5 FABRICATION

Components shall be constructed, assembled, welded, and equipped with all hardware and accessories required to complete the assembly in the shop of a competent fabricator.

2.6 FASTENERS

Fasteners exposed to view shall match in color and finish and shall harmonize with the material to which fasteners are applied. Holes for bolts and screws shall be drilled or neatly punched. Poor matching of holes shall be cause for rejection of the work. Fasteners shall be concealed where practicable. Unless otherwise specified, fasteners shall conform to Section 05500 MISCELLANEOUS METAL.

2.7 SHOP/FACTORY FINISHING

Unless otherwise specified, all factory or manufactured components shall be shop finished as indicated below.

2.7.1 Ferrous Metal

Surfaces of ferrous metal, except galvanized and stainless steel surfaces, shall be cleaned and factory primed for painting. Finish painting shall be in accordance with Section 09900 PAINTING, GENERAL. Prior to shop painting, surfaces shall be cleaned with solvents to remove grease and oil and with power wire-brushing or sandblasting to remove loose rust, loose mill scale,

and other foreign substances. Surfaces of items to be embedded in concrete shall not be shop painted.

2.7.2 Galvanizing

Items specified to be galvanized shall be hot-dip processed after fabrication. Galvanizing shall be in accordance with ASTM A 123 or ASTM A 525.

PART 3 - EXECUTION

3.1 PREPARATION AND PROTECTION

The Contractor shall field verify dimensions of rough openings for components and shall verify that surfaces of openings are level, plumb, and provide required clearances. Components shall be examined for racking, twisting, and other malformation and corrected prior to installation. Damaged components that cannot be corrected shall be replaced. The Contractor shall protect surrounding work prior to installation of forced entry resistant components. Surrounding work which is damaged as a result of the installation of forced entry resistant components shall be repaired in an approved manner prior to acceptance. Glazed units shall be protected from damage during adjacent work.

3.2 CORROSION PROTECTION - DISSIMILAR MATERIALS

Contact surfaces between dissimilar metals and aluminum surfaces in contact with concrete, masonry, pressure-treated wood, or absorptive materials subject to wetting shall be given a protective coating in accordance with Section 09900 PAINTING, GENERAL.

3.3 INSTALLATION

The finished work shall be free from defects. Components shall be installed plumb and level and secured rigidly in place. Components shall be installed in accordance with approved manufacturer's recommended instructions. Operable parts of components shall be tested for smooth operation in the presence of the Contracting Officer. The Contractor shall coordinate frame embedments into the construction where required by the component manufacturer. Materials which incur damage as a result of adjacent finish work shall be replaced or repaired as specified above. Window assemblies which are not specified as factory glazed shall have glazing installed in accordance with FGMA-01 and the manufacturer's recommended instructions. Field glazing shall occur only after concrete, masonry, ceiling, electrical, mechanical, plumbing and adjacent finish work has been completed. The Contractor shall be responsible for proper installation of forced entry resistant door assemblies so that operating clearances and bearing surfaces conform to the manufacturer's instructions. The bottom of door frames shall be secured to the floor slab in accordance with the manufacturer's recommendations. Weatherstripping and thresholds shall be installed at exterior door openings to provide a weathertight installation.

3.4 MANUFACTURER'S SERVICES

The manufacturer shall provide the services of a manufacturer's representative who is experienced in the installation, adjustment, and operation of the

component specified. At the request of the Contracting Officer, the representative shall supervise the installation, adjustment, and operation (if operable) of the component. The representative shall be onsite 2 working days.

3.5 ADJUSTING/CLEANING

Adjustments shall be made to assure smooth operation. Units shall be weathertight when closed and locked. All Components shall be cleaned in accordance with manufacturer's instructions. Only cleanser recommended by the manufacturer shall be used to clean polycarbonate, plastic, and applied hardcoats.

- - o 0 o - -

SECTION 15250 - THERMAL INSULATION FOR MECHANICAL SYSTEMS

PART 1 - GENERAL

1.1 REFERENCES

The publications listed below form a part of this specification to the extent referenced. The publications are referred to in the text by basic designation only.

AMERICAN SOCIETY FOR TESTING AND MATERIALS (ASTM)

ASTM A 167	(1991) Stainless and Heat-Resisting Chromium-Nickel Steel Plate, Sheet, and Strip.
ASTM A 580	(1991a) Stainless and Heat Resisting Steel Wire.
ASTM A 641	(1991) Zinc-Coated (Galvanized) Carbon Steel Wire.
ASTM B 209	(1990) Aluminum and Aluminum-Alloy Sheet and Plate.
ASTM C 449	(1988) Mineral Fiber Hydraulic-Setting Thermal Insulating and Finishing Cement.
ASTM C 533	(1985; R 1990) Calcium Silicate Block and Pipe Thermal Insulation.
ASTM C 534	(1988) Preformed Flexible Elastomeric Cellular Thermal Insulation in Sheet and Tubular Form.
ASTM C 547	(1977) Mineral Fiber Preformed Pipe Insulation.
ASTM C 552	(1991) Cellular Glass Thermal Insulation.
ASTM C 553	(1970; R 1977) Mineral Fiber Blanket and Felt Insulation (Industrial Type).
ASTM C 612	(1983) Mineral Fiber Block and Board Thermal Insulation.
ASTM C 647	(1995) Properties and Tests of Mastics and Coating Finishes for Thermal Insulation
ASTM C 795	(1989) Wicking-Type Thermal Insulation for Use Over Austenitic Stainless Steel.

ASTM C 916	(1985; Rev 1996) Adhesives for Duct Thermal Insulation
ASTM C 920	(1987) Elastomeric Joint Sealants.
ASTM C 921	(1989) Determining the Properties of Jacketing Materials for Thermal Insulation.
ASTM D 3278	(1996) Test Methods for Flash Point of Liquids by Small Scale & Closed-Cup Apparatus
ASTM E 84	(1996a) Surface Burning Characteristics of Building Materials
ASTM E 96	(1995) Water Vapor Transmission of Materials

FEDERAL SPECIFICATIONS (FS)

FS L-P-535	(Rev E; Notice 2) Plastic Sheet (Sheeting): Plastic Strip: Poly (Vinyl Chloride) and Poly (Vinyl Chloride-Vinyl Acetate), Rigid.

MANUFACTURERS STANDARDIZATION SOCIETY OF THE VALVE AND FITTINGS INDUSTRY (MSS)

MSS SP-69	(1991) Pipe Hangers and Supports - Selection and Application.

MIDWEST INSULATION CONTRACTORS ASSOCIATION (MICA)

MICA-01	(1988) National Commercial and Industrial Insulation Standards.

NATIONAL FIRE PROTECTION ASSOCIATION (NFPA)

NFPA 90A	(1989) Installation of Air Conditioning and Ventilating Systems.
NFPA 90B	(1989) Installation of Warm Air Heating and Air Conditioning Systems.
NFPA 101	(1991) Safety to Life from Fire in Buildings and Structures.
NFPA 251	(1985) Fire Tests of Building Construction and Materials.

1.2 SYSTEM DESCRIPTION

Field-applied insulation and accessories on mechanical systems shall be as specified herein; factory-applied insulation is specified under the piping, duct or equipment to be insulated.

1.3 GENERAL QUALITY CONTROL

1.3.1 Standard Products

Materials shall be the standard products of manufacturers regularly engaged in the manufacture of such products and shall essentially duplicate items that have been in satisfactory use for at least 2 years prior to bid opening.

1.3.2 Installer's Qualifications

Qualified installers shall have successfully completed three or more similar type jobs within the last 5 years.

1.3.3 Surface Burning Characteristics

Unless otherwise specified, installed insulation materials, adhesives, coatings, and other accessories shall have flame spread ratings and smoke developed ratings in accordance with NFPA 101, NFPA 90A, and NFPA 90B for the type occupancy and location that the material is installed unless the location where the material is installed is used as an air plenum in which case all materials shall have smoke developed ratings not greater than 50 and be non-combustible or limited combustible in accordance with NFPA 90A and NFPA 90B. All insulation shall be tested in the same densities and installed thicknesses as the material that will be used in actual construction applications. Compliance with the smoke developed limitation is not required and a greater flame spread rating up to 100 is permitted for insulation installed within wall assemblies or enclosures with a minimum fire resistance rating of 30 minutes in accordance with NFPA 251, which are not used as supply or return air plenums. Insulation that has been treated with a flame retardant additive to obtain the flame spread and smoke developed ratings shown above are not permitted.

1.3.4 Identification of Materials

Packages or standard containers of insulation, jacket material, cements, adhesives, and coatings delivered for use, and all samples required for approval shall have manufacturer's stamp or label attached giving the name of the manufacturer and brand, and a description of the material.

1.4 SUBMITTALS

Government approval is required for submittals with a "GA" designation; submittals having an "FIO" designation are for information only. The following shall be submitted in accordance with SECTION 01330 - SUBMITTAL PROCEDURES:

SD-01, Data

Thermal Insulation Materials; FIO.

A complete list of materials, including manufacturer's descriptive and technical literature, performance data (including fire resistance ratings), catalog cuts, and installation instructions. Materials furnished under this section of the specification shall be submitted at one time. A schedule

indicating the product number, k-value, thickness and furnished accessories for each mechanical system requiring insulation shall be included.

1.5 STORAGE

Materials shall be delivered in the manufacturer's unopened containers. Materials delivered and placed in storage shall be provided with protection from weather, humidity, dirt, dust and other contaminants by the Contractor. Insulation material and supplies that become dirty, dusty, wet, or otherwise contaminated may be rejected by the Contracting Officer.

PART 2 - PRODUCTS

2.1 GENERAL MATERIALS

Materials shall be compatible and shall not contribute to corrosion, soften, or otherwise attack surfaces to which applied in either the wet or dry state. Materials to be used on stainless steel surfaces shall meet ASTM C 795 requirements. Materials shall be asbestos free and conform to the following:

2.1.1 Adhesives

2.1.1.1 Acoustical Lining Insulation Adhesive

Insulation shall be applied in cut-to-size pieces attached to the interior of the duct with a nonflammable, fire-resistant adhesive conforming to ASTM C 916, Type I. Exposed edges of the liner at the duct ends and at other joints where the lining will be subject to erosion shall be coated with a heavy brush coat of the nonflammable, fire-resistant adhesive to prevent delamination of glass fibers.

2.1.2 Contact Adhesive

Adhesive may be dispersed in a nonhalogenated organic solvent with a low flash point (flash point less than minus 25 degrees F when tested in accordance with ASTM D 3278) or, dispersed in a nonflammable organic solvent which shall not have a fire point below 200 degrees F. The adhesive shall not adversely affect, initially or in service, the insulation to which it is applied, nor shall it cause any corrosive effect on metal to which it is applied. Any solvent dispersing medium or volatile component of the adhesive shall have no objectionable odor and shall not contain any benzene or carbon tetrachloride. The dried adhesive shall not emit nauseous, irritating, or toxic volatile matters or aerosols when the adhesive is heated to any temperature up to 212 degrees F. The adhesive shall be nonflammable and fire resistant.

2.1.3 Caulking

ASTM C 920, Type S, Grade NS, Class 25, Use A.

2.1.4 Corner Angles

Nominal 0.016-inch aluminum 1-inch by 1-inch with factory applied kraft backing. Aluminum shall be ASTM B 209, Alloy 3003, 3105, or 5005.

2.1.5 Finishing Cement

Mineral fiber hydraulic-setting thermal insulating cement ASTM C 449.

2.1.6 Fibrous Glass Cloth and Glass Tape

Fibrous glass cloth and glass tape shall have flame spread and smoke developed ratings of no greater than 25/50 when measured in accordance with ASTM E 84. Fibrous glass cloth and tape shall be 20 x 20 maximum size mesh. Tape shall be 4 inch wide rolls. Class 3 tape shall be 4.5 ounces per square yard.

2.1.7 Staples

Outward clinching type monel or ASTM A 167, Type 304 or 316 stainless steel.

2.1.8 Jackets

ASTM C 921, Type I, moisture vapor transmission maximum 0.02 perms, puncture resistance minimum 50 Beach units on all surfaces except concealed ductwork, where a minimum puncture resistance of 25 Beach units is allowable, tensile strength minimum 35 pound/inch width; Type II, puncture resistance minimum 25 Beach units, tensile strength minimum 20 pound/inch width. Aluminum jackets shall be corrugated, embossed or smooth sheet, 0.016-inch nominal thickness; ASTM B 209, Temper H14, Temper H16, Alloy 3003, 5005, or 3105 with factory applied moisture barrier. Corrugated aluminum jacket shall not be used outdoors. Aluminum jacket securing bands shall be Type 304 stainless steel, 0.015-inch thick, 1/2-inch wide for pipe under 12-inch diameter and 3/4-inch wide for pipe over 12-inch diameter.

Aluminum jacket circumferential seam bands shall be 2-inch by 0.016-inch aluminum matching jacket material. Bands for insulation belowground shall be 3/4-inch by 0.020-inch thick stainless steel, or fiberglass reinforced tape. The jacket may, at the option of the Contractor, be provided with a factory fabricated Pittsburg or "Z" type longitudinal joint. When the "Z" joint is used, the bands at the circumferential joints shall be designed by the manufacturer to seal the joints and hold the jacket in place. Polyvinyl chloride (PVC) jacket and fitting covers shall be FS L-P-535, Composition A, Type II, with minimum thickness 0.030-inch. Insulation under PVC jacket shall meet jacket manufacturer's written recommendations.

2.1.9 Vapor Retarder Coating

The vapor retarder coating shall be fire and water resistant and appropriately selected for either outdoor or indoor service. Color shall be white. The water vapor permeance of the compound shall not exceed 0.05 perm and shall be determined according to procedure B of ASTM E 96 utilizing apparatus described in ASTM E 96. The coating shall be a nonflammable, fire resistant type. The flash point of the compound shall not be less than 80 degrees F and shall be determined in accordance with ASTM D 3278. All other application and service properties shall be in accordance with ASTM C 647.

2.1.10 Wire

Soft annealed ASTM A 580 Type 302, 304 or 316 stainless steel, 16 or 18 gauge.

2.2 PIPE INSULATION MATERIALS

Pipe insulation materials shall be as follows:

2.2.1 Aboveground Cold Pipeline

Insulation for (Minus 30 degrees to Plus 60 degrees F) shall be as follows:

2.2.1.1 Flexible Cellular Insulation

ASTM C 534, Type I.

2.2.2 Aboveground Hot Pipeline (Above 60 degrees F) Insulation

2.2.2.1 Flexible Cellular Insulation

ASTM C 534, Type I to 200 degrees F service.

2.3 DUCT INSULATION MATERIALS

Duct insulation materials shall be as follows:

2.3.1 Rigid Mineral Fiber

ASTM C 612, Class 1.

2.3.2 Cellular Glass

ASTM C 552, Type I.

PART 3 - EXECUTION

3.1 APPLICATION - GENERAL

3.1.1 Installation

Except as otherwise specified, material shall be installed in accordance with the manufacturer's written instructions. Insulation materials shall not be applied until tests and heat tracing specified in other sections of this specification are completed. Material such as rust, scale, dirt and moisture shall be removed from surfaces to receive insulation. Insulation shall be kept clean and dry at all times. Insulation shall not be removed from its shipping containers until the day it is ready to use and shall be returned to like containers or equally protected from dirt and moisture at the end of each workday. Insulation that becomes dirty shall be thoroughly cleaned prior to use. If insulation becomes wet or if aforementioned cleaning does not restore the surfaces to like new condition, the insulation may be rejected, and if rejected, shall be immediately removed from the jobsite. Joints shall be staggered on multilayer insulation. Mineral fiber thermal insulating cement shall be mixed with demineralized water when used on stainless steel surfaces. All insulation, jacketing and accessories shall be installed in accordance with MICA-01 standard plates except where modified herein or on the drawings.

3.1.2 Fire Seal

Where pipes and ducts pass through fire walls, fire partitions, fire rated pipe chase walls or floors above grade, a fire seal shall be provided as specified in SECTION: 07270 - FIRESTOPPING. Insulation and coverings for pipes and ducts which pass through the fire barrier shall be capable of maintaining the fire resistance of the fire barrier.

3.1.3 Painting and Finishing

Painting shall be as specified in SECTION: 09900 - PAINTING, GENERAL.

3.1.4 Flexible Cellular Insulation

Flexible cellular insulation shall be installed with seams and joints sealed with a contact adhesive. Flexible cellular insulation shall not be used on surfaces greater than 200 degrees F. Insulation exposed to weather and not shown to have jacketing shall be protected with two coats of UV resistant finish as recommended by the manufacturer after the adhesive is dry.

3.1.5 Welding

No welding shall be done on piping, duct or equipment without written approval of the Contracting Officer. The capacitor discharge welding process may be used for securing metal fasteners to duct.

3.2 PIPE INSULATION INSTALLATION

3.2.1 Pipe Insulation

3.2.1.1 General

Pipe insulation shall be continuous and installed on all fittings and appurtenances unless specified otherwise. Installation shall be with full length units of insulation and using a single cut piece to complete a run. Cut pieces or scraps abutting each other shall not be used. Pipe insulation shall be omitted on the following:

a. Pipe used solely for fire protection.

b. Chromium plated pipe to plumbing fixtures. However, fixtures for use by the physically handicapped shall have the hot water supply and drain, including the trap, insulated where exposed.

d. Sanitary drain lines, except those which receive condensate shall be insulated a minimum of 15 feet from point of connection to condensate line.

e. Sanitary drain lines.

f. Water hammer arrestors.

3.2.1.2 Pipes Passing Through Sleeves

a. Pipe insulation shall be continuous through the sleeve except at firewall penetrations.

b. An aluminum jacket with factory applied moisture barrier shall be provided over the insulation wherever penetrations require sealing.

c. Where penetrating interior walls, the aluminum jacket shall extend 2 inches beyond either side of the wall and shall be secured on each end with a band.

3.2.1.3 Pipes Passing Through Hangers

a. Insulation, whether hot or cold application, shall be continuous through hangers. All horizontal pipes 2 inches and smaller shall be supported on hangers with the addition of a Type 40 protection shield to protect insulation in accordance with MSS SP-69 without the use of high density insulation insert.

3.2.1.4 Flexible Cellular Pipe Insulation

Flexible cellular pipe insulation shall be tubular form for pipe sizes 5 inches and less. Sweat fittings shall be insulated with miter-cut pieces the same size as on adjacent piping. Screwed fittings shall be insulated with sleeved fitting covers fabricated from miter-cut pieces and shall be overlapped and sealed to the adjacent pipe insulation.

3.2.2 Aboveground Cold Pipelines (Minus 30 degrees to Plus 60 degrees F)

The following shall be included:

a. Domestic cold and chilled drinking water.

3.2.3 Insulation Thickness

Thickness of insulation shall be as indicated in TABLE I.

TABLE I
Pipe Size (Inches)

Service or Range of Temp (degrees F)	Run-outs* 1/4 to 1-1/2	1/4 to 1-1/4	1-1/2 to 3	3-1/2 to 5	6 to 10	11 to 24	25 to 33
60 to 35 (FC)	1/2	1	1				
(CG)		1-1/2	1-1/2	2	2	2	2
(MF)		1	1	1-1/2	1-1/2	1-1/2	1-1/2
34 to 0 (CG)		2-1/2	2-1/2	2-1/2	3	3	3-1/2
(MF)		1-1/2	1-1/2	2	2	2-1/2	2-1/2
-1 to -30 (CG)		3	3	3	3-1/2	3-1/2	4
(MF)		1-1/2	2	2-1/2	2-1/2	3	3
Domestic (FC)		1/2	1/2	1/2			
Cold Water (CG)		1	1	1	1-1/2	1-1/2	1-1/2
and Interior (MF)		1/2	1/2	1/2	1	1	1
Roof Drain Lines (Horizontal portions only)							

NOTES: CG - Cellular Glass
MF - Mineral Fiber
FC - Flexible Cellular

*When runouts to terminal units exceed 12 feet, the entire length of runout shall be insulated like the main feed pipe.

3.2.3.1 Jacket for Fibrous and Cellular Glass Insulated Pipe

Insulation shall be covered with a factory applied vapor barrier jacket or field applied seal welded PVC jacket. Insulation inside the building shown to be protected with an aluminum jacket shall have the insulation and vapor barrier jacket installed as specified herein. The aluminum jacket shall be installed as specified for piping exposed to weather, except sealing of the laps of the aluminum jacket is not required.

3.2.3.2 Insulation for Straight Runs (Fibrous and Cellular Glass)

a. Insulation shall be applied to the pipe with joints tightly butted. The ends of fibrous insulation shall be sealed off with vapor barrier coating at intervals not to exceed 15 feet.

b. Longitudinal laps of the jacket material shall overlap not less than 1-1/2 inches. Butt strips 3-inches wide shall be provided for circumferential joints.

c. Laps and butt strips shall be secured with adhesive and stapled on 4-inch centers if not factory self-sealing.

d. Factory self-sealing lap systems may be used when the ambient temperature is between 40 degrees and 120 degrees F during installation. The

lap system shall be installed in accordance with manufacturer's recommendations. Stapler shall be used only if specifically recommended by the manufacturer. Where gaps occur, the section shall be replaced or the gap repaired by applying adhesive under the lap and then stapling.

e. Staples and seams, including those on self-sealing lap systems with adhesive on one side shall be coated with a vapor barrier coating. Double pressure-sensitive adhesive seams need not be coated.

f. Breaks and punctures in the jacket material shall be patched by wrapping a strip of jacket material around the pipe and securing it with adhesive, stapling, and coated with vapor barrier coating. The patch shall extend not less than 1-1/2 inches past the break.

g. At penetrations such as thermometers, the voids in the insulation shall be filled and sealed with vapor barrier coating.

3.2.3.3 Insulation for Fittings and Accessories

a. Pipe insulation shall have ends thoroughly coated with a vapor barrier coating not more than 6 inches from each flange, union, valve, anchor, or fitting in all directions.

b. Insulation may be premolded or segmented. Insulation of the same thickness and conductivity as the adjoining pipe insulation shall be used. If nesting size insulation is used, the insulation should be overlapped 2 inches or one pipe diameter. Loose fill mineral fiber or insulating cement shall be used to fill the voids. Insulation for elbows less than 3-inch size shall be premolded. Insulation for elbows 3-inch size and larger shall be either premolded or segmented. Elbows insulated using segments shall not have less than 3 segments per elbow. Insulation may be secured by wire or tape until finish is applied.

c. Upon completion of installation of insulation on flanges, unions, valves, strainers, anchors, fittings and accessories, all terminations and all insulation not protected by factory vapor barrier jackets or PVC fitting covers shall be protected with two coats of vapor barrier coating with a minimum total thickness of 1/16th-inch, applied with glass tape embedded between coats. Tape seams shall overlap 1-inch. The coating shall extend out onto the adjoining pipe insulation 2 inches.

d. Anchors attached directly to the pipe shall be insulated for a sufficient distance to prevent condensation but not less than 6 inches from the insulation surface.

e. Flexible connections at pumps and other equipment shall be insulated with 1/2-inch flexible cellular insulation, unless otherwise indicated.

f. Insulation shall be marked showing the location of all unions, strainers and check valves.

3.2.3.4 Optional PVC Fitting Covers

At the option of the Contractor, premolded, one or two piece PVC fitting covers may be used in lieu of the vapor barrier and embedded glass tape. Factory premolded insulation segments shall be used under the fitting covers for elbows. Insulation segments shall be the same thickness as adjoining pipe insulation and the insulation shall be protected with one coat of vapor barrier coating under the PVC cover. The covers shall be secured by PVC vapor barrier tape, adhesive, seal-welding or with tacks made for securing PVC covers. All seams in the cover, and tacks and laps to adjoining pipe insulation jacket, will be sealed with vapor barrier tape to ensure that the assembly has a continuous vapor seal. Factory or fieldcut blanket insulation shall not be used on pipe below 60 degrees F.

3.2.4 Aboveground Hot Pipelines (Above 60 degrees F)

The following shall be included:

a. Domestic hot water.

3.2.4.1 Insulation Thickness

Insulation thickness for pipelines handling 60 degrees F to 200 degrees F domestic hot water shall be as indicated in TABLE IV.

TABLE IV

REQUIRED THICKNESS (IN INCHES) OF PIPE INSULATION
FOR PIPES HANDLING DOMESTIC HOT WATER. MF - MINERAL FIBER
CG - CELLULAR GLASS FC - FLEXIBLE CELLULAR

Range of Service (degrees F)	Runouts* 1/4 to 1-1/2"	Pipe Size, Inches 2 or less	2-1/2 to 3	4	5 to 6	8	10	12
61 to 200 (MF)		1.0	1.5	1.5	1.5	1.5	1.5	1.5
(CG)		1.5	2.5	2.5	2.0	2.0	2.0	2.0
(FC)	1/2	1.0	1.5	1.5	1.5			

*When runouts to terminal units exceed 12 feet, the entire length of runout shall be insulated like the main feed pipe.

3.2.4.2 Jacket for Insulated Pipe

Insulation shall be covered with a factory applied Type II jacket or field applied aluminum where required or seal welded PVC.

3.2.4.3 Insulation for Straight Runs

a. Insulation shall be applied to the pipe with joints tightly butted.

b. Longitudinal laps of the jacket material shall overlap not less than 1-1/2 inches, and butt strips 3 inches wide shall be provided for circumferential joints.

c. Laps and butt strips shall be secured with adhesive and stapled on 4-inch centers if not factory self-sealing. Adhesive may be omitted where pipe is concealed.

d. Factory self-sealing lap systems may be used when the ambient temperature is between 40 degrees and 120 degrees F and shall be installed in accordance with manufacturer's instructions. Laps and butt strips shall be stapled whenever there is nonadhesion of the system. Where gaps occur, the section shall be replaced or the gap repaired by applying adhesive under the lap and then stapling.

e. Breaks and punctures in the jacket material shall be patched by wrapping a strip of jacket material around the pipe and be secured with adhesive and stapled on 4-inch centers if not factory self-sealing. Adhesive may be omitted where pipe is concealed. Patch shall extend not less than 1-1/2 inches past the break.

3.2.4.4 Insulation for Fittings and Accessories

a. The run of the line pipe insulation shall have the ends brought up to the item.

b. Insulation of the same thickness and conductivity as the adjoining pipe insulation, either premolded or segmented, shall be placed around the item abutting the adjoining pipe insulation, or if nesting size insulation is used, overlapping 2 inches or one pipe diameter. Loose fill mineral fiber or insulating cement shall be used to fill the voids. Insulation for elbows less than 3-inch size shall be premolded. Insulation for elbows 3-inch size and larger shall be either premolded or segmented. Elbows insulated using segments shall have not less than 3 segments per elbow. Insulation may be wired or taped on until finish is applied.

c. Upon completion of installation of insulation on flanges, unions, valves, strainers, anchors, fittings and accessories, all terminations and all insulation not protected by factory vapor barrier jackets or PVC fitting covers shall be protected with two coats of Class 1 adhesive applied with glass tape embedded between coats. Tape seams shall overlap 1-inch. Adhesive shall extend onto the adjoining insulation not less than 2 inches. The total dry film thickness shall be not less than 1/16-inch.

d. Insulation terminations shall be tapered to unions at a 45-degree angle.

e. At the option of the Contractor, factory premolded one- or two-piece PVC fitting covers may be used in lieu of the adhesive and embedded glass tape. Factory premolded segments or factory or field cut blanket insert insulation segments shall be used under the cover and shall be the same thickness as adjoining pipe insulation. The covers shall be secured by PVC vapor barrier tape, adhesive, seal-welding or with tacks made for securing PVC covers.

3.3 DUCT INSULATION INSTALLATION

Except for oven hood exhaust duct insulation, corner angles shall be installed on external corners of insulation on ductwork in exposed finished spaces before covering with jacket. Duct insulation shall be omitted on the following:

a. Factory fabricated double wall internally insulated duct.

3.3.1 Insulation and Vapor Barrier for Cold Air Duct (Below 60 degrees F)

Ducts and associated equipment shall be insulated to a thickness of 2 inches except relief ducts and fresh air intake ducts which shall be insulated 1-1/2 inches. The following shall be insulated:

a. Supply ducts.

b. Return air ducts.

Insulation for rectangular ducts shall be flexible type where concealed, minimum density 3/4 pcf and rigid type where exposed, minimum density 3 pcf. Insulation for all round ducts shall be flexible type, minimum density 3/4 pcf with a factory Type I jacket. Fibrous and cellular glass insulation for exposed ducts shall be provided with either a factory-applied Type I vapor barrier jacket or a vapor barrier coating finish as specified. Fibrous and cellular glass insulation on concealed duct shall be provided with a factory-applied Type I vapor barrier jacket. Vapor barrier coating finish where indicated to be used shall be accomplished by applying two coats of vapor barrier coating with a layer of glass cloth embedded between the coats. The total dry film thickness shall be approximately 1/16-inch. Duct insulation shall be continuous through sleeves and prepared openings except fire wall penetrations. Duct insulation terminating at fire dampers, shall be continuous over the damper collar and retaining angle of fire dampers, which are exposed to unconditioned air and which may be prone to condensate formation. Duct insulation and vapor barrier shall cover the collar and retaining angles of diffusers, registers and grilles. Vapor barrier materials shall be applied to form a complete unbroken vapor seal over the insulation.

3.3.1.1 Installation on Concealed Duct

a. For rectangular, oval or round ducts, insulation shall be attached by applying Class 2 adhesive around the entire perimeter of the duct in 6-inch wide strips on 12-inch centers.

b. For rectangular and oval ducts, 24 inches and larger insulation shall be additionally secured to bottom of ducts by the use of mechanical fasteners. Fasteners shall be spaced on 18-inch centers and not more than 18 inches from duct corners.

c. For rectangular, oval and round ducts, mechanical fasteners shall be provided on sides of duct risers for all duct sizes. Fasteners shall be spaced on 18-inch centers and not more than 18 inches from duct corners.

d. Insulation shall be impaled on the mechanical fasteners where used and shall be pressed thoroughly into the adhesive. Care shall be taken to ensure vapor barrier jacket joints overlap 2 inches. The insulation shall not be compressed to a thickness less than that specified. Insulation shall be carried over standing seams and trapeze-type duct hanger.

e. Self-locking washers shall be installed where mechanical fasteners are used. The pin shall be trimmed back and bent over.

f. Jacket overlaps shall be secured under the overlap with Class 2 adhesive and stapled on 4-inch centers. Staples and seams shall be coated with a brush coat of vapor barrier coating.

g. Breaks in the jacket material shall be covered with patches of the same material as the vapor barrier. The patches shall extend not less than 2 inches beyond the break or penetration in all directions and shall be secured with Class 2 adhesive and staples. Staples and joints shall be sealed with a brush coat of vapor barrier coating.

h. At jacket penetrations such as hangers thermometers and damper operating rods, voids in the insulation shall be filled and the penetration sealed with a brush coat of vapor barrier coating.

i. Insulation terminations and pin punctures shall be sealed and flashed with a reinforced vapor barrier coating finish. The coating shall overlap the adjoining insulation and uninsulated surface 2 inches. Pin puncture coatings shall extend 2 inches from the puncture in all directions.

j. Where insulation standoff brackets occur, insulation shall be extended under the bracket and the jacket terminated at the bracket.

3.3.2 Ducts Handling Air for Dual Purpose (Below and Above 60 degrees F)

Ducts shall be insulated as specified for cold air duct.

3.3.3 Duct Test Holes

After all duct systems have been tested, adjusted, and balanced, all breaks in the insulation and jacket shall be repaired in accordance with the applicable section of this specification for the type of duct insulation to be repaired.

3.3.4 Internally Lined Duct

Internally lined ductwork shall be used only where indicated on the drawings and shall be in accordance with the paragraph Acoustical Duct Lining, SECTION: AIR-CONDITIONING SYSTEM (UNITARY TYPE). The insulation liner thickness shall be thermally equivalent to that specified hereinbefore.

3.4 EQUIPMENT INSULATION INSTALLATION

3.4.1 General

Removable insulation sections shall be provided to cover parts of equipment which must be opened periodically for maintenance including vessel covers, fasteners, flanges and accessories.

3.4.2 Insulation for Cold Equipment (Below 60 degrees F)

Insulation shall be furnished on all equipment handling media below 60 degrees F including the following:

a. Air handling equipment parts that are not factory insulated.

3.4.2.1 Insulation Type

Insulation shall be suitable for the temperature encountered. Thicknesses shall be as follows:

a. Equipment Handling Media Between 35 degrees F and 60 degrees F: 1-1/2-inch thick mineral fiber, 2-inch thick cellular glass, or 1-1/2-inch thick flexible cellular.

3.4.3 Equipment Exposed to Weather

3.4.3.1 Installation

Equipment exposed to weather shall be insulated and finished in accordance with the requirements for ducts exposed to weather in paragraph DUCT INSULATION INSTALLATION.

3.4.3.2 Optional Panels

At the option of the Contractor, prefabricated metal insulation panels may be used in lieu of the insulation and finish previously specified. Thermal performance shall be equal to or better than that specified for field applied insulation. Panels shall be the standard catalog product of a manufacturer of metal insulation panels. Fastenings, flashing, and support system shall conform to published recommendations of the manufacturer for weatherproof installation that will prevent moisture from entering the insulation. Panels shall be designed to accommodate thermal expansion and to support a 250 pound walking load without permanent deformation or permanent damage to the insulation. Exterior metal cover sheet shall be aluminum and exposed fastenings shall be stainless steel or aluminum.

- - o 0 o - -

SECTION 15330

WET PIPE SPRINKLER SYSTEM, FIRE PROTECTION

PART 1 - GENERAL

1.1 REFERENCES

The publications listed below form a part of this specification to the extent referenced. The publications are referred to in the text by basic designation only.

AMERICAN SOCIETY FOR TESTING AND MATERIALS (ASTM)

ASTM A 47	(1990) Ferritic Malleable Iron Castings
ASTM A 53	(1993a) Pipe, Steel, Black and Hot-Dipped, Zinc-Coated Welded and Seamless
ASTM A 135	(1993) Electric-Resistance-Welded Steel Pipe
ASTM A 183	(1983; R 1990) Carbon Steel Tract Bolts and Nuts
ASTM A 536	(1984; R 1993) Ductile Iron Castings
ASTM A 795	(1993) Black and Hot-Dipped Zinc-Coated (Galvanized) Welded and Seamless Steel Pipe for Fire Protection Use
ASTM B 88	(1993a) Seamless Copper Water Tube
ASTM D 3309	(1993) Polybutylene (PB) Plastic Hot- and Cold-Water Distribution Systems
ASTM F 442	(1993) Chlorinated Poly(Vinyl Chloride) (CPVC) Plastic Pipe (SDR-PR)

AMERICAN SOCIETY OF MECHANICAL ENGINEERS (ASME)

ASME B16.1	(1989) Cast Iron Pipe Flanges and Flanged Fittings
ASME B16.3	(1992) Malleable Iron Threaded Fittings
ASME B16.4	(1992) Cast Iron Threaded Fittings
ASME B16.9	(1993) Factory-Made Wrought Steel Buttwelding Fittings
ASME B16.11	(1991) Forged Fittings, Socket-Welding and Threaded

ASME B16.18	(1984) Cast Copper Alloy Solder Joint Pressure Fittings
ASME B16.21	(1992) Nonmetallic Flat Gaskets for Pipe Flanges
ASME B16.22	(1989) Wrought Copper and Copper Alloy Solder Joint Pressure Fittings
ASME B18.2.1	(1981; Supple 1991; R 1992) Square and Hex Bolts and Screws (Inch Series)
ASME B18.2.2	(1987; R 1993) Square and Hex Nuts (Inch Series)

AMERICAN SOCIETY OF SANITARY ENGINEERING (ASSE)

ASSE 1015	(1993) Double Check Backflow Prevention Assembly

AMERICAN WATER WORKS ASSOCIATION (AWWA)

AWWA-01	(1992) Standard Methods for the Examination of Water and Wastewater
AWWA B300	(1992) Hypochlorites
AWWA B301	(1992) Liquid Chlorine
AWWA C104	(1990) Cement-Mortar Lining for Ductile-Iron Pipe and Fittings for Water
AWWA C110	(1993) Ductile-Iron and Gray-Iron Fittings, 3 In. through 48 In. (75 mm through 1200 mm), for Water and Other Liquids
AWWA C111	(1990) Rubber-Gasket Joints for Ductile-Iron Pressure Pipe and Fittings
AWWA C151	(1991) Ductile-Iron Pipe, Centrifugally Cast, for Water or Other Liquids
AWWA C203	(1991) Coal-tar Protective Coatings and Linings for Steel Water Pipelines - Enamel and Tape - Hot-Applied
AWWA M20	(1973) Manual: Water Chlorination Principles and Practices

FACTORY MUTUAL ENGINEERING AND RESEARCH (FM)

FM P7825	(1997) Approval Guide

MANUFACTURERS STANDARDIZATION SOCIETY OF THE VALVE AND FITTINGS INDUSTRY (MSS)

MSS SP-71	(1990) Cast Iron Swing Check Valves, Flanges and Threaded Ends

NATIONAL FIRE PROTECTION ASSOCIATION (NFPA)

NFPA 13	(1996) Installation of Sprinkler Systems
NFPA 24	(1995) Installation of Private Fire Service Mains and Their Appurtenances

NATIONAL INSTITUE FOR CERTIFICATION IN ENGINEERING TECHNOLOGIES (NICET)

NICET 1014	(1992) Detail Manual for Certification in the Field of Fire Protection Engineering Technology (Field 003) Automatic Sprinkler System Layout

UNDERWRITERS LABORATORIES (UL)

UL-01	(1998) Building Materials Directory
UL-04	(1998) Fire Protection Equipment Directory
UL 668	(1989) Hose Valves For Fire Protection Service

1.2 GENERAL REQUIREMENTS

Wet pipe sprinkler system shall be provided in all areas as indicated on the drawings. The sprinkler system shall provide fire sprinkler protection for the entire area. Except as modified herein, the system shall be designed and installed in accordance with NFPA 13.

1.2.1 Basis for Calculations

The system shall be designed per the Pipe Schedule Method as prescribed in NFPA 13.**1.2.2 Sprinkler Spacing**

Spacing of sprinklers shall not exceed limits specified per the Pipe Schedule Method of NFPA 13 for the respective hazard classification.

1.3 SUBMITTALS

Government approval is required for submittals with a "GA" designation; submittals having an "FIO" designation are for information only. Submittals related to system configuration, hydraulic calculations, and equipment selection, including manufacturer's catalog data, working drawings, connection drawings, control diagrams and certificates shall be submitted concurrently as a complete package. The package will be reviewed by the U.S. Army Engineer District Fire Protection Engineer. The following shall be submitted in accordance with Section 01330 SUBMITTAL PROCEDURES:

SD-01 Data

Sprinkler System Equipment; GA.

Manufacturer's Catalog Data for each separate piece of equipment proposed for use in the system. Data shall indicate the name of the manufacturer of each item of equipment, with data highlighted to indicate model, size, options,

etc. proposed for installation. In addition, a complete equipment list which includes equipment description, model number and quantity shall be provided.

SD-04 Drawings

Sprinkler System Shop Drawings; GA.

Detail drawings conforming to the requirements established for working plans as prescribed in NFPA 13. Drawings shall include plan and elevation views which establish that the equipment will fit the allotted spaces with clearance for installation and maintenance. Each set of drawings shall include the following:

a. Descriptive index of drawings in the submittal with drawings listed in sequence by drawing number. A legend identifying device symbols, nomenclature, and conventions used.

b. Floor plans drawn to a scale not less than 1/8" = 1'-0" which clearly show locations of sprinklers, risers, pipe hangers, seismic separation assemblies, sway bracing, inspector's test connections, drains, and other applicable details necessary to clearly describe the proposed arrangement. Each type of fitting used and the locations of bushings, reducing couplings, and welded joints shall be indicated.

c. Actual center-to-center dimensions between sprinklers on branch lines and between branch lines; from end sprinklers to adjacent walls; from walls to branch lines; from sprinkler feed mains, cross-mains and branch lines to finished floor and roof or ceiling. A detail shall show the dimension from the sprinkler and sprinkler deflector to the ceiling in finished areas.

d. Longitudinal and transverse building sections showing typical branch line and cross-main pipe routing as well as elevation of each typical sprinkler above finished floor.

e. Details of each type of riser assembly; pipe hanger; sway bracing for earthquake protection, and restraint of underground water main at point-of-entry into the building, and electrical devices and interconnecting wiring.

As-Built Drawings; FIO.

As-built drawings, no later than 14 working days after completion of the Final Tests. The sprinkler system shop drawings shall be updated to reflect as-built conditions after work is completed and shall be on reproducible full-size mylar film.

SD-07 Schedules

Preliminary Tests; GA.

A schedule of preliminary tests, at least 3 days prior to the proposed start of the tests.

Final Test; GA.

Upon successful completion of tests specified under PRELIMINARY TESTS, written notification shall be given to the Contracting Officer of the date for the final acceptance test. Notification shall be provided at least 3 days prior to the proposed start of the test. Notification shall include a copy of the Contractor's Material & Test Certificates.

SD-08 Statements

Installer Qualifications; GA.

Qualifications of the sprinkler installer.

Submittal Preparer's Qualifications; GA.

The name and documentation of certification of the individual who will prepare the submittals, prior to the submittal of the drawings and hydraulic calculations.

SD-13 Certificates

Contractor's Material & Test Certificates; FI0.

Certificates, as specified in NFPA 13, shall be completed and signed by the Contractor's Representative performing required tests for both underground and aboveground piping.

1.4 SUBMITTAL PREPARER'S QUALIFICATIONS

The sprinkler system submittals, including as-built drawings, shall be prepared by an individual who is either a registered professional engineer or who is certified as a Level III or IV Technician by National Institute for Certification in Engineering Technologies (NICET) in the Automatic Sprinkler System Layout subfield of Fire Protection Engineering Technology in accordance with NICET 1014.

1.5 INSTALLER QUALIFICATIONS

The installer shall be experienced and regularly engaged in the installation of the type and complexity of system included in this project. A statement prior to submittal of any other data or drawings, that the proposed sprinkler system installer is regularly engaged in the installation of the type and complexity of system included in this project shall be provided. In addition, data identifying the location of at least three systems recently installed by the proposed installer which are comparable to the system specified shall be submitted. Contractor shall certify that each system has performed satisfactorily, in the manner intended, for a period of not less than 6 months.

1.6 REGULATORY REQUIREMENTS

Compliance with referenced NFPA standards is mandatory. This includes advisory provisions listed in the appendices of such standards, as though the word "shall" had been substituted for the word "should" wherever it appears. Applicable material and installation standards referenced in Appendix A of

NFPA 13 and NFPA 24 shall be considered mandatory the same as if such referenced standards were specifically listed in this specification. In the event of a conflict between specific provisions of this specification and applicable NFPA standards, this specification shall govern. All requirements that exceed the minimum requirements of NFPA 13 shall be incorporated into the design. Reference to "authority having jurisdiction" shall be interpreted to mean the Contracting Officer.

1.7 DELIVERY AND STORAGE

Equipment placed in storage shall be stored with protection from the weather, humidity and temperature variations, dirt and dust or other contaminants.

PART 2 - PRODUCTS

2.1 GENERAL EQUIPMENT REQUIREMENTS

2.1.1 Standard Products

Materials and equipment shall be standard products of a manufacturer regularly engaged in the manufacture of such products and shall essentially duplicate items that have been in satisfactory use for at least 2 years prior to bid opening.

2.1.2 Requirements for Fire Protection Service

Equipment and materials shall have been tested by Underwriters Laboratories, Inc. and listed in UL-04 or approved by Factory Mutual and listed in FM P7825. Where the terms "listed" or "approved" appear in this specification, such shall mean listed in UL-04 or FM P7825.

2.1.3 Nameplates

Major components of equipment shall have the manufacturer's name, address, type or style, model or serial number, and catalog number on a plate permanently affixed to the item of equipment.

2.2 ABOVEGROUND PIPING SYSTEMS

Aboveground piping shall be steel

2.2.1 Steel Piping System

2.2.1.1 Steel Pipe

Except as modified herein, steel pipe shall be black as permitted by NFPA 13 and shall conform to applicable provisions of ASTM A 795, ASTM A 53, or ASTM A 135. Pipe in which threads or grooves are cut shall be Schedule 40. Pipe shall be marked with the name of the manufacturer, kind of pipe, and ASTM designation.

2.2.1.2 Fittings for Non-Grooved Steel Pipe

Fittings shall be cast iron conforming to ASME B16.4, steel conforming to ASME B16.9 or ASME B16.11, or malleable iron conforming to ASME B16.3. Steel press fittings shall be approved for fire protection systems. Fittings into which sprinklers, drop nipples or riser nipples (sprigs) are screwed shall be threaded type. Plain-end fittings with mechanical couplings, fittings which use steel gripping devices to bite into the pipe and segmented welded fittings shall not be used.

2.2.1.3 Grooved Mechanical Joints and Fittings

Joints and fittings shall be designed for not less than 175 psi service and shall be the product of the same manufacturer. Fitting and coupling houses shall be malleable iron conforming to ASTM A 47, Grade 32510; ductile iron conforming to ASTM A 536, Grade 65-45-12. Gasket shall be the flush type that fills the entire cavity between the fitting and the pipe. Nuts and bolts shall be heat-treated steel conforming to ASTM A 183 and shall be cadmium plated or zinc electroplated.

2.2.1.4 Flanges

Flanges shall conform to NFPA 13 and ASME B16.1. Gaskets shall be non-asbestos compressed material in accordance with ASME B16.21, 1/16 inch thick, and full face or self-centering flat ring type. Bolts shall be squarehead conforming to ASME B18.2.1 and nuts shall be hexagon type conforming to ASME B18.2.2.

2.2.2 Pipe Hangers

Hangers shall be listed in UL-04 or FM P7825 and of the type suitable for the application, construction, and pipe type and sized involved.

2.2.3 Valves

2.2.3.1 Control Valve and Gate Valve

Manually operated sprinkler control valve and gate valve shall be outside stem and yoke (OS&Y) type and shall be listed in UL-01 or FM P7825.

2.2.3.2 Check Valve

Check valve 2 inches and larger shall be listed in UL-04 or FM P7825. Check valves 4 inches and larger shall be of the swing type with flanged cast iron body and flanged inspection plates, shall have a clear waterway and shall meet the requirements of MSS SP-71, for Type 3 or 4.

2.3 RISER CHECK VALVE ASSEMBLY

Assembly shall include an approved check valve, plus trim kit that includes the necessary fittings, nipples, and valves to trim the check valve with two pressure gauges and a main drain.

2.4 ALARM INITIATING AND SUPERVISORY DEVICES

2.4.1 Sprinkler Waterflow Indicator Switch, Vane Type

Switch shall be vane type with a pipe saddle and cast aluminum housing. The electro-mechanical device shall include a flexible, low-density polyethylene paddle conforming to the inside diameter of the fire protection pipe. The device shall sense water movements and be capable of detecting a sustained flow of 10 gpm or greater. The device shall contain a retard device adjustable from 0 to 90 seconds to reduce the possibility of false alarms caused by transient flow surges. The switch shall include two SPDT (Form C) contacts, and shall be equipped with a silicone rubber gasket to assure positive water seal and a dustproof cover and gasket to seal the mechanism from dirt and moisture.

2.4.2 Valve Supervisory (Tamper) Switch

Switch shall be suitable for mounting to the type of control valve to be supervised open. The switch shall be tamper resistant and contain one set of SPDT (Form C) contacts arranged to transfer upon removal of the housing cover or closure of the valve of more than two rotations of the valve stem.

2.5 FIRE DEPARTMENT CONNECTION

Fire department connection shall be projecting or flush type with cast brass body, matching wall escutcheon lettered "Auto Spkr" with a polished brass finish. The connection shall have two inlets with individual self-closing clappers, caps with drip drains and chains. Female inlets shall have 2-1/2 inch diameter American National Fire Hose Connection Screw Threads (NH) per NFPA 1963.

2.6 SPRINKLERS

Sprinklers shall be used in accordance with their listed spacing limitations. Temperature classification shall be ordinary or as otherwise required. Sprinklers in high heat areas including attic spaces or in close proximity to unit heaters shall have temperature classification in accordance with NFPA 13.

2.6.1 Upright Sprinkler

Upright sprinkler shall be brass quick-response type and shall have a nominal 12.7 mm (1/2 inch) or 13.5 mm (17/32 inch) orifice.

2.6.2 Pendent Sprinkler

Pendent sprinkler shall be of the fusible strut or glass bulb type, recessed or concealed, quick-response type with nominal 12.7 mm (1/2 inch) or 13.5 mm (17/32 inch) orifice. Pendent sprinklers shall have a polished chrome or white enamel finish.

2.6.3 Institutional Pendent Sprinkler

Institutional type pendent sprinkler shall be of the fusible strut or glass bulb type, quick-response type with nominal 12.7 mm (1/2 inch) or 13.5 mm (17/32 inch) orifice. Sprinkler shall be specifically designed for use in correctional and mental facilities.

2.7 DISINFECTING MATERIALS

2.7.1 Liquid Chlorine

Liquid chlorine shall conform to AWWA B301.

2.7.2 Hypochlorites

Calcium hypochlorite and sodium hypochlorite shall conform to AWWA B300.

2.8 ACCESSORIES

2.8.1 Sprinkler Cabinet

Spare sprinklers shall be provided in accordance with NFPA 13 and shall be packed in a suitable metal or plastic cabinet. Spare sprinklers shall be representative of, and in proportion to, the number of each type and temperature rating of the sprinklers installed. At least one wrench of each type required shall be provided.

2.8.2 Pendent Sprinkler Escutcheon

Escutcheon shall be one-piece metallic type and suitable for installation on recessed pendent sprinklers or institutional type pendent sprinklers. The escutcheon shall have a factory finish that matches the pendent sprinkler heads.

2.8.3 Pipe Escutcheon

Escutcheon shall be polished chromium-plated zinc alloy, or polished chromium-plated copper alloy. Escutcheons shall be either one-piece or split-pattern, held in place by internal spring tension or set screw.

2.8.4 Identification Sign

Valve identification sign shall be red letters on a white background or white letters on red background. Wording of sign shall include, but not be limited to "main drain," "auxiliary drain," "inspector's test," "alarm test," "alarm line," and similar wording as required to identify operational components.

PART 3 - EXECUTION

3.1 INSTALLATION REQUIREMENTS

The installation shall be in accordance with the applicable provisions of NFPA 13, NFPA 24 and publications referenced therein.

3.2 ABOVEGROUND PIPING INSTALLATION

Piping shall be run straight and bear evenly on hangers and supports.

3.2.1 Protection of Piping Against Earthquake Damage

The system piping shall be protected against damage from earthquakes. Seismic protection of the piping system shall be provided in accordance with NFPA 13 and Appendix A. Seismic protection shall include flexible couplings, sway bracing, seismic separation assemblies where piping crosses building seismic separation joints, and other features as required in NFPA 13 for protection of piping against damage from earthquakes. Branch lines shall be equipped with sway braces at the end sprinkler head and at intervals not exceeding 40 ft.

3.2.2 Piping in Exposed Areas

Exposed piping shall be installed so as not to diminish exit access widths, corridors or equipment access. Exposed horizontal piping, including drain piping, shall be installed to provide maximum headroom.

3.2.3 Piping in Finished Areas

In areas with suspended or dropped ceilings and in areas with concealed spaces above the ceiling, piping shall be concealed above ceilings. Piping shall be inspected, tested and approved before being concealed.

3.2.4 Pendent Sprinklers

Drop nipples to pendent sprinklers shall consist of minimum 1 inch pipe with a reducing coupling into which the sprinkler shall be threaded. Hangers shall be provided on arm-overs to drop nipples supplying pendent sprinklers when the arm-over exceeds 12 inches. Where sprinklers are installed below suspended or dropped ceilings, drop nipples shall be cut such that sprinkler ceiling plates or escutcheons are of a uniform depth throughout the finished space.

3.2.4.1 Pendent Sprinkler Locations

Pendent sprinklers in suspended ceilings shall be a minimum of 6 inches from ceiling grid.

3.2.5 Pipe Joints

Pipe joints shall conform to NFPA 13, except as modified herein. Not more than four threads shall show after joint is made up. Welded joints will be permitted, only if welding operations are performed as required by NFPA 13 at the Contractor's fabrication shop, not at the project construction site. Flanged joints shall be provided where indicated or required by NFPA 13. Grooved pipe and fittings shall be prepared in accordance with the manufacturer's latest published specification according to pipe material, wall thickness and size. Grooved couplings and fittings shall be from the same manufacturer.

3.2.6 Reducers

Reductions in pipe sizes shall be made with one-piece tapered reducing fittings. The use of grooved-end or rubber-gasketed reducing couplings will not be permitted. When standard fittings of the required size are not manufactured, single bushings of the face type will be permitted. Where used, face bushings shall be installed with the outer face flush with the face of the fitting opening being reduced. Bushings shall not be used in elbow fittings, in more than one outlet of a tee, in more than two outlets of a cross, or where the reduction in size is less than 1/2 inch.

3.2.7 Pipe Penetrations

Cutting structural members for passage of pipes or for pipe-hanger fastenings will not be permitted. Pipes that must penetrate concrete or masonry walls or concrete floors shall be core-drilled and provided with pipe sleeves. Each sleeve shall be Schedule 40 galvanized steel, ductile iron or cast iron pipe and shall extend through its respective wall or floor and be cut flush with each wall surface. Sleeves shall provide required clearance between the pipe and the sleeve per NFPA 13. The space between the sleeve and the pipe shall be firmly packed with mineral wool insulation. Where pipes pass through fire walls, fire partitions, or floors, a fire seal shall be placed between the pipe and sleeve in accordance with Section 07270 - FIRESTOPPING. In penetrations which are not fire-rated or not a floor penetration, the space between the sleeve and the pipe shall be sealed at both ends with plastic waterproof cement which will dry to a firm but pliable mass or with a mechanically adjustable segmented elastomer seal.

3.2.8 Escutcheons

Escutcheons shall be provided for pipe penetration of ceilings and walls. Escutcheons shall be securely fastened to the pipe at surfaces through which piping passes.

3.2.9 Inspector's Test Connection

Test connection shall consist of 1 inch pipe connected adjacent to the system riser; a test valve located approximately 7 feet above the floor; a smooth bore brass outlet equivalent to the smallest orifice sprinkler used in the system; and a painted metal identification sign affixed to the valve with the words "Inspector's Test." The discharge orifice shall be located outside the building wall directed so as not to cause damage to adjacent construction or landscaping during full flow discharge. A splash block shall be provided.

3.2.10 Drains

Main drain piping shall be provided to discharge at the location indicated. Auxiliary drains shall be provided as required by NFPA 13 except that drain valves shall be used where drain plugs are otherwise permitted. Where branch lines terminate at low points and form trapped sections, such branch lines shall be manifolded to a common drain line.

3.2.11 Installation of Fire Department Connection

Connection shall be mounted 3 feet above finished grade. The piping between the connection and the check valve shall be provided with an automatic drip in accordance with NFPA 13 and arranged to drain to the outside.

3.2.12 Identification Signs

Signs shall be affixed to each control valve, inspector test valve, main drain, auxiliary drain, test valve, and similar valves as appropriate or as required by NFPA 13. Hydraulic design data nameplates shall be permanently affixed to each sprinkler riser as specified in NFPA 13.

3.3 FIELD PAINTING AND FINISHING

Field painting and finishing are specified in Section 09900 PAINTING, GENERAL. All exposed piping shall be painted to match the color of the wall finish.

3.4 PRELIMINARY TESTS

The system, including the underground water mains, and the aboveground piping and system components, shall be tested to assure that equipment and components function as intended. The underground and aboveground interior piping systems and attached appurtenances subjected to system working pressure shall be tested in accordance with NFPA 13. Upon completion of specified tests, the Contractor shall complete certificates as specified in paragraph SUBMITTALS.

3.4.1 Aboveground Piping

3.4.1.1 Hydrostatic Testing

Aboveground piping shall be hydrostatically tested in accordance with NFPA 13 at not less than 200 psi or 50 psi in excess of maximum system operating pressure and shall maintain that pressure without loss for 2 hours. There shall be no drop in gauge pressure or visible leakage when the system is subjected to the hydrostatic test. The test pressure shall be read from a gauge located at the low elevation point of the system or portion being tested.

3.4.2 Testing of Alarm Devices

Each alarm switch shall be tested by flowing water through the inspector's test connection. Each water-operated alarm devices shall be tested to verify proper operation.

3.5 FINAL ACCEPTANCE TEST

A technician employed by the installing Contractor shall be present for the final tests and shall provide a complete demonstration of the operation of the system. This shall include operation of control valves and flowing of inspector's test connections to verify operation of associated waterflow alarm switches. After operation of control valves has been completed, the main drain test shall be repeated to assure that control valves are in the open position. In addition, the representative shall have available copies of

as-built drawings and certificates of tests previously conducted. The installation shall not be considered accepted until identified discrepancies have been corrected and test documentation is properly completed and received.

- - o 0 o - -

SECTION 15400

PLUMBING, GENERAL PURPOSE

PART 1 - GENERAL

1.1 REFERENCES

The publications listed below form a part of this specification to the extent referenced. The publications are referred to in the text by basic designation only.

AIR CONDITIONING AND REFRIGERATION INSTITUTE (ARI)

ARI 1010	(1994) Drinking-Fountains and Self-Contained, Mechanically-Refrigerated Drinking-Water Coolers

AMERICAN NATIONAL STANDARDS INSTITUTE (ANSI)

ANSI Z21.22	(1986; Z21.22a) Relief Valves and Automatic Gas Shutoff Devices for Hot Water Supply Systems

AMERICAN SOCIETY FOR TESTING AND MATERIALS (ASTM)

ASTM A 105	(1994) Forgings, Carbon Steel, for Piping Components
ASTM A 193	(1994b) Alloy-Steel and Stainless Steel Bolting Materials for High-Temperature Service
ASTM A 515	(1992) Pressure Vessel Plates, Carbon Steel, for Intermediate- and Higher-Temperature Service
ASTM A 516	(1990) Pressure Vessel Plates, Carbon Steel, for Moderate- and Lower-Temperature Service
ASTM B 32	(1993) Solder Metal
ASTM B 42	(1993) Seamless Copper Pipe, Standard Sizes
ASTM B 88	(1993a) Seamless Copper Water Tube
ASTM B 370	(1992) Copper Sheet and Strip for Building Construction
ASTM B 641	(1993) Seamless and Welded Copper Distribution Tube (Type D)
ASTM B 813	(1993) Liquid and Paste Fluxes for Soldering Applications of Copper and Copper Alloy Tube
ASTM C 564	(1993) Rubber Gaskets for Cast Iron Soil Pipe and Fittings

ASTM C 920	(1987) Elastomeric Joint Sealants
ASTM D 638	(1994b) Tensile Properties of Plastics
ASTM D 1004	(1994a) Initial Tear Resistance of Plastic Film and Sheeting
ASTM D 1248	(1984; R 1989) Polyethylene Plastics Molding and Extrusion Materials
ASTM D 2564	(1993) Solvent Cements for Poly(Vinyl Chloride) (PVC) Plastic Piping Systems
ASTM D 2665	(1994) Poly(Vinyl Chloride) (PVC) Plastic Drain, Waste, and Vent Pipe and Fittings
ASTM D 2683	(1993) Socket-Type Polyethylene Fittings for Outside Diameter-Controlled Polyethylene Pipe and Tubing
ASTM D 2822	(1991) Asphalt Roof Cement
ASTM D 2855	(1993) Making Solvent-Cemented Joints with Poly(Vinyl Chloride) (PVC) Pipe and Fittings
ASTM D 3308	(REV A-91) Standard Specifications for PTFE Resin Skived Tape.
ASTM D 3311	(1992) Drain, Waste, and Vent (DWV) Plastic Fittings Patterns
ASTM E 96	(1994) Water Vapor Transmission of Materials
ASTM F 409	(1993) Thermoplastic Accessible and Replaceable Plastic Tube and Tubular Fittings
ASTM F 493	(1993a) Solvent Cements for Chlorinated Poly(Vinyl Chloride) (CPVC) Plastic Pipe and Fittings
ASTM F 891	(1993a) Coextruded Poly(Vinyl Chloride) (PVC) Plastic Pipe with a Cellular Core

AMERICAN SOCIETY OF MECHANICAL ENGINEERS (ASME)

ASME A112.1.2	(1991) Air Gaps in Plumbing Systems
ASME A112.6.1M	(1988) Supports for Off-the-Floor Plumbing Fixtures for Public Use
ASME A112.18.1M	(1994; Errata Feb 1995) Plumbing Fixture Fittings
ASME A112.19.2M	(1990) Vitreous China Plumbing Fixtures
ASME A112.21.1M	(1991) Floor Drains

ASME A112.36.2M	(1991) Cleanouts
ASME B1.20.1	(1983; R 1992) Pipe Threads, General Purpose (Inch)
ASME B16.5	(1988; Errata Oct 88; B16.5a) Pipe Flanges and Flanged Fittings
ASME B16.15	(1985) Cast Bronze Threaded Fittings Classes 125 and 250
ASME B16.18	(1984) Cast Copper Alloy Solder Joint Pressure Fittings
ASME B16.22	(1989) Wrought Copper and Copper Alloy Solder Joint Pressure Fittings
ASME B31.1	(1992; B31.1a; B31.1b; B31.1c) Power Piping
ASME B31.5	(1992; B31.5a) Refrigeration Piping
ASME B40.1	(1991) Gauges - Pressure Indicating Dial Type - Elastic Element
ASME BPV IX	(1992; Addenda Dec 1992, Dec 1993, Dec 1994) Boiler and Pressure Vessel Code; Section IX, Welding and Brazing Qualifications
ASME CSD-1	(1992; CSD-1a; CSD-1b) Controls and Safety Devices for Automatically Fired Boilers

AMERICAN SOCIETY OF SANITARY ENGINEERING (ASSE)

ASSE 1001	(1990) Pipe Applied Atmospheric Type Vacuum Breakers
ASSE 1003	(1981) Water Pressure Reducing Valves for Domestic Water Supply Systems
ASSE 1005	(1993) Water Heater Drain Valves - 3/4-Inch Iron Pipe Size
ASSE 1011	(1993) Hose Connection Vacuum Breakers
ASSE 1012	(1993) Backflow Preventers with Intermediate Atmospheric Vent
ASSE 1013	(1993) Reduced Pressure Principle Backflow Preventers
ASSE 1018	(1986) Trap Seal Primer Valves Water Supply Fed
ASSE 1037	(1990) Pressurized Flushing Devices (Flushometers) for Plumbing Fixtures/F

AMERICAN WATER WORKS ASSOCIATION (AWWA)

AWWA-01	(1992) Standard Methods for the Examination of Water and Wastewater
AWWA B300	(1992) Hypochlorites
AWWA B301	(1992) Liquid Chlorine
AWWA M20	(1973) Manual: Water Chlorination Principles and Practices

AMERICAN WELDING SOCIETY (AWS)

AWS A5.8	(1992) Filler Metals for Brazing and Braze Welding
AWS B2.2	(1991) Brazing Procedure and Performance Qualification

CODE OF FEDERAL REGULATIONS (CFR)

10 CFR 430	Energy Conservation Program for Consumer Products

COMMERCIAL ITEM DESCRIPTIONS (CID)

CID A-A-238	(Rev B) Seat, Water Closet
CID A-A-240	(Basic) Shower Head, Ball Joint

COPPER DEVELOPMENT ASSOCIATION (CDA)

CDA 404/O-RR	(1992) Copper Tube for Plumbing, Heating, Air Conditioning and Refrigeration

COUNCIL OF AMERICAN BUILDING OFFICIALS (CABO)

CABO A117.1	(1992; Errata Jun 1993) American National Standard for Accessible and Usable Buildings and Facilities

FEDERAL SPECIFICATIONS (FS)

FS QQ-B-654	(Rev A; Am 1; Notice 1) Brazing Alloys, Silver
FS TT-P-1536	(Rev A) Plumbing Fixture Setting Compound
FS WW-C-440	(Rev B; Am 2) Clamps, Hose, (Low-Pressure)
FS WW-P-541/GEN	(Rev E; Am 1) Plumbing Fixtures
FS WW-P-541/5	(Rev B; Am 1) Plumbing Fixtures (Sinks, Kitchen, Service, and Laundry Trays)

FS WW-P-541/9	(Rev B; Am 1) Plumbing Fixtures (Medical Facilities, Land Use)
FS WW-V-35	(Rev C) Valve, Ball

FOUNDATION FOR CROSS-CONNECTION CONTROL AND HYDRAULIC RESEARCH (FCCHR)

FCCHR-01	(1993) Manual of Cross-Connection Control

HYDRAULIC INSTITUTE (HI)

HI-01	(1983) Standards for Centrifugal, Rotary & Reciprocating Pumps

MANUFACTURERS STANDARDIZATION SOCIETY OF THE VALVE AND FITTINGS INDUSTRY (MSS)

MSS SP-25	(1993) Standard Marking System for Valves, Fittings, Flanges and Unions
MSS SP-44	(1991) Steel Pipe Line Flanges
MSS SP-58	(1993) Pipe Hangers and Supports - Materials, Design and Manufacture
MSS SP-67	(1990) Butterfly Valves
MSS SP-69	(1991) Pipe Hangers and Supports - Selection and Application
MSS SP-70	(1990) Cast Iron Gate Valves, Flanged and Threaded Ends
MSS SP-71	(1990) Cast Iron Swing Check Valves, Flanges and Threaded Ends
MSS SP-72	(1992) Ball Valves with Flanged or Butt-welding Ends for General Service
MSS SP-73	(1991) Brazing Joints for Copper and Copper Alloy Pressure Fittings
MSS SP-78	(1987; R 1992) Cast Iron Plug Valves, Flanged and Threaded Ends
MSS SP-80	(1987) Bronze Gate, Globe, Angle and Check Valves
MSS SP-83	(1987) Steel Pipe Unions Socket-Welding and Threaded
MSS SP-84	(1990) Valves - Socket Welding and Threaded Ends
MSS SP-85	(1994) Cast Iron Globe & Angle Valves Flanged and Threaded Ends

NATIONAL ASSOCIATION OF PLUMBING-HEATING-COOLING CONTRACTORS (NAPHCC)

NAPHCC-01	(1993; Supple 1994) National Standard Plumbing Code (Non-Illustrated Edition)
NAPHCC-02	(1993) National Standard Plumbing Code Illustrated Edition

NATIONAL ELECTRICAL MANUFACTURERS ASSOCIATION (NEMA)

NEMA 250	(1991) Enclosures for Electrical Equipment (1000 Volts Maximum)

NATIONAL FIRE PROTECTION ASSOCIATION (NFPA)

NFPA 31	(1992) Installation of Oil Burning Equipment
NFPA 54	(1992) National Fuel Gas Code
NFPA 90A	(1993) Installation of Air Conditioning and Ventilating Systems

NSF INTERNATIONAL (NSF)

NSF Std 14	(1965; Rev Nov 1990) Plastics Piping Components and Related Materials

PLASTIC PIPE AND FITTINGS ASSOCIATION (PPFA)

PPFA-01	(1991) Plastic Pipe in Fire Resistive Construction

PLUMBING AND DRAINAGE INSTITUTE (PDI)

PDI WH 201	(1992) Water Hammer Arresters

STEEL STRUCTURES PAINTING COUNCIL (SSPC)

SSPC SP 5	(1991) White Metal Blast Cleaning

UNDERWRITERS LABORATORIES (UL)

UL 174	(1989; Rev thru Jan 1991) Household Electric Storage-Tank Water Heaters

1.2 STANDARD PRODUCTS

Specified materials and equipment shall be standard products of a manufacturer regularly engaged in the manufacture of such products. Specified equipment shall essentially duplicate equipment that has performed satisfactorily at least two years prior to bid opening.

1.3 PERFORMANCE REQUIREMENTS

1.3.1 Welding

Piping shall be welded in accordance with qualified procedures using performance-qualified welders and welding operators. Procedures and welders shall be qualified in accordance with ASME BPV IX. Welding procedures qualified by others, and welders and welding operators qualified by another employer, may be accepted as permitted by ASME B31.1. The Contracting Officer shall be notified 24 hours in advance of tests, and the tests shall be performed at the work site if practicable. Welders or welding operators shall apply their assigned symbols near each weld they make as a permanent record. Structural members shall be welded in accordance with Section 05055 WELDING, STRUCTURAL.

1.4 ELECTRICAL WORK

Motors, motor controllers and motor efficiencies shall conform to the requirements of Section 16415 ELECTRICAL WORK, INTERIOR. Electrical motor-driven equipment specified herein shall be provided complete with motors. Equipment shall be rated at 60 Hz, single phase, ac unless otherwise indicated. Where a motor controller is not provided in a motor-control center on the electrical drawings, a motor controller shall be as indicated. Motor controllers shall be provided complete with properly sized thermal-overload protection in each ungrounded conductor, auxiliary contact, and other equipment, at the specified capacity, and including an allowable service factor.

1.5 SUBMITTALS

Government approval is required for submittals with a "GA" designation; submittals having an "FIO" designation are for information only. The following shall be submitted in accordance with Section 01330 - SUBMITTAL PROCEDURES:

SD-01 Data

Welding; FIO.

A copy of qualified procedures and a list of names and identification symbols of qualified welders and welding operators.

SD-04 Drawings

Plumbing System; FIO.

Detail drawings consisting of illustrations, schedules, performance charts, instructions, brochures, diagrams, and other information to illustrate the requirements and operations of each system. Detail drawings for the complete plumbing system including piping layouts and locations of connections; dimensions for roughing-in, foundation, and support points; schematic diagrams and wiring diagrams or connection and interconnection diagrams. Detail drawings shall indicate clearances required for maintenance and operation. Where piping and equipment are to be supported other than as indicated,

details shall include loadings and proposed support methods. Mechanical drawing plans, elevations, views, and details, shall be drawn to scale.

SD-09 Reports

Tests, Flushing and Sterilization; FIO.

Test reports in booklet form showing all field tests performed to adjust each component and all field tests performed to prove compliance with the specified performance criteria, completion and testing of the installed system. Each test report shall indicate the final position of controls.

SD-13 Certificates

Materials and Equipment; FIO.

Where materials or equipment are specified to comply with requirements of AGA, or ASME, proof of such compliance. The label or listing of the specified agency will be acceptable evidence. In lieu of the label or listing, a written certificate may be submitted from an approved, nationally recognized testing organization equipped to perform such services, stating that the items have been tested and conform to the requirements and testing methods of the specified agency. Where equipment is specified to conform to requirements of the ASME Boiler and Pressure Vessel Code, the design, fabrication, and installation shall conform to the code.

SD-19 Operation and Maintenance Manuals

Plumbing System; FIO.

Six copies of the operation manual outlining the step-by-step procedures required for system startup, operation and shutdown. The manual shall include the manufacturer's name, model number, service manual, parts list, and brief description of all equipment and their basic operating features. Six copies of the maintenance manual listing routine maintenance procedures, possible breakdowns and repairs. The manual shall include piping and equipment layout and simplified wiring and control diagrams of the system as installed.

1.6 REGULATORY REQUIREMENTS

1.6.1 Plumbing

Plumbing work shall be in accordance with NAPHCC-01, unless otherwise stated and installed in accordance with NAPHCC-02.

1.7 PROJECT/SITE CONDITIONS

The Contractor shall become familiar with details of the work, verify dimensions in the field, and advise the Contracting Officer of any discrepancy before performing any work.

PART 2 - PRODUCTS

2.1 MATERIALS

Materials for various services shall be in accordance with TABLES I and II. Pipe schedules shall be selected based on service requirements. Pipe fittings shall be compatible with the applicable pipe materials. Plastic pipe, fittings, and solvent cement shall meet NSF Std 14 and shall be NSF listed for the service intended. Plastic pipe, fittings, and solvent cement used for potable hot and cold water service shall bear the NSF seal "NSF-PW." Pipe threads (except dry seal) shall conform to ASME B1.20.1. Grooved pipe couplings and fittings shall be from the same manufacturer. Material or equipment containing lead shall not be used in any potable water system. Plastic pipe shall not be installed in a pressure piping system in buildings greater than three stories including any basement levels.

2.1.1 Pipe Joint Materials

Grooved pipe shall not be used under ground. Joints and gasket materials shall conform to the following:

a. Brazing Material: Brazing material shall conform to AWS A5.8, BCuP-5.

b. Brazing Flux: Flux shall be in paste or liquid form appropriate for use with brazing material. Flux shall be as follows: lead-free; have a 100 percent flushable residue; contain slightly acidic reagents; contain potassium borides; and contain fluorides. Silver brazing materials shall be in accordance with FS QQ-B-654.

c. Solder Material: Solder metal shall conform to ASTM B 32 95-5 tin-antimony.

d. Solder Flux: Flux shall be liquid form, non-corrosive, and conform to ASTM B 813, Standard Test 1.

e. PTFE Tape: PTFE Tape, for use with Threaded Metal or Plastic Pipe, ASTM D 3308.

f. Plastic Solvent Cement for PVC Plastic Pipe: ASTM D 2564 and ASTM D 2855.

g. Plastic Solvent Cement for CPVC Plastic Pipe: ASTM F 493.

h. Flanged fittings including flanges, bolts, nuts, bolt patterns, etc. shall be in accordance with ASME B16.5 class 150 and shall have the manufacturer's trademark affixed in accordance with MSS SP-25. Flange material shall conform to ASTM A 105. Blind flange material shall conform to ASTM A 516 cold service and ASTM A 515 for hot service. Bolts shall be high strength or intermediate strength with material conforming to ASTM A 193.

2.1.2 Miscellaneous Materials

Miscellaneous materials shall conform to the following:

a. Water Hammer Arrester: PDI WH 201.

b. Copper, Sheet and Strip for Building Construction: ASTM B 370.

c. Asphalt Roof Cement: ASTM D 2822.

d. Supports for Off-The-Floor Plumbing Fixtures: ASME A112.6.1M.

e. Metallic Cleanouts: ASME A112.36.2M.

f. Plumbing Fixture Setting Compound: FS TT-P-1536, Type II.

g. Hypochlorites: AWWA B300.

h. Liquid Chlorine: AWWA B301.

i. Gauges - Pressure and Vacuum Indicating Dial Type - Elastic Element: ASME B40.1.

j. Thermometers: ANSI SAMA Z236.1 .

2.1.3 Pipe Insulation Material

Insulation shall be as specified in Section 15250 THERMAL INSULATION FOR MECHANICAL SYSTEMS.

2.2 PIPE HANGERS, INSERTS, AND SUPPORTS

Pipe hangers, inserts, and supports shall conform to MSS SP-58 and MSS SP-69.

2.3 VALVES

Valves shall be provided on supplies to equipment and fixtures. Valves 2-1/2 inches and smaller shall be bronze with threaded bodies for pipe and solder-type connections for tubing. Valves 3 inches and larger shall have flanged iron bodies and bronze trim. Pressure ratings shall be based upon the application. Valves shall conform to the following standards:

Description	Standard
Butterfly Valves	MSS SP-67
Cast-Iron Gate Valves, Flanged and Threaded Ends	MSS SP-70
Cast-Iron Swing Check Valves, Flanged and Threaded Ends	MSS SP-71
Ball Valves with Flanged Butt-Welding Ends for General Service	MSS SP-72

Ball Valves	FS WW-V-35
Cast-Iron Plug Valves, Flanged and Threaded Ends	MSS SP-78
Bronze Gate, Globe, Angle, and Check Valves	MSS SP-80
Steel Valves, Socket Welding and Threaded Ends	MSS SP-84
Cast-Iron Globe and Angle Valves, Flanged and Threaded Ends	MSS SP-85
Vacuum Relief Valves	ASSE 1001
Water Pressure Reducing Valves	ASSE 1003
Water Heater Drain Valves	ASSE 1005
Trap Seal Primer Valves	ASSE 1018
Temperature and Pressure Relief Valves for Automatically Fired Hot Water Boilers	ASME CSD-1 Safety Code No., Part CW, Article 5

2.3.1 Relief Valves

Water heaters and hot water storage tanks shall have a combination pressure and temperature (P&T) relief valve. The pressure relief element of a P&T relief valve shall have adequate capacity to prevent excessive pressure buildup in the system when the system is operating at the maximum rate of heat input. The temperature element of a P&T relief valve shall have a relieving capacity which is at least equal to the total input of the heaters when operating at their maximum capacity. Relief valves shall be rated according to ANSI Z21.22. Relief valves for systems where the maximum rate of heat input is less than 200,000 Btuh shall have 3/4 inch minimum inlets, and 3/4 inch outlets. Relief valves for systems where the maximum rate of heat input is greater than 200,000 Btuh shall have 1 inch minimum inlets, and 1 inch outlets. The discharge pipe from the relief valve shall be the size of the valve outlet.

2.3.2 Mixing Valves

Mixing valves, thermostatic-type, are shown in connection with rough plumbing. The valves shall conform to Fed. Spec. WW-P-541, except shall be line size with inlet pressure of 45 psi. The valves may be constructed with finished chromium plated bodies. Each valve shall be constructed to control the mixing of hot and cold water and to deliver water at a desired temperature regardless of pressure or input temperature changes. The control element shall be of an approved type. The body shall be of heavy cast bronze, and interior parts shall be brass, bronze, or copper. The valve shall be equipped with necessary stops, check valves, unions, and sediment strainers on the inlets. Mixing valves shall maintain water temperatures within 5 degrees F. of any setting.

2.4 FIXTURES

Fixtures shall be water conservation type, in accordance with NAPHCC-01. Fixtures for use by the physically handicapped shall be in accordance with CABO A117.1. Vitreous china, nonabsorbent, hard-burned, and vitrified throughout the body shall be provided, as indicated. Porcelain enameled ware shall have specially selected, clear white, acid-resisting enamel coating evenly applied on surfaces. No fixture will be accepted that shows cracks, crazes, blisters, thin spots, or other flaws. Fixtures shall be equipped with appurtenances such as traps, faucets, stop valves, and drain fittings. Each fixture and piece of equipment requiring connections to the drainage system, except grease interceptors, shall be equipped with a trap. Brass expansion or toggle bolts capped with acorn nuts shall be provided for supports, and polished chromium-plated pipe, valves, and fittings shall be provided where exposed to view. Fixtures with the supply discharge below the rim shall be equipped with backflow preventers. Plumbing fixtures shall generally be in accordance with FS WW-P-541/GEN, and shall be as indicated in paragraph PLUMBING FIXTURE SCHEDULE.

2.4.1 Lavatories

Vitreous china lavatories shall be provided with two integral molded lugs on the back-underside of the fixture and drilled for bolting to the wall in a manner similar to the hanger plate.

2.5 BACKFLOW PREVENTERS

Reduced pressure principle assemblies, double check valve assemblies, atmospheric (nonpressure) type vacuum breakers, and pressure type vacuum breakers shall be tested, approved, and listed in accordance with FCCHR-01. Backflow preventers with intermediate atmospheric vent shall conform to ASSE 1012. Reduced pressure principle backflow preventers shall conform to ASSE 1013. Hose connection vacuum breakers shall conform to ASSE 1011. Pipe applied atmospheric type vacuum breakers shall conform to ASSE 1001. Air gaps in plumbing systems shall conform to ASME A112.1.2.

2.6 DRAINS

2.6.1 Floor Drains

Floor and shower drains shall consist of a galvanized body, integral seepage pan, and adjustable perforated or slotted chromium-plated bronze, nickel-bronze, or nickel-brass strainer, consisting of grate and threaded collar. Floor drains shall be cast iron except where metallic waterproofing membrane is installed. Drains shall be of double drainage pattern for embedding in the floor construction. The seepage pan shall have weep holes or channels for drainage to the drainpipe. The strainer shall be adjustable to floor thickness. A clamping device for attaching flashing or waterproofing membrane to the seepage pan without damaging the flashing or waterproofing membrane shall be provided when required. Drains shall be provided with threaded or caulked connection. In lieu of a caulked joint between the drain outlet and waste pipe, a neoprene rubber gasket conforming to ASTM C 564 may be installed, provided that the drain is specifically designed for the rubber

gasket compression type joint. Floor and shower drains shall conform to ASME A112.21.1M.

2.7 TRAPS

Unless otherwise specified, traps shall be plastic per ASTM F 409 or copper-alloy adjustable tube type with slip joint inlet and swivel. Traps shall be without a cleanout. Tubes shall be copper alloy with walls not less than 0.032 inch thick within commercial tolerances, except on the outside of bends where the thickness may be reduced slightly in manufacture by usual commercial methods. Inlets shall have rubber washer and copper alloy nuts for slip joints above the discharge level. Swivel joints shall be below the discharge level and shall be of metal-to-metal or metal-to-plastic type as required for the application. Nuts shall have flats for wrench grip. Outlets shall have internal pipe thread, except that when required for the application, the outlets shall have sockets for solder-joint connections. The depth of the water seal shall be not less than 2 inches. The interior diameter shall be not more than 1/8 inch over or under the nominal size, and interior surfaces shall be reasonably smooth throughout. A copper alloy "P" trap assembly consisting of an adjustable "P" trap and threaded trap wall nipple with cast brass wall flange shall be provided for lavatories. The assembly shall be a standard manufactured unit and may have a rubber-gasketed swivel joint.

2.8 WATER HEATER

Water heater types and capacities shall be as indicated. Each primary water heater shall have controls adjustable from 90 to 140 degrees F. The initial setting shall be 100 degrees F. Each booster water heater shall have controls adjustable from 120 to 160 degrees F. The initial setting shall be 140 degrees F. The thermal efficiencies and stand by heat losses shall conform to TABLE III as determined by ASHRAE 90.1 for each type of water heater specified. The only exception is that the storage capacity need not meet the standard loss requirement if the tank surface area is not insulated to R-12.5 and if a standing light is not used.

2.8.1 Automatic Storage Type

Heaters shall be complete with control system, temperature gauge, and pressure gauge, and shall have ASME rated combination pressure and temperature relief valve.

2.8.2 Electric Type

Electric type water heaters shall conform to UL 174 with dual heating elements. Each element shall be 1.5 kW. The elements shall be wired so that only one element can operate at a time.

PART 3 - EXECUTION

3.1 GENERAL INSTALLATION REQUIREMENTS

Hubless cast-iron shall not be installed under concrete floor slabs. Piping located in air plenums shall conform to NFPA 90A requirements. Installation of

plastic pipe where in compliance with NFPA may be installed in accordance with PPFA-01. The plumbing system shall be installed complete with necessary fixtures, fittings, traps, valves, and accessories. Water and drainage piping shall be extended 5 feet outside the building, unless otherwise indicated. A gate valve or full port ball valve and drain shall be installed on the water service line inside the building approximately 6 inches above the floor from point of entry. Piping shall be connected to the exterior service lines or capped or plugged if the exterior service is not in place. Sewer and water pipes shall be laid in separate trenches, except when otherwise shown. Exterior underground utilities shall be at least 12 inches below the finish grade or as indicated on the drawings. If trenches are closed or the pipes are otherwise covered before being connected to the service lines, the location of the end of each plumbing utility shall be marked with a stake or other acceptable means. Valves shall be installed with control no lower than the valve body.

3.1.1 Water Pipe, Fittings, and Connections

3.1.1.1 Utilities

The piping shall be extended to fixtures, outlets, and equipment. The hot-water and cold-water piping system shall be arranged and installed to permit draining. The supply line to each item of equipment or fixture, except faucets, flush valves, or other control valves which are supplied with integral stops, shall be equipped with a shutoff valve to enable isolation of the item for repair and maintenance without interfering with operation of other equipment or fixtures. Supply piping to fixtures, faucets, hydrants, shower heads, and flushing devices shall be anchored to prevent movement.

3.1.1.2 Cutting and Repairing

The work shall be carefully laid out in advance, and unnecessary cutting of construction shall be avoided. Damage to building, piping, wiring, or equipment as a result of cutting shall be repaired by mechanics skilled in the trade involved.

3.1.1.3 Protection of Fixtures, Materials, and Equipment

Pipe openings shall be closed with caps or plugs during installation. Fixtures and equipment shall be tightly covered and protected against dirt, water, chemicals, and mechanical injury. Upon completion of the work, the fixtures, materials, and equipment shall be thoroughly cleaned, adjusted, and operated. Safety guards shall be provided for exposed rotating equipment.

3.1.1.4 Mains, Branches, and Runouts

Piping shall be installed as indicated. Pipe shall be accurately cut and worked into place without springing or forcing. Structural portions of the building shall not be weakened. Aboveground piping shall run parallel with the lines of the building, unless otherwise indicated. Branch pipes from service lines may be taken from top, bottom, or side of main, using crossover fittings required by structural or installation conditions. Supply pipes, valves, and fittings shall be kept a sufficient distance from other work and other services to permit not less than 1/2 inch between finished covering on

the different services. Bare and insulated water lines shall not bear directly against building structural elements so as to transmit sound to the structure or to prevent flexible movement of the lines. Water pipe shall not be buried in or under floors. Changes in pipe sizes shall be made with reducing fittings. Use of bushings will not be permitted except for use in situations in which standard factory fabricated components are furnished to accommodate specific excepted installation practice. Change in direction shall be made with fittings, except that bending of pipe 4 inches and smaller will be permitted, provided a pipe bender is used and wide sweep bends are formed. The center-line radius of bends shall be not less than six diameters of the pipe. Bent pipe showing kinks, wrinkles, flattening, or other malformations will not be acceptable.

3.1.1.5 Pipe Drains

Pipe drains indicated shall consist of 3/4 inch hose bibb with renewable seat and ball valve ahead of hose bibb. At other low points,3/4 inch brass plugs or caps shall be provided. Disconnection of the supply piping at the fixture is an acceptable drain.

3.1.1.6 Expansion and Contraction of Piping

Allowance shall be made throughout for expansion and contraction of water pipe. Each hot-water and hot-water circulation riser shall have expansion loops or other provisions such as offsets, changes in direction, etc., where indicated and/or required. Risers shall be securely anchored as required or where indicated to force expansion to loops. Branch connections from risers shall be made with ample swing or offset to avoid undue strain on fittings or short pipe lengths. Horizontal runs of pipe over 50 feet in length shall be anchored to the wall or the supporting construction about midway on the run to force expansion, evenly divided, toward the ends. Sufficient flexibility shall be provided on branch runouts from mains and risers to provide for expansion and contraction of piping. Flexibility shall be provided by installing one or more turns in the line so that piping will spring enough to allow for expansion without straining. If mechanical grooved pipe coupling systems are provided, the deviation from design requirements for expansion and contraction may be allowed pending approval of Contracting Officer.

3.1.1.7 Commercial-Type Water Hammer Arresters

Commercial-type water hammer arresters shall be provided on hot- and cold-water supplies and shall be located as generally indicated, with precise location and sizing to be in accordance with PDI WH 201. Water hammer arresters, where concealed, shall be accessible by means of 12" x 12" access doors. Commercial-type water hammer arresters shall conform to PDI WH 201. Vertical capped pipe columns will not be permitted.

3.1.2 Joints

Installation of pipe and fittings shall be made in accordance with the manufacturer's recommendations. Mitering of joints for elbows and notching of straight runs of pipe for tees will not be permitted. Joints shall be made up with fittings of compatible material and made for the specific purpose intended.

3.1.2.1 Threaded

Threaded joints shall have American Standard taper pipe threads conforming to ASME B1.20.1. Only male pipe threads shall be coated with graphite or with an approved graphite compound, or with an inert filler and oil, or shall have a polytetrafluoroethylene tape applied.

3.1.2.2 Union and Flanged

Unions, flanges and mechanical couplings shall not be concealed in walls, ceilings, or partitions. Unions shall be used on pipe sizes 2-1/2 inches and smaller; flanges shall be used on pipe sizes 3 inches and larger.

3.1.2.3 Copper Tube and Pipe

The tube or fittings shall not be annealed when making connections. Connections shall be made with a multiflame torch.

a. Brazed. Brazed joints shall be made in conformance with AWS B2.2, MSS SP-73, and CDA 404/O-RR with flux and are acceptable for line sizes. Copper to copper joints shall include the use of copper-phosphorus or copper-phosphorus-silver brazing metal without flux. Brazing of dissimilar metals (copper to bronze or brass) shall include the use of flux with either a copper-phosphorus, copper-phosphorus-silver or a silver brazing filler metal.

b. Soldered. Soldered joints shall be made with flux and are only acceptable for lines 2 inches and smaller. Soldered joints shall conform to ASME B31.5 and CDA 404/O-RR.

c. Copper Tube Extracted Joint. An extracted mechanical joint may be made in copper tube. Joint shall be produced with an appropriate tool by drilling a pilot hole and drawing out the tube surface to form a collar having a minimum height of three times the thickness of the tube wall. To prevent the branch tube from being inserted beyond the depth of the extracted joint, dimpled depth stops shall be provided. Branch tube shall be notched for proper penetration into fitting to ensure a free flow joint. Extracted joints shall be brazed in accordance with NAPHCC-01 using B-Cup series filler metal in accordance with MSS SP-73. Soldered extracted joints will not be permitted.

3.1.2.4 Plastic Pipe

PVC and CPVC pipe shall have joints made with solvent cement elastomeric, threading, (threading of Schedule 80 Pipe is allowed only where required for disconnection and inspection; threading of Schedule 40 Pipe is not allowed), or mated flanged.

3.1.3 Dissimilar Pipe Materials

Connections between ferrous and non-ferrous copper pipe shall be made with dielectric unions or flange waterways. Connecting joints between plastic and metallic pipe shall be made with transition fitting for the specific purpose.

3.1.4 Pipe Sleeves and Flashing

Pipe sleeves shall be furnished and set in their proper and permanent location.

3.1.4.1 Sleeve Requirements

Pipes passing through concrete or masonry walls or concrete floors or roofs shall be provided with pipe sleeves fitted into place at the time of construction. A modular mechanical type sealing assembly may be installed in lieu of a waterproofing clamping flange and caulking and sealing of annular space between pipe and sleeve. The seals shall consist of interlocking synthetic rubber links shaped to continuously fill the annular space between the pipe and sleeve with corrosion-protected carbon steel bolts, nuts, and pressure plates. The links shall be loosely assembled with bolts to form a continuous rubber belt around the pipe with a pressure plate under each bolt head and each nut. After the seal assembly is properly positioned in the sleeve, tightening of the bolt shall cause the rubber sealing elements to expand and provide a watertight seal between the pipe and the sleeve. Each seal assembly shall be sized as recommended by the manufacturer to fit the pipe and sleeve involved. Sleeves shall not be installed in structural members, except where indicated or approved. Rectangular and square openings shall be as detailed. Each sleeve shall extend through its respective floor, or roof, and shall be cut flush with each surface, except for special circumstances. Pipe sleeves passing through floors in wet areas such as mechanical equipment rooms, lavatories, kitchens, and other plumbing fixture areas shall extend a minimum of 4 inches above the finished floor. Unless otherwise indicated, sleeves shall be of a size to provide a minimum of 1/4 inch clearance between bare pipe and inside of sleeve or between jacket over insulation and sleeves. Sleeves in bearing walls shall be steel pipe or cast-iron pipe. Sleeves for membrane waterproof floors shall be steel pipe, cast-iron pipe, or plastic pipe. Membrane clamping devices shall be provided on pipe sleeves for waterproof floors. Sleeves in nonbearing walls or ceilings may be steel pipe, cast-iron pipe, galvanized sheet metal with lock-type longitudinal seam, or moisture-resistant fiber or plastic. Plastic sleeves shall not be used in nonbearing fire walls, roofs, or floor/ceilings. Except as otherwise specified, the annular space between pipe and sleeve, or between jacket over insulation and sleeve, shall be sealed as indicated with sealants conforming to ASTM C 920 and with a primer, backstop material and surface preparation as specified in Section 07920A - CAULKING AND SEALANTS. Pipes passing through sleeves in concrete floors over crawl spaces shall be sealed as specified above. The annular space between pipe and sleeve or between jacket over insulation and sleeve shall not be sealed for interior walls which are not designated as fire rated. Sleeves through below-grade walls in contact with earth shall be recessed 1/2 inch from wall surfaces on both sides. Annular space between pipe and sleeve shall be filled with backing material and sealants in the joint between the pipe and concrete or masonry wall as specified above. Sealant selected for the earth side of the wall shall be compatible with dampproofing/waterproofing materials that are to be applied over the joint sealant.

3.1.4.2 Flashing Requirements

Pipes passing through roof or floor waterproofing membrane shall be installed through a 16 ounce copper flashing, each within an integral skirt or flange. Flashing shall be suitably formed, and the skirt or flange shall extend not less than 8 inches from the pipe and shall be set over the roof or floor membrane in a solid coating of bituminous cement. The flashing shall extend up the pipe a minimum of 10 inches. For cleanouts, the flashing shall be turned down into the hub and caulked after placing the ferrule. Pipes passing through pitched roofs shall be flashed, using lead or copper flashing, with an adjustable integral flange of adequate size to extend not less than 8 inches from the pipe in all directions and lapped into the roofing to provide a watertight seal. The annular space between the flashing and the bare pipe or between the flashing and the metal-jacket-covered insulation shall be sealed as indicated. Flashing for dry vents shall be turned down into the pipe to form a waterproof joint. Pipes, up to and including 10 inches in diameter, passing through roof or floor waterproofing membrane may be installed through a cast-iron sleeve with caulking recess, anchor lugs, flashing-clamp device, and pressure ring with brass bolts. Flashing shield shall be fitted into the sleeve clamping device. Pipes passing through wall waterproofing membrane shall be sleeved as described above. A waterproofing clamping flange shall be installed.

3.1.4.3 Waterproofing

Waterproofing at floor-mounted water closets shall be accomplished by forming a flashing guard from soft-tempered sheet copper. The center of the sheet shall be perforated and turned down approximately 1-1/2 inches to fit between the outside diameter of the drainpipe and the inside diameter of the cast-iron or steel pipe sleeve. The turned-down portion of the flashing guard shall be embedded in sealant to a depth of approximately 1-1/2 inches; then the sealant shall be finished off flush to floor level between the flashing guard and drainpipe. The flashing guard of sheet copper shall extend not less than 8 inches from the drainpipe and shall be lapped between the floor membrane in a solid coating of bituminous cement. If cast-iron water closet floor flanges are used, the space between the pipe sleeve and drainpipe shall be sealed with sealant and the flashing guard shall be upturned approximately 1-1/2 inches to fit the outside diameter of the drainpipe and the inside diameter of the water closet floor flange. The upturned portion of the sheet fitted into the floor flange shall be sealed.

3.1.4.4 Optional Counterflashing

Instead of turning the flashing down into a dry vent pipe, or caulking and sealing the annular space between the pipe and flashing or metal-jacket-covered insulation and flashing, counterflashing may be accomplished by utilizing the following:

a. A standard roof coupling for threaded pipe up to 6 inches in diameter.

b. A tack-welded or banded-metal rain shield around the pipe.

3.1.4.5 Pipe Penetrations of Slab on Grade Floors

Where pipes, fixture drains, floor drains, cleanouts or similar items penetrate slab on grade floors, except at penetrations of floors with waterproofing membrane as specified in paragraphs Flashing Requirements and Waterproofing, a groove 1/4 to 1/2 inch wide by 1/4 to 3/8 inch deep shall be formed around the pipe, fitting or drain. The groove shall be filled with a sealant as specified in Section 07920A - CAULKING AND SEALANTS.

3.1.5 Fire Seal

Where pipes pass through fire walls, fire-partitions, fire-rated pipe chase walls or floors above grade, a fire seal shall be provided as specified in Section 07270 FIRESTOPPING.

3.1.6 Supports

3.1.6.1 General

Hangers used to support piping 2 inches and larger shall be fabricated to permit adequate adjustment after erection while still supporting the load. Pipe guides and anchors shall be installed to keep pipes in accurate alignment, to direct the expansion movement, and to prevent buckling, swaying, and undue strain. Piping subjected to vertical movement when operating temperatures exceed ambient temperatures shall be supported by variable spring hangers and supports or by constant support hangers. In the support of multiple pipe runs on a common base member, a clip or clamp shall be used where each pipe crosses the base support member. Spacing of the base support members shall not exceed the hanger and support spacing required for an individual pipe in the multiple pipe run.

3.1.6.2 Pipe Supports and Structural Bracing, Seismic Requirements

Piping and attached valves shall be supported and braced to resist seismic loads. Structural steel required for reinforcement to properly support piping, headers, and equipment, but not shown, shall be provided. Material used for supports shall be as specified in Section 05120 STRUCTURAL STEEL.

3.1.6.3 Pipe Hangers, Inserts, and Supports

Installation of pipe hangers, inserts and supports shall conform to MSS SP-58 and MSS SP-69, except as modified herein.

a. Types 5, 12, and 26 shall not be used.

b. Type 3 shall not be used on insulated pipe.

c. Type 18 inserts shall be secured to concrete forms before concrete is placed. Continuous inserts which allow more adjustment may be used if they otherwise meet the requirements for type 18 inserts.

d. Type 19 and 23 C-clamps shall be torqued per MSS SP-69 and shall have both locknuts and retaining devices furnished by the manufacturer. Field-fabricated C-clamp bodies or retaining devices are not acceptable.

e. Type 20 attachments used on angles and channels shall be furnished with an added malleable-iron heel plate or adapter.

f. Type 24 may be used only on trapeze hanger systems or on fabricated frames.

g. Type 39 saddles shall be used on insulated pipe 4 inches and larger when the temperature of the medium is 60 degrees F or higher. Type 39 saddles shall be welded to the pipe.

h. Type 40 shields shall:

(1) Be used on insulated pipe less than 4 inches.

(2) Be used on insulated pipe 4 inches and larger when the temperature of the medium is 60 degrees F or less.

(3) Have a high density insert for pipe 2 inches and larger and for smaller pipe sizes when the insulation is suspected of being visibly compressed, or distorted at or near the shield/insulation interface. High density inserts shall have a density of 8 pcf or greater.

i. Horizontal pipe supports shall be spaced as specified in MSS SP-69 and a support shall be installed not over 1 foot from the pipe fitting joint at each change in direction of the piping. Pipe supports shall be spaced not over 5 feet apart at valves. Operating temperatures in determining hanger spacing for PVC or CPVC pipe shall be 120 degrees F for PVC and 180 degrees F for CPVC. Horizontal pipe runs shall include allowances for expansion and contraction.

j. Vertical pipe shall be supported at each floor, except at slab-on-grade, at intervals of not more than 15 feet nor more than 8 feet from end of risers, and at vent terminations. Vertical pipe risers shall include allowances for expansion and contraction.

k. Type 40 shields used on insulated pipe shall have high density inserts with a density of 8 pcf or greater.

l. Type 35 guides using steel, reinforced polytetrafluoroethylene (PTFE) or graphite slides shall be provided to allow longitudinal pipe movement. Slide materials shall be suitable for the system operating temperatures, atmospheric conditions, and bearing loads encountered. Lateral restraints shall be provided as needed. Where steel slides do not require provisions for lateral restraint the following may be used:

(1) On pipe 4 inches and larger when the temperature of the medium is 60 degrees F or higher, a Type 39 saddle, welded to the pipe, may freely rest on a steel plate.

(2) On pipe less than 4 inches a Type 40 shield, attached to the pipe or insulation, may freely rest on a steel plate.

(3) On pipe 4 inches and larger carrying medium less that 60 degrees F a Type 40 shield, attached to the pipe or insulation, may freely rest on a steel plate.

m. Pipe hangers on horizontal insulated pipe shall be the size of the outside diameter of the insulation. The insulation shall be continuous through the hanger on all pipe sizes and applications.

n. Where there are high system temperatures and welding to piping is not desirable, the type 35 guide shall include a pipe cradle, welded to the guide structure and strapped securely to the pipe. The pipe shall be separated from the slide material by at least 4 inches or by an amount adequate for the insulation, whichever is greater.

o. Hangers and supports for plastic pipe shall not compress, distort, cut or abrade the piping, and shall allow free movement of pipe except where otherwise required in the control of expansion/contraction.

3.1.7 Welded Installation

Plumbing pipe weldments shall be as indicated. Changes in direction of piping shall be made with welding fittings only; mitering or notching pipe to form elbows and tees or other similar type construction will not be permitted. Branch connection may be made with either welding tees or forged branch outlet fittings. Branch outlet fittings shall be forged, flared for improvement of flow where attached to the run, and reinforced against external strains. Beveling, alignment, heat treatment, and inspection of weld shall conform to ASME B31.1. Weld defects shall be removed and repairs made to the weld, or the weld joints shall be entirely removed and rewelded. After filler metal has been removed from its original package, it shall be protected or stored so that its characteristics or welding properties are not affected. Electrodes that have been wetted or that have lost any of their coating shall not be used.

3.1.8 Pipe Cleanouts

Pipe cleanouts shall be the same size as the pipe except that cleanout plugs larger than 4 inches will not be required. Cleanouts in connection with other pipe, where indicated, shall be T-pattern, 90-degree branch drainage fittings with cast-brass screw plugs, except plastic plugs shall be installed in plastic pipe. Plugs shall be the same size as the pipe up to and including 4 inches. Cleanout tee branches with screw plug shall be installed at the foot of soil and waste stacks, at the foot of interior downspouts, on each connection to building storm drain where interior downspouts are indicated, and on each building drain outside the building. Cleanout tee branches may be omitted on stacks in single story buildings with slab-on-grade construction or where less than 18 inches of crawl space is provided under the floor. Cleanouts on pipe concealed in partitions shall be provided with chromium plated bronze, nickel bronze, nickel brass or stainless steel flush type access cover plates. Round access covers shall be provided and secured to plugs with tamper-proof securing screw. Square access covers may be provided with matching frames, anchoring lugs and tamper-proof cover screws. Cleanouts in finished walls shall have access covers and frames installed flush with the finished wall. Cleanouts installed in finished floors subject to foot traffic

shall be provided with a chrome-plated cast brass, nickel brass, or nickel bronze cover secured to the plug or cover frame and set flush with the finished floor. Heads of fastening screws shall not project above the cover surface. Where cleanouts are provided with adjustable heads, the heads shall be cast iron or plastic.

3.2 WATER HEATERS

3.2.1 Relief Valves

No valves shall be installed between a relief valve and its water heater or storage tank. The P&T relief valve shall be installed where the valve actuator comes in contact with the hottest water in the heater. Whenever possible, the relief valve shall be installed directly in a tapping in the tank or heater; otherwise, the P&T valve shall be installed in the hot-water outlet piping. A vacuum relief valve shall be provided on the cold water supply line to the hot-water storage tank or water heater and mounted above and within 6 inches above the top of the tank or water heater.

3.3 FIXTURES AND FIXTURE TRIMMINGS

Angle stops, straight stops, stops integral with the faucets, or concealed type of lock-shield, and loose-key pattern stops for supplies with threaded, sweat or solvent weld inlets shall be furnished and installed with fixtures. Where connections between copper tubing and faucets are made by rubber compression fittings, a beading tool shall be used to mechanically deform the tubing above the compression fitting. Exposed traps and supply pipes for fixtures and equipment shall be connected to the rough piping systems at the wall, unless otherwise specified under the item. Floor and wall escutcheons shall be as specified. Drain lines and hot water lines of fixtures for handicapped personnel shall be insulated and do not require polished chrome finish. Plumbing fixtures and accessories shall be installed within the space shown.

3.3.1 Fixture Connections

Where space limitations prohibit standard fittings in conjunction with the cast-iron floor flange, special short-radius fittings shall be provided. Connections between earthenware fixtures and flanges on soil pipe shall be made gastight and watertight with a closet-setting compound or neoprene gasket and seal. Use of natural rubber gaskets or putty will not be permitted. Fixtures with outlet flanges shall be set the proper distance from floor or wall to make a first-class joint with the closet-setting compound or gasket and fixture used.

3.3.2 Flushometer Valves

Flushometer valves shall be secured to prevent movement by anchoring the long finished top spud connecting tube to wall adjacent to valve with approved metal bracket. Flushometer valves for water closets shall be installed 39 inches above the floor.

3.3.3 Height of Fixture Rims Above Floor

Lavatories shall be mounted with rim 31 inches above finished floor. Wall-hung drinking fountains and water coolers shall be installed with rim 42 inches above floor. Wall-hung service sinks shall be mounted with rim 28 inches above the floor. Installation of fixtures for use by the physically handicapped shall be in accordance with CABO A117.1.

3.3.4 Fixture Supports

Fixture supports for off-the-floor lavatories, urinals, water closets, and other fixtures of similar size, design, and use, shall be of the chair-carrier type. The carrier shall provide the necessary means of mounting the fixture, with a foot or feet to anchor the assembly to the floor slab. Adjustability shall be provided to locate the fixture at the desired height and in proper relation to the wall. Support plates, in lieu of chair carrier, shall be fastened to the wall structure only where it is not possible to anchor a floor-mounted chair carrier to the floor slab.

3.3.4.1 Support for Solid Masonry Construction

Chair carrier shall be anchored to the floor slab. Where a floor-anchored chair carrier cannot be used, a suitable wall plate shall be imbedded in the masonry wall.

3.3.4.2 Support for Cellular-Masonry Wall Construction

Chair carrier shall be anchored to floor slab. Where a floor-anchored chair carrier cannot be used, a suitable wall plate shall be fastened to the cellular wall using through bolts and a back-up plate.

3.3.4.3 Support for Steel Stud Frame Partitions

Chair carrier shall be used. The anchor feet and tubular uprights shall be of the heavy duty design; and feet (bases) shall be steel and welded to a square or rectangular steel tube upright. Wall plates, in lieu of floor-anchored chair carriers, shall be used only if adjoining steel partition studs are suitably reinforced to support a wall plate bolted to these studs.

3.3.4.4 Wall-Mounted Water Closet Gaskets

Where wall-mounted water closets are provided, reinforced wax, treated felt, or neoprene gaskets shall be provided. The type of gasket furnished shall be as recommended by the chair-carrier manufacturer.

3.3.5 Backflow Prevention Devices

Plumbing fixtures, equipment, and pipe connections shall not cross connect or interconnect between a potable water supply and any source of nonpotable water. The backflow prevention device shall be installed where indicated and located so that no part of the device will be submerged. Access shall be provided for maintenance and testing. Each device shall be a standard commercial unit.

3.3.6 Access Panels

Access panels shall be provided for concealed valves and controls, or any item requiring inspection or maintenance. Access panels shall be of sufficient size and located so that the concealed items may be serviced, maintained, or replaced. Access panels shall be as specified in Section 05500 MISCELLANEOUS METAL.

3.3.7 Traps

Each trap shall be placed as near the fixture as possible, and no fixture shall be double-trapped. Traps installed on plastic pipe may be plastic conforming to ASTM D 3311.

3.4 IDENTIFICATION SYSTEMS

3.4.1 Identification Tags

Identification tags made of brass, engraved laminated plastic, or engraved anodized aluminum, indicating service and valve number shall be installed on valves, except those valves installed on supplies at plumbing fixtures. Tags shall be 1-3/8 inch minimum diameter, and marking shall be stamped or engraved. Indentations shall be black, for reading clarity. Tags shall be attached to valves with No. 12 AWG, copper wire, chrome-plated beaded chain, or plastic straps designed for that purpose.

3.4.2 Color Coding

Color coding for piping identification shall be as specified in Section 09900 PAINTING, GENERAL.

3.4.3 Color Coding Scheme for Locating Hidden Utility Components

Scheme shall be provided in buildings having suspended grid ceilings. The color coding scheme shall identify points of access for maintenance and operation of operable components which are not visible from the finished space and installed in the space directly above the suspended grid ceiling. The operable components shall include valves, dampers, switches, linkages and thermostats. The color coding scheme shall consist of a color code board and colored metal disks. Each colored metal disk shall be approximately 3/8 inch in diameter and secured to removable ceiling panels with fasteners. The fasteners shall be inserted into the ceiling panels so that the fasteners will be concealed from view. The fasteners shall be manually removable without tools and shall not separate from the ceiling panels when panels are dropped from ceiling height. Installation of colored metal disks shall follow completion of the finished surface on which the disks are to be fastened. The color code board shall have the approximate dimensions of 3 foot width, 30 inches height, and 1/2 inch thickness. The board shall be made of wood fiberboard and framed under glass or 1/16 inch transparent plastic cover. Unless otherwise directed, the color code symbols shall be approximately 3/4 inch in diameter and the related lettering in 1/2 inch high capital letters. The color code board shall be mounted and located in the mechanical or equipment room.

3.5 ESCUTCHEONS

Escutcheons shall be provided at finished surfaces where bare or insulated piping, exposed to view, passes through floors, walls, or ceilings, except in boiler, utility, or equipment rooms. Escutcheons shall be fastened securely to pipe or pipe covering and shall be satin-finish, corrosion-resisting steel, polished chromium-plated zinc alloy, or polished chromium-plated copper alloy. Escutcheons shall be either one-piece or split-pattern, held in place by internal spring tension or setscrew.

3.6 PAINTING

Painting of pipes, hangers, supports, and other iron work, either in concealed spaces or exposed spaces, is specified in Section 09900 PAINTING, GENERAL.

3.7 TESTS, FLUSHING, AND STERILIZATION

3.7.1 Plumbing System

The plumbing system shall be tested in accordance with NAPHCC-01.

3.7.2 Defective Work

If inspection or test shows defects, such defective work or material shall be replaced or repaired as necessary and inspection and tests shall be repeated. Repairs to piping shall be made with new materials. Caulking of screwed joints or holes will not be permitted.

3.7.3 System Flushing

After tests are completed, potable water piping shall be flushed. In general, sufficient water shall be used to produce a minimum water velocity of 2.5 feet per second through piping being flushed. Flushing shall be continued until discharge water shows no discoloration. System shall be drained at low points. Strainer screens shall be removed, cleaned, and replaced in line. After flushing and cleaning, systems shall be prepared for service by immediately filling water piping with clean, fresh potable water. Any stoppage, discoloration, or other damage to the finish, furnishings, or parts of the building due to the Contractor's failure to properly clean the piping system shall be repaired by the Contractor. When the work is complete, the hot-water system shall be adjusted for uniform circulation. Flushing devices and automatic control systems shall be adjusted for proper operation.

3.7.4 Operational Test

Upon completion of and prior to acceptance of the installation, the Contractor shall subject the plumbing system to operating tests to demonstrate satisfactory functional and operational efficiency. Such operating tests shall cover a period of not less than 8 hours for each system and shall include the following information in a report with conclusion as to the adequacy of the system:

a. Time, date, and duration of test.

b. Water pressures at the most remote and the highest fixtures.

c. Operation of each fixture and fixture trim.

d. Operation of each valve, hydrant, and faucet.

e. Pump suction and discharge pressures.

f. Temperature of each domestic hot-water supply.

g. Operation of each floor and roof drain by flooding with water.

h. Operation of each vacuum breaker and backflow preventer.

3.7.5 Sterilization

After pressure tests have been made, the entire domestic hot- and cold-water distribution system shall be sterilized. System shall be thoroughly flushed with water of sufficient velocity until all entrained dirt and other foreign material have been removed, before introducing chlorinating material. The chlorinating material shall be hypochlorites or liquid chlorine. Water chlorination procedure shall be in accordance with AWWA M20. The chlorinating material shall be fed into the water piping system at a constant rate at a concentration of at least 50 parts per million (ppm). A properly adjusted hypochlorite solution injected into the main with a hypochlorinator, or liquid chlorine injected into the main through a solution-feed chlorinator and booster pump, shall be used. The chlorine residual shall be checked at intervals to ensure that the proper level is maintained. Chlorine application shall continue until the entire main is filled. The water shall remain in the system for a minimum of 24 hours. Each valve in the system being sterilized shall be opened and closed several times during the contact period to ensure its proper disinfection. Following the 24-hour period, no less than 25 ppm chlorine residual shall remain in the system. Water tanks shall be disinfected by the addition of chlorine directly to the filling water. Following a 6 hour period, no less than 50 ppm chlorine residual shall remain in the tank. The system including the tanks shall then be flushed with clean water until the residual chlorine is reduced to less than one part per million. During the flushing period each valve and faucet shall be opened and closed several times. From several points in the system the Contracting Officer will take samples of water in properly sterilized containers for bacterial examination. The samples of water shall be tested for total coliform organisms (coliform bacteria, fecal coliform, streptococcal, and other bacteria) in accordance with AWWA-01. The testing method used shall be either the multiple-tube fermentation technique or the membrane-filter technique. The sterilizing shall be repeated until tests indicate the absence of coliform organisms (zero mean coliform density per 100 milliliters) in the samples for at least 2 full days. The system will not be accepted until satisfactory bacteriological results have been obtained.

3.8 PLUMBING FIXTURE SCHEDULE

INTEGRAL WATER CLOSET:

Entire unit shall be fabricated of Type 304 stainless steel. All exterior surfaces shall be polished to #4 finish, except the integral toilet seat which shall have a #7 sanitary finish. Cabinet material shall be 12 gauge. Backsplash panel, toilet bowl, flushing rim, integral seat, and trap cover materials shall be 14 gauge. All flush valves, water supply connections, and waste traps shall be located within the unit cabinet.

Toilet Bowl: Blowout, elongated bowl, 3" trap seal, capable of passing a 2 1/8" ball, integral seat.

Flushometer Valve - ASSE 1037, large diaphragm type with non-hold-open feature, backcheck angle control stop, and vacuum breaker. Minimum upper chamber inside diameter of not less than 2-5/8 inches at the point where the diaphragm is sealed between the upper and lower chambers. The maximum water use shall be 1.6 gallons per flush.

WATER CLOSET HANDICAPPED:

Siphon-jet, elongated bowl, top supply spud, ASME A112.19.2M, floor mounted. Floor flange shall be copper alloy, cast iron, or plastic. Top rim of bowl shall be 18 inches above the floor;

Gasket shall be wax type.

Seat - CID A-A-238, Type A, white plastic, elongated, open front.

Flushometer Valve - ASSE 1037, large diaphragm type with non-hold-open feature, backcheck angle control stop, and vacuum breaker. Minimum upper chamber inside diameter of not less than 2-5/8 inches at the point where the diaphragm is sealed between the upper and lower chambers. The maximum water use shall be 1.6 gallons per flush.

HANDICAPPED LAVATORY:

Vitreous china, FS WW-P-541/9, Type III, Class 2, Control A, 20 inches wide by 27 inches deep with gooseneck spout. Flow shall be limited to 0.25 gpm per cycle at a flowing water pressure of 80 psi if a metering device or fitting is used that limits the period of water discharge such as foot switch or fixture occupancy sensor. If a metering device is not used, the flow shall be limited to 2.5 gpm at a flowing water pressure of 80 psi.

Drain - Strainer shall be copper alloy or stainless steel.

KITCHEN SINK:

Self-rimming with three-hole faucet set, single bowl, stainless steel ASME A112.19.3M.

Faucet and Spout - Cast or wrought copper alloy. Aerator shall have internal threads.

Handle - Cast copper alloy, wrought copper alloy, or stainless steel. Single lever, blade type.

Drain Assembly - Plug, cup strainer, crossbars, jam nuts, washers, couplings, stopper, etc. shall be copper alloy or stainless steel.

SERVICE SINK:

Enameled cast iron, copper alloy or stainless steel rim guard, FS WW-P-541/5 corner, floor mounted 28 inches square,6-3/4 inches deep.

Faucet and Spout - Cast or wrought copper alloy, with top or bottom brace, with backflow preventer. Faucets shall have replaceable seat and the washer shall rotate onto the seat. Handles shall be lever type. Strainers shall have internal threads.

Drain Assembly - Plug, cup strainer, crossbars, jam nuts, washers, couplings, stopper, etc. shall be copper alloy or stainless steel.

Trap - Plastic.

3.9 POSTED INSTRUCTIONS

Framed instructions under glass or in laminated plastic, including wiring and control diagrams showing the complete layout of the entire system, shall be posted where directed. Condensed operating instructions explaining preventive maintenance procedures, methods of checking the system for normal safe operation, and procedures for safely starting and stopping the system shall be prepared in typed form, framed as specified above for the wiring and control diagrams and posted beside the diagrams. The framed instructions shall be posted before acceptance testing of the systems.

3.10 PERFORMANCE OF WATER HEATING EQUIPMENT

Standard rating condition terms are as follows:

EF = Energy factor, overall efficiency.

ET = Thermal efficiency with 70 degrees F delta T.

EC = Combustion efficiency, 100 percent - flue loss when smoke = o (trace is permitted).

SL = Standby loss in W/sq. ft. based on 80 degrees F delta T, or in percent per hour based on nominal 90 degrees F delta T.

HL = Heat loss of tank surface area.

V = Storage volume in gallons

3.10.1 Storage Water Heaters

3.10.1.1 Electric

a. Storage capacity of 120 gallons or less, and input rating of 12 kW or less: minimum energy factor (EF) shall be 0.95-0.00132V per 10 CFR 430.

TABLE I

PIPE AND FITTING MATERIALS FOR
DRAINAGE, WASTE, AND VENT PIPING SYSTEMS

		SERVICE				
Item No.	Pipe and Fitting Materials	A	B	C	D	E
1	Polyvinyl Chloride plastic drain, waste and vent pipe and fittings, ASTM D 2665, ASTM F 891, (Sch 40)	X	X	X	X	X

SERVICE:

A - Underground Building Soil, Waste and Storm Drain
B - Aboveground Soil, Waste, Drain In Buildings
C - Underground Vent
D - Aboveground Vent
E - Interior Rainwater Conductors Aboveground

TABLE II

PIPE AND FITTING MATERIALS FOR PRESSURE PIPING SYSTEM

		SERVICE		
Item No.	Pipe and Fitting Materials	A	B	C
1	Seamless copper pipe, ASTM B 42	X	X	
2	Seamless copper water tube, ASTM B 88	X**	X**	X***
3	Seamless and welded copper distribution tube (Type D) ASTM B 641	X**	X**	X****
4	Cast bronze threaded fittings, ASME B16.15 for use with Items 1 and 2	X	X	
5	Wrought copper and bronze solder-joint pressure fittings, ASME B16.22 for use with Items 1 and 2	X	X	X
6	Cast copper alloy solder-joint pressure fittings, ASME B16.18 for use with Items 1 and 2	X	X	X

A - Cold Water Aboveground

B - Hot Water 180 degrees F Maximum Aboveground

C - Cold Water Service Belowground

Indicated types are minimum wall thicknesses.

** - Type L - Hard

*** - Type K - Hard temper with brazed joints only or type K-soft temper without joints in or under floors

**** - In or under slab floors only brazed joints

TABLE III

STANDARD RATING CONDITIONS AND MINIMUM
PERFORMANCE RATINGS FOR WATER HEATING EQUIPMENT

A. STORAGE WATER HEATERS

FUEL	STORAGE CAPACITY LITERS		INPUT RATING	TEST PROCEDURE	MINIMUM PERFORMANCE
Elect.	120 min.	OR	12 kW min.	ASHRAE 90.1 (Addenda B)	SL = 1.9 W/sq. ft. maximum

TERMS:

EF = Energy factor, overall efficiency.
ET = Thermal efficiency with 70 degrees F delta T.
EC = Combustion efficiency, 100 percent - flue loss when smoke = 0 (trace is permitted).
SL = Standby loss in W/sq. ft. based on 80 degrees F delta T, or in percent per hour based on nominal 90 degrees F delta T.
HL = Heat loss of tank surface area
V = Storage volume in gallons

- - o 0 o - -

SECTION 15653

AIR-CONDITIONING SYSTEM (UNITARY TYPE)

PART 1 - GENERAL

1.1 REFERENCES

The publications listed below form a part of this specification to the extent referenced. The publications are referred to in the text by basic designation only.

AIR CONDITIONING AND REFRIGERATION INSTITUTE (ARI)

ARI 270	(1984) Sound Rating of Outdoor Unitary Equipment
ARI 410	(1991) Forced-Circulation Air-Cooling and Air-Heating Coils
ARI 495	(1993) Refrigerant Liquid Receivers
ARI 700	(1993) Specifications for Fluorocarbon and Other Refrigerants
ARI 710	(1986) Liquid-Line Driers
ARI 720	(1988) Refrigerant Access Valves and Hose Connectors
ARI 750	(1987) Thermostatic Refrigerant Expansion Valves
ARI 760	(1987) Solenoid Valves for Use with Volatile Refrigerants

AMERICAN NATIONAL STANDARDS INSTITUTE (ANSI)

ANSI A13.1	(1981; R 1993) Scheme for the Identification of Piping Systems
ANSI S1.13	(1971; R 1986) Methods for the Measurement of Sound Pressure Levels

AMERICAN SOCIETY FOR TESTING AND MATERIALS (ASTM)

ASTM A 47	(1990) Ferritic Malleable Iron Castings
ASTM A 48	(1994a) Gray Iron Castings
ASTM A 53	(1995a) Pipe, Steel, Black and Hot-Dipped, Zinc-Coated Welded and Seamless
ASTM A 106	(1994) Seamless Carbon Steel Pipe for High-Temperature Service

ASTM A 123	(1989a) Zinc (Hot-Dip Galvanized) Coatings on Iron and Steel Products
ASTM A 153	(1996) Zinc Coating (Hot-Dip) on Iron and Steel Hardware
ASTM A 181	(1995b) Forgings, Carbon Steel, for General-Purpose Piping
ASTM A 183	(1983; R 1990) Carbon Steel Track Bolts and Nuts
ASTM A 193	(1996) Alloy-Steel and Stainless Steel Bolting Materials for High-Temperature Service
ASTM A 234	(1996) Piping Fittings of Wrought Carbon Steel and Alloy Steel for Moderate and Elevated Temperatures
ASTM A 307	(1994) Carbon Steel Bolts and Studs, 60 000 PSI Tensile Strength
ASTM A 334	(1991) Seamless and Welded Carbon and Alloy-Steel Tubes for Low-Temperature Service
ASTM A 536	(1984; R 1993) Ductile Iron Castings
ASTM A 653	(1995) Steel Sheet, Zinc-Coated (Galvanized) or Zinc-Iron Alloy-Coated (Galvannealed) by the Hot-Dip Process
ASTM A 733	(1993) Welded and Seamless Carbon Steel and Austenitic Stainless Steel Pipe Nipples
ASTM B 32	(1995b) Solder Metal
ASTM B 62	(1993) Composition Bronze or Ounce Metal Castings
ASTM B 75	(1993) Seamless Copper Tube
ASTM B 88	(1993a) Seamless Copper Water Tube
ASTM B 117	(1994) Operating Salt Spray (Fog) Testing Apparatus
ASTM B 280	(1993a) Seamless Copper Tube for Air Conditioning and Refrigeration Field Service
ASTM B 650	(1995) Electrodeposited Engineering Chromium Coatings of Ferrous Substrates
ASTM C 67	(1994) Sampling and Testing Brick and Structural Clay Tile
ASTM C 534	(1994) Preformed Flexible Elastomeric Cellular Thermal Insulation in Sheet and Tubular Form

ASTM C 916	(1985; R 1990) Adhesives for Duct Thermal Insulation
ASTM C 1071	(1991) Thermal and Acoustical Insulation (Glass Fiber, Duct Lining Material)
ASTM D 520	(1984; R 1989) Zinc Dust Pigment
ASTM D 596	(1991) Reporting Results of Analysis of Water
ASTM D 1384	(1994) Corrosion Test for Engine Coolants in Glassware
ASTM D 1784	(1992) Rigid Poly(Vinyl Chloride) (PVC) Compounds and Chlorinated Poly(Vinyl Chloride) (CPVC) Compounds
ASTM D 2000	(1995) Rubber Products in Automotive Applications
ASTM D 3308	(1991a) PTFE Resin Skived Tape
ASTM E 84	(1994) Surface Burning Characteristics of Building Materials
ASTM E 437	(1992) Industrial Wire Cloth and Screens (Square Opening Series)
ASTM F 104	(1993) Nonmetallic Gasket Materials
ASTM F 872	(1984; R 1990) Filter Units, Air Conditioning: Viscous-Impingement Type, Cleanable

AMERICAN SOCIETY OF HEATING, REFRIGERATING AND AIR-CONDITIONING ENGINEERS (ASHRAE)

ASHRAE 15	(1994) Safety Code for Mechanical Refrigeration
ASHRAE 34	(1994) Number Designation and Safety Classification of Refrigerants
ASHRAE 52.1	(1992) Gravimetric and Dust-Spot Procedures for Testing Air-Cleaning Devices Used in General Ventilation for Removing Particulate Matter
ASHRAE 64	(1989) Methods of Testing Remote Mechanical-Draft Evaporative Refrigerant Condensers
ASHRAE 127	(1988) Method of Testing for Rating Computer and Data Processing Room Unitary Air-Conditioners

AMERICAN SOCIETY OF MECHANICAL ENGINEERS (ASME)

ASME B1.20.1	(1983; R 1992) Pipe Threads, General Purpose (Inch)

ASME B16.5	(1988; Errata Oct 88; B16.5a) Pipe Flanges and Flanged Fittings
ASME B16.9	(1993) Factory-Made Wrought Steel Buttwelding Fittings
ASME B16.11	(1991) Forged Fittings, Socket-Welding and Threaded
ASME B16.21	(1992) Nonmetallic Flat Gaskets for Pipe Flanges
ASME B16.22	(1989) Wrought Copper and Copper Alloy Solder Joint Pressure Fittings
ASME B16.26	(1988) Cast Copper Alloy Fittings for Flared Copper Tubes
ASME B16.39	(1986; R 1994) Malleable Iron Threaded Pipe Unions Classes 150, 250, and 300
ASME B31.1	(1992; B31.1a; B31.1b; B31.1c) Power Piping
ASME B31.5	(1992; B31.5a) Refrigeration Piping
ASME B40.1	(1991) Gauges - Pressure Indicating Dial Type - Elastic Element
ASME BPV VIII Div 1	(1995; Addenda Dec 1995) Boiler and Pressure Vessel Code; Section VIII, Pressure Vessels Division 1 - Basic Coverage
ASME BPV IX	(1995; Addenda Dec 1995) Boiler and Pressure Vessel Code; Section IX, Welding and Brazing Qualifications
ASME PTC 23	(1986; Addenda 1992, R 1992) Atmospheric Water Cooling Equipment

AMERICAN WATER WORKS ASSOCIATION (AWWA)

AWWA C606	(1987) Grooved and Shouldered Joints

AMERICAN WELDING SOCIETY (AWS)

AWS-01	(1991) Brazing Handbook
AWS A5.8	(1992) Filler Metals for Brazing and Braze Welding
AWS D1.1	(1994) Structural Welding Code - Steel

ASSOCIATION OF HOME APPLIANCE MANUFACTURERS (AHAM)

AHAM-01	(1994) Directory of Certified Room Air Conditioners

CALIFORNIA REDWOOD ASSOCIATION (CRA)

CRA-01	(1992) Standard Specifications for Grades of California Redwood Lumber

COOLING TOWER INSTITUTE (CTI)

CTI ACT-105	(1990) Acceptance Test Code for Water Cooling Towers
CTI Std-103	(1986) The Design of Cooling Towers with Redwood Lumber
CTI Std-111	(1986) Gear Speed Reducers
CTI Std-114	(1986) Specifications for the Design of Cooling Towers with Douglas Fir Lumber
CTI Std-134	(1985) Plywood for Use in Cooling Towers
CTI Std-137	(1988) Fiberglass Pultruded Structural Products for Use in Cooling Towers
CTI WMS-112	(1986) Pressure Preservative Treatment of Lumber

EXPANSION JOINT MANUFACTURERS ASSOCIATION (EJMA)

EJMA-01	(1993) EJMA Standards

HYDRAULIC INSTITUTE (HI)

HI-01	(1983) Standards for Centrifugal, Rotary and Reciprocating Pumps

MANUFACTURERS STANDARDIZATION SOCIETY OF THE VALVE AND FITTINGS INDUSTRY (MSS)

MSS SP-25	(1993) Standard Marking System for Valves, Fittings, Flanges and Unions
MSS SP-58	(1993) Pipe Hangers and Supports - Materials, Design and Manufacture
MSS SP-67	(1990) Butterfly Valves
MSS SP-69	(1991) Pipe Hangers and Supports - Selection and Application
MSS SP-70	(1990) Cast Iron Gate Valves, Flanged and Threaded Ends

MSS SP-71	(1990) Cast Iron Swing Check Valves, Flanges and Threaded Ends
MSS SP-72	(1992) Ball Valves with Flanged or Butt-Welding Ends
MSS SP-78	(1987; R 1992) Cast Iron Plug Valves, Flanged and Threaded Ends
MSS SP-80	(1987) Bronze Gate, Globe, Angle and Check Valves
MSS SP-85	(1994) Cast Iron Globe & Angle Valves, Flanged and Threaded Ends
MSS SP-110	(1992) Ball Valves Threaded, Socket-Welding, Solder Joint, Grooved and Flared Ends

NATIONAL ELECTRICAL MANUFACTURERS ASSOCIATION (NEMA)

NEMA 250	(1991) Enclosures for Electrical Equipment (1000 Volts Maximum)
NEMA ICS 6	(1993) Enclosures for Industrial Control and Systems
NEMA MG 1	(1993; Rev 1-1993) Motors and Generators
NEMA MG 2	(1989; Rev 1) Safety Standard for Construction and Guide for Selection, Installation, and Use of Electric Motors and Generators

NATIONAL FIRE PROTECTION ASSOCIATION (NFPA)

NFPA 54	(1992) National Fuel Gas Code
NFPA 70	(1996) National Electrical Code
NFPA 90A	(1993) Installation of Air Conditioning and Ventilating Systems
NFPA 255	(1990) Method of Test of Surface Burning Characteristics of Building Materials

NORTH AMERICAN INSULATION MANUFACTURERS ASSOCIATION (NAIMA)

NAIMA-01	(1993) Fibrous Glass Duct Construction Standards

SHEET METAL AND AIR CONDITIONING CONTRACTORS NATIONAL ASSOCIATION (SMACNA)

SMACNA-05	(1992) Fire, Smoke and Radiation Damper Installation Guide for HVAC Systems
SMACNA-06	(1995) HVAC Duct Construction Standards - Metal and Flexible

SMACNA-10	(1985) HVAC Air Duct Leakage Test Manual

UNDERWRITERS LABORATORIES (UL)

UL-01	(1996; Supple) Building Materials Directory
UL-03	(1996) Electrical Construction Materials Directory
UL-05	(1996; Supple) Fire Resistance Directory
UL 181	(1996; Rev Oct 1996) Factory-Made Air Ducts and Air Connectors
UL 207	(1993; Rev thru Mar 1995) Refrigerant-Containing Components and Accessories, Nonelectrical
UL 214	(1993) Tests for Flame-Propagation of Fabrics and Films
UL 484	(1993; Rev thru Aug 1996) Room Air Conditioners
UL 555	(1995) Fire Dampers
UL 586	(1990; Rev Apr 1995) High Efficiency, Particulate, Air Filter Units
UL 723	(1996) Test for Surface Burning Characteristics of Building Materials
UL 900	(1994) Test Performance of Air Filter Units
UL 1995	(1995) Heating and Cooling Equipment

WESTERN WOOD PRODUCTS ASSOCIATION (WWPA)

WWPA-01	(1995; Supple Nos. 1, 2, and 3) Western Lumber Grading Rules 95

1.2 SUBMITTALS

Government approval is required for submittals with a "GA" designation; submittals having an "FIO" designation are for information only. The following shall be submitted in accordance with Section 01330 - SUBMITTAL PROCEDURES:

SD-01 Data

Air-Conditioning/Heat Pump System; FIO.

Manufacturer's standard catalog data, prior to the purchase or installation of a particular component, shall be highlighted to show brand name, model number, size, options, performance charts and curves, etc. in sufficient detail to demonstrate compliance with contract requirements. Data shall be submitted for each specified component. Data shall include manufacturer's recommended

installation instructions and procedures. If vibration isolation is specified for a unit, vibration isolator literature shall be included containing catalog cuts and certification that the isolation characteristics of the isolators provided meet the manufacturer's recommendations.

Spare Parts Data; FIO.

Spare parts data for each different item of equipment specified, after approval of detail drawings and not later than 1 months prior to the date of beneficial occupancy. The data shall include a complete list of parts and supplies, with current unit prices and source of supply, a recommended spare parts list for 1 year of operation, and a list of the parts recommended by the manufacturer to be replaced on a routine basis.

SD-04 Drawings

Air-Conditioning/Heat Pump System; GA.

Drawings shall provide adequate detail to demonstrate compliance with contract requirements. Drawings shall consist of:

(1) Equipment layouts which identify assembly and installation details.

(2) Plans and elevations which identify clearances required for maintenance and operation.

(3) Wiring diagrams which identify each component individually and interconnected or interlocked relationships between components.

(4) Foundation drawings, bolt-setting information, and foundation bolts prior to concrete foundation construction for equipment indicated or required to have concrete foundations.

(5) Details, if piping and equipment are to be supported other than as indicated, which include loadings and type of frames, brackets, stanchions, or other supports.

(6) Automatic temperature control diagrams and control sequences.

(7) Installation details which includes the amount of factory set superheat and corresponding refrigerant pressure/temperature.

SD-06 Instructions

Framed Instructions; FIO.

Framed instructions for posting, at least 2 weeks prior to construction completion.

SD-07 Schedules

Tests; FIO.

A letter, at least 10 working days in advance of each tests, advising the Contracting Officer of the test. Individual letters shall be submitted for

the condenser water system, refrigerant system, ductwork leak tests, cooling tower tests, condenser water quality tests, and the system performance tests. Each letter shall identify the date, time, and location for each test.

SD-09 Reports

Tests; GA.

Six copies of each test containing the information described below in bound 8-1/2 by 11 inch booklets. Individual reports shall be submitted for the condenser water system, refrigerant system, ductwork leak tests, and the cooling tower tests.

(1) The date the tests were performed.

(2) A list of equipment used, with calibration certifications.

(3) Initial test summaries.

(4) Repairs/adjustments performed.

(5) Final test results.

System Performance Tests; GA.

Six copies of the report shall be provided in bound 8-1/2 by 11 inch booklets. The report shall document compliance with the specified performance criteria upon completion and testing of the system. The report shall indicate the number of days covered by the tests and any conclusions as to the adequacy of the system. The report shall also include the following information and shall be taken at least three different times at outside dry-bulb temperatures that are at least 5 degrees F apart:

(1) Date and outside weather conditions.

(2) The load on the system based on the following:

(a) The refrigerant used in the system.
(b) Condensing temperature and pressure.
(c) Suction temperature and pressure.
(d) Ambient, condensing and coolant temperatures
(e) Running current, voltage and proper phase sequence for each phase of all motors.

(3) The actual on-site setting of operating and safety controls.

(4) Thermostatic expansion valve superheat - value as determined by field test

(5) Subcooling

(6) High and low refrigerant temperature switch set-points

(7) Low oil pressure switch set-point

(8) Defrost system timer and thermostat set-points

(9) Moisture content

(10) Capacity control set-points

(11) Field data and adjustments which affect unit performance and energy consumption.

(12) Field adjustments and settings which were not permanently marked as an integral part of a device.

Inspections; FIO.

Test report, at the completion of one year of service, in bound 8-1/2 by 11 inch booklets. The report shall identify the condition of the cooling tower and condenser. The report shall also include a comparison of the condition of the cooling tower and condenser with the manufacturer's recommended operating conditions.

SD-13 Certificates

Air-Conditioning/Heat Pump System; FIO.

Where the system, components, or equipment are specified to comply with requirements of ARI, ASHRAE, ASME, or UL, proof of such compliance shall be provided. The label or listing of the specified agency shall be acceptable evidence. In lieu of the label or listing, a written certificate from an approved, nationally recognized testing organization equipped to perform such services, stating that the items have been tested and conform to the requirements and testing methods of the specified agency may be submitted. When performance requirements of this project's drawings and specifications vary from standard ARI rating conditions, computer printouts, catalog, or other application data certified by ARI or a nationally recognized laboratory as described above shall be included. If ARI does not have a current certification program that encompasses such application data, the manufacturer may self certify that his application data complies with project performance requirements in accordance with the specified test standards.

Service Organizations; FIO.

A certified list of qualified permanent service organizations for support of the equipment which includes their addresses and qualifications. The service organizations shall be reasonably convenient to the equipment installation and be able to render satisfactory service to the equipment on a regular and emergency basis during the warranty period of the contract.

SD-19 Operation and Maintenance Manuals

Operation Manual; FIO.

Six complete copies of an operation manual in bound 8-1/2 by 11 inch booklets listing step-by-step procedures required for system startup, operation, and shutdown. The booklets shall include the manufacturer's name, model number, and parts list. The manuals shall include the manufacturer's name, model

number, service manual, and a brief description of all equipment and their basic operating features.

Maintenance Manual; FIO.

Six complete copies of maintenance manual in bound 8-1/2 by 11 inch booklets listing routine maintenance procedures, possible breakdowns and repairs, and a trouble shooting guide. The manuals shall include piping and equipment layouts and simplified wiring and control diagrams of the system as installed.

1.3 DELIVERY, STORAGE, AND HANDLING

Stored items shall be protected from the weather and contamination. Proper protection and care of all material before, during, and after installation shall be the Contractor's responsibility. Any materials found to be damaged shall be replaced at the Contractor's expense. During installation, piping and similar openings shall be capped to keep out dirt and other foreign matter.

1.4 PROJECT/SITE CONDITIONS

1.4.1 Verification of Dimensions

The Contractor shall become familiar with all details of the work, verify dimensions in the field, and advise the Contracting Officer of any discrepancy before performing any work.

1.4.2 Drawings

Because of the small scale of the drawings, it is not possible to indicate all offsets, fittings, and accessories that may be required. The Contractor shall carefully investigate the plumbing, fire protection, electrical, structural and finish conditions that would affect the work to be performed and arrange such work accordingly, furnishing required offsets, fittings, and accessories to meet such conditions. Equipment, ductwork, and piping arrangements shall fit into space allotted and allow adequate acceptable clearances for installation, replacement, entry, servicing, and maintenance.

PART 2 - PRODUCTS

2.1 STANDARD PRODUCTS

Materials and equipment shall be standard products of a manufacturer regularly engaged in the manufacturing of such products, which are of a similar material, design and workmanship. The standard products shall have been in satisfactory commercial or industrial use for 2 years prior to bid opening. The 2 year use shall include applications of equipment and materials under similar circumstances and of similar size. The 2 years experience shall be satisfactorily completed by a product which has been sold or is offered for sale on the commercial market through advertisements, manufacturer's catalogs, or brochures. Products having less than a 2 year field service record shall be acceptable if a certified record of satisfactory field operation, for not less than 6000 hours exclusive of the manufacturer's factory tests, can be

shown. Products shall be supported by a service organization. System components shall be environmentally suitable for the indicated locations.

2.2 NAMEPLATES

Major equipment including compressors, condensers, receivers, heat exchanges, fans, cooling towers, pumps and motors shall have the manufacturer's name, address, type or style, model or serial number, and catalog number on a plate secured to the item of equipment. Plates shall be durable and legible throughout equipment life and made of anodized aluminum or stainless steel. Plates shall be fixed in prominent locations with nonferrous screws or bolts.

2.3 ELECTRICAL WORK

Electrical equipment, motors, motor efficiencies, and wiring shall be in accordance with Section 16415 - ELECTRICAL WORK, INTERIOR. Electrical motor driven equipment specified shall be provided complete with motors, motor starters, and controls. Electrical characteristics shall be as shown, and unless otherwise indicated, all motors of 1 horsepower and above with open, dripproof, totally enclosed, or explosion proof fan cooled enclosures, shall be high efficiency type. Field wiring shall be in accordance with manufacturer's instructions. Each motor shall conform to NEMA MG 1 and NEMA MG 2 and be of sufficient size to drive the equipment at the specified capacity without exceeding the nameplate rating of the motor. Motors shall be continuous duty with the enclosure specified. Motor starters shall be provided complete with thermal overload protection and other appurtenances necessary for the motor control indicated. Motors shall be furnished with a magnetic across-the-line or reduced voltage type starter as required by the manufacturer. Motor duty requirements shall allow for maximum frequency start-stop operation and minimum encountered interval between start and stop. Motors shall be sized for the applicable loads. Motor torque shall be capable of accelerating the connected load within 20 seconds with 80 percent of the rated voltage maintained at motor terminals during one starting period. Motor bearings shall be fitted with grease supply fittings and grease relief to outside of enclosure. Manual or automatic control and protective or signal devices required for the operation specified and any control wiring required for controls and devices specified, but not shown, shall be provided.

2.4 MISCELLANEOUS MATERIALS

2.4.1 Unicellular Plastic Foam

Unicellular plastic foam shall be in accordance with ASTM C 534, Form T, except that D-Factor shall not exceed 0.28 at 75 degrees F mean temperature.

2.4.2 Bird Screen

Screen shall be in accordance with ASTM E 437, Type 1, Class 1, 2 by 2 mesh, 0.063 inch diameter aluminum wire or 0.031 inch diameter stainless steel wire.

2.5 UNITARY EQUIPMENT, PACKAGE SYSTEM

Unit shall be an air-cooled factory assembled, weatherproof packaged unit as indicated. Unit shall be the air-conditioning type conforming to applicable

Underwriters Laboratories (UL) standards including UL 1995. Unit shall be rated in accordance with ARI 210/240. Unit shall be provided with equipment as specified in paragraph "System Components". Evaporator or supply fans shall be double-width, double inlet, forward curved, backward inclined, or airfoil blade, centrifugal scroll type. Motors shall have dripproof enclosures. Condenser fans shall be manufacturer's standard for the unit specified and may be either propeller or centrifugal scroll type. Unit shall be provided with a factory operating charge of refrigerant and oil or a holding charge. Unit shipped with a holding charge shall be field charged with refrigerant and oil in accordance with manufacturer's recommendations. Outdoor unit shall produce a maximum ARI sound rating of 10 bels in accordance with ARI 270.

2.5.1 Air-to-Refrigerant Coils

Air-to-refrigerant coils shall have nonferrous tubes of 3/8 inch minimum diameter with copper or aluminum fins that are mechanically bonded or soldered to the tubes. Casing shall be galvanized steel or aluminum. Contact of dissimilar metals shall be avoided. Coils shall be tested in accordance with ASHRAE 15 at the factory and be suitable for the working pressure of the installed system. Each coil shall be dehydrated and sealed after testing and prior to evaluation and charging. Each unit shall be provided with a factory operating charge of refrigerant and oil or a holding charge. Unit shipped with a holding charge shall be field charged. Separate expansion devices shall be provided for each compressor circuit.

2.5.2 Compressor

Compressor shall be direct drive, semi-hermetic or hermetic reciprocating, or scroll type capable of operating at partial load conditions. Compressor shall be capable of continuous operation down to the lowest step of unloading as specified. If standard with the manufacturer, two or more compressors may be used in lieu of a single compressor with unloading capabilities, in which case the compressors shall operate in sequence, and each compressor shall have an independent refrigeration circuit through the condenser and evaporator. Compressors shall start in the unloaded position. Each compressor shall be provided with vibration isolators, crankcase heater, thermal overloads, high and low pressure safety cutoffs and protection against short cycling.

2.5.3 Refrigeration Circuit

Refrigerant containing components shall comply with ASHRAE 15 and be factory tested, cleaned, dehydrated, charged, and sealed. Refrigerant charging valves and connections, and pumpdown valves shall be provided for each circuit. Filter-drier shall be provided in each liquid line and be reversible-flow type. Refrigerant flow control devices shall be an adjustable superheat thermostatic expansion valve with external equalizer matched to coil, capillary or thermostatic control, and a pilot solenoid controlled, leak-tight, four-way refrigerant flow reversing valve.

2.5.4 Unit Controls

Unit shall be internally prewired with a 24 or 120 volt control circuit powered by an internal transformer. Terminal blocks shall be provided for

power wiring and external control wiring. Unit shall have cutoffs for high and low pressure, and low oil pressure for compressors with positive displacement oil pumps, supply fan failure and safety interlocks on all service panels. Adjustable-cycle timers shall prevent short-cycling. Multiple compressors shall be staged by means of a time delay. Unit shall be internally protected by fuses or a circuit breaker in accordance with UL 1995. Low cost cooling shall be made possible by means of a control circuit which will modulate dampers to provide 100 percent outside air while locking out compressors.

2.6 SYSTEM COMPONENTS

2.6.1 Refrigerant and Oil

Refrigerant shall be one of the fluorocarbon gases. Refrigerants shall have number designations and safety classifications in accordance with ASHRAE 34. Refrigerants shall meet the requirements of ARI 700 as a minimum. Refrigerants shall have an Ozone Depletion Potential (ODP) of less than or equal to 0.05. Contractor shall provide and install a complete charge of refrigerant for the installed system as recommended by the manufacturer. Except for factory sealed units, two complete charges of lubricating oil for each compressor crankcase shall be furnished. One charge shall be used during the system performance testing period. Following the satisfactory completion of the performance testing, the oil shall be drained and replaced with a second charge. Lubricating oil shall be of a type and grade recommended by the manufacturer for each compressor. Where color leak indicator dye is incorporated, charge shall be in accordance with manufacturer's recommendation.

2.6.2 Fans

Fan wheel shafts shall be supported by either maintenance-accessible lubricated antifriction block-type bearings, or permanently lubricated ball bearings. Unit fans shall be selected to produce the cfm required at the fan total pressure. Motor starters, if applicable, shall be magnetic across-the-line type with a dripproof enclosure. Thermal overload protection shall be of the manual or automatic-reset type. Fan wheels or propellers shall be constructed of aluminum or galvanized steel. Centrifugal fan wheel housings shall be of galvanized steel, and both centrifugal and propeller fan casings shall be constructed of aluminum or galvanized steel. Steel elements of fans, except fan shafts, shall be hot-dipped galvanized after fabrication or fabricated of mill galvanized steel. Mill-galvanized steel surfaces and edges damaged or cut during fabrication by forming, punching, drilling, welding, or cutting shall be recoated with an approved zinc-rich compound. Fan wheels or propellers shall be statically and dynamically balanced. Direct-drive fan motors shall be of the multiple-speed variety. The sheave size shall be selected so that the fan speed at the approximate midpoint of the sheave adjustment will produce the specified air quantity. Centrifugal scroll-type fans shall be provided with streamlined orifice inlet and V-belt drive. Each drive will be independent of any other drive. Propeller fans shall be direct-drive drive type with fixed pitch blades. V-belt driven fans shall be mounted on a corrosion protected drive shaft supported by either maintenance-accessible lubricated antifriction block-type bearings, or permanently lubricated ball bearings. Each drive will be independent of any

other drive. Drive bearings shall be protected with water slingers or shields. V-belt drives shall be fitted with guards where exposed to contact by personnel and fixed pitch sheaves.

2.6.3 Primary/Supplemental Heating

2.6.3.1 Electric Heating Coil

Coil shall be an electric duct heater in accordance with UL 1995 and NFPA 70. Coil shall be duct- or unit-mounted. Coil shall be of the nickel chromium resistor, single stage, strip or nickel chromium resistor, single stage, strip or stainless steel, fin tubular type. Coil shall be provided with a built-in or surface-mounted high-limit thermostat interlocked electrically so that the coil cannot be energized unless the fan is energized. Coil casing and support brackets shall be of galvanized steel or aluminum. Coil shall be mounted to eliminate noise from expansion and contraction and be completely accessible for service.

2.6.4 Pressure Vessels

Pressure vessels shall conform to ASME BPV VIII Div 1 or UL 207, as applicable for maximum and minimum pressure or temperature encountered. Where referenced publications do not apply, pressure components shall be tested at 1-1/2 times design working pressure. Refrigerant wetted carbon steel surfaces shall be pickled or abrasive blasted free of mill scale, cleaned, dried, charged, and sealed.

2.6.5 Internal Dampers

Dampers shall be parallel blade type with renewable blade seals and be integral to the unitary unit. Damper provisions shall be provided for each outside air intake, exhaust, economizer, and mixing boxes. Dampers shall automatic modulation and operate as specified.

2.6.6 Cabinet Construction

Casings for the specified unitary equipment shall be constructed of galvanized steel or aluminum sheet metal and galvanized or aluminum structural members. Minimum thickness of single wall exterior surfaces shall be 18 gauge galvanized steel or .071 inch thick aluminum on units with a capacity above 20 tons and 20 gauge galvanized steel or 0.064 inch thick aluminum on units with a capacity less than 20 tons. Casing shall be fitted with lifting provisions, access panels or doors, fan vibration isolators, electrical control panel, corrosion-resistant components, structural support members, insulated condensate drip pan and drain, and internal insulation in the cold section of the casing. Where double-wall insulated construction is proposed, minimum exterior galvanized sheet metal thickness shall be 20 gauge. Provisions to permit replacement of major unit components shall be incorporated. Penetrations of cabinet surfaces, including the floor, shall be sealed. Unit shall be fitted with a drain pan which extends under all areas where water may accumulate. Drain pan shall be fabricated from Type 300 stainless steel, galvanized steel with protective coating as required, or an approved plastic material. Pan insulation shall be water impervious. Extent and effectiveness of the insulation of unit air containment surfaces shall prevent, within

limits of the specified insulation, heat transfer between the unit exterior and ambient air, heat transfer between the two conditioned air streams, and condensation on surfaces. Insulation shall conform to ASTM C 1071. Paint and finishes shall comply with the requirements specified in paragraph "Factory Coating".

2.6.6.1 Outdoor Cabinet

Outdoor cabinets shall be suitable for outdoor service with a weathertight, insulated and corrosion-protected structure. Cabinets constructed exclusively for indoor service which have been modified for outdoor service are not acceptable.

2.7 INSULATION

2.7.1 Factory Installed Insulation

Factory applied insulation shall be as specified for the equipment to be insulated except that refrigerant suction lines shall be insulated with unicellular plastic foam. Insulation shall comply with the fire hazard rating specified in Section 15250 - THERMAL INSULATION FOR MECHANICAL SYSTEMS.

2.8 TEMPERATURE CONTROLS

Temperature controls shall be fully coordinated with and integrated into the existing air-conditioning system.

2.9 REFRIGERANT PIPING

Refrigerant piping, valves, fittings, and accessories shall conform to the requirements of ASHRAE 15 and ASME B31.5.

PART 3 - EXECUTION

3.1 INSTALLATION

Work shall be performed in accordance with the manufacturer's published diagrams, recommendations, and equipment warranty requirements. Where equipment is specified to conform to the requirements of ASME BPV VIII Div 1 and ASME BPV IX, the design, fabrication, and installation of the system shall conform to ASME BPV VIII Div 1 and ASME BPV IX.

3.1.1 Equipment

Refrigeration equipment and the installation thereof shall conform to ASHRAE 15. Necessary supports shall be provided for all equipment, appurtenances, and pipe as required, including frames or supports for compressors, pumps, cooling towers, condensers, and similar items. Compressors shall be isolated from the building structure. If mechanical vibration isolators are not provided, vibration absorbing foundations shall be provided. Each foundation shall include isolation units consisting of machine and floor or foundation fastenings, together with intermediate isolation material. In lieu of concrete pad foundation, concrete pedestal block with isolators placed between the pedestal block and the floor may be provided. Concrete pedestal block

shall be of mass not less than three times the combined pump, motor, and base weights. Isolators shall be selected and sized based on load-bearing requirements and the lowest frequency of vibration to be isolated. Lines connected to pumps mounted on pedestal blocks shall be provided with flexible connectors. Foundation drawings, bolt-setting information, and foundation bolts shall be furnished prior to concrete foundation construction for all equipment indicated or required to have concrete foundations. Equipment shall be properly leveled, aligned, and secured in place in accordance with manufacturer's instructions.

3.1.1.1 Fire-Rated Penetrations

Penetration of fire-rated walls, partitions, and floors shall be sealed as specified in Section 07270 - FIRESTOPPING.

3.1.1.2 Escutcheons

Finished surfaces where exposed piping, bare or insulated, pass through floors, walls, or ceilings, except in boiler, utility, or equipment rooms, shall be provided with escutcheons. Where sleeves project slightly from floors, special deep-type escutcheons shall be used. Escutcheon shall be secured to pipe or pipe covering.

3.1.2 Access Panels

Access panels shall be provided for all concealed valves vents, controls, and items requiring inspection or maintenance. Access panels shall be of sufficient size and located so that the concealed items may be serviced and maintained or completely removed and replaced. Access panels shall be as specified in Section 05500 - MISCELLANEOUS METALS.

3.1.3 Framed Instructions

Framed instructions shall be framed under glass or laminated plastic and be posted where directed. Instructions shall include equipment layout, wiring and control diagrams, piping, valves and control sequences, and typed condensed operation instructions. The condensed operation instructions shall include preventative maintenance procedures, methods of checking the system for normal and safe operation, and procedures for safely starting and stopping the system. The instructions shall be posted before acceptance testing of the system.

3.2 TESTS

Tests shall be conducted in the presence of the Contracting Officer. Utilities for testing shall be provided as specified in the SPECIAL CONTRACT REQUIREMENTS. Water and electricity required for the tests will be furnished by the Government. Any material, equipment, instruments, and personnel required for the test shall be provided by the Contractor. The services of a qualified technician shall be provided as required to perform all tests and procedures indicated herein. Field tests shall be coordinated with Section 15990 - TESTING, ADJUSTING, AND BALANCING OF HVAC SYSTEMS.

3.3 CLEANING AND ADJUSTING

3.3.1 Equipment

Equipment shall be wiped clean, with all traces of oil, dust, dirt, or paint spots removed. System shall be maintained in this clean condition until final acceptance. Bearings shall be lubricated with oil or grease as recommended by the manufacturer. Belts shall be tightened to proper tension. Control valves and other miscellaneous equipment requiring adjustment shall be adjusted to setting indicated or directed.

3.3.2 Testing, Adjusting, and Balancing

Testing, adjusting, and balancing shall be as specified in Section 15990 - TESTING, ADJUSTING AND BALANCING OF HVAC SYSTEMS.

- - o 0 o - -

SECTION 15895

AIR SUPPLY, DISTRIBUTION, VENTILATION, AND EXHAUST SYSTEM

PART 1 - GENERAL

1.1 REFERENCES

The publications listed below form a part of this specification to the extent referenced. The publications are referred to in the text by basic designation only.

AIR MOVEMENT AND CONTROL ASSOCIATION (AMCA)

AMCA 210	(1985) Laboratory Methods of Testing Fans for Rating
AMCA 300	(1996) Reverberant Room Method for Sound Testing of Fans

AMERICAN BEARING MANUFACTURERS ASSOCIATION (ABEMA)

ABEMA 9	(1990) Load Ratings and Fatigue Life for Ball Bearings
ABEMA 11	(1990) Load Ratings and Fatigue Life for Roller Bearings

AMERICAN NATIONAL STANDARDS INSTITUTE (ANSI)

ANSI S12.32	(1990) Precision Methods for the Determination of Sound Power Levels of Discrete-Frequency and Narrow-Band Noise Sources in Reverberation Rooms

AMERICAN SOCIETY FOR TESTING AND MATERIALS (ASTM)

ASTM C 916	(1985; R 1990) Adhesives for Duct Thermal Insulation
ASTM C 1071	(1991) Thermal and Acoustical Insulation (Glass Fiber, Duct Lining Material)
ASTM D 3359	(1995) Measuring Adhesion by Tape Test
ASTM E 84	(1994) Surface Burning Characteristics of Building Materials
ASTM E 437	(1992) Industrial Wire Cloth and Screens (Square Opening Series)

AMERICAN SOCIETY OF HEATING, REFRIGERATING AND AIR-CONDITIONING ENGINEERS (ASHRAE)

ASHRAE 52.1	(1992) Gravimetric and Dust-Spot Procedures for Testing Air-Cleaning Devices Used in General Ventilation for Removing Particulate Matter
ASHRAE 68	(1986) Laboratory Method of Testing In-Duct Sound Power Measurement Procedures for Fans
ASHRAE 70	(1991) Method of Testing Rating the Performance of Air Outlets and Inlets

COMMERCIAL ITEM DESCRIPTIONS (CID)

CID A-A-1419	(Rev D) Filter Element, Air Conditioning (Viscous-Impingement and Dry Types, Replaceable)

NATIONAL FIRE PROTECTION ASSOCIATION (NFPA)

NFPA 70	(1996) National Electrical Code
NFPA 90A	(1993) Installation of Air Conditioning and Ventilating Systems

SHEET METAL AND AIR CONDITIONING CONTRACTORS' NATIONAL ASSOCIATION (SMACNA)

SMACNA-01	(1975) Accepted Industry Practice for Industrial Duct Construction
SMACNA-05	(1992) Fire, Smoke and Radiation Damper Installation Guide for HVAC Systems
SMACNA-06	(1995) HVAC Duct Construction Standards - Metal and Flexible
SMACNA-10	(1985) HVAC Air Duct Leakage Test Manual

UNDERWRITERS LABORATORIES (UL)

UL-05	(1996; Supple) Fire Resistance Directory (3 Vol.)
UL 181	(1996; Rev Oct 1996) Factory-Made Air Ducts and Air Connectors
UL 555	(1995) Fire Dampers
UL 705	(1994; Rev thru Mar 1996) Power Ventilators
UL 723	(1993; Rev Apr 1994) Test for Surface Burning Characteristics of Building Materials
UL 900	(1994) Test Performance of Air Filter Units
UL 1995	(1995) Heating and Cooling Equipment

1.2 COORDINATION OF TRADES

Ductwork, piping offsets, fittings, and accessories shall be furnished as required to provide a complete installation and to eliminate interference with other construction.

1.3 DELIVERY AND STORAGE

Equipment delivered and placed in storage shall be stored with protection from the weather, humidity and temperature variations, dirt and dust, or other contaminants.

1.4 SUBMITTALS

Government approval is required for submittals with a "GA" designation; submittals having an "FIO" designation are for information only. The following shall be submitted in accordance with Section 01330 - SUBMITTAL PROCEDURES:

SD-01 Data

Components and Equipment Data; FIO.

Manufacturer's catalog data shall be included with the detail drawings for the following items. The data shall be highlighted to show model, size, options, etc., that are intended for consideration. Data shall be adequate to demonstrate compliance with contract requirements for the following:

a. Piping Components

b. Ductwork Components

c. Air Systems Equipment

d. Air Handling Units

SD-04 Drawings

Air Supply, Distribution, Ventilation, and Exhaust Equipment; FIO.

Drawings shall consist of equipment layout including assembly and installation details and electrical connection diagrams; ductwork layout showing the location of all supports and hangers, typical hanger details, gauge reinforcement, reinforcement spacing rigidity classification, and static pressure and seal classifications; and piping layout showing the location of all guides and anchors, the load imposed on each support or anchor, and typical support details. Drawings shall include any information required to demonstrate that the system has been coordinated and will properly function as a unit and shall show equipment relationship to other parts of the work, including clearances required for operation and maintenance.

SD-06 Instructions

Test Procedures; FIO.

Proposed test procedures for piping hydrostatic test, ductwork leak test, and performance tests of systems, at least 2 weeks prior to the start of related testing.

Welding Procedures; FIO.

A copy of qualified welding procedures, at least 2 weeks prior to the start of welding operations.

System Diagrams; GA.

Proposed diagrams, at least 2 weeks prior to start of related testing. System diagrams that show the layout of equipment, piping, and ductwork, and typed condensed operation manuals explaining preventative maintenance procedures, methods of checking the system for normal, safe operation, and procedures for safely starting and stopping the system shall be framed under glass or laminated plastic. After approval, these items shall be posted where directed.

SD-19 Operation and Maintenance Manuals

Air Supply, Distribution, Ventilation, and Exhaust Manuals; GA.

Six manuals listing step-by-step procedures required for system startup, operation, shutdown, and routine maintenance, at least 2 weeks prior to field training. The manuals shall include the manufacturer's name, model number, parts list, list of parts and tools that should be kept in stock by the owner for routine maintenance including the name of a local supplier, simplified wiring and controls diagrams, troubleshooting guide, and recommended service organization (including address and telephone number) for each item of equipment. Each service organization submitted shall be capable of providing 4 hour onsite response to a service call on an emergency basis.

PART 2 - PRODUCTS

2.1 STANDARD PRODUCTS

Components and equipment shall be standard products of a manufacturer regularly engaged in the manufacturing of products that are of a similar material, design and workmanship. The standard products shall have been in satisfactory commercial or industrial use for 2 years before bid opening. The 2-year experience shall include applications of components and equipment under similar circumstances and of similar size. The 2 years must be satisfactorily completed by a product which has been sold or is offered for sale on the commercial market through advertisements, manufacturers' catalogs, or brochures. Products having less than a 2-year field service record will be acceptable if a certified record of satisfactory field operation, for not less than 6000 hours exclusive of the manufacturer's factory tests, can be shown. The equipment items shall be supported by a service organization.

2.2 ASBESTOS PROHIBITION

Asbestos and asbestos-containing products shall not be used.

2.3 NAMEPLATES

Equipment shall have a nameplate that identifies the manufacturer's name, address, type or style, model or serial number, and catalog number.

2.4 EQUIPMENT GUARDS AND ACCESS

Belts, pulleys, chains, gears, couplings, projecting setscrews, keys, and other rotating parts exposed to personnel contact shall be fully enclosed or guarded according to OSHA requirements. High temperature equipment and piping exposed to contact by personnel or where it creates a potential fire hazard shall be properly guarded or covered with insulation of a type specified.

2.5 ELECTRICAL WORK

Electrical motor-driven equipment specified shall be provided complete with motor, motor starter, and controls. Unless otherwise specified, electric equipment, including wiring and motor efficiencies, shall be according to Section 16415 - ELECTRICAL WORK, INTERIOR. Electrical characteristics and enclosure type shall be as shown. Unless otherwise indicated, motors of 1 hp and above shall be high efficiency type. Motor starters shall be provided complete with thermal overload protection and other appurtenances necessary. Each motor shall be according to NEMA MG 1 and shall be of sufficient size to drive the equipment at the specified capacity without exceeding the nameplate rating of the motor. Manual or automatic control and protective or signal devices required for the operation specified, and any control wiring required for controls and devices, but not shown, shall be provided. Where two-speed or variable-speed motors are indicated, solid-state variable-speed controller may be provided to accomplish the same function. Solid-state variable-speed controllers shall be utilized for motors rated 10 hp or less. Adjustable frequency drives shall be used for larger motors.

2.6 DUCTWORK COMPONENTS

2.6.1 Metal Ductwork

All aspects of metal ductwork construction, including all fittings and components, shall comply with SMACNA-06 unless otherwise specified. Elbows shall be radius type with a centerline radius of 1-1/2 times the width or diameter of the duct where space permits. Otherwise, elbows having a minimum radius equal to the width or diameter of the duct or square elbows with factory fabricated turning vanes may be used. Static pressure Class 1/2, 1, and 2 inch w.g. ductwork shall meet the requirements of Seal Class C. Class 3 through 10 inch shall meet the requirements of Seal Class A. Sealants shall conform to fire hazard classification specified in Section 15250 - THERMAL INSULATION FOR MECHANICAL SYSTEMS. Pressure sensitive tape shall not be used as a sealant. Spiral lock seam duct, and flat oval shall be made with duct sealant and locked with not less than 3 equally spaced drive screws or other approved methods indicated in SMACNA-06. The sealant shall be applied to the exposed male part of the fitting collar so that the sealer will be on the inside of the joint and fully protected by the metal of the duct fitting. One brush coat of the sealant shall be applied over the outside of the joint to at least 2 inch band width covering all screw heads and joint gap. Dents in the male portion of the slip fitting collar will not be acceptable. Outdoor air

intake ducts and plenums shall be fabricated with watertight soldered or brazed joints and seams.

2.6.1.1 Transitions

Diverging air flow transitions shall be made with each side pitched out a maximum of 15 degrees, for an included angle of 30 degrees. Transitions for converging air flow shall be made with each side pitched in a maximum of 30 degrees, for an included angle of 60 degrees, or shall be as indicated. Factory-fabricated reducing fittings for systems using round duct sections when formed to the shape of the ASME short flow nozzle, need not comply with the maximum angles specified.

2.6.1.2 Insulated Nonmetallic Flexible Duct Runouts

Flexible duct runouts shall be used only where indicated. Runout length shall be as shown on the drawings, but shall in no case exceed 5 feet. Runouts shall be preinsulated, factory fabricated, and shall comply with NFPA 90A and UL 181. Either field or factory applied vapor barrier shall be provided. Where coil induction or high velocity units are supplied with vertical air inlets, a streamlined and vaned and mitered elbow transition piece shall be provided for connection to the flexible duct or hose. The last elbow to these units, other than the vertical air inlet type, shall be a die-stamped elbow and not a flexible connector. Insulated flexible connectors may be used as runouts. The insulated material and vapor barrier shall conform to the requirements of Section 15250 - THERMAL INSULATION FOR MECHANICAL SYSTEMS. The insulation material surface shall not be exposed to the air stream.

2.6.1.3 General Service Duct Connectors

A flexible duct connector approximately 6 inches in width shall be provided where sheet metal connections are made to fans or where ducts of dissimilar metals are connected. For round/oval ducts, the flexible material shall be secured by stainless steel or zinc-coated, iron clinch-type draw bands. For rectangular ducts, the flexible material locked to metal collars shall be installed using normal duct construction methods. The composite connector system shall comply with UL 214 and be classified as "flame-retarded fabrics" in UL-01.

2.6.2 Ductwork Accessories

2.6.2.1 Duct Access Doors

Access doors shall be provided in ductwork and plenums where indicated and at all air flow measuring primaries, automatic dampers, fire dampers, coils, thermostats, and other apparatus requiring service and inspection in the duct system, and unless otherwise shown, shall conform to SMACNA-06. Access doors shall be provided upstream and downstream of air flow measuring primaries and heating and cooling coils. Doors shall be minimum 15 x 18 inches, unless otherwise shown. Where duct size will not accommodate this size door, the doors shall be made as large as practicable. Doors 24 x 24 inches or larger shall be provided with fasteners operable from both sides. Doors in insulated ducts shall be the insulated type.

2.6.2.2 Splitters and Manual Balancing Dampers

Splitters and manual balancing dampers shall be furnished with accessible operating mechanisms. Where operators occur in finished portions of the building, operators shall be chromium plated with all exposed edges rounded. Manual volume control dampers shall be operated by locking-type quadrant operators. Dampers and splitters shall be 2 gauges heavier than the duct in which installed. Unless otherwise indicated, multileaf dampers shall be opposed blade type with maximum blade width of 12 inches. Access doors or panels shall be provided for all concealed damper operators and locking setscrews. Unless otherwise indicated, the locking-type quadrant operators for dampers, when installed on ducts to be thermally insulated, shall be provided with stand-off mounting brackets, bases, or adapters to provide clearance between the duct surface and the operator not less than the thickness of the insulation. Stand-off mounting items shall be integral with the operator or standard accessory of the damper manufacturer. Volume dampers shall be provided where indicated.

2.6.2.3 Air Deflectors and Branch Connections

Air deflectors shall be provided at duct mounted supply outlets, at takeoff or extension collars to supply outlets, at duct branch takeoff connections, and at 90 degree elbows, as well as at locations as indicated on the drawings or otherwise specified. Conical branch connections or 45 degree entry connections may be used in lieu of deflectors or extractors for branch connections. All air deflectors, except those installed in 90 degree elbows, shall be provided with an approved means of adjustment. Adjustment shall be made from easily accessible means inside the duct or from an adjustment with sturdy lock on the face of the duct. When installed on ducts to be thermally insulated, external adjustments shall be provided with stand-off mounting brackets, integral with the adjustment device, to provide clearance between the duct surface and the adjustment device not less than the thickness of the thermal insulation. Air deflectors shall be factory-fabricated units consisting of curved turning vanes or louver blades designed to provide uniform air distribution and change of direction with minimum turbulence or pressure loss. Air deflectors shall be factory or field assembled. Blade air deflectors, also called blade air extractors, shall be approved factory fabricated units consisting of equalizing grid and adjustable blade and lock. Adjustment shall be easily made from the face of the diffuser or by position adjustment and lock external to the duct. Stand-off brackets shall be provided on insulated ducts and are described herein. Fixed air deflectors, also called turning vanes, shall be provided in 90 degree elbows.

2.6.3 Duct Sleeves, Framed Prepared Openings, Closure Collars

2.6.3.1 Duct Sleeves

Duct sleeves shall be provided for round ducts 15 inches in diameter or less passing through floors, walls, ceilings, or roof, and installed during construction of the floor, wall, ceiling, or roof. Round ducts larger than 15 inches in diameter and square, rectangular, and oval ducts passing through floors, walls, ceilings, or roof shall be installed through framed prepared openings. The Contractor shall be responsible for the proper size and location of sleeves and prepared openings. Sleeves and framed openings are

also required where grilles, registers, and diffusers are installed at the openings. Framed prepared openings shall be fabricated from 20 gauge galvanized steel, unless otherwise indicated. Where sleeves are installed in bearing walls or partitions, black steel pipe, ASTM A 53, Schedule 20 shall be used. Sleeve shall provide 1 inch clearance between the duct and the sleeve or 1 inch clearance between the insulation and the sleeve for insulated ducts.

2.6.3.2 Framed Prepared Openings

Openings shall have 1 inch clearance between the duct and the opening or 1 inch clearance between the insulation and the opening for insulated ducts.

2.6.3.3 Closure Collars

Collars shall be fabricated of galvanized sheet metal not less than 4 inches wide, unless otherwise indicated, and shall be installed on exposed ducts on each side of walls or floors where sleeves or prepared openings are provided. Collars shall be installed tight against surfaces. Collars shall fit snugly around the duct or insulation. Sharp edges of the collar around insulated duct shall be ground smooth to preclude tearing or puncturing the insulation covering or vapor barrier. Collars for round ducts 15 inches in diameter or less shall be fabricated from 20 gauge galvanized steel. Collars for round ducts larger than 15 inches and square, and rectangular ducts shall be fabricated from 18 gauge galvanized steel. Collars shall be installed with fasteners on maximum 6 inch centers, except that not less than 4 fasteners shall be used.

2.6.4 Sound Attenuation Equipment

a. Acoustical Duct Liner:

Acoustical duct lining shall be fibrous glass designed exclusively for lining ductwork and shall conform to the requirements of ASTM C 1071, Type I and II. Liner composition may be uniform density, graduated density, or dual density, as standard with the manufacturer. Lining shall be coated, not less than 1 inch thick. Where acoustical duct liner is used, liner or combination of liner and insulation applied to the exterior of the ductwork shall be the thermal equivalent of the insulation specified in Section 15250 - THERMAL INSULATION FOR MECHANICAL SYSTEMS. Duct sizes shown shall be increased to compensate for the thickness of the lining used. In lieu of sheet metal duct with field-applied acoustical lining, acoustically equivalent lengths of fibrous glass duct or factory fabricated double-walled internally insulated duct with perforated liner may be provided. Net insertion loss value, static pressure drop, and air flow velocity capacity data shall be certified by a nationally recognized independent acoustical laboratory.

2.6.5 Diffusers, Registers, and Grilles

Units shall be factory-fabricated of steel and shall distribute the specified quantity of air evenly over space intended without causing noticeable drafts, air movement faster than 50 fpm in occupied zone, or dead spots anywhere in the conditioned area. Outlets for diffusion, spread, throw, and noise level shall be as required for specified performance. Performance shall be certified according to ASHRAE 70. Inlets and outlets shall be sound rated and

certified according to ASHRAE 70. Sound power level shall be as indicated. Diffusers and registers shall be provided with volume damper with accessible operator, unless otherwise indicated; or if standard with the manufacturer, an automatically controlled device will be acceptable. Volume dampers shall be opposed blade type for all diffusers and registers, except linear slot diffusers. Linear slot diffusers shall be provided with round or elliptical balancing dampers.

2.6.5.1 Diffusers

Diffuser types shall be as indicated. Ceiling mounted units shall be furnished with anti-smudge devices, unless the diffuser unit minimizes ceiling smudging through design features. Diffusers shall be provided with air deflectors of the type indicated. Air handling troffers or combination light and ceiling diffusers shall conform to the requirements of UL-03 for the interchangeable use as cooled or heated air supply diffusers or return air units. Ceiling mounted units shall be installed with rims tight against ceiling. Sponge rubber gaskets shall be provided between ceiling and surface mounted diffusers for air leakage control. Suitable trim shall be provided for flush mounted diffusers. Duct collar connecting the duct to diffuser shall be airtight and shall not interfere with volume controller. Return or exhaust units shall be similar to supply diffusers.

2.6.5.2 Registers and Grilles

Units shall be four-way directional-control type, except that return and exhaust registers may be fixed horizontal or vertical louver type similar in appearance to the supply register face. Registers shall be provided with sponge-rubber gasket between flanges and wall or ceiling. Wall supply registers shall be installed at least 6 inches below the ceiling unless otherwise indicated. Return and exhaust registers shall be located 6 inches above the floor unless otherwise indicated. Four-way directional control may be achieved by a grille face which can be rotated in 4 positions or by adjustment of horizontal and vertical vanes. Grilles shall be as specified for registers, without volume control damper.

2.6.6 Air Vents, Penthouses, and Goosenecks

Air vents, penthouses, and goosenecks shall be fabricated from galvanized steel sheets with galvanized structural shapes. Sheet metal thickness, reinforcement, and fabrication shall conform to SMACNA-06. Louver blades shall be accurately fitted and secured to frames. Edges of louver blades shall be folded or beaded for rigidity and baffled to exclude driving rain. Air vents, penthouses, and goosenecks shall be provided with bird screen.

2.6.7 Bird Screens and Frames

Bird screens shall conform to ASTM E 437, Type I, Class 1, 2 by 2 mesh, 0.063 inch diameter aluminum wire or 0.031 inch diameter stainless steel wire. Frames shall be removable type or stainless steel or extruded aluminum.

2.7 AIR SYSTEMS EQUIPMENT

2.7.1 Fans

Fans shall be tested and rated according to AMCA 210. Fans may be connected to the motors either directly or indirectly with V-belt drive. V-belt drives shall be designed for not less than 150 percent of the connected driving capacity. Motor sheaves shall be variable pitch for 15 hp and below and fixed pitch as defined by ARI Guideline D. Variable pitch sheaves shall be selected to drive the fan at a speed which will produce the specified capacity when set at the approximate midpoint of the sheave adjustment. When fixed pitch sheaves are furnished, a replaceable sheave shall be provided when needed to achieve system air balance. Motors for V-belt drives shall be provided with adjustable rails or bases. Removable metal guards shall be provided for all exposed V-belt drives, and speed-test openings shall be provided at the center of all rotating shafts. Fans shall be provided with personnel screens or guards on both suction and supply ends, except that the screens need not be provided, unless otherwise indicated, where ducts are connected to the fan. Fan and motor assemblies shall be provided with vibration-isolation supports or mountings as indicated. Vibration-isolation units shall be standard products with published loading ratings. Each fan shall be selected to produce the capacity required at the fan static pressure indicated. Sound power level shall be as indicated. The sound power level values shall be obtained according to AMCA 300. Standard AMCA arrangement, rotation, and discharge shall be as indicated.

2.7.1.1 Centrifugal Type Power Roof Ventilators

Fans shall be direct or V-belt driven with backward inclined, non-overloading wheel. Motor compartment housing shall be hinged or removable and weatherproof, constructed of heavy gauge aluminum. Fans shall be provided with birdscreen, disconnect switch, gravity dampers, roof curb, and extended base. Motors enclosure shall be dripproof type. Grease-laden kitchen exhaust fans shall be centrifugal type according to UL 705 and fitted with V-belt drive, round hood, and windband upblast discharge configuration, integral residue trough and collection device, motor and power transmission components located in outside positively air ventilated compartment. Lubricated bearings shall be provided.

2.7.1.2 Ceiling Exhaust Fans

Suspended cabinet-type ceiling exhaust fans shall be centrifugal type, direct-driven. Fans shall have acoustically insulated housing. Integral backdraft damper shall be chatter-proof. The integral face grille shall be of egg-crate design or louver design. Fan motors shall be mounted on vibration isolators. Unit shall be provided with mounting flange for hanging unit from above. Fans shall be U.L. listed.

2.7.2 Air Filters

Air filters shall be listed according to requirements of UL 900, except high efficiency particulate air filters of 99.97 percent efficiency by the DOP Test

method shall be as listed under the Label Service and shall meet the requirements of UL 586.

2.7.2.1 Replaceable Media Filters

Replaceable media filters shall be the dry-media type, of the size required to suit the application. Filtering media shall be not less than 2 inches thick fibrous glass media pad supported by a structural wire grid or woven wire mesh. Pad shall be enclosed in a holding frame of not less than 16 gauge galvanized steel, and equipped with quick-opening mechanism for changing filter media. The air flow capacity of the filter shall be based on net filter face velocity not exceeding 300 feet per minute, with initial resistance of 0.15 inches water gauge. Average efficiency shall be not less than 30 percent when tested according to ASHRAE 52.1.

2.8 FACTORY PAINTING

Units which are not of galvanized construction according to ASTM A 123 or ASTM A 924 shall be factory painted with a corrosion resisting paint finish. Internal and external ferrous metal surfaces shall be cleaned, phosphatised and coated with a paint finish which has been tested according to ASTM B 117, ASTM D 1654, and ASTM D 3359. Evidence of satisfactory paint performance for a minimum of 125 hours for units to be installed indoors and 500 hours for units to be installed outdoors shall be submitted. Rating of failure at the scribe mark shall be not less than 6, average creepage not greater than 1/8 inch. Rating of the inscribed area shall not be less than 10, no failure. On units constructed of galvanized steel which have been welded, exterior surfaces of welds or welds that have burned through from the interior shall receive a final shop docket of zinc-rich protective paint according to ASTM D 520 Type I.

PART 3 - EXECUTION

3.1 INSTALLATION

Work shall be installed as shown and according to the manufacturer's diagrams and recommendations.

3.1.1 Condensate Drain Lines

Water seals shall be provided in the condensate drain from all units. The depth of each seal shall be 2 inches plus the number of inches, measured in water gauge, of the total static pressure rating of the unit to which the drain is connected. Water seals shall be constructed of 2 tees and an appropriate U-bend with the open end of each tee plugged. Pipe cap or plug cleanouts shall be provided where indicated. Drains indicated to connect to the sanitary waste system shall be connected by an indirect waste fitting. Air conditioner drain lines shall be insulated as specified in Section 15250 - THERMAL INSULATION FOR MECHANICAL SYSTEMS.

3.1.2 Equipment and Installation

Frames and supports shall be provided for tanks, compressors, pumps, valves, air handling units, fans, coils, dampers, and other similar items requiring

supports. Air handling units shall be floor mounted or ceiling hung, as indicated. The method of anchoring and fastening shall be as detailed. Floor-mounted equipment, unless otherwise indicated, shall be set on not less than 6 inch concrete pads or curbs doweled in place. Concrete foundations for circulating pumps shall be heavy enough to minimize the intensity of the vibrations transmitted to the piping and the surrounding structure, as recommended in writing by the pump manufacturer. In lieu of a concrete pad foundation, a concrete pedestal block with isolators placed between the pedestal block and the floor may be provided. The concrete foundation or concrete pedestal block shall be of a mass not less than three times the weight of the components to be supported. Lines connected to the pump mounted on pedestal blocks shall be provided with flexible connectors. Foundation drawings, bolt-setting information, and foundation bolts shall be furnished prior to concrete foundation construction for all equipment indicated or required to have concrete foundations.

3.1.3 Access Panels

Access panels shall be provided for concealed valves, vents, controls, dampers, and items requiring inspection or maintenance. Access panels shall be of sufficient size and located so that the concealed items may be serviced and maintained or completely removed and replaced.

3.1.4 Flexible Connectors

Pre-insulated flexible connectors and flexible duct shall be attached to other components in accordance with the latest printed instructions of the manufacturer to ensure a vapor tight joint. Hangers, when required to suspend the connectors, shall be of the type recommended by the connector or duct manufacturer and shall be provided at the intervals recommended.

3.1.5 Sleeved and Framed Openings

Space between the sleeved or framed opening and the duct or the duct insulation shall be packed as specified in Section 07270 - FIRESTOPPING for fire rated penetrations. For non-fire rated penetrations, the space shall be packed as specified in Section 07920A - CAULKING AND SEALANTS.

3.1.6 Metal Ductwork

Installation shall be according to SMACNA-06 unless otherwise indicated. Duct supports for sheet metal ductwork shall be according to SMACNA-06, unless otherwise specified. Friction beam clamps indicated in SMACNA-06 shall not be used. Risers on high velocity ducts shall be anchored in the center of the vertical run to allow ends of riser to move due to thermal expansion. Supports on the risers shall allow free vertical movement of the duct. Supports shall be attached only to structural framing members and concrete slabs. Supports shall not be anchored to metal decking unless a means is provided and approved for preventing the anchor from puncturing the metal decking. Where supports are required between structural framing members, suitable intermediate metal framing shall be provided. Where C-clamps are used, retainer clips shall be provided.

3.1.7 Acoustical Duct Lining

Lining shall be applied in cut-to-size pieces attached to the interior of the duct with nonflammable fire resistant adhesive conforming to ASTM C 916, Type I, NFPA 90A, UL 723, and ASTM E 84. Top and bottom pieces shall lap the side pieces and shall be secured with welded pins, adhered clips of metal, nylon, or high impact plastic, and speed washers or welding cup-head pins installed according to SMACNA-06. Welded pins, cup-head pins, or adhered clips shall not distort the duct, burn through, nor mar the finish or the surface of the duct. Pins and washers shall be flush with the surfaces of the duct liner and all breaks and punctures of the duct liner coating shall be sealed with the nonflammable, fire resistant adhesive. Exposed edges of the liner at the duct ends and at other joints where the lining will be subject to erosion shall be coated with a heavy brush coat of the nonflammable, fire resistant adhesive, to prevent delamination of glass fibers. Duct liner may be applied to flat sheet metal prior to forming duct through the sheet metal brake. Lining at the top and bottom surfaces of the duct shall be additionally secured by welded pins or adhered clips as specified for cut-to-size pieces. Other methods indicated in SMACNA-06 to obtain proper installation of duct liners in sheet metal ducts, including adhesives and fasteners, will be acceptable.

3.1.8 Dust Control

To prevent the accumulation of dust, debris and foreign material during construction, temporary dust control protection shall be provided. The distribution system (supply and return) shall be protected with temporary seal-offs at all inlets and outlets at the end of each day's work. Temporary protection shall remain in place until system is ready for startup.

3.1.9 Insulation

Thickness and application of insulation materials for ductwork, piping, and equipment shall be according to Section 15250 - THERMAL INSULATION FOR MECHANICAL SYSTEMS. Outdoor air intake ducts and plenums shall be externally insulated up to the point where the outdoor air mixes with the outside air stream.

3.1.10 Duct Test Holes

Holes with closures or threaded holes with plugs shall be provided in ducts and plenums as indicated or where necessary for the use of pitot tube in balancing the air system. Extensions, complete with cap or plug, shall be provided where the ducts are insulated.

3.1.11 Power Roof Ventilator Mounting

Foamed 1/2 inch thick, closed-cell, flexible elastomer insulation shall cover width of roof curb mounting flange. Where wood nailers are used, holes shall be pre-drilled for fasteners.

3.1.12 Power Transmission Components Adjustment

V-belts and sheaves shall be tested for proper alignment and tension prior to operation and after 72 hours of operation at final speed. Belts on drive side shall be uniformly loaded, not bouncing. Alignment of direct driven couplings shall be to within 50 percent of manufacturer's maximum allowable range of misalignment.

3.2 FIELD PAINTING AND PIPING IDENTIFICATION

Finish painting of items only primed at the factory or surfaces not specifically noted otherwise and identification for piping are specified in Section 09900 - PAINTING, GENERAL.

3.3 CLEANING AND ADJUSTING

Pipes shall be cleaned free of scale and thoroughly flushed of foreign matter. A temporary bypass shall be provided for water coils to prevent flushing water from passing through coils. Strainers and valves shall be thoroughly cleaned. Prior to testing and balancing, air shall be removed from water systems by operating the air vents. Temporary measures, such as piping the overflow from vents to a collecting vessel shall be taken to avoid water damage during the venting process. Air vents shall be plugged or capped after the system has been vented. Inside of ducts, plenums, and casing shall be thoroughly cleaned of debris and blown free of small particles of rubbish and dust and then shall be vacuum cleaned before installing outlet faces. Equipment shall be wiped clean, with traces of oil, dust, dirt, or paint spots removed. Temporary filters shall be provided prior to startup of all fans that are operated during construction, and new filters shall be installed after all construction dirt has been removed from the building, and the ducts, plenums, casings, and other items specified have been vacuum cleaned. System shall be maintained in this clean condition until final acceptance. Bearings shall be properly lubricated with oil or grease as recommended by the manufacturer. Belts shall be tightened to proper tension. Control valves and other miscellaneous equipment requiring adjustment shall be adjusted to setting indicated or directed. Fans shall be adjusted to the speed indicated by the manufacturer to meet specified conditions.

3.4 TESTING, ADJUSTING, AND BALANCING

Testing, adjusting, and balancing shall be as specified in Section 15990 - TESTING, ADJUSTING AND BALANCING OF HVAC SYSTEMS. Testing, adjusting, and balancing shall begin only when the air supply and distribution, including controls, has been completed, with the exception of performance tests.

3.5 PERFORMANCE TESTS

After testing, adjusting, and balancing has been completed as specified, each system shall be tested as a whole to see that all items perform as integral parts of the system and temperatures and conditions are evenly controlled throughout the building. Corrections and adjustments shall be made as necessary to produce the conditions indicated or specified. Capacity tests and general operating tests shall be conducted by an experienced engineer. Tests shall cover a period of not less than 1/2 days for each system and shall

demonstrate that the entire system is functioning according to the specifications. Coincidental chart recordings shall be made at points indicated on the drawings for the duration of the time period and shall record the temperature at space thermostats or space sensors, the humidity at space humidistats or space sensors and the ambient temperature and humidity in a shaded and weather protected area.

3.6 FIELD TRAINING

The Contractor shall conduct a training course for operating and maintenance personnel as designated by the Contracting Officer. Training shall be provided for a period of 4 hours of normal working time and shall start after the system is functionally complete but prior to the performance tests. The field instruction shall cover all of the items contained in the approved Operating and Maintenance Instructions.

- - o 0 o - -

SECTION 15990

TESTING, ADJUSTING AND BALANCING OF HVAC SYSTEMS

PART 1 - GENERAL

1.1 REFERENCES

The publications listed below form a part of this specification to the extent referenced. The publications are referred to in the text by basic designation only.

AMERICAN NATIONAL STANDARDS INSTITUTE (ANSI)

ANSI S1.4	(1983; S1.4A) Sound Level Meters
ANSI S1.11	(1986; R 1993) Octave-Band and Fractional-Octave-Band Analog and Digital Filters

AMERICAN SOCIETY OF HEATING, REFRIGERATING AND AIR CONDITIONING ENGINEERS (ASHRAE)

ASHRAE 111	(1988) Practices for Measurement, Testing, Adjusting, and Balancing of Building Heating, Ventilation, Air-Conditioning and Refrigeration Systems

ASSOCIATED AIR BALANCE COUNCIL (AABC)

AABC MN-1	(1989) National Standards for Testing and Balancing Heating, Ventilating, and Air Conditioning Systems

NATIONAL ENVIRONMENTAL BALANCING BUREAU (NEBB)

NEBB-01	(1991) Procedural Standards for Testing Adjusting Balancing of Environmental Systems

NATIONAL FIRE PROTECTION ASSOCIATION (NFPA)

NFPA 90A	(1993) Installation of Air Conditioning and Ventilating Systems

SHEET METAL & AIR CONDITIONING CONTRACTORS' NATIONAL ASSOCIATION (SMACNA)

SMACNA-07	(1993) HVAC Systems - Testing, Adjusting and Balancing

1.2 GENERAL REQUIREMENTS

The Contractor shall select AABC MN-1, NEBB-01, SMACNA-07 or ASHRAE 111 as the standard for providing testing, adjusting and balancing of air and water systems. The selected standard shall be used throughout the project. Testing, adjusting, and balancing shall be accomplished by a firm certified for testing and balancing by Associated Air Balance Council (AABC) or National Environmental Balancing Bureau (NEBB). Prior to testing, adjusting, and balancing, the Contractor shall verify that the systems have been installed and are operating as specified. Approved detail drawings and all other data required for each system and/or component to be tested shall be made available at the jobsite during the entire testing, adjusting and balancing effort. The Contractor shall verify that all balancing devices are properly installed to permit testing, adjusting and balancing and that all duct leakage tests have been completed prior to testing, adjusting and balancing. The Contracting Officer shall be notified in writing of all equipment, components, or balancing devices, that are damaged, incorrectly installed, or missing, as well as any design deficiencies that will prevent proper testing, adjusting, and balancing. Testing, adjusting, and balancing shall not commence until approved by the Contracting Officer. Instrumentation accuracy shall be in accordance with the standard selected in this paragraph.

1.3 INSTRUMENT ACCURACY REQUIREMENTS

All instrumentation shall be checked for accuracy before beginning testing, adjusting and balancing procedures. Instrument accuracy shall be in accordance with the standard selected in paragraph GENERAL REQUIREMENTS. Checks may be carried out against similar equipment maintained specifically for checking purposes or by the manufacturer or a recognized testing facility. All instrumentation used for testing shall be calibrated within 6 months of use. Pitot tubes and U-tube manometers do not require checking. In no case shall the instrumentation accuracy be less than specified by the instrument manufacturer. Any instrument falling out of calibration during the process of balancing and testing shall be recalibrated or removed from the site and replaced by a properly calibrated instrument. No instruments shall be allowed to remain on-site that are not in calibration.

1.4 SUBMITTALS

Government approval is required for submittals with a "GA" designation; submittals having an "FIO" designation are for information only. The following shall be submitted in accordance with Section 01330 - SUBMITTAL PROCEDURES:

SD-09 Reports

Testing and Balancing; FIO.

Three copies of a preliminary report, 30 days before balancing commences. The report shall be organized by specific systems and shall clearly identify each item of equipment to be tested, adjusted, and balanced. The appropriate test procedures and measurements to be taken for each item of equipment shall be listed. Instrument calibration records shall be provided on forms shown in AABC MN-1 or SMACNA-07. Manufacturer's specified accuracy shall be shown.

The report shall include floor plans showing all measurement locations and types of measurements to be made. All related data necessary for testing, balancing, and adjusting, including fan curves and pump curves, shall be included. A system readiness checklist, similar to that shown in SMACNA-07, shall be included. The report shall contain a listing of the deficiencies of all systems to be tested, adjusted and balanced and the corrective action taken. The report shall contain a schedule for the testing and balancing. Six copies of the final report on forms shown in AABC MN-1 or SMACNA-07, 30 days after completion of the test and balance operation. Data shall be in a hard bound cover identifying the project name, location, date of submittal, name of Contractor, and a general title indicating the specific area and type of work, and shall be signed by a registered professional engineer, employed by the test and balance firm, who has a minimum of 2 years experience in testing, adjusting and balancing work. The final report shall include a summary describing test methods, test results, and major corrective actions taken. The report shall include as-tested floor plans showing all measurement locations and types of measurements made. The air handling unit data shall include a static pressure profile diagram, and pitot tube traverses where possible. Air distribution data shall include coded drawings which show the exact location of each air outlet.

All instruments that are recalibrated and brought back onto the jobsite after being found to be out of calibration shall have recalibration records submitted on forms shown in AABC MN-1 or SMACNA-07.

SD-13 Certificates

Qualification; FIO.

Qualification data, 90 days prior to testing and balancing operations. The test and balance firm shall be certified by the Associated Air Balance Council (AABC) or the National Environmental Balancing Bureau (NEBB). The lead balancing technician shall be qualified by AABC or NEBB and his qualification data shall include past experience on at least five similar projects.

PART 2 - PRODUCTS (Not Applicable)

PART 3 - EXECUTION

3.1 TESTING AND BALANCING

3.1.1 General

The facility shall be essentially complete with final ceiling, walls, windows, doors and partitions in place. Doors and windows surrounding each area to be balanced shall be closed during testing and balancing operations. Air systems shall be complete and operable with balancing dampers, ducting, diffusers, returns, flow control boxes and control components in place. Exhaust fans and fume hoods shall be operational. Hydronic systems shall be complete and operable with balancing valves, flow meters, coils, pumps, piping and control components in place. All measurements and adjustments shall be made using procedures described in standard selected in paragraph GENERAL REQUIREMENTS. Air motion and distribution from air terminals shall be as shown. Smoke tests may be used to demonstrate proper air distribution from air terminals. All

data including deficiencies encountered and corrective action taken shall be recorded. If a system cannot be adjusted to meet the design requirements, the Contractor shall promptly notify the Contracting Officer in writing.

3.1.2 Air Systems

Clean filters shall be installed at the beginning of the testing, adjusting, and balancing effort. Each system shall be adjusted until all flow quantities are within plus ten percent and minus zero percent. Dampers shall be checked for tight shutoff. Air leakage around dampers shall be verified. Fans shall be checked for correct direction of rotation and proper speed shall be verified. Fire and smoke dampers shall be tested at system design air flow to ensure proper closure in accordance with NFPA 90A and manufacturer's instructions prior to building occupancy.

3.1.2.1 General Balancing Methods

In addition to the requirements for specific systems, flows in supply, exhaust and return air systems shall be balanced using the methods in standard selected in paragraph GENERAL REQUIREMENTS. Throttling losses shall be limited. Air flow adjustments shall be made by first adjusting the fan speed to meet the design flow conditions. Fan speed adjustment may not be required for fan motors which are less than one horsepower, or if throttling results in no greater than an additional 1/3 horsepower draw above that required if the fan speed were adjusted. Flows and pressures shall be checked in all main risers and supply ducts at all supply, exhaust and return fan discharges. All flows shall be recorded before and after each adjustment.

3.1.2.2 Specific Systems

All special or additional procedures for testing and balancing shall be in accordance with the applicable requirements of the standard selected in paragraph GENERAL REQUIREMENTS. If a system has diversity, only the required quantity of wide open terminals shall be used to meet the design air flow.

3.1.3 Marking of Setting

Following final acceptance of certified reports by the Contracting Officer, the setting of all HVAC adjustment devices including valves, splitters, and dampers shall be permanently marked by the testing and balancing engineer so that adjustment can be restored if disturbed at any time.

3.1.4 Marking of Test Ports

The testing and balancing engineer shall permanently and legibly mark and identify the location points of the duct test ports. If the ductwork has exterior insulation, these markings shall be made on the exterior side of the ductwork insulation. All penetrations through ductwork and ductwork insulation shall be properly sealed to prevent air leakage or loss of vapor barrier.

3.1.5 Sound Level Testing

After the systems are properly tested, adjusted and balanced, sound levels shall be checked in accordance with the applicable provisions of AABC MN-1. Octave-band analysis and noise-criteria curve data shall be recorded on forms shown in AABC MN-1. All occupied areas including offices, corridors, auditorium and meeting rooms, and hospital rooms shall be verified to be within the sound levels shown or as specified. Any areas not meeting the requirements of AABC MN-1 or the specifications or drawings shall be clearly indicated on the form and an explanation of all discrepancies shall be provided in test report.

3.2 CONTROL SYSTEMS

Testing, adjusting, and balancing of the systems shall be coordinated with the control system installation. All control components shall be verified to be properly installed and operating as specified before proceeding with testing, adjusting, and balancing. Verification shall be in accordance with AABC MN-1.

3.3 COMPLETION TIME FOR TESTING

If completion time for the building precludes performing these tests at or near design temperature and conditions, the tests will be considered as preliminary for acceptance of the building for beneficial use. The Contractor will be responsible for final testing and fine balancing of the heating and cooling system during the next heating and cooling season at a time when outside conditions are at or near design conditions. If weather conditions during the heating and cooling season do not approach design conditions, the final testing will be completed prior to 15 February for heating and 30 August for cooling following completion of the building.

- - o 0 o - -

SECTION 16415
ELECTRICAL WORK, INTERIOR

PART 1 - GENERAL

1.1 REFERENCES

The publications listed below form a part of this specification to the extent referenced. The publications are referred to in the text by basic designation only.

AMERICAN NATIONAL STANDARDS INSTITUTE (ANSI)

ANSI C12.1	(1995) Code for Electricity Metering
ANSI C12.4	(1984; R 1990) Mechanical Demand Registers
ANSI C12.10	(1987) Electromechanical Watthour Meters
ANSI C12.11	(1987; R 1993) Instrument Transformer for Revenue Metering, 10 kV BIL Through 350 kV BIL (0.6 kV NSV Through 69 kV NSV)
ANSI C37.16	(1988; C37.16a) Low-Voltage Power Circuit Breakers and AC Power Circuit Protectors - Preferred Ratings, Related Requirements, and Application Recommendations
ANSI C39.1	(1981; R 1992) Requirements forElectrical Analog Indicating Instruments
ANSI C57.12.10	(1988) Safety Requirements for Transformers 230 kV and Below 833/958 Through 8333/10417 kVA, Single-Phase, and 750/862 Through 60 000/80 000/100 000 kVA, Three-Phase Without Load Tap Changing; and 3750/4687 Through 60 000/80 000/100 000 kVA With Load Tap Changing
ANSI C57.12.13	(1982) Conformance Requirements for Liquid-Filled Transformers Used in Unit Installations, Including Unit Substations
ANSI C57.12.27	(1982) Conformance Requirements for Liquid-Filled Distribution Transformers Used in Pad-Mounted Installations, Including Unit Substations
ANSI C57.12.50	(1981; R 1989) Ventilated Dry-type Distribution Transformers 1 to 500 kVA, Single-Phase; and 15 to 500 kVA, Three-Phase with High-Voltage 601 to 34 500 Volts, Low-Voltage 120 to 600 Volts

ANSI C57.12.51	(1981; R 1989) Ventilated Dry-Type Power Transformers, 501 kVA and Larger, Three-Phase, with High-Voltage 601 to 34 500 Volts, Low-Voltage 208Y/120 to 4160 Volts
ANSI C57.12.52	(1981; R 1989) Sealed Dry-Type Power Transformers, 501 kVA and Larger, Three-Phase, with High-Voltage 601 to 34 500 Volts, Low-Voltage 208Y/120 to 4160 Volts
ANSI C57.12.70	(1978; R 1993) Terminal Markings and Connections for Distribution and Power Transformers
ANSI C80.5	(1990) Rigid Aluminum Conduit
ANSI C82.1	(1985; C82.1a; C82.1b; C82.1c; R 1992) Specifications for Fluorescent Lamp Ballasts
ANSI C82.4	(1992) Ballasts for High-Intensity-Discharge and Low-Pressure Sodium Lamps (Multiple-Supply Type)
ANSI C135.30	(1988) Zinc-Coated Ferrous Ground Rods for Overhead or Underground Line Construction

AMERICAN SOCIETY FOR TESTING AND MATERIALS (ASTM)

ASTM B 1	(1990) Hard-Drawn Copper Wire
ASTM B 8	(1993) Concentric-Lay-Stranded Copper Conductors, Hard, Medium-Hard, or Soft
ASTM D 709	(1992) Laminated Thermosetting Materials
ASTM D 4059	(1991) Analysis of Polychlorinated Biphenyls in Insulating Liquids by Gas Chromatography

CODE OF FEDERAL REGULATIONS (CFR)

47 CFR 18	Industrial, Scientific and Medical Equipment

INSTITUTE OF ELECTRICAL AND ELECTRONICS ENGINEERS (IEEE)

IEEE C2	(1997) National Electrical Safety Code
IEEE C37.13	(1990) Low-Voltage AC Power Circuit Breakers Used in Enclosures
IEEE C37.20.1	(1993) Metal-Enclosed Low-Voltage Power Circuit-Breaker Switchgear
IEEE C57.12.00	(1993) IEEE Standard General Requirements for Liquid-Immersed Distribution, Power, and Regulating Transformers

IEEE C57.12.80	(1978; R 1992) Terminology for Power and Distribution Transformers
IEEE C57.12.90	(1993) Test Code for Liquid-Immersed Distribution, Power, and Regulating Transformers and Guide for Short-Circuit Testing of Distribution and Power Transformers
IEEE C57.13	(1993) Instrument Transformers
IEEE C57.98	(1993) Guide for Transformer Impulse Tests
IEEE C57.100	(1986; R 1992) Test Procedure for Thermal Evaluation of Oil-Immersed Distribution Transformers
IEEE C62.41	(1991) Surge Voltages in Low-Voltage AC Power Circuits
IEEE Std 81	(1983) Guide for Measuring Earth Resistivity, Ground Impedance, and Earth Surface Potentials of a Ground System (Part 1)
IEEE Std 242	(1986; R 1991) Recommended Practice for Protection and Coordination of Industrial and Commercial Power Systems
IEEE Std 399	(1990) Recommended Practice for Power Systems Analysis

NATIONAL ELECTRICAL MANUFACTURERS ASSOCIATION (NEMA)

NEMA 250	(1991) Enclosures for Electrical Equipment (1000 Volts Maximum)
NEMA AB 1	(1993) Molded Case Circuit Breakers and Molded Case Switches
NEMA BU 1	(1994) Busways
NEMA FU 1	(1986) Low Voltage Cartridge Fuses
NEMA ICS 1	(1993) Industrial Controls and Systems
NEMA ICS 2	(1993) Industrial Control and Systems, Controllers, Contactors Overload Relays Rated not More Than 2,000 Volts AC or 750 DC
NEMA ICS 3	(1993) Industrial Systems
NEMA ICS 6	(1993) Industrial Control and Systems, Enclosures
NEMA LE 4	(1987) Recessed Luminaires, Ceiling Compatibility
NEMA MG 1	(1993; Rev 1) Motors and Generators

NEMA MG 10	(1994) Energy Management Guide for Selection and Use of Polyphase Motors
NEMA OS 1	(1989) Sheet-Steel Outlet Boxes, Device Boxes, Covers, and Box Supports
NEMA OS 2	(1986; Errata Aug 1986; R 1991) Nonmetallic Outlet Boxes, Device Boxes, Covers and Box Supports
NEMA PB 1	(1990) Panelboards
NEMA PB 2	(1989) Deadfront Distribution Switchboards
NEMA PE 5	(1985; R 1991) Utility Type Battery Chargers
NEMA RN 1	(1989) Polyvinyl-Chloride (PVC) Externally Coated Galvanized Rigid Steel Conduit and Intermediate Metal Conduit
NEMA SG 3	(1990) Low-Voltage Power Circuit Breakers
NEMA ST 20	(1992) Dry-Type Transformers for General Applications
NEMA TC 2	(1990) Electrical Polyvinyl Chloride (PVC) Tubing (EPT) and Conduit (EPC-40 and EPC-80)
NEMA TC 13	(1993) Electrical Nonmetallic Tubing (ENT)
NEMA VE 1	(1991) Metallic Cable Tray Systems
NEMA WD 1	(1983; R 1989) General Requirements for Wiring Devices
NEMA WD 6	(1988) Wiring Devices - Dimensional Requirements

NATIONAL FIRE PROTECTION ASSOCIATION (NFPA)

NFPA 70	(1996) National Electrical Code
NFPA 101	(1994) Safety to Life from Fire in Buildings and Structures

UNDERWRITERS LABORATORIES (UL)

UL-03	(1996) Electrical Construction Materials Directory
UL 1	(1993; Rev thru Jan 1995) Flexible Metal Conduit
UL 4	(1986; Rev thru Nov 1990) Armored Cable
UL 5	(1995) Surface Metal Raceways and Fittings
UL 6	(1993; Rev March 96) Rigid Metal Conduit

UL 20	(1995) General-Use Snap Switches
UL 44	(1991; Rev thru Jun 1996) Rubber-Insulated Wires and Cables
UL 50	(1995) Enclosures for Electrical Equipment
UL 67	(1993; Rev thru Dec 1993) Panelboards
UL 83	(1991; Rev thru Jun 1996)Thermoplastic-Insulated Wires and Cables
UL 98	(1994; R Oct 1995) Enclosed and Dead-Front Switches
UL 198B	(1995) Class H Fuses
UL 198C	(1986; Rev thru Jun 1993) High-Interrupting-Capacity Fuses, Current-Limiting Types
UL 198D	(1995) Class K Fuses
UL 198E	(1988; Rev Jul 1988) Class R Fuses
UL 198G	(1988; Rev May 1988) Fuses for Supplementary Overcurrent Protection
UL 198H	(1988; Rev thru Nov 1993) Class T Fuses
UL 198L	(1995; Rev May 1995) D-C Fuses for Industrial Use
UL 360	(1986; Rev thru Dec 1995) Liquid-Tight Flexible Steel Conduit
UL 467	(1993; Rev thru Aug 1996) Grounding and Bonding Equipment
UL 486A	(1991; Rev Oct 1991) Wire Connectors and Soldering Lugs for Use with Copper Conductors
UL 486B	(1991; Rev thru Oct 1996) Wire Connectors for Use with Aluminum Conductors
UL 486C	(1991; Rev thru Oct 1996) Splicing Wire Connectors
UL 486E	(1994; Rev Aug 95) Equipment Wiring Terminal for Use with Aluminum and/or Copper Conductors
UL 489	(1996) Molded-Case Circuit Breakers and Circuit-Breaker Enclosures
UL 498	(1991; Rev thru Oct 1995) Attachment Plugs and Receptacles
UL 506	(1994; Rev Jul 1994) Specialty Transformers

UL 508	(1993) Industrial Control Equipment
UL 510	(1994) Insulating Tape
UL 512	(1993; R Dec 1995) Fuseholders
UL 514A	(1991; Rev Jun 1996) Metallic Outlet Boxes
UL 514B	(1989; Rev thru Apr 1995) Fittings for Conduit and Outlet Boxes
UL 514C	(1988; Rev thru Jul 1996) Nonmetallic Outlet Boxes, Flush-Device Boxes, and Covers
UL 542	(1994) Lampholders, Starters, and Starter Holders for Fluorescent Lamps
UL 651	(1995) Schedule 40 and 80 Rigid PVC Conduit
UL 651A	(1995) Type EB and A Rigid PVC Conduit and HDPE Conduit
UL 674	(1994; Rev thru Jul 1996) Electric Motors and Generators for Use in Division 1 Hazardous (Classified) Locations
UL 698	(1995; Rev thru Jul 1996) Industrial Control Equipment for Use in Hazardous (Classified) Locations
UL 719	(1996) Nonmetallic-Sheathed Cables
UL 797	(1993; Rev May 1995) Electrical Metallic Tubing
UL 817	(1994; Rev thru May 1996) Cord Sets and Power-Supply Cords
UL 844	(1995; Rev thru Aug 1996) Electric Lighting Fixtures for Use in Hazardous (Classified) Locations
UL 845	(1995; Rev Feb 1996) Motor Control Centers
UL 854	(1996) Service-Entrance Cables
UL 857	(1994; Rev Oct 1994) Busways and Associated Fittings
UL 869A	(1993; Rev Apr 1994) Reference Standard for Service Equipment
UL 877	(1993; Rev Jul 1995) Circuit Breakers and Circuit-Breaker Enclosures for Use in Hazardous (Classified) Locations
UL 886	(1994; Rev thru Jul 1995) Outlet Boxes and Fittings for Use in Hazardous (Classified) Locations

UL 891	(1994; Rev thru Jan 1995) Dead-Front Switchboards
UL 924	(1995; Rev May 1995) Emergency Lighting and Power Equipment
UL 935	(1995; Rev Jun 1995) Fluorescent-Lamp Ballasts
UL 943	(1993; Rev thru Sep 1996)Ground-Fault Circuit Interrupters
UL 1004	(1994; Rev thru May 1996) Electric Motors
UL 1010	(1995; Rev thru Jul 1996)Receptacle-Plug Combinations for Use in Hazardous (Classified) Locations
UL 1022	(1994) Line Isolation Monitors
UL 1029	(1994; Rev Sep 1995) High-Intensity-Discharge Lamp Ballasts
UL 1047	(1995) Isolated Power Systems Equipment
UL 1236	(1994; Rev thru Apr 1996) Battery Chargers for Charging Engine-Starter Batteries
UL 1242	(1983; Rev thru Jul 1993) Intermediate Metal Conduit
UL 1449	(1985; Errata Apr 1986) Transient Voltage Surge Suppressors
UL 1564	(1993; Rev Apr 1994) Industrial Battery Chargers
UL 1569	(1995) Metal-Clad Cables
UL 1570	(1995) Fluorescent Lighting Fixtures
UL 1571	(1995; Rev thru Mar 95) Incandescent Lighting Fixtures
UL 1572	(1995; Rev thru Sep 96) High Intensity Discharge Lighting Fixtures
UL 1660	(1994) Liquid-Tight Flexible Nonmetallic Conduit

1.2 GENERAL

1.2.1 Rules

The installation shall conform to the requirements of NFPA 70 and NFPA 101, unless more stringent requirements are indicated herein or shown.

1.2.2 Coordination

The drawings indicate the extent and the general location and arrangement of equipment, conduit, and wiring. The Contractor shall become familiar with all details of the work and verify all dimensions in the field so that the outlets and equipment shall be properly located and readily accessible. Lighting fixtures, outlets, and other equipment and materials shall be located to avoid interference with mechanical or structural features; otherwise, lighting fixtures shall be symmetrically located according to the room arrangement when uniform illumination is required, or asymmetrically located to suit conditions fixed by design and shown. Raceways, junction and outlet boxes, and lighting fixtures shall not be supported from sheet metal roof decks. If any conflicts occur necessitating departures from the drawings, details of and reasons for departures shall be submitted and approved prior to implementing any change. The Contractor shall coordinate electrical work with the HVAC and electrical drawings and specifications and provide power related wiring.

1.2.3 Special Environments

1.2.3.1 Weatherproof Locations

Wiring, Fixtures, and equipment in designated locations shall conform to NFPA 70 requirements for installation in damp or wet locations.

1.2.3.2 Hazardous Locations

Wiring and equipment in locations indicated shall be of the classes, groups, divisions, and suitable for the operating temperature; as indicated.

1.2.3.3 Ducts, Plenums and Other Air-Handling Spaces

Wiring and equipment in ducts, plenums and other air-handling spaces shall be installed using materials and methods in conformance with NFPA 70 unless more stringent requirements are indicated in this specification or on the contract drawings.

1.2.4 Standard Products

Material and equipment shall be a standard product of a manufacturer regularly engaged in the manufacture of the product and shall essentially duplicate items that have been in satisfactory use for at least 2 years prior to bid opening.

1.2.5 NAMEPLATES

1.2.5.1 Identification Nameplates

Major items of electrical equipment and major components shall be permanently marked with an identification name to identify the equipment by type or function and specific unit number as indicated. Designation of motors shall coincide with their designation in the motor control center or panel. Unless otherwise specified, identification nameplates shall be made of laminated plastic in accordance with ASTM D 709 with black outer layers and a white core. Edges shall be chamfered. Plates shall be fastened with black-finished

round-head drive screws, except motors, or approved nonadhesive metal fasteners. When the nameplate is to be installed on an irregular-shaped object, the Contractor shall devise an approved support suitable for the application and ensure the proper installation of the supports and nameplates. In all instances, the nameplate shall be installed in a conspicuous location. At the option of the Contractor, the equipment manufacturer's standard embossed nameplate material with black paint-filled letters may be furnished in lieu of laminated plastic. The front of each panelboard, motor control center, switchgear, and switchboard shall have a nameplate to indicate the phase letter, corresponding color and arrangement of the phase conductors. The following equipment, as a minimum, shall be provided with identification nameplates:

Minimum 1/4 inch High Letters	Minimum 1/8 inch High Letters
Panelboards	Control Power Transformers
Starters	Control Devices
Safety Switches	Instrument Transformers
Motor Control Centers	
Transformers	
Equipment Enclosures	
Switchgear	
Switchboards	
Motors	

Each panel, section, or unit in motor control centers, switchgear or similar assemblies shall be provided with a nameplate in addition to nameplates listed above, which shall be provided for individual compartments in the respective assembly, including nameplates which identify "future," "spare," and "dedicated" or "equipped spaces."

1.2.5.2 Liquid-Filled Transformer Nameplates

Power transformers shall be provided with Nameplate C information in accordance with IEEE C57.12.00. Nameplates shall indicate percent impedance, voltage, kVA, frequency, number of phases, cooling class, insulation class, temperature rise, the number of gallons and composition of liquid-dielectric, and shall be permanently marked with a statement that the transformer dielectric to be supplied is non-polychlorinated biphenyl. For liquid filled transformers, the Contractor shall furnish manufacturer's certification for each transformer that the dielectric is non-PCB classified, with less than 2 ppm PCB content in accordance with paragraph LIQUID DIELECTRICS. Certifications shall be related to serial numbers on transformer nameplates. Transformer dielectric exceeding the 2ppm PCB content or transformers without certification will be considered as PCB insulated and will not be accepted.

1.2.6 As-Built Drawings

Following the project completion or turnover, within 30 days the Contractor shall furnish two sets of as-built drawings to the Contracting Officer.

1.3 SUBMITTALS

Government approval is required for submittals with a "GA" designation; submittals having an "FIO" designation are for information only. The following shall be submitted in accordance with Section 01330 - SUBMITTAL PROCEDURES:

SD-01 Data

Fault Current and Protective Device Coordination Study; FIO.

The study shall be submitted along with protective device equipment submittals. No time extensions or similar contract modifications will be granted for work arising out of the requirements for this study. Approval of protective devices proposed shall be based on recommendations of this study, The Government shall not be held responsible for any changes to equipment, device ratings, settings, or additional labor for installation of equipment or devices ordered and/or procured prior to approval of the study.

Manufacturer's Catalog; FIO.

Data composed of catalog cuts, brochures, circulars, specifications, product data, and printed information in sufficient detail and scope to verify compliance with the requirements of the contract documents.

Material, Equipment, and Fixture Lists; FIO.

A complete itemized listing of equipment and materials proposed for incorporation into the work. Each entry shall include an item number, the quantity of items proposed, and the name of the manufacturer of each item.

Installation Procedures; FIO.

Installation procedures for rotating equipment, transformers, switchgear, battery systems, voltage regulators, and grounding resistors. Procedures shall include diagrams, instructions, and precautions required to install, adjust, calibrate, and test devices and equipment.

SD-04 Drawings

Interior Electrical Equipment; FIO.

Detail drawings consisting of equipment drawings, illustrations, schedules, instructions, diagrams, and other information necessary to define the installation. Detail drawings shall show the rating of items and systems and how the components of an item and system are assembled, function together, and how they will be installed on the project. Data and drawings for component parts of an item or system shall be coordinated and submitted as a unit. Data and drawings shall be coordinated and included in a single submission. Multiple submissions for the same equipment or system are not acceptable except where prior approval has been obtained from the Contracting Officer. In such cases, a list of data to be submitted later shall be included with the first submission. Detail drawings shall show physical arrangement, construction details, connections, finishes, materials used in fabrication, provisions for conduit or busway entrance, access requirements for

installation and maintenance, physical size, electrical characteristics, foundation and support details, and equipment weight. Drawings shall be drawn to scale and/or dimensioned. Optional items shall be clearly identified as included or excluded. Detail drawings shall as a minimum include:

a. Transformers.

b. Switchgear.

c. Battery system including calculations for the battery and charger.

d. Voltage regulators.

e. Grounding resistors.

f. Motors and rotating machinery.

g. Motor control centers.

h. Busway systems.

i. Single line electrical diagrams including primary, metering, sensing and relaying, control wiring, and control logic.

j. Sway bracing for suspended luminaires.

Structural drawings showing the structural or physical features of major equipment items, components, assemblies, and structures, including foundations or other types of supports for equipment and conductors. These drawings shall include accurately scaled or dimensioned outline and arrangement or layout drawings to show the physical size of equipment and components and the relative arrangement and physical connection of related components. Weights of equipment, components and assemblies shall be provided when required to verify the adequacy of design and proposed construction of foundations or other types of supports. Dynamic forces shall be stated for switching devices when such forces must be considered in the design of support structures. The appropriate detail drawings shall show the provisions for leveling, anchoring, and connecting all items during installation, and shall include any recommendations made by the manufacturer.

Electrical drawings including single-line and three-line diagrams, and schematics or elementary diagrams of each electrical system; internal wiring and field connection diagrams of each electrical device when published by the manufacturer; wiring diagrams of cabinets, panels, units, or separate mountings; interconnection diagrams that show the wiring between separate components of assemblies; field connection diagrams that show the termination of wiring routed between separate items of equipment; internal wiring diagrams of equipment showing wiring as actually provided for this project. Field wiring connections shall be clearly identified.

If departures from the contract drawings are deemed necessary by the Contractor, complete details of such departures, including changes in related portions of the project and the reasons why, shall be submitted with the detail drawings. Approved departures shall be made at no additional cost to the Government.

As-Built Drawings; FIO.

The as-built drawings shall be a record of the construction as installed. The drawings shall include all the information shown on the contract drawings, deviations, modifications, and changes from the contract drawings, however minor. The as-built drawings shall be kept at the job site and updated daily. The as-built drawings shall be a full-sized set of prints marked to reflect all deviations, changes, and modifications. The as-built drawings shall be complete and show the location, size, dimensions, part identification, and other information. Additional sheets may be added. The as-built drawings shall be jointly inspected for accuracy and completeness by the Contractor's quality control representative and by the Contracting Officer prior to the submission of each monthly pay estimate. Upon completion of the work, the Contractor shall submit three full sized sets of the marked prints to the Contracting Officer for approval. If upon review, the as-built drawings are found to contain errors and/or omissions, they will be returned to the Contractor for correction. The Contractor shall correct and return the as-built drawings to the Contracting Officer for approval within ten calendar days from the time the drawings are returned to the Contractor.

SD-08 Statements

On-Site Test; GA.

A detailed description of the Contractor's proposed procedures for on-site tests.

SD-09 Reports

Factory Test Reports; GA.

Six copies of the information described below in 8 1/2 x 11 inch binders having a minimum of 5 rings from which material may readily be removed and replaced, including a separate section for each test. Sections shall be separated by heavy plastic dividers with tabs.

a. A list of equipment used, with calibration certifications.

b. A copy of measurements taken.

c. The dates of testing.

d. The equipment and values to be verified.

e. The conditions specified for the test.

f. The test results, signed and dated.

g. A description of adjustments made.

Field Test Plan; GA.

A detailed description of the Contractor's proposed procedures for on-site test submitted 45 days prior to testing the installed system. No field test will be performed until the test plan is approved. The test plan shall

consist of complete field test procedures including tests to be performed, test equipment required, and tolerance limits.

Field Test Reports; GA.

Six copies of the information described below in 8 1/2 x 11 inch binders having a minimum of 5 rings from which material may readily be removed and replaced, including a separate section for each test. Sections shall be separated by heavy plastic dividers with tabs.

a. A list of equipment used, with calibration certifications.

b. A copy of measurements taken.

c. The dates of testing.

d. The equipment and values to be verified.

e. The conditions specified for the test.

f. The test results, signed and dated.

g. A description of adjustments made.

h. Final position of controls and device settings.

SD-13 Certificates

Materials and Equipment; GA.

The label or listing of the Underwriters Laboratories, Inc., will be accepted as evidence that the materials or equipment conform to the applicable standards of that agency. In lieu of this label or listing, a statement from a nationally recognized, adequately equipped testing agency indicating that the items have been tested in accordance with required procedures and that the materials and equipment comply with all contract requirements will be accepted. However, materials and equipment installed in hazardous locations must bear the UL label unless the data submitted from other testing agency is specifically approved in writing by the Contracting Officer. Items which are required to be listed and labeled in accordance with Underwriters Laboratories must be affixed with a UL label that states that it is UL listed. No exceptions or waivers will be granted to this requirement. Materials and equipment will be approved based on the manufacturer's published data.

For other than equipment and materials specified to conform to UL publications, a manufacturer's statement indicating complete compliance with the applicable standard of the American Society for Testing and Materials, National Electrical Manufacturers Association, or other commercial standard, is acceptable.

1.4 WORKMANSHIP

Materials and equipment shall be installed in accordance with NFPA 70, recommendations of the manufacturer, and as shown.

PART 2 - PRODUCTS

Products shall conform to the respective publications and other requirements specified below. Materials and equipment not listed below shall be as specified elsewhere in this section. Items of the same classification shall be identical including equipment, assemblies, parts, and components.

2.1 CABLES AND WIRES

Conductors No. 8 AWG and larger diameter shall be stranded. Conductors No. 10 AWG and smaller diameter shall be solid, except that conductors for remote control, alarm, and signal circuits, classes 1, 2, and 3, shall be stranded unless specifically indicated otherwise. Conductor sizes and ampacities shown are based on copper, unless indicated otherwise. All conductors shall be copper.

2.1.1 Equipment Manufacturer Requirements

When manufacturer's equipment requires copper conductors at the terminations or requires copper conductors to be provided between components of equipment, provide copper conductors or splices, splice boxes, and other work required to meet manufacturer's requirements.

2.1.2 Insulation

Unless indicated otherwise, or required by NFPA 70, power and lighting wires shall be 600-volt, Type THWN, THHN, or THW conforming to UL 83 or RHW conforming to UL 44, except that grounding wire may be type TW conforming to UL 83; remote-control and signal circuits shall be Type TW, THW or TF, conforming to UL 83. Where lighting fixtures require 90-degree Centigrade (C) conductors, provide only conductors with 90-degree C insulation or better.

2.1.3 Bonding Conductors

ASTM B 1, solid bare copper wire for sizes No. 8 AWG and smaller diameter; ASTM B 8, Class B, stranded bare copper wire for sizes No. 6 AWG and larger diameter.

2.1.4 Service Entrance Cables

Service entrance (SE) and underground service entrance (USE) cables, UL 854.

2.1.5 Non-metallic Sheathed Cable

UL 719, type NM or NMC.

2.1.6 Cord Sets and Power-Supply Cords

UL 817.

2.2 CABLE TRAYS

NEMA VE 1 cable trays shall form a wireway system, and shall be of nominal 4 inch depth. Cable trays shall be constructed of zinc-coated steel. Trays

shall include splice and end plates, dropouts, and miscellaneous hardware. Edges, fittings, and hardware shall be finished free from burrs and sharp edges. Fittings shall have not less than the load-carrying ability of straight tray sections and shall have manufacturer's minimum standard radius. Radius of bends shall be 12 inches.

2.2.1 Ladder

Ladder-type cable trays shall be of nominal 24 inch width. Rung spacing shall be on 9 inch maximum centers.

2.2.2 Channel

Channel-type cable trays shall be 4 inch width. Trays shall be one-piece construction having slots spaced not more than 4-1/2 inches on centers.

2.2.3 Cantilever

Cantilever-type, center-hung cable trays may be provided at the Contractor's option in lieu of other cable tray types specified.

2.3 TRANSIENT VOLTAGE SURGE PROTECTION

Transient voltage surge suppressors shall be provided as indicated. Surge suppressors shall meet the requirements of IEEE C62.41 and be UL listed and labeled as having been tested in accordance with UL 1449. Surge suppressor ratings shall be for the operating voltage on the system indicated, 60 Hz; 3-phase; wire with ground. Fuses shall not be used as surge suppression.

2.4 CIRCUIT BREAKERS

2.4.1 MOLDED-CASE CIRCUIT BREAKERS

Molded-case circuit breakers shall conform to NEMA AB 1 and UL 489 and UL 877 for circuit breakers and circuit breaker enclosures located in hazardous (classified) locations. Circuit breakers may be installed in panelboards, switchboards, enclosures, motor control centers, or combination motor controllers.

2.4.1.1 Construction

Circuit breakers shall be suitable for mounting and operating in any position. Lug shall be listed for copper conductors only in accordance with UL 486E. Single-pole circuit breakers shall be full module size with not more than one pole per module. Multi-pole circuit breakers shall be of the common-trip type having a single operating handle such that an overload or short circuit on any one pole will result in all poles opening simultaneously. Sizes of 100 amperes or less may consist of single-pole breakers permanently factory assembled into a multi-pole unit having an internal, mechanical, nontamperable common-trip mechanism and external handle ties. All circuit breakers shall have a quick-make, quick-break overcenter toggle-type mechanism, and the handle mechanism shall be trip-free to prevent holding the contacts closed against a short-circuit or sustained overload. All circuit breaker handles

shall assume a position between "ON" and "OFF" when tripped automatically. All ratings shall be clearly visible.

2.4.1.2 Ratings

Voltage ratings shall be not less than the applicable circuit voltage. The interrupting rating of the circuit breakers shall be at least equal to the available short-circuit current at the line terminals of the circuit breaker and correspond to the UL listed integrated short-circuit current rating specified for the panelboards and switchboards. Molded-case circuit breakers shall have nominal voltage ratings, maximum continuous-current ratings, and maximum short-circuit interrupting ratings in accordance with NEMA AB 1. Ratings shall be coordinated with system X/R ratio.

2.4.1.3 Cascade System Ratings

Circuit breakers used in series combinations shall be in accordance with UL 489. Equipment, such as switchboards and panelboards, which house series-connected circuit breakers shall be clearly marked accordingly. Series combinations shall be listed in the UL Recognized Component Directory under "Circuit Breakers-Series Connected."

2.4.1.4 Thermal-Magnetic Trip Elements

Thermal magnetic circuit breakers shall be provided as shown. Automatic operation shall be obtained by means of thermal-magnetic tripping devices located in each pole providing inverse time delay and instantaneous circuit protection. The instantaneous magnetic trip shall be adjustable and accessible from the front of all circuit breakers on frame sizes above 200 amperes.

2.4.2 Solid-State Trip Elements

Solid-state circuit breakers shall be provided as shown. All electronics shall be self-contained and require no external relaying, power supply, or accessories. Printed circuit cards shall be treated to resist moisture absorption, fungus growth, and signal leakage. All electronics shall be housed in an enclosure which provides protection against arcs, magnetic interference, dust, and other contaminants. Solid-state sensing shall measure true RMS current with error less than one percent on systems with distortions through the 13th harmonic. Peak or average actuating devices are not acceptable. Current sensors shall be torodial construction, encased in a plastic housing filled with epoxy to protect against damage and moisture and shall be integrally mounted on the breaker. Where indicated on the drawings, circuit breaker frames shall be rated for 100 percent continuous duty. Circuit breakers shall have tripping features as shown on the drawings and as described below:

a. Long-time current pick-up, adjustable from 50 percent to 100 percent of continuous current rating.

b. Adjustable long-time delay.

c. Short-time current pick-up, adjustable from 1.5 to 9 times long-time current setting.

d. Adjustable short-time delay.

e. Instantaneous current pick-up, adjustable from 1.5 to 9 times long-time current setting.

f. Ground-fault pick-up, adjustable from 20 percent to 60 percent of sensor rating, but in no case greater than 1200 amperes. Sensing of ground-fault current at the main bonding jumper or ground strap shall not be permitted.

g. Adjustable ground-fault delay.

h. Trip indicators shall be provided.

2.4.3 SWD Circuit Breakers

Circuit breakers rated 15 amperes and intended to switch 277 volts or less fluorescent lighting loads shall be marked "SWD."

2.4.4 HACR Circuit Breakers

Circuit breakers 60 amperes or below, 240 volts, 1-pole or 2-pole, intended to protect multi-motor and combination-load installations involved in heating, air conditioning, and refrigerating equipment shall be marked "Listed HACR Type."

2.4.5 Low-Voltage Power

a. Construction:

Low-voltage power circuit breakers shall conform to IEEE C37.13, ANSI C37.16, and NEMA SG 3 and shall be three-pole, single-throw, stored energy, manually operated (unless indicated otherwise), with drawout mounting. Solid-state trip elements which require no external power connections shall be provided. Circuit breakers shall have an open/close contact position indicator, charged/discharged stored energy indicator, primary disconnect devices, and a mechanical interlock to prevent making or breaking contact of the primary disconnects when the circuit breaker is closed. Control voltage shall be as indicated. The circuit breaker enclosure shall be suitable for its intended location.

b. Ratings:

Voltage ratings shall be not less than the applicable circuit voltage. Circuit breakers shall be rated for 100 percent continuous duty and shall have trip current ratings and frame sizes as shown. Nominal voltage ratings, maximum continuous-current ratings, and maximum short-circuit interrupting ratings shall be in accordance with ANSI C37.16. Tripping features shall be as follows:

(1) Long-time current pick-up, adjustable from 50 percent to 100 percent of sensor current rating.

(2) Adjustable long-time delay.

(3) Short-time current pick-up, adjustable from 1.5 to 9 times long-time current setting.

(4) Adjustable short-time delay.

(5) Instantaneous current pick-up, adjustable from 1.5 to 9 times long-time current setting.

(6) Ground-fault pick-up, adjustable from 20 percent to 60 percent of sensor rating, but in no case greater than 1200 amperes. Sensing of ground-fault current at the main bonding jumper or ground strap shall not be permitted.

(7) Adjustable ground-fault delay.

(8) Trip indicators shall be provided.

2.4.6 Ground Fault Circuit Interrupters

UL 943. Breakers equipped with ground fault circuit interrupters shall have ground fault class, interrupting capacity, and voltage and current ratings as indicated.

2.5 MOTOR SHORT-CIRCUIT PROTECTOR (MSCP)

Motor short-circuit protectors shall conform to UL 508 and shall be provided as shown. Protectors shall be used only as part of a combination motor controller which provides coordinated motor branch-circuit overload and short-circuit protection, and shall be rated in accordance with the requirements of NFPA 70.

2.5.1 Construction

Motor short-circuit protector bodies shall be constructed of high temperature, dimensionally stable, long life, nonhygroscopic materials. Protectors shall fit special MSCP mounting clips and shall not be interchangeable with any commercially available fuses. Protectors shall have 100 percent one-way interchangeability within the A-Y letter designations. All ratings shall be clearly visible.

2.5.2 Ratings

Voltage ratings shall be not less than the applicable circuit voltage. Letter designations shall be A through Y for motor controller Sizes 0, 1, 2, 3, 4, and 5, with 100,000 amperes interrupting capacity rating. Letter designations shall correspond to controller sizes as follows:

CONTROLLER SIZE	MSCP DESIGNATIONS
NEMA O	A-N

NEMA 1	A-P
NEMA 2	A-S
NEMA 3	A-U
NEMA 4	A-W
NEMA 5	A-Y

2.6 CONDUIT AND TUBING

2.6.1 Electrical, Zinc-Coated Steel Metallic Tubing (EMT)

UL 797

2.6.2 Electrical Nonmetallic Tubing (ENT)

NEMA TC 13.

2.6.3 Electrical Plastic Tubing and Conduit

NEMA TC 2.

2.6.4 Flexible Conduit, Steel and Plastic

General-purpose type, UL 1; liquid tight, UL 360, and UL 1660.

2.6.5 Intermediate Metal Conduit

UL 1242.

2.6.6 PVC Coated Rigid Steel Conduit

NEMA RN 1.

2.6.7 Rigid Aluminum Conduit

ANSI C80.5 and UL 6.

2.6.8 Rigid Metal Conduit

UL 6.

2.6.9 Rigid Plastic

NEMA TC 2, UL 651 and UL 651A.

2.6.10 Surface Metal Electrical Raceways and Fittings

UL 5.

2.7 CONDUIT AND DEVICE BOXES AND FITTINGS

2.7.1 Boxes, Metallic Outlet

NEMA OS 1 and UL 514C.

2.7.2 Boxes, Nonmetallic, Outlet and Flush-Device Boxes and Covers

NEMA OS 2 and UL 514C.

2.7.3 Boxes, Outlet for Use in Hazardous (Classified) Locations

UL 886.

2.7.4 Boxes, Switch (Enclosed), Surface-Mounted

UL 98.

2.7.5 Fittings for Conduit and Outlet Boxes

UL 514B.

2.7.6 Fittings For Use in Hazardous (Classified) Locations

UL 886.

2.7.7 Fittings, PVC, for Use with Rigid PVC Conduit and Tubing

UL 514B.

2.8 CONDUIT COATINGS PLASTIC RESIN SYSTEM

NEMA RN 1, Type A-40.

2.9 CONNECTORS, WIRE PRESSURE

2.9.1 For Use With Copper Conductors

UL 486A.

2.9.2 For Use With Aluminum Conductors

UL 486B.

2.10 ELECTRICAL GROUNDING AND BONDING EQUIPMENT

UL 467.

2.10.1 Ground Rods

Ground rods shall be of copper-clad steel conforming to UL 467 not less than 5/8 inch] in diameter by 10 feet in length of the sectional type driven full length into the earth.

2.10.2 Ground Bus

The ground bus shall be bare conductor or flat copper in one piece, if practicable.

2.11 ENCLOSURES

NEMA ICS 6 or NEMA 250 or UL 698 for use in hazardous (classified) locations, unless otherwise specified.

2.11.1 Cabinets and Boxes

Cabinets and boxes with volume greater than 100 cubic inches shall be in accordance with UL 50, hot-dip, zinc-coated, if sheet steel.

2.11.2 Circuit Breaker Enclosures

UL 489.

2.11.3 Circuit Breaker Enclosures for Use in Hazardous (Classified) Locations

UL 877.

2.12 FIXTURES, LIGHTING AND FIXTURE ACCESSORIES/COMPONENTS

Standard Drawing 40-06-04 sheets referenced hereinafter and enclosed as an integral part of these specifications, additional fixtures shown on contract drawings, if any, and UL 844 for fixtures to be installed in hazardous (classified) locations. Fixtures, accessories and components, including ballasts, lampholders, lamps, starters and starter holders, shall conform to industry standards specified below.

2.12.1 Fixture, Auxiliary or Emergency

UL 924.

2.12.2 Incandescent Fixture

NEMA LE 4 for ceiling compatibility of recessed fixtures and UL 1571.

2.12.3 Fluorescent

a. Fixture: NEMA LE 4 for ceiling compatibility of recessed fixtures and UL 1570. Fixtures shall be plainly marked for proper lamp and ballast type to identify lamp diameter, wattage, color and start type. Marking shall be readily visible to service personnel, but not visible from normal viewing angles.

b. Ballasts:

(1) Magnetic ballast, energy-saving, high power factor, Class P, automatic-resetting Type, approved for the application by the Certified Ballast Manufacturers: ANSI C82.1 and UL 935. Two-lamp ballasts shall be used for each pair of lamps within a fixture or within continuous mounted fixtures. Single-lamp ballasts shall be used for individually mounted single-lamp fixtures and where an odd single-lamp fixture occurs at the end of a continuous group. Magnetic fluorescent lamp ballasts shall have a Ballast Efficacy Factor (BEF) not less than shown in the following table:

MAGNETIC FLUORESCENT BALLAST EFFICACY FACTORS

Design starting temperature above 4.4 degrees C with 60 Hz input frequency

NUMBER OF LAMPS	LAMP TYPE	NOMINAL OPERATIONAL INPUT VOLTAGE	MAX. LAMP OPERATING CURRENT	MIN. BALLAST EFFICACY FACTOR
1	1.219 m (4 ft) rapid start	120 or 277	less than 1000 m amp	1.805
2	1.219 m (4 ft) rapid start	120	less than 1000 m amp	1.060
2	1.219 m (4 ft) rapid start	277	less than 1000 m amp	1.050
2	2.438 m (8 ft)	120 - 277	less than 1000 m amp	0.570 slim-line
2	2.438 m (8 ft) high output,	120 - 277	less than 1000 m amp rapid start	0.390

* For ballasts not specifically designed for use with dimming controls

MAGNETIC FLUORESCENT BALLAST EFFICACY FACTORS

Design starting temperature above 40 degrees F with 60 Hz input frequency

NUMBER OF LAMPS	LAMP TYPE	NOMINAL OPERATIONAL INPUT VOLTAGE	MAX. LAMP OPERATING CURRENT	MIN. BALLAST EFFICACY FACTOR
1	4 ft rapid start	120 or 277	less than 1000 m amp	1.805
2	4 ft rapid start	120	less than 1000 m amp	1.060
2	4 ft rapid start	277	less than 1000 m amp	1.050
2	8 ft slim-line	120 - 277	less than 1000 m amp	0.570
2	8 ft high output, rapid start	120 - 277	less than 1000 m amp	0.390

* For ballasts not specifically designed for use with dimming controls

The BEF is calculated using the formula:

BEF = Ballast Factor, (in percent) / Power Input

Where Power Input = Total Wattage of Combined Lamps and Ballasts.

(2) Electronic Ballast. Electronic ballasts shall consist of a rectifier, high frequency inverter, and power control and regulation circuitry. The ballasts shall be UL listed, Class P, with a Class A sound rating and shall contain no PCBs. Ballasts shall meet 47 CFR 18 for electromagnetic interference and shall not interfere with the operation of other electrical equipment. Design shall withstand line transients per IEEE C62.41, Category A. Unless otherwise indicated, the minimum number of ballasts shall be used to serve each individual fixture, using one, two, three or four lamp ballasts. A single ballast may be used to serve multiple fixtures if they are continuous mounted, factory manufactured for that installation with an integral wireway, and are identically controlled.

(a) Light output regulation shall be +/- 10%.

(b) Voltage input regulation shall be +/- 10%.

(c) Lamp current crest factor shall be no more than 1.6.

(d) Ballast factor shall be not less than 85% nor more than 100%, unless otherwise indicated.

(e) A 60 Hz filter shall be provided. Flicker shall be no more than 10% with any lamp suitable for the ballast.

(f) Ballast case temperature shall not exceed 25 degree Celsius rise above 40 degree Celsius ambient, when tested in accordance with UL 935.

(g) Total harmonic distortion shall be in the range of 10-20%.

(h) Power factor shall not be less than 0.95.

(i) Ballasts shall operate at a frequency of 20 kHz or more.

(j) Operating filament voltage shall be 2.5 to 4.5 volts.

(k) Warranty. Three year full warranty including a $10 labor allowance.

(l) Ballast Efficacy Factor (BEF) shall be in accordance with the following table. Ballasts and lamps shall be matching rapid start or instant start as indicated on the following table. If 32W-F32-T8 lamps and ballasts are used, they must be either all rapid start or all instant start.

ELECTRONIC FLUORESCENT BALLAST EFFICACY FACTORS

LAMP TYPE	TYPE OF STARTER & LAMP	NOMINAL OPERATIONAL INPUT VOLTAGE	NUMBER OF LAMPS	MIN. BALLAST EFFICACY FACTOR
40W F40 T12	rapid start	120 or 277 V	1	2.3
			2	1.2
			3	0.8
			4	0.6
34W F40 T12	rapid start	120 or 277 V	1	2.6
			2	1.3
			3	1.0
			4	0.7
40W F40 T10	rapid start	120 or 277 V	1	2.2
			2	1.1
			3	0.8
32W F32 T8	rapid or instant start	120 or 277 V	1	2.4
			2	1.4
			3	1.0
			4	0.8

*For ballasts not specifically designed for use with dimming controls

The BEF is calculated using the formula:

BEF = Ballast Factor (in percent) / Power Input

Where Power Input = Total Wattage of Combined Lamps and Ballasts.

c. Lampholders, Starters, and Starter Holders: UL 542.

2.12.4 High-Intensity-Discharge

a. Fixture: NEMA LE 4 for ceiling compatibility of recessed fixtures and UL 1572.

b. Ballasts: ANSI C82.4 for multiple supply types and UL 1029.

2.13 LOW-VOLTAGE FUSES AND FUSEHOLDERS

2.13.1 Fuses, Low Voltage Cartridge Type

NEMA FU 1.

2.13.2 Fuses, High-Interrupting-Capacity, Current-Limiting Type

Fuses, Class G, J, L and CC shall be in accordance with UL 198C.

2.13.3 Fuses, Class K, High-Interrupting-Capacity Type

UL 198D.

2.13.4 Fuses, Class H

UL 198B.

2.13.5 Fuses, Class R

UL 198E.

2.13.6 Fuses, Class T

UL 198H.

2.13.7 Fuses for Supplementary Overcurrent Protection

UL 198G.

2.13.8 Fuses, D-C for Industrial Use

UL 198L.

2.13.9 Fuseholders

UL 512.

2.14 INSTRUMENTS, ELECTRICAL INDICATING

ANSI C39.1.

2.15 MOTORS, AC, FRACTIONAL AND INTEGRAL

Motors, ac, fractional and integral horsepower, 500 hp and smaller shall conform to NEMA MG 1 and UL 1004 for motors; NEMA MG 10 for energy management selection of polyphase motors; and UL 674 for use of motors in hazardous (classified) locations.

2.15.1 Rating

The horsepower rating of motors should be limited to no more than 125 percent of the maximum load being served unless a NEMA standard size does not fall within this range. In this case, the next larger NEMA standard motor size should be used.

2.15.2 Motor Efficiencies

All permanently wired polyphase motors of 1 hp or more shall meet the minimum full-load efficiencies as indicated in the following table, and as specified in this specification. Motors of 1 hp or more with open, drip proof or totally enclosed fan cooled enclosures shall be high efficiency type, unless otherwise indicated. Motors provided as an integral part of motor driven equipment are excluded from this requirement if a minimum seasonal or overall

efficiency requirement is indicated for that equipment by the provisions of another section.

Minimum Motor Efficiencies

HP	Std. Efficiency	High Efficiency
1	77.0	85.5
1.5	78.5	85.5
2	78.5	85.5
3	78.5	88.5
5	82.5	88.5
7.5	84.0	90.0
10	85.5	90.0
15	85.5	91.0
20	87.5	92.0
25	88.5	92.0
30	88.5	92.0
40	88.5	92.0
50	89.0	92.5
60	89.0	92.5
75	89.0	95.5
100	90.0	93.5
125	91.0	94.5
150	91.0	94.5
200	91.0	94.5
250	91.0	94.5
300	91.0	94.5
350	91.0	94.5
400	91.0	94.5
500	91.0	94.5

2.16 MOTOR CONTROLS AND MOTOR CONTROL CENTERS

2.16.1 General

NEMA ICS 1, NEMA ICS 2, NEMA ICS 3 and NEMA ICS 6, and UL 508 and UL 845. Panelboards supplying non-linear loads shall have neutrals sized for 200 percent of rated current.

2.16.2 Motor Starters

Combination starters shall be provided with circuit breakers.

2.16.3 Thermal-Overload Protection

Each motor of 1/8 hp or larger shall be provided with thermal-overload protection. Polyphase motors shall have overload protection in each ungrounded conductor. The overload-protection device shall be provided either integral with the motor or controller, or shall be mounted in a separate enclosure. Unless otherwise specified, the protective device shall be of the manually reset type. Single or double pole tumbler switches specifically designed for alternating-current operation only may be used as manual

controllers for single-phase motors having a current rating not in excess of 80 percent of the switch rating.

2.16.4 Low-Voltage Motor Overload Relays

2.16.4.1 General

Thermal overload relays shall conform to NEMA ICS 2 and UL 508. Overload protection shall be provided either integral with the motor or motor controller, and shall be rated in accordance with the requirements of NFPA 70. Standard units shall be used for motor starting times up to 7 seconds.

2.16.4.2 Construction

Manual reset type thermal relay shall be bimetallic construction. Automatic reset type thermal relays shall be bimetallic construction. Magnetic current relays shall consist of a contact mechanism and a dash pot mounted on a common frame.

2.16.4.3 Ratings

Voltage ratings shall be not less than the applicable circuit voltage. Trip current ratings shall be established by selection of the replaceable overload device and shall not be adjustable. Where the controller is remotely-located or difficult to reach, an automatic reset, non-compensated overload relay shall be provided. Manual reset overload relays shall be provided otherwise, and at all locations where automatic starting is provided. Where the motor is located in a constant ambient temperature, and the thermal device is located in an ambient temperature that regularly varies by more than minus 18 degrees F, an ambient temperature-compensated overload relay shall be provided.

2.16.5 Automatic Control Devices

2.16.5.1 Direct Control

Automatic control devices (such as thermostats, float or pressure switches) which control the starting and stopping of motors directly shall be designed for that purpose and have an adequate horsepowerrating.

2.16.5.2 Pilot-Relay Control

Where the automatic-control device does not have such a rating, a magnetic starter shall be used, with the automatic-control device actuating the pilot-control circuit.

2.16.5.3 Manual/Automatic Selection

a. Where combination manual and automatic control is specified and the automatic-control device operates the motor directly, a double-throw, three-position tumbler or rotary switch (marked MANUAL-OFF-AUTOMATIC) shall be provided for the manual control.

b. Where combination manual and automatic control is specified and the automatic-control device actuates the pilot control circuit of a magnetic starter, the magnetic starter shall be provided with a three-position selector

switch marked MANUAL-OFF-AUTOMATIC.

c. Connections to the selector switch shall be such that; only the normal automatic regulatory control devices will be bypassed when the switch is in the Manual position; all safety control devices, such as low-or high-pressure cutouts, high-temperature cutouts, and motor-overload protective devices, shall be connected in the motor-control circuit in both the Manual and the Automatic positions of the selector switch. Control circuit connections to any MANUAL-OFF-AUTOMATIC switch or to more than one automatic regulatory control device shall be made in accordance with wiring diagram approved by the Contracting Officer unless such diagram is included on the drawings. All controls shall be 120 volts or less unless otherwise indicated.

2.17 PANELBOARDS

Dead-front construction, NEMA PB 1 and UL 67.

2.18 RECEPTACLES

2.18.1 Heavy Duty Grade

NEMA WD 1. Devices shall conform to all requirements for heavy duty receptacles.

2.18.2 Standard Grade

UL 498.

2.18.3 Ground Fault Interrupters

UL 943, Class A or B.

2.18.4 Hazardous (Classified) Locations

UL 1010.

2.18.5 NEMA Standard Receptacle Configurations

NEMA WD 6.

a. Single and Duplex, 15-Ampere and 20-Ampere, 125 Volt
15-ampere, non-locking: NEMA type 5-15R, locking: NEMA type L5-15R, 20-ampere, non-locking: NEMA type 5-20R, locking: NEMA type L5-20R.

b. 15-Ampere, 250 Volt

Two-pole, 3-wire grounding, non-locking: NEMA type 6-15R, locking: NEMA type L6-15R. Three-pole, 4-wire grounding, non-locking: NEMA type 15-15R, locking: NEMA type L15-15R.

c. 20-Ampere, 250 Volt

Two-pole, 3-wire grounding, non-locking: NEMA type 6-20R, locking: NEMA type L6-20R. Three-pole, 4-wire grounding, non-locking: NEMA type 15-20R, locking: NEMA type L15-20R.

d. 30-Ampere, 125/250 Volt

Three-pole, 3-wire, non-locking: NEMA type 10-30R, locking: NEMA type L10-30R. Three-pole, 4-wire grounding, non-locking: NEMA type 14-30R, locking: NEMA type L14-30R.

e. 30-Ampere, 250 Volt

Two-pole, 3-wire grounding, non-locking: NEMA type 6-30R, locking: NEMA type L6-30R. Three-pole, 4-wire grounding, non-locking: NEMA type 15-30R, locking: NEMA type L15-30R.

f. 50-Ampere, 125/250 Volt

Three-pole, 3-wire: NEMA type 10-50R. Three-pole, 4-wire grounding: NEMA type 14-50R.

g. 50-Ampere, 250 Volt

Two-pole, 3-wire grounding: NEMA type 6-50R. Three-pole, 4-wire grounding: NEMA type 15-50R.

2.19 Service Entrance Equipment

UL 869A.

2.20 SPLICE, CONDUCTOR

UL 486C.

2.21 SNAP SWITCHES

UL 20.

2.22 TAPES

2.22.1 Plastic Tape

UL 510.

2.22.2 Rubber Tape

UL 510.

2.23 TRANSFORMERS

Single- and three-phase transformers shall have two windings per phase. Full-capacity standard NEMA taps shall be provided in the primary windings of

transformers unless otherwise indicated. Three-phase transformers shall be configured with delta-wye windings, except as indicated.

2.23.1 Transformers, Dry-Type

Transformers shall have 220 degrees C insulation system for transformers 15 kVA and greater, and shall have 180 degrees C insulation system for transformers rated 10 kVA and less, with temperature rise not exceeding 150 degrees C under full-rated load in maximum ambient temperature of 40 degrees C. Transformer of 150 degrees C temperature rise shall be capable of carrying continuously 100 percent of nameplate kVA without exceeding insulation rating.

a. 600 Volt or Less Primary:

NEMA ST 20, UL 506, general purpose, dry-type, self-cooled, ventilated. Provide transformers in NEMA 1 enclosure, unless indicated otherwise. Transformers shall be quiet type with maximum sound level at least 3 decibels less than NEMA standard level for transformer ratings indicated.

2.23.2 Liquid-Insulated Transformers

IEEE C57.12.00, ANSI C57.12.10, ANSI C57.12.13, ANSI C57.12.27, ANSI C57.12.70, IEEE C57.12.80, IEEE C57.12.90, IEEE C57.98, and IEEE C57.100. Transformers may be the mineral-oil insulated, silicone, or the high-molecular weight hydrocarbon (HMWH) type. Voltage and KVA ratings shall be as indicated. Pressure relief valves and relays required for safe operation in an interior location or vault shall be provided. Single kVA ratings shown are based on self-cooled operation. Temperature rise shall not exceed 55/65 degrees C under full load operation in an ambient temperature of 40 degrees C. Percent voltage impedance shall be manufacturer's standard, unless indicated otherwise. The basic impulse insulation level (BIL) rating shall be not less than 110 kV for the distribution voltage shown. Nameplates shall be provided in accordance with IEEE C57.12.00.

2.23.3 Average Sound Level

The average sound level in decibels (dB) of transformers shall not exceed the following dB level at 12 inches for the applicable kVA rating range listed unless otherwise indicated:

kVA Range	dB Sound Level
1-50	50
51-150	55
151-300	58
301-500	60
501-700	62
701-1000	64
1001-1500	65
1501 & above	70

2.24 ISOLATED POWER SYSTEM EQUIPMENT

UL 1047, with monitor UL 1022.

2.25 INSTRUMENT TRANSFORMERS

2.25.1 General

Instrument transformers shall comply with ANSI C12.11 and IEEE C57.13. Instrument transformers shall be configured for mounting in/on the device to which they are applied. Polarity marks on instrument transformers shall be visually evident and shown on drawings.

2.25.2 Current Transformers

Unless otherwise indicated, bar, wound, or window-type transformers are acceptable; and except for window-type units installed over insulated buses, transformers shall have a BIL rating consistent with the rated BIL of the associated switchgear or electric power apparatus bushings, buses or conductors. Current transformers shall have the indicated ratios. The continuous thermal-current rating factor shall be not less than 1.2. Other thermal and mechanical ratings of current transformer and their primary leads shall be coordinated with the design of the circuit breaker and shall be not less than the momentary rating of the associated circuit breaker. Circuit protectors shall be provided across secondary leads of the current transformers to prevent the accidental open-circuiting of the transformers while energized. Each terminal of each current transformer shall be connected to a short-circuiting terminal block in the circuit interrupting mechanism cabinet, power transformer terminal cabinet, and in the associated instrument and relay cabinets.

2.25.2.1 Current Transformers for kWH and Demand Metering (Low Voltage)

Current transformers shall conform to IEEE C57.13. Provide current transformers with a metering accuracy Class of 0.3, with a minimum RF as indicated, at 30 degrees C, with 600-volt insulation, and 10 kV BIL. Provide butyl-molded, window-type current transformers mounted in the current transformer cabinet.

2.26 WIRING DEVICES

NEMA WD 1 for wiring devices, and NEMA WD 6 for dimensional requirements of wiring devices.

2.27 Liquid-Dielectrics

Liquid dielectrics for transformers, capacitors, and other liquid-filled electrical equipment shall be non-polychlorinated biphenyl (PCB) mineral oil or less flammable liquid as specified. Nonflammable fluids shall not be used. Tetrachloroethylene (perchloroethylene) and 1, 2, 4 trichlorobenzene fluids shall be certified by the manufacturer as having less than 2 parts per million (ppm) PCB content. In lieu of the manufacturer's certification, the Contractor may submit a test sample of the dielectric in accordance with ASTM D 4059 at a testing facility approved by the Contracting Officer. Equipment with test results indicating PCB level exceeding \&2 ppm shall be replaced.

PART 3 - EXECUTION

3.1 GROUNDING

Grounding shall be in conformance with NFPA 70, the contract drawings, and the following specifications.

3.1.1 Ground Rods

The resistance to ground shall be measured using the fall-of-potential method described in IEEE Std 81. The maximum resistance of a driven ground shall not exceed 25 ohms under normally dry conditions. If this resistance cannot be obtained with a single rod, 2 additional rods not less than 6 feet on centers may be coupled and driven with the first rod. In high-ground-resistance, UL listed chemically charged ground rods may be used. If the resultant resistance exceeds 25 ohms measured not less than 48 hours after rainfall, the Contracting Officer shall be notified immediately. Connections below grade shall be fusion welded. Connections above grade shall be fusion welded or shall use UL 467 approved connectors.

3.1.2 Ground Bus

Ground bus shall be provided in the electrical equipment rooms as indicated. Noncurrent-carrying metal parts of electrical equipment shall be effectively grounded by bonding to the ground bus. The ground bus shall be bonded to both the entrance ground, and to a ground rod or rods as specified above. All below ground or sealed connections shall be thermoweld exothermic type connections. Above ground exposed connections and splices shall be of the brazed, welded, bolted, or pressure-connector type, except that pressure connectors or bolted connections shall be used for connections to removable equipment. For raised floor equipment rooms in computer and data processing centers, a minimum of 4, one at each corner, multiple grounding systems shall be furnished. Connections shall be bolted type in lieu of thermoweld, so they can be changed as required by additions and/or alterations.

3.1.3 Grounding Conductors

A green equipment grounding conductor, sized in accordance with NFPA 70 shall be provided, regardless of the type of conduit. Equipment grounding bars shall be provided in all panelboards. The equipment grounding conductor shall be carried back to the service entrance grounding connection or separately derived grounding connection. All equipment grounding conductors, including metallic raceway systems used as such, shall be bonded or joined together in each wiring box or equipment enclosure. Metallic raceways and grounding conductors shall be checked to assure that they are wired or bonded into a common junction. Metallic boxes and enclosures, if used, shall also be bonded to these grounding conductors by an approved means per NFPA 70. When boxes for receptacles, switches, or other utilization devices are installed, any designated grounding terminal on these devices shall also be bonded to the equipment grounding conductor junction with a short jumper.

3.2 WIRING METHODS

Wiring shall conform to NFPA 70, the contract drawings, and the following specifications. Unless otherwise indicated, wiring shall consist of insulated conductors installed in rigid zinc-coated steel conduit or electrical metallic tubing or intermediate metal conduit. Where cables and wires are installed in cable trays, they shall be of the type permitted by NFPA 70 for use in such applications. Wire fill in conduits shall be based on NFPA 70 for the type of conduit and wire insulations specified. Wire fill in conduits located in Class I or II hazardous areas shall be limited to 25 percent of the cross sectional area of the conduit.

3.2.1 Conduit and Tubing Systems

Conduit and tubing systems shall be installed as indicated. Conduit sizes shown are based on use of copper conductors with insulation types as described in paragraph WIRING METHODS. Minimum size of raceways shall be 1/2 inch. Only metal conduits will be permitted when conduits are required for shielding or other special purposes indicated, or when required by conformance to NFPA 70. Nonmetallic conduit and tubing may be used in damp, wet or corrosive locations when permitted by NFPA 70 and the conduit or tubing system is provided with appropriate boxes, covers, clamps, screws or other appropriate type of fittings. Electrical metallic tubing (EMT) may be installed only within buildings. EMT may be installed in concrete and grout in dry locations. EMT installed in concrete or grout shall be provided with concrete tight fittings. EMT shall not be installed in damp or wet locations, or the air space of exterior masonry cavity walls. Bushings, manufactured fittings or boxes providing equivalent means of protection shall be installed on the ends of all conduits and shall be of the insulating type, where required by NFPA 70. Only UL listed adapters shall be used to connect EMT to rigid metal conduit, cast boxes, and conduit bodies. Aluminum conduit may not be used unless specifically indicated otherwise. Nonaluminum sleeves shall be used where aluminum conduit passes through concrete floors and firewalls. Penetrations of above grade floor slabs, time-rated partitions and fire walls shall be firestopped in accordance with Section 07270 - FIRESTOPPING. Except as otherwise specified, IMC may be used as an option for rigid steel conduit in areas as permitted by NFPA 70. Raceways shall not be installed under the firepits of boilers and furnaces and shall be kept 6 inches away from parallel runs of flues, steam pipes and hot-water pipes. Raceways shall be concealed within finished walls, ceilings, and floors unless otherwise shown. Raceways crossing structural expansion joints or seismic joints shall be provided with suitable expansion fittings or other suitable means to compensate for the building expansion and contraction and to provide for continuity of grounding. Wiring installed in underfloor duct system or underfloor raceway system shall be suitable for installation in wet locations.

3.2.1.1 Pull Wires

A pull wire shall be inserted in each empty raceway in which wiring is to be installed if the raceway is more than 25 feet in length and contains more than the equivalent of two 90-degree bends. The pull wire shall be of No. 14 AWG zinc-coated steel, or of plastic having not less than 200 pounds per square inch tensile strength. Not less than 254 mm 10 inches of slack shall be left at each end of the pull wire.

3.2.1.2 Conduit Stub-Ups

Where conduits are to be stubbed up through concrete floors, a short elbow shall be installed below grade to transition from the horizontal run of conduit to a vertical run. A conduit coupling fitting, threaded on the inside shall be installed, to allow terminating the conduit flush with the finished floor. Wiring shall be extended in rigid threaded conduit to equipment, except that where required, flexible conduit may be used 6 inches above the floor. Empty or spare conduit stub-ups shall be plugged flush with the finished floor with a threaded, recessed plug.

3.2.1.3 Below Slab-on-Grade or in the Ground

Electrical wiring below slab-on-grade shall be protected by a conduit system. Conduit passing vertically through slabs-on-grade shall be rigid steel or IMC. Rigid steel or IMC conduits installed below slab-on-grade or in the earth shall be field wrapped with 0.010 inch thick pipe-wrapping plastic tape applied with a 50 percent overlay, or shall have a factory-applied polyvinyl chloride, plastic resin, or epoxy coating system.

3.2.1.4 Installing in Slabs Including Slabs on Grade

Conduit installed in slabs-on-grade shall be rigid steel or IMC. Conduits shall be installed as close to the middle of concrete slabs as practicable without disturbing the reinforcement. Outside diameter shall not exceed 1/3 of the slab thickness and conduits shall be spaced not closer than 3 diameters on centers except at cabinet locations where the slab thickness shall be increased as approved by the Contracting Officer. Where conduit is run parallel to reinforcing steel, the conduit shall be spaced a minimum of one conduit diameter away but not less than one inch from the reinforcing steel.

3.2.1.5 Changes in Direction of Runs

Changes in direction of runs shall be made with symmetrical bends or cast-metal fittings. Field-made bends and offsets shall be made with an approved hickey or conduit-bending machine. Crushed or deformed raceways shall not be installed. Trapped raceways in damp and wet locations shall be avoided where possible. Care shall be taken to prevent the lodgment of plaster, dirt, or trash in raceways, boxes, fittings and equipment during the course of construction. Clogged raceways shall be cleared of obstructions or shall be replaced.

3.2.1.6 Supports

Except where otherwise permitted by NFPA 70, conduits and tubing shall be securely and rigidly fastened in place at intervals of not more than 10 feet and within 3 feet of boxes, cabinets, and fittings, with approved pipe straps, wall brackets, conduit clamps, conduit hangers, threaded C-clamps, beam clamps, or ceiling trapeze. Loads and supports shall be coordinated with supporting structure to prevent damage or deformation to the structure. Loads shall not be applied to joist bridging. Attachment shall be by wood screws or screw-type nails to wood; by toggle bolts on hollow masonry units; by expansion bolts on concrete or brick; by machine screws, welded threaded studs, heat-treated or spring-steel-tension clamps on steel work. Nail-type

nylon anchors or threaded studs driven in by a powder charge and provided with lock washers and nuts may be used in lieu of expansion bolts or machine screws. Raceways or pipe straps shall not be welded to steel structures. Cutting the main reinforcing bars in reinforced concrete beams or joists shall be avoided when drilling holes for support anchors. Holes drilled for support anchors, but not used, shall be filled. In partitions of light steel construction, sheet-metal screws may be used. Raceways shall not be supported using wire or nylon ties. Raceways shall be independently supported from the structure. Upper raceways shall not be used as a means of support for lower raceways. Supporting means will not be shared between electrical raceways and mechanical piping or ducts. Cables and raceways shall not be supported by ceiling grids. Except where permitted by NFPA 70, wiring shall not be supported by ceiling support systems. Conduits shall be fastened to sheet-metal boxes and cabinets with two locknuts where required by NFPA 70, where insulating bushings are used, and where bushings cannot be brought into firm contact with the box; otherwise, a single locknut and bushing may be used. Threadless fittings for electrical metallic tubing shall be of a type approved for the conditions encountered. Additional support for horizontal runs is not required when EMT rests on steel stud cutouts.

3.2.1.7 Exposed Raceways

Exposed raceways shall be installed parallel or perpendicular to walls, structural members, or intersections of vertical planes and ceilings. Raceways under raised floors and above accessible ceilings shall be considered as exposed installations in accordance with NFPA 70 definitions.

3.2.1.8 Exposed Risers

Exposed risers in wire shafts of multistory buildings shall be supported by U-clamp hangers at each floor level, and at intervals not to exceed 10 feet.

3.2.1.9 Exposed Lengths of Conduit, Over 600 Volts

Exposed lengths of conduit containing power conductors operating at more than 600 volts shall have two red bands 2 inches wide spaced 8 inches apart painted near each coupling; the intervening space between the red bands shall be painted white, and on the white space the voltage shall be stenciled in black.

3.2.1.10 Communications Raceways

Communications raceways indicated shall be installed in accordance with the previous requirement for conduit and tubing and with the additional requirement that no length of run shall exceed 50 feet for 1/2 inch and 3/4 inch sizes, and 100 feet for 1 inch size or larger.

3.2.2 Cable Trays

Cable trays shall be supported in accordance with the recommendations of the manufacturer but at no more than 6 foot intervals. Contact surfaces of aluminum connections shall be coated with an antioxidant compound prior to assembly. Adjacent cable tray sections shall be bonded together by connector plates of an identical type as the cable tray sections. The Contractor shall submit the manufacturer's certification that the cable tray system meets all

requirements of Article 318 of NFPA 70. The cable tray shall be installed and grounded in accordance with the provisions of Article 318 of NFPA 70. Data submitted by the Contractor shall demonstrate that the completed cable tray systems will comply with the specified requirements. Cable trays shall terminate 10 inches from both sides of smoke and fire partitions. Conductors run through smoke and fire partitions shall be installed in 4 inch rigid steel conduits with grounding bushings, extending 12 inches beyond each side of the partitions. The installation shall be sealed to preserve the smoke and fire rating of the partitions.

3.2.3 Cables and Conductors

Installation shall conform to the requirements of NFPA 70. Covered, bare or insulated conductors of circuits rated over 600 volts shall not occupy the same equipment wiring enclosure, cable, or raceway with conductors of circuits rated 600 volts or less.

3.2.3.1 Sizing

Unless otherwise noted, all sizes are based on copper conductors and the insulation types indicated. Sizes shall be not less than indicated. Branch-circuit conductors shall be not smaller than No. 12 AWG. Conductors for branch circuits of 120 volts more than 100 feet long and of 277 volts more than 230 feet long, from panel to load center, shall be no smaller than No. 10 AWG. Class 1 remote control and signal circuit conductors shall be not less than No. 14 AWG. Class 2 remote control and signal circuit conductors shall be not less than No. 16 AWG. Class 3 low-energy, remote-control and signal circuits shall be not less than No. 22 AWG.

3.2.3.2 Use of Aluminum Conductors in Lieu of Copper

Aluminum conductors shall not be used.

3.2.3.3 Cable Systems

Cable systems shall be installed where indicated. Cables shall be installed concealed behind ceiling or wall finish where practicable. Cables shall be threaded through holes bored on the approximate centerline of wood members; notching of surfaces will not be permitted. Sleeves shall be provided through bond beams of masonry-block walls for threading cables through hollow spaces. Exposed cables shall be installed parallel or at right angles to walls or structural members. In rooms or areas not provided with ceiling or wall finish, cables and outlets shall be installed so that a room finish may be applied in the future without disturbing the cables or resetting the boxes. Exposed nonmetallic-sheathed cables less than 4 feet above floors shall be protected from mechanical injury by installation in conduit or tubing.

3.2.3.4 Cable Splicing

Splices shall be made in an accessible location. Crimping tools and dies shall be approved by the connector manufacturer for use with the type of connector and conductor.

a. Copper Conductors, 600 Volt and Under: Splices in conductors No. 10 AWG and smaller diameter shall be made with an insulated, pressure-type connector. Splices in conductors No. 8 AWG and larger diameter shall be made with a solderless connector and insulated with tape or heat-shrink type insulating material equivalent to the conductor insulation.

3.2.3.5 Conductor Identification and Tagging

Power, control, and signal circuit conductor identification shall be provided within each enclosure where a tap, splice, or termination is made. Where several feeders pass through a common pull box, the feeders shall be tagged to indicate clearly the electrical characteristics, circuit number, and panel designation. Phase conductors of low voltage power circuits shall be identified by color coding. Phase identification by a particular color shall be maintained continuously for the length of a circuit, including junctions.

a. Color coding shall be provided for service, feeder, branch, and ground conductors. Color shall be green for grounding conductors and white for neutrals; except where neutrals of more than one system are installed in the same raceway or box, other neutral shall be white with colored (not green) stripe. The color coding for three-phase and single-phase low voltage systems shall be as follows:

120/208-volt, 3-phase: Black(A), red(B), and blue(C).
277/480-volt, 3-phase: Brown(A), orange(B), and yellow(C).
120/240-volt, 1-phase: Black and red.

b. Conductor phase and voltage identification shall be made by color-coded insulation for all conductors smaller than No. 6 AWG. For conductors No. 6 AWG and larger, identification shall be made by color-coded insulation, or conductors with black insulation may be furnished and identified by the use of half-lapped bands of colored electrical tape wrapped around the insulation for a minimum of 3 inches of length near the end, or other method as submitted by the Contractor and approved by the Contracting Officer.

c. Control and signal circuit conductor identification shall be made by color-coded insulated conductors, plastic-coated self-sticking printed markers, permanently attached stamped metal foil markers, or equivalent means as approved. Control circuit terminals of equipment shall be properly identified. Terminal and conductor identification shall match that shown on approved detail drawings. Hand lettering or marking is not acceptable.

3.3 BOXES AND SUPPORTS

Boxes shall be provided in the wiring or raceway systems where required by NFPA 70 for pulling of wires, making connections, and mounting of devices or fixtures. Pull boxes shall be furnished with screw-fastened covers. Indicated elevations are approximate, except where minimum mounting heights for hazardous areas are required by NFPA 70. Unless otherwise indicated, boxes for wall switches shall be mounted 48 inches above finished floors. Switch and outlet boxes located on opposite sides of fire rated walls shall be separated by a minimum horizontal distance of 24 inches. The total combined

area of all box openings in fire rated walls shall not exceed 100 square inches per 100 square feet. Maximum box areas for individual boxes in fire rated walls vary with the manufacturer and must not exceed the maximum specified for that box in UL-03. Only boxes listed in UL-03 shall be used in fire rated walls.

3.3.1 Box Applications

Each box shall have not less than the volume required by NFPA 70 for number of conductors enclosed in box. Boxes for metallic raceways, 4 by 4 inch nominal size and smaller, shall be of the cast-metal hub type when located in normally wet locations, when flush and surface mounted on outside of exterior surfaces, or when located in hazardous areas. Cast-metal boxes installed in wet locations and boxes installed flush with the outside of exterior surfaces shall be gasketed. Boxes for mounting lighting fixtures shall be not less than 4 inches square, or octagonal, except smaller boxes may be installed as required by fixture configuration, as approved. Cast-metal boxes with 3/32 inch wall thickness are acceptable. Large size boxes shall be NEMA 1 or as shown. Boxes in other locations shall be sheet steel except that aluminum boxes may be used with aluminum conduit, and nonmetallic boxes may be used with nonmetallic conduit and tubing or nonmetallic sheathed cable system, when permitted by NFPA 70. Boxes for use in masonry-block or tile walls shall be square-cornered, tile-type, or standard boxes having square-cornered, tile-type covers.

3.3.2 Brackets and Fasteners

Boxes and supports shall be fastened to wood with wood screws or screw-type nails of equal holding strength, with bolts and metal expansion shields on concrete or brick, with toggle bolts on hollow masonry units, and with machine screw or welded studs on steel work. Threaded studs driven in by powder charge and provided with lockwashers and nuts, or nail-type nylon anchors may be used in lieu of expansion shields, or machine screws. Penetration of more than 1-1/2 inches into reinforced-concrete beams or more than 3/4 inch into reinforced-concrete joists shall avoid cutting any main reinforcing steel. The use of brackets which depend on gypsum wallboard or plasterboard for primary support will not be permitted. In partitions of light steel construction, bar hangers with 1 inch long studs, mounted between metal wall studs or metal box mounting brackets shall be used to secure boxes to the building structure. When metal box mounting brackets are used, additional box support shall be provided on the side of the box opposite the brackets. This additional box support shall consist of a minimum 12 inch long section of wall stud, bracketed to the opposite side of the box and secured by two screws through the wallboard on each side of the stud. Metal screws may be used in lieu of the metal box mounting brackets.

3.3.3 Mounting in Walls, Ceilings, or Recessed Locations

In walls or ceilings of concrete, tile, or other non-combustible material, boxes shall be installed so that the edge of the box is not recessed more than 1/4 inch from the finished surface. Boxes mounted in combustible walls or ceiling material shall be mounted flush with the finished surface. The use of gypsum or plasterboard as a means of supporting boxes will not be permitted. Boxes installed for concealed wiring shall be provided with suitable extension

rings or plaster covers, as required. The bottom of boxes installed in masonry-block walls for concealed wiring shall be mounted flush with the top of a block to minimize cutting of the blocks, and boxes shall be located horizontally to avoid cutting webs of block. Separate boxes shall be provided for flush or recessed fixtures when required by the fixture terminal operating temperature, and fixtures shall be readily removable for access to the boxes unless ceiling access panels are provided.

3.3.4 Installation in Overhead Spaces

In open overhead spaces, cast-metal boxes threaded to raceways need not be separately supported except where used for fixture support; cast-metal boxes having threadless connectors and sheet metal boxes shall be supported directly from the building structure or by bar hangers. Hangers shall not be fastened to or supported from joist bridging. Where bar hangers are used, the bar shall be attached to raceways on opposite sides of the box and the raceway shall be supported with an approved type fastener not more than 24 inches from the box.

3.4 DEVICE PLATES

One-piece type device plates shall be provided for all outlets and fittings. Plates on unfinished walls and on fittings shall be of zinc-coated sheet steel, cast-metal, or impact resistant plastic having rounded or beveled edges. Plates on finished walls shall be of steel with baked enamel finish or impact-resistant plastic and shall be ivory. Screws shall be of metal with countersunk heads, in a color to match the finish of the plate. Plates shall be installed with all four edges in continuous contact with finished wall surfaces without the use of mats or similar devices. Plaster fillings will not be permitted. Plates shall be installed with an alignment tolerance of 1/16 inch. The use of sectional-type device plates will not be permitted. Plates installed in wet locations shall be gasketed and provided with a hinged, gasketed cover, unless otherwise specified.

3.5 RECEPTACLES

3.5.1 Single and Duplex, 15 or 20-ampere, 125 volt

Single and duplex receptacles shall be rated 20 amperes, 125 volts, two-pole, three-wire, grounding type with polarized parallel slots. Bodies shall be of ivory or as indicated to match color of switch handles in the same room or to harmonize with the color of the respective wall, and supported by mounting strap having plaster ears. Contact arrangement shall be such that contact is made on two sides of an inserted blade. Receptacle shall be side- or back-wired with two screws per terminal. The third grounding pole shall be connected to the metal mounting yoke. Switched receptacles shall be the same as other receptacles specified except that the ungrounded pole of each suitable receptacle shall be provided with a separate terminal. Only the top receptacle of a duplex receptacle shall be wired for switching application. Receptacles with ground fault circuit interrupters shall have the current rating as indicated, and shall be UL Class A type unless otherwise shown. Ground fault circuit protection shall be provided as required by NFPA 70 and as indicated on the drawings.

3.5.2 Clock Outlet

Clock outlet, for use in other than a wired clock system, shall consist of an outlet box, a plaster cover where required, and a single receptacle with clock-outlet plate. The receptacle shall be recessed sufficiently within the box to allow the complete insertion of a standard cap, flush with the plate. A suitable clip or support for hanging the clock shall be secured to the top of the plate. Material and finish of the plate shall be as specified in paragraph DEVICE PLATES.

3.5.3 Floor Outlets

Floor outlets shall be nonadjustable and each outlet shall consist of a cast-metal body with threaded openings for conduits, flange ring, and cover plate with 1/2 inch or 3/4 inch threaded flush plug. Each telephone outlet shall consist of a horizontal cast housing with a receptacle as specified. Gaskets shall be used where necessary to ensure a watertight installation. Plugs with installation instructions shall be delivered to the Contracting Officer at the job site for capping outlets upon removal of service fittings.

3.5.4 Weatherproof Applications

Weatherproof receptacles shall be suitable for the environment, damp or wet as applicable, and the housings shall be labeled to identify the allowable use. Receptacles shall be marked in accordance with UL 514A for the type of use indicated; "Damp locations", "Wet Locations", "Wet Location Only When Cover Closed". Assemblies shall be installed in accordance with the manufacturer's recommendations.

3.5.4.1 Damp Locations

Receptacles in damp locations shall be mounted in an outlet box with a gasketed, weatherproof, cast-metal cover plate (device plate, box cover) and a gasketed cap (hood, receptacle cover) over each receptacle opening. The cap shall be either a screw-on type permanently attached to the cover plate by a short length of bead chain or shall be a flap type attached to the cover with a spring loaded hinge.

3.5.4.2 Wet Locations

Receptacles in wet locations shall be installed in an assembly rated for such use whether the plug is inserted or withdrawn, unless otherwise indicated. In a duplex installation, the receptacle cover shall be configured to shield the connections whether one or both receptacles are in use. Assemblies which utilize a self-sealing boot or gasket to maintain wet location rating shall be furnished with a compatible plug at each receptacle location and a sign notifying the user that only plugs intended for use with the sealing boot shall be connected during wet conditions.

3.5.5 Receptacles, 15-Ampere, 250-Volt

Receptacles, 15-ampere, 250-volt, shall be duplex two-pole, three-wire, grounding type with bodies of ivory phenolic compound supported by mounting

yoke having plaster ears. The third grounding pole shall be connected to the metal yoke. Each receptacle shall be provided with a mating cord-grip plug.

3.5.6 Receptacles, 20-Ampere, 250-Volt

Receptacles, single, 20-ampere, 250-volt, shall be ivory molded plastic, two-pole, three-wire or three-pole, four-wire, grounding type complete with appropriate mating cord-grip plug.

3.5.7 Receptacles, 30-Ampere, 125/250-Volt

Receptacles, single, 30-ampere, 125/250-volt, shall be molded-plastic, three-pole, four-wire, grounding type, complete with appropriate mating cord-grip type attachment plug. Each dryer receptacle shall be furnished with a non-detachable power supply cord for connection to the electric clothes dryer. The cord shall be an angle-type 36 inch length of Type SRDE range and dryer cable with No. 10 AWG conductors.

3.5.8 Receptacles, 30-Ampere, 250-Volt

Receptacles, single, 30-ampere, 250-volt, shall be molded-plastic, three-pole, three-wire type, complete with appropriate mating cord-grip plug.

3.5.9 Receptacles, 50-Ampere, 125/250-Volt

Receptacles, single 50-ampere, 125/250-volt, shall be flush, molded plastic, three-pole, four-wire, grounding type. Each range receptacle shall be furnished with a nondetachable power supply cord for connection to the electric range. The cord shall be an angle-type 36 inch length of SRDE range and dryer cable with No. 6 AWG conductors.

3.5.10 Receptacles, 50-Ampere, 250-Volt

Receptacles, single, 50-ampere, 250-volt, shall be flush molded plastic, three-pole, three-wire type, complete with appropriate mating cord-grip plug.

3.5.11 Special-Purpose or Heavy-Duty Receptacles

Special-purpose or heavy-duty receptacles shall be of the type and of ratings and number of poles indicated or required for the anticipated purpose. Contact surfaces may be either round or rectangular. One appropriate straight or angle-type plug shall be furnished with each receptacle. Locking type receptacles, rated 30 amperes or less, shall be locked by rotating the plug. Locking type receptacles, rated more than 50 amperes, shall utilize a locking ring.

3.6 WALL SWITCHES

Wall switches shall be of the totally enclosed tumbler type. The wall switch handle and switch plate color shall be ivory. Wiring terminals shall be of the screw type or of the solderless pressure type having suitable conductor-release arrangement. Not more than two switches shall be installed in a single-gang position. Switches shall be rated 20-ampere 120 or 277-volt (as applicable) for use on alternating current only. Pilot lights indicated

shall consist of yoke-mounted candelabra-base sockets rated at 75 watts, 125 volts, and fitted with glass or plastic jewels. A clear 6-watt lamp shall be furnished and installed in each pilot switch. Jewels for use with switches controlling motors shall be green, and jewels for other purposes shall be red. Dimming switches shall be solid-state flush mounted, sized for the loads.

3.7 SERVICE EQUIPMENT

Service-disconnecting means shall be of the enclosed molded-case circuit breaker type with an external handle for manual operation. When service disconnecting means is a part of an assembly, the assembly shall be listed as suitable for service entrance equipment. Enclosures shall be sheet metal with hinged cover for surface mounting unless otherwise indicated.

3.8 PANELBOARDS AND LOADCENTERS

Circuit breakers and switches used as a motor disconnecting means shall be capable of being locked in the open position. Door locks shall be keyed alike. Nameplates shall be as approved. Directories shall be typed to indicate loads served by each circuit and mounted in a holder behind a clear protective covering. Busses may be copper or aluminum.

3.8.1 Loadcenters

Loadcenters shall be circuit breaker equipped.

3.8.2 Panelboards

Panelboards shall be circuit breaker equipped as indicated on the drawings.

3.9 FUSES

Equipment provided under this contract shall be provided with a complete set of properly rated fuses when the equipment manufacturer utilize fuses in the manufacture of the equipment, or if current-limiting fuses are required to be installed to limit the ampere-interrupting capacity of circuit breakers or equipment to less than the maximum available fault current at the location of the equipment to be installed. Fuses shall have a voltage rating of not less than the phase-to-phase circuit voltage, and shall have the time-current characteristics required for effective power system coordination.

3.9.1 Cartridge Fuses; Noncurrent-Limiting Type

Cartridge fuses of the noncurrent-limiting type shall be Class H, nonrenewable, dual element, time lag type and shall have interrupting capacity of 10,000 amperes. At 500 percent current, cartridge fuses shall not blow in less than 10 seconds.

3.9.2 Cartridge Fuses; Current-Limiting Type

Cartridge fuses, current-limiting type shall have tested interrupting capacity not less than 100,000 amperes. Fuse holders shall be the type that will reject all Class H fuses.

3.9.3 Motor and Transformer Circuit Fuses

Motor, motor controller, transformer, and inductive circuit fuses shall be Class RK1 or RK5, current-limiting, time-delay with 200,000 amperes interrupting capacity.

3.10 UNDERGROUND SERVICE

Unless otherwise indicated, interior conduit systems shall be stubbed out 5 feet beyond the building wall and 2 feet below finished grade, for interface with the exterior service lateral conduits and exterior communications conduits. Outside conduit ends shall be bushed when used for direct burial service lateral conductors. Outside conduit ends shall be capped or plugged until connected to exterior conduit systems. Underground service lateral conductors will be extended to building service entrance and terminated.

3.11 AERIAL SERVICE

Services shall conform to the requirements of IEEE C2, and NFPA 70 and local power company criteria. The service drop conductors shall be continuous from the point of connection on the last pole to the service mast or structural support, connected to the service entrance conductors, and shall be routed to a weatherhead, or weatherproof conduit fitting, before entry into an enclosing conduit. A drip loop shall be formed in each service conductor below the entrance to the weatherhead or the weatherproof conduit fitting. The weatherhead or weatherproof service entrance conduit fitting shall be securely fastened to a rigid galvanized steel (RGS) conduit that shall be terminated in the service entrance equipment which penetrates the exterior wall or roof. Penetration of the conduit through an exterior wall shall be sealed to prevent the entrance of moisture and the escape of conditioned air. A roof penetration fitting shall be provided for the conduit to prevent the entrance of rain. Service entrance conductors shall be routed in RGS in the exterior wall, or in the interior of the building or facility that contains the service entrance equipment. Aerial service drop conductors will be extended to building service entrance and terminated.

3.12 MOTORS

Each motor shall conform to the hp and voltage ratings indicated, and shall have a service factor and other characteristics that are essential to the proper application and performance of the motors under conditions shown or specified. Motors supplied from a variable speed drive power source shall be rated for variable speed drive duty. Three-phase motors for use on 3-phase 208-volt systems shall have a nameplate rating of 200 volts. Unless otherwise specified, all motors shall have open frames, and continuous-duty classification based on a 40 degree C ambient temperature reference. Polyphase motors shall be squirrel-cage type, having normal-starting-torque and low-starting-current characteristics, unless other characteristics are specified in other sections of these specifications or shown on contract drawings. The Contractor shall be responsible for selecting the actual horsepower ratings and other motor requirements necessary for the applications indicated. When electrically driven equipment furnished under other sections of these specifications materially differs from the design, the Contractor

shall make the necessary adjustments to the wiring, disconnect devices and branch-circuit protection to accommodate the equipment actually installed.

3.13 MOTOR CONTROL

Each motor or group of motors requiring a single control shall be provided under other sections of these specifications with a suitable controller and devices that will perform the functions as specified for the respective motors. Each motor of 1/8 hp or larger shall be provided with thermal-overload protection. Polyphase motors shall have overload protection in each ungrounded conductor. The overload-protection device shall be provided either integral with the motor or controller, or shall be mounted in a separate enclosure. Unless otherwise specified, the protective device shall be of the manually reset type. Single or double pole tumbler switches specifically designed for alternating-current operation only may be used as manual controllers for single-phase motors having a current rating not in excess of 80 percent of the switch rating. Automatic control devices such as thermostats, float or pressure switches may control the starting and stopping of motors directly, provided the devices used are designed for that purpose and have an adequate horsepower rating. When the automatic-control device does not have such a rating, a magnetic starter shall be used, with the automatic-control device actuating the pilot-control circuit. When combination manual and automatic control is specified and the automatic-control device operates the motor directly, a double-throw, three-position tumbler or rotary switch shall be provided for the manual control; when the automatic-control device actuates the pilot control circuit of a magnetic starter, the latter shall be provided with a three-position selector switch marked MANUAL-OFF-AUTOMATIC. Connections to the selector switch shall be such that only the normal automatic regulatory control devices will be bypassed when the switch is in the Manual position; all safety control devices, such as low- or high-pressure cutouts, high-temperature cutouts, and motor-overload protective devices, shall be connected in the motor-control circuit in both the Manual and the Automatic positions of the selector switch. Control circuit connections to any MANUAL-OFF-AUTOMATIC switch or to more than one automatic regulatory control device shall be made in accordance with wiring diagram approved by the Contracting Officer unless such diagram is included on the drawings. All controls shall be 120 volts or less unless otherwise indicated.

3.13.1 Reduced-Voltage Controllers

Reduced-voltage controllers shall be provided for polyphase motors where indicated. Reduced-voltage starters shall be of the solid state PWM type unless otherwise indicated.

3.13.2 Contacts

Unless otherwise indicated, contacts in miscellaneous control devices such as float switches, pressure switches, and auxiliary relays shall have current and voltage ratings in accordance with NEMA ICS 2 for rating designation B300.

3.13.3 Safety Controls

Safety controls for boilers shall be connected to a 2-wire, 120 volt grounded circuit supplied from the associated boiler-equipment circuit. Where the boiler circuit is more than 120 volts to ground, safety controls shall be energized through a two-winding transformer having its 120 volt secondary winding grounded. Overcurrent protection shall be provided in the ungrounded secondary conductor and shall be sized for the load encountered.

3.14 MOTOR-DISCONNECT MEANS

Each motor shall be provided with a disconnecting means when required by NFPA 70 even though not indicated. For single-phase motors, a single or double pole toggle switch, rated only for alternating current, will be acceptable for capacities less than 30 amperes, provided the ampere rating of the switch is at least 125 percent of the motor rating. Switches shall disconnect all ungrounded conductors.

3.15 TRANSFORMER INSTALLATION

Three-phase transformers shall be connected only in a delta-wye configuration unless indicated otherwise, except isolation transformers having a one-to-one turns ratio. Dry-type transformers shown located within 5 feet of the exterior wall shall be provided in a weatherproof enclosure. Transformers to be located within the building may be provided in the manufacturer's standard, ventilated indoor enclosure designed for use in 40 degrees C ambient temperature, unless otherwise indicated.

3.16 LAMPS AND LIGHTING FIXTURES

Ballasted fixtures shall have ballasts which are compatible with the specific type and rating of lamps indicated and shall comply with the applicable provisions of the publications referenced.

3.16.1 Lamps

Lamps of the type, wattage, and voltage rating indicated shall be delivered to the project in the original cartons and installed in the fixtures just prior to the completion of the project.

3.16.1.1 Incandescent

Incandescent lamps shall be for 125-volt operation unless otherwise indicated.

3.16.1.2 Fluorescent

Fluorescent lamps for magnetic ballasts shall be as indicated and shall be of a type that will not require starter switches. Lamps shall be of the rapid-start type unless otherwise shown or approved. Fluorescent lamps for electronic ballasts shall be as indicated.

3.16.1.3 High-Intensity-Discharge

High-intensity-discharge lamps shall be the high-pressure sodium type unless otherwise indicated, shown, or approved.

3.16.2 Fixtures

Fixtures shall be as shown and shall conform to the following specifications and shall be as detailed on Standard Drawing No. 40-06-04, as indicated on the lighting schedule, which accompany and form a part of this specification for the types indicated. Illustrations shown on these sheets are indicative of the general type desired and are not intended to restrict selection to fixtures of any particular manufacturer. Fixtures of similar designs and equivalent energy efficiency, light distribution and brightness characteristics, and of equal finish and quality will be acceptable if approved. In suspended acoustical ceilings with fluorescent fixtures, the fluorescent emergency light fixtures shall be furnished with self-contained battery packs.

3.16.2.1 Accessories

Accessories such as straps, mounting plates, nipples, or brackets shall be provided for proper installation. Open type fluorescent fixtures with exposed lamps shall have a wire-basket type guard.

3.16.2.2 Suspended Fixtures

Suspended fixtures shall be provided with swivel hangers in order to ensure a plumb installation. Pendants, rods, or chains 4 feet or longer excluding fixture, shall be braced to limit swinging. Bracing shall be 3 directional, 120 degrees apart. Single unit suspended fluorescent fixtures shall have twin-stem hangers. Multiple unit or continuous-row fluorescent units shall have a tubing or stem for wiring at one point, and a tubing or rod suspension provided for each length of chassis including one at each end. Maximum distance between adjacent tubing or stems shall be 10 feet. Rods shall be of not less than 3/16 inch diameter. Flexible raceway shall be installed to each fixture from an overhead junction box. Fixture to fixture wiring installation is allowed only when fixtures are installed end to end in a continuous run.

3.16.2.3 Ceiling Fixtures

Ceiling fixtures shall be coordinated with and suitable for installation in, on, or from the suspended ceiling provided under other sections of these specifications. Installation and support of fixtures shall be in accordance with the NFPA 70 and manufacturer's recommendations. Recessed fixtures shall have adjustable fittings to permit alignment with ceiling panels. Recessed fixtures installed in fire-resistive type of suspended ceiling construction shall have the same fire rating as the ceiling or shall be provided with fireproofing boxes having materials of the same fire rating as the ceiling panels, in conformance with UL-03. Surface-mounted fixtures shall be suitable for fastening to the structural support for ceiling panels.

3.16.2.4 Sockets

Sockets of industrial, strip, and other open type fluorescent fixtures shall be of the type requiring a forced movement along the longitudinal axis of the lamp for insertion and removal of the lamp.

3.16.3 Emergency Light Sets

Emergency light sets shall conform to UL 924 with the number of heads as indicated. Sets shall be permanently connected to the wiring system by conductors installed in short lengths of flexible conduit.

3.17 EQUIPMENT CONNECTIONS

All wiring not furnished and installed under other sections of the specifications for the connection of electrical equipment as indicated on the drawings shall be furnished and installed under this section of the specifications. Connections shall comply with the applicable requirements of paragraph WIRING METHODS. Flexible conduits 6 feet or less in length shall be provided to all electrical equipment subject to periodic removal, vibration, or movement and for all motors. All motors shall be provided with separate grounding conductors. Liquid-tight conduits shall be used in damp or wet locations.

3.17.1 Motors and Motor Control

Motors, motor controls, and motor control centers shall be installed in accordance with NFPA 70, the manufacturer's recommendations, and as indicated. Wiring shall be extended to motors, motor controls, and motor control centers and terminated.

3.17.2 Installation of Government-Furnished Equipment

Wiring shall be extended to the equipment and terminated.

3.17.3 Food Service Equipment Provided Under Other Sections

Wiring shall be extended to the equipment and terminated.

3.18 CIRCUIT PROTECTIVE DEVICES

The Contractor shall calibrate, adjust, set and test each new adjustable circuit protective device to ensure that they will function properly prior to the initial energization of the new power system under actual operating conditions.

3.19 PAINTING AND FINISHING

Field-applied paint on exposed surfaces shall be provided under Section 09900 - PAINTING, GENERAL.

3.20 REPAIR OF EXISTING WORK

The work shall be carefully laid out in advance, and where cutting, channeling, chasing, or drilling of floors, walls, partitions, ceiling, or other surfaces is necessary for the proper installation, support, or anchorage of the conduit, raceways, or other electrical work, this work shall be carefully done, and any damage to building, piping, or equipment shall be repaired by skilled mechanics of the trades involved at no additional cost to the Government.

3.21 FIELD TESTING

Field testing shall be performed in the presence of the Contracting Officer. The Contractor shall notify the Contracting Officer 10 days prior to conducting tests. The Contractor shall furnish all materials, labor, and equipment necessary to conduct field tests. The Contractor shall perform all tests and inspection recommended by the manufacturer unless specifically waived by the Contracting Officer. The Contractor shall maintain a written record of all tests which includes date, test performed, personnel involved, devices tested, serial number and name of test equipment, and test results. All field test reports will be signed and dated by the Contractor.

3.21.1 Safety

The Contractor shall provide and use safety devices such as rubber gloves, protective barriers, and danger signs to protect and warn personnel in the test vicinity. The Contractor shall replace any devices or equipment which are damaged due to improper test procedures or handling.

3.21.2 Ground-Resistance Tests

The resistance of each grounding electrode system shall be measured using the fall-of-potential method defined in IEEE Std 81. Soil resistivity in the area of the grid shall be measured concurrently with the grid measurements. Ground resistance measurements shall be made before the electrical distribution system is energized and shall be made in normally dry conditions not less than 48 hours after the last rainfall. Resistance measurements of separate grounding electrode systems shall be made before the systems are bonded together below grade. The combined resistance of separate systems may be used to meet the required resistance, but the specified number of electrodes must still be provided.

a. Ground electrode system - 25 ohms.

3.21.3 Ground-Grid Connection Inspection

All below-grade ground-grid connections will be visually inspected by the Contracting Officer before backfilling. The Contractor shall notify the Contracting Officer 24 hours before the site is ready for inspection.

3.21.4 Cable Tests

The Contractor shall be responsible for identifying all equipment and devices that could be damaged by application of the test voltage and ensuring that

they have been properly disconnected prior to performing insulation resistance testing. An insulation resistance test shall be performed on all low and medium voltage cables after the cables are installed in their final configuration and prior to energization. The test voltage shall be 500 volts DC applied for one minute between each conductor and ground and between all possible combinations of conductors. The minimum value of resistance shall be:

R in megohms = (rated voltage in kV + 1) x 1000/(length of cable in feet)

Each cable failing this test shall be repaired or replaced. The repaired cable system shall then be retested until failures have been eliminated.

3.21.4.1 Low Voltage Cable Tests

a. Continuity test.

3.21.5 Motor Tests

a. Phase rotation test to ensure proper directions.

b. Operation and sequence of reduced voltage starters.

c. Insulation resistance of each winding to ground.

d. Vibration test.

3.21.6 Liquid-Filled Transformer Tests

The following field tests shall be performed on all liquid-filled transformers

a. Insulation resistance test phase-to-ground, each phase.

b. Turns ratio test.

c. Correct phase sequence.

d. Correct operation of tap changer.

3.21.7 Dry-Type Transformer Tests

The following field tests shall be performed on all dry-type transformers

a. Insulation resistance test phase-to-ground, each phase.

b. Turns ratio test.

3.21.8 Circuit Breaker Tests

The following field tests shall be performed on circuit breakers.

3.21.8.1 Circuit Breakers, Low Voltage

a. Insulation resistance test phase-to-phase, all combinations.

b. Closed breaker contact resistance test.

c. Manual and electrical operation of the breaker.

3.21.8.2 Circuit Breakers, Molded Case

a. Insulation resistance test phase-to-phase, all combinations.

b. Closed breaker contact resistance test.

c. Manual operation of the breaker.

3.21.9 Protective Relays

Protective relays shall be visually and mechanically inspected, adjusted, tested, and calibrated in accordance with the manufacturer's published instructions. These tests shall include pick-up, timing, contact action, restraint, and other aspects necessary to insure proper calibration and operation. Relay settings shall be implemented in accordance with the coordination study. Relay contacts shall be manually or electrically operated to verify that the proper breakers and alarms initiate. Relaying current transformers shall be field tested in accordance with IEEE C57.13.

3.22 OPERATING TESTS

After the installation is completed, and at such time as the Contracting Officer may direct, the Contractor shall conduct operating tests for approval. The equipment shall be demonstrated to operate in accordance with the specified requirements. An operating test report shall be submitted in accordance with paragraph FIELD TEST REPORTS.

3.23 FIELD SERVICE

3.23.1 Onsite Training

The Contractor shall conduct a training course for the operating staff as designated by the Contracting Officer. The training period shall consist of a total of number of hours recommended by the manufacturer, of normal working time and shall start after the system is functionally completed but prior to final acceptance tests. The course instruction shall cover pertinent points involved in operating, starting, stopping, servicing the equipment, as well as all major elements of the operation and maintenance manuals. Additionally, the course instructions shall demonstrate all routine maintenance operations.

3.23.2 Installation Engineer

After delivery of the equipment, the Contractor shall furnish one or more field engineers, regularly employed by the equipment manufacturer to supervise the installation of equipment, assist in the performance of the onsite tests, oversee initial operations, and instruct personnel as to the operational and maintenance features of the equipment.

3.24 ACCEPTANCE

Final acceptance of the facility will not be given until the Contractor has successfully completed all tests and after all defects in installation, material or operation have been corrected.

- - o 0 o - -

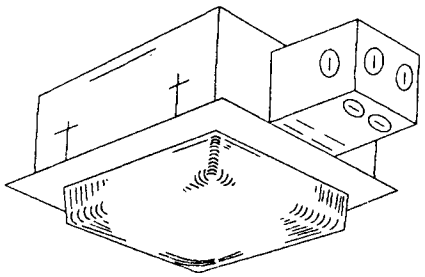

TYPE 126
Square

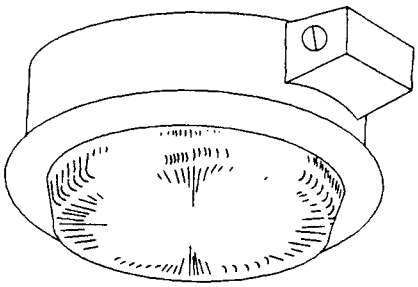

TYPE 127
Round

Weathertight, Insect-proof, Recessed Incandescent Fixture

First Suffix	Second Suffix	Description
A		Drop white opal glass lens
B		Flat prismatic glass lens
	1	Suspended plaster installation
	2	Concrete pour installation

Fixture shall conform to UL 1571 for use in wet locations and shall be enclosed and gasketed. Fixture shall be suitable for installation in outdoor soffitts. The housing shall be 18 gage hot-dipped galvanized steel and shall have sealed seam construction. The housing for suspended plaster installation shall be provided with hot-dipped galvanized steel sheet metal splice compartment and plaster frame. The housing for concrete pour installation shall be provided with a cast aluminum splice compartment. The interior surfaces of the housing shall be finished with baked white enamel. The reflector shall be one piece specular aluminum. The lampholder shall be medium base glazed porcelain. The lens frame shall be one piece cast aluminum with a 1/8-inch minimum wall thickness. The lens frame shall have a brushed satin aluminum finish and be provided with a clear acrylic lacquer protective coating. The lens frame shall be held securely to the fixture housing with a hinge and self-centering captive screws or with a chain-hinge and four self-centering captive screws. A round neoprene factory installed gasket shall be provided between the lens frame and the ceiling. A flat gasket shall be provided between the lens frame and the glass diffuser. The glass lens shall have a minimum thickness of 1/4 inch. The lens shall be held securely to the lens frame and gasket with steel clips and screws. Fixture shall be prewired. Fixture shall be rated for a 150 watt lamp.

Fixture types indicated on this sheet shall also conform to requirements specified and indicated in the contract documents.

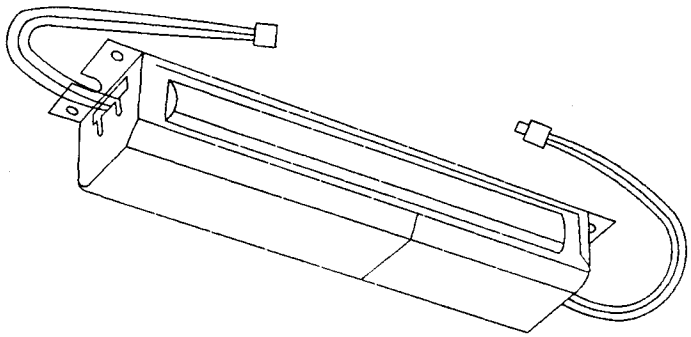

TYPE 200

Emergency Battery and Lamp Supply Unit for Fluorescent Fixtures

The unit shall conform to UL 924 and be UL Listed for field or factory installation. The unit shall be dual-rated for use on either 120 or 277 Volt lighting circuits, and shall meet or exceed NFPA 70 time and voltage requirements. The unit shall be capable of automatically supplying a minimum of 15 percent of the rated lumen output of a standard 4-foot, 40 watt rapid start fluorescent lamp in one minute following the failure of the normal power supply. It shall provide a minimum of 60 percent of the initial emergency illumination at the end of the 90-minute discharge period. The battery charger shall be capable of fully recharging the battery within 24 hours after the return of the normal power supply and, under normal operations, shall trickle charge the battery to maintain it in a fully charged condition. The unit shall be capable of operating at least one of the lamps in the fixture which also houses the unit and shall consist of a high temperature, pocket-plate type of nickel cadmium battery, charger, and electronic circuitry in one compact housing. A conveniently located test switch shall be provided to test the solid-state circuitry and the readiness of the battery. The battery shall be designed to require no maintenance during the expected life, be warranted for not less than three years from the date of the purchase of the unit, and be field replaceable without requiring removal of other components of the unit. Other components of the unit shall be fully warranted for not less than 18 months from the date of purchase of the unit.

The Emergency Battery and Lamp Supply Unit indicated on this sheet shall be provided as indicated on other sheets, and shall also conform to requirements specified or indicated in the contract documents.

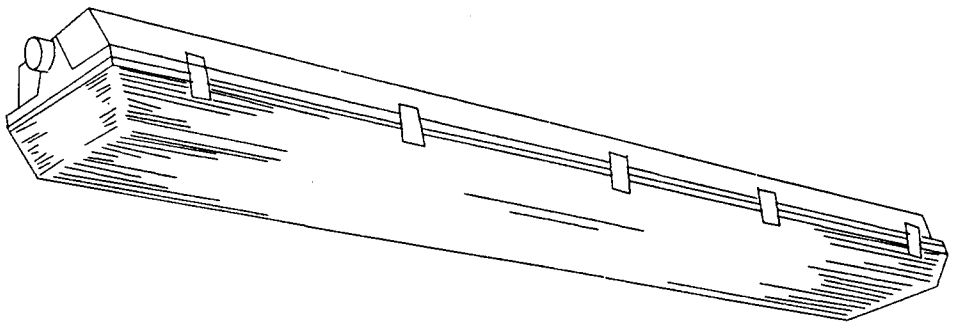

TYPE 232
4-Foot Fixture Length

TYPE 233
8-Foot Fixture Length

Enclosed and Gasketed, Vapor-Tight Fluorescent Fixture
For Surface or Pendant Mounting

Fixture shall conform to UL 1570 and shall be vapor-tight and suitable for use in wet locations. Fixture shall have one-piece housing of molded high-impact plastic or reinforced fiberglass. Housing body shall have an internal, die-formed, cold-rolled steel channel with cover to provide fixture rigidity and to contain electric components. The metal channel and cover shall receive a rust inhibitive coating before application of the finish coat, which shall consist of baked white enamel or porcelain enamel. The lens shall be one piece, of high-impact-resistant acrylic, and shall have smooth exterior surface and stippled or pebbled interior surface. The lens shall be secured to the housing with captive molded plastic or stainless steel spring latches. A continuous gasket shall be provided to form a vapor seal between the lens and the fixture body. All openings in the housing for mounting, conduit, etc., shall be capable of forming a vapor-tight seal. Ballast(s) shall be cold weather type for starting temperatures down to minus 20 degrees F. Standard ballast(s) shall be the Class P, high power factor type approved for the application by the Certified Ballast Manufacturers. Fixture shall be prewired, and provided with lamps that are properly mated to the ballast operating characteristics.

Fixture types indicated on this sheet shall also conform to requirements specified and indicated in the contract documents.

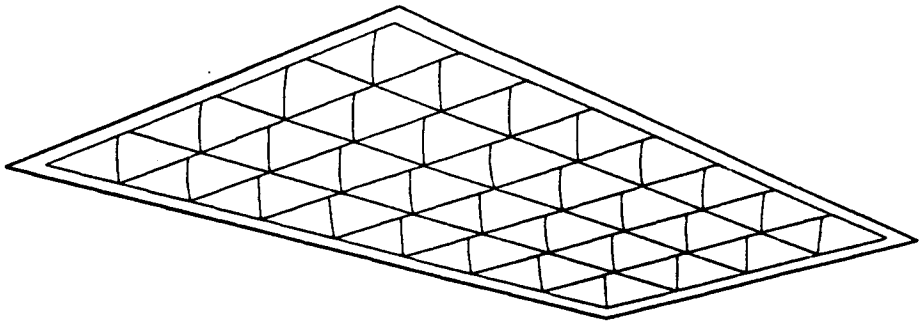

TYPE 234	TYPE 235	TYPE 236
Static Troffer	Air Handling Troffer	Heat Removal/ Transfer Troffer

Recessed Fluorescent Fixture, 2-foot by 4-foot, With Parabolic Louver

First Suffix	Second Suffix	Description
A		Two-lamp, 12-cell louver
B		Three-lamp, 18-cell louver
C		Four-lamp, 32-cell louver
	1	Type 200 emergency unit

Fixture shall conform to UL 1570. Housing, trim flanges if any, shall be die-formed, cold-rolled steel embossed if necessary to ensure structural rigidity. Metal parts to be painted shall receive one or more rust inhibitive coatings before application of the finish coat. Reflective surfaces shall be finished to provide an initial and minimum reflectance of not less than 85 percent. The louver shall be the anodized or semi-specular finished aluminum type consisting of inter- connected cellular baffles not less than three nor more than four inches in depth. The louver shall be hinged on either longitudinal side using die-formed steel hinges, and shall be held securely in place by the hinges and spring-steel latches that are inconspicuous or concealed from view when louver is in place and latches are closed. Securing the louver in place shall prevent light leakage and movement of the louver when subjected to normal vibrations. The ballast(s) and fixture wiring shall be concealed by a snap-in type of metal cover which can be removed and replaced without the use of tools. Standard ballast(s) shall be of the Class P, high power factor type that has been approved by the Certified Ballast Manufacturers for the application. Ballast(s), lampholders, louver and the wireway cover shall be removable and replaceable without removal of the fixture from the ceiling. Fixture shall be prewired.

Fixture type indicated on this sheet shall also conform to requirements specified and indicated in the contract documents.

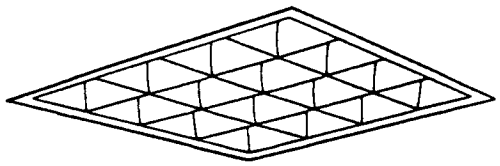

TYPE 240	TYPE 241	TYPE 242
Static Troffer	Air Handling Troffer	Heat Removal/ Transfer Troffer

Recessed Fluorescent Fixture, 2-foot by 2-foot, with parabolic louver

First Suffix	Second Suffix	Description
A		Single U lamp, 9-cell louver
B		Two U lamps, 9-cell louver
C		Two U lamps, 16-cell louver
D		Three U lamps, 8-cell louver
E		Three U lamps, 16-cell louver
	1	Type 200 emergency unit

Fixture shall conform to UL 1570. Housing, trim flanges if any, shall be die-formed, cold-rolled steel embossed if necessary to ensure structural rigidity. Metal parts to be painted shall receive one or more rust inhibitive coatings before the application of the finish coat. Reflective surfaces shall be finished to provide an initial and minimum reflectance of not less than 85 percent. The louver shall be the anodized or semi-specular finished aluminum type consisting of inter- connected cellular baffles not less than three nor more than four inches in depth. The louver shall be hinged on either longitudinal side using die-formed steel hinges, and shall be held securely in place by the hinges and spring-steel latches that are inconspicuous or concealed from view when louver is in place and latches are closed. Securing the louver in place shall prevent light leakage and movement of the louver when subjected to normal vibrations. The ballast(s) and fixture wiring shall be concealed by a snap-in type of metal cover which can be removed and replaced without the use of tools. Standard ballast(s) shall be of the Class P, high power factor type that has been approved by the Certified Ballast Manufacturers for the application. Ballast(s), lampholders, louver and the wireway cover shall be removable and replaceable without removal of the fixture from the ceiling. Fixture shall be prewired.

Fixture types indicated on this sheet shall also conform to requirements specified and indicated in the contract documents.

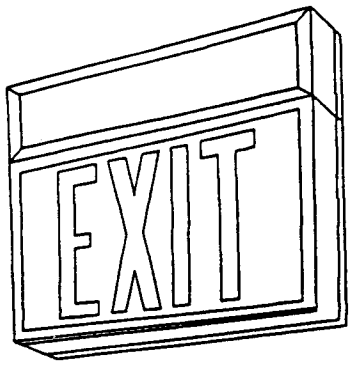

TYPE 604

Exit Sign With Self-Contained Emergency Battery

First Suffix	Second Suffix	Description
A		Single face
B		Double face
	1	End mounted
	2	Top mounted
	3	Back mounted
	4	Stem mounted

Unit shall conform to UL 924, NFPA 101, and shall meet or exceed the NFPA 70 time and voltage requirements. The unit shall be dual-rated for use on either 120-Volt or 277-Volt alternating current power supplies. Following sustained loss of the normal power supply, the unit shall be capable of automatically and instantaneously illuminating the two 6-Volt lighting fixtures for a period of not less than 90 minutes at a battery voltage in excess of 87.5 percent of the nominal voltage rating. The battery shall be the nickel-cadmium, pocket plate type designed to be maintenance free during the expected battery life, and shall be warranted for not less than 3 years from the date of the purchase of the unit, and shall be field replaceable without requiring removal of other components. The battery charger shall be the solid-state type and shall provide a continuous, variable, current limited, filtered and regulated charge rate. The battery and charger shall be contained in a steel cabinet not less than 18 gauge thickness with an enamel finish, unless otherwise approved, which shall be equipped with a push-to-test switch and a meter to indicate battery voltage when the switch is closed. Mounting brackets or shelf shall be provided, complete with all mounting hardware, all with a finish to match the finish or color of the cabinet. All ferrous metal parts shall receive a rust inhibitive coating before application of the finish coat. The fixture shall have a light-emitting diode pilot light to show that the battery charger is functioning. Fixture shall be prewired, with wiring concealed in the illuminated portion of the fixture housing.

Fixture type indicated on this sheet shall also conform to requirements specified and indicated in the contract documents.

SECTION 16640A - CATHODIC PROTECTION SYSTEM (SACRIFICIAL ANODE)

PART 1 - GENERAL

1.1 REFERENCES

The publications listed below form a part of this specification to the extent referenced. The publications are referred to in the text by basic designation only.

NATIONAL ASSOCIATION OF CORROSION ENGINEERS (NACE)

NACE RP0169	(1992) Control of External Corrosion on Underground or Submerged Metallic Piping Systems

NATIONAL FIRE PROTECTION ASSOCIATION (NFPA)

NFPA 70	(1996) National Electrical Code

1.2 GENERAL REQUIREMENTS

1.2.1 Services of Corrosion Engineer

The Contractor shall obtain the services of a corrosion engineer to design, supervise, and inspect the installation of the cathodic protection system. Corrosion Engineer refers to a person, who, by reason of his knowledge of the physical sciences and the principles of engineering and mathematics, acquired by professional education and related practical experience, is qualified to engage in the practice of corrosion control on buried or submerged metallic piping systems and metallic tanks. Such person may be a licensed professional engineer or may be a person certified as being qualified by the National Association of Corrosion Engineers if such licensing or certification includes suitable experience in corrosion control on buried or submerged metallic piping systems and metallic tanks. The corrosion engineer shall insure that the cathodic protection system is installed, tested, and placed into service in accordance with the requirements specified.

1.2.2 Rules

The installation shall conform to the applicable rules of NFPA 70. The design and installation shall conform to the applicable rules of NACE RP0169.

1.2.3 Extent of Work

The cathodic protection system shall be designed and installed to provide cathodic protection to all ferrous metal components installed below or in contact with the ground.

1.3 SUBMITTALS

Government approval is required for submittals with a "GA" designation; submittals having an "FIO" designation are for information only. The

following shall be submitted in accordance with Section 01330 - SUBMITTAL PROCEDURES:

SD-01 Data

Cathodic Protection System; FIO.

Manufacturer's Catalog Data.

Qualifications; FIO.

Evidence of qualifications of the corrosion engineer.

SD-04 Drawings

Cathodic Protection System; FIO.

Detail drawings consisting of a complete list of equipment and material including manufacturer's descriptive and technical literature, catalog cuts, and installation instructions. Detail drawings shall contain complete wiring and schematic diagrams and any other details required to demonstrate that the system has been coordinated and will function properly as a unit.

SD-09 Reports

Tests and Measurements; GA

Test reports in booklet form tabulating all field tests and measurements performed, upon completion and testing of the installed system.

PART 2 - PRODUCTS

2.1 MATERIALS

Materials shall comply with manufacturer's and corrosion engineer's recommendations.

PART 3 - EXECUTION

3.1 INSTALLATION

Unless otherwise indicated, all equipment shall be installed in accordance with the manufacturer's and corrosion engineer's recommendations.

- - o 0 o - -