IFB No. DACW09-02-B-0002

U.S. ARMY CORPS
OF ENGINEERS
LOS ANGELES DISTRICT

F-1 CHANNEL, HUALAPAI WAY TO BELTWAY, LAS VEGAS WASH AND TRIBUTARIES (TROPICANA AND FLAMINGO WASHES)

CLARK COUNTY, NEVADA

Construction Solicitation and Specifications

8(a) Competitive

FEBRUARY 2002

PROJECT TABLE OF CONTENTS

		Page Numbers
COVER		
Table of Contents		i
DIVISION 00 - BIDDING REQUIREMENTS, CONTRACTS FORMS AND CONTRACT CONDITIONS		
Section 00010	Solicitation, Offer and Award (SF1442) And Bidding Schedule and Notes	SF1442 Front & Back 00010-1 thru 00010-6
Section 00100	Instructions, Conditions, and Notice to Bidders	00100-1 thru 00100-11
Section 00600	Representations & Certifications	00600-1 thru 00600-14
Section 00700	Contract Clauses	00700-1 thru 00700-82
Section 00800	Special Contract Requirements	00800-1 thru 00800-17
Section 00850	Rates of Wages	00850-1 thru 00850-24
DIVISION 01 - GENERAL REQUIREMENTS		
Section 01200	General Requirements	01200-1 thru 01200-18
	General Requirement Figures & Detail	3 Figures & 1 Detail
Section 01270	Measurement and Payment	01270-1 thru 01270-13
Section 01321	Network Analysis Schedules (NAS)	01321-1 thru 01321-19
Section 01330	Submittal Procedures	01330-1 thru 01330-18
	Submittal Register & ENG Form 4025	8 Pages
Section 01355	Environmental Protection	01355-1 thru 01355-24
Section 01356	Storm Water Pollution Prevention Measures	01356-1 thru 01356-8
Section 01415	Metric Measurements	01415-1 thru 01415-3
Section 01420	Sources For Reference Publications	01420-1 thru 01420-17
Section 01451	Contractor Quality Control	01451-1 thru 01451-14
Section 01702	As-Built Drawings	01702-1 thru 01702-4
DIVISION 02 - SITE WORK		
Section 02100	Diversion and Control of Water	02100-1 thru 02100-2
Section 02230	Clear Site and Remove Obstructions	02230-1 thru 02230-3
Section 02300	Earthwork	02300-1 thru 02300-17
Section 02316	Excavation, Trenching, and Backfilling for Utilities Systems	02316-1 thru 02316-7
Section 02510	Water Distribution System	02510-1 thru 02510-11
Section 02531	Sanitary Sewers	02531-1 thru 02531-11
Section 02630	Storm-Drainage System	02630-1 thru 02630-6
Section 02710	Subdrainage Systems-Weephole Systems	02710-1 thru 02710-4
Section 02722	Aggregate and/or Graded-Crushed Aggregate Base Course	02722-1 thru 02722-12
Section 02741	Hot-Mix Asphalt (HMA) For Roads	02741-1 thru 02741-25
Section 02748	Bituminous Tack and Prime Coats	02748-1 thru 02748-6
Section 02821	Fencing	02821-1 thru 02821-7
DIVISION 03 - CONCRETE		
Section 03101	Formwork for Concrete	03101-1 thru 03101-6
Section 03151	Expansion, Contraction and Construction Joints in Concrete for Civil Works	03151-1 thru 03151-4
Section 03200	Concrete Reinforcement	03200-1 thru 03200-4
Section 03301	Cast-In-Place Structural Concrete For Civil Works	03301-1 thru 03301-38
DIVISION 05 - METALS		
Section 05500	Miscellaneous Metal	05500-1 thru 05500-7
DIVISION 09 - FINISHES		
Section 09900	Paints, Coatings and Station Markings	09900-1 thru 09900-13

-- End of Project Table of Contents --

SOLICITATION, OFFER AND AWARD *(Construction, Alteration, or Repair)*	1. SOLICITATION NO. DACW09-02-B-0002	2. TYPE OF SOLICITATION [X] SEALED BID *(IFB)* [ ] NEGOTIATED *(RFP)*	3. DATE ISSUED 19-Feb-2002	PAGE OF PAGES

IMPORTANT - The "offer" section on the reverse must be fully completed by offeror.

4. CONTRACT NO.	5. REQUISITION/PURCHASE REQUEST NO.	6. PROJECT NO.

7. ISSUED BY CODE	8. ADDRESS OFFER TO
Contracting Division P.O. Box 532711 Los Angeles, CA 90053-2325	See Item 7

9. FOR INFORMATION CALL:	A. NAME	B. TELEPHONE NO. *(Include area code) (NO COLLECT CALLS)*
	Diane Watkins	(213) 452-3251

SOLICITATION

NOTE: In sealed bid solicitations "offer" and "offeror" mean "bid" and "bidder."

10. THE GOVERNMENT REQUIRES PERFORMANCE OF THE WORK DESCRIBED IN THESE DOCUMENTS *(Title, identifying no., date):*

F-1 Channel, Hualapai Way to Beltway (South Bound Frontage Road)Las Vegas Wash and Tributaries (Tropicana and Flamingo Washes), Nevada. Work includes rectangular reinforced concrete flood control channel construction with associated reinforced concrete box road crossings, maintenance roads, confluences, inlets, railing and fencing.

This is an 8(a) competitive procurement. Completion is restricted to 8(a) firms services by the Nevada District of the SBA. To be eligible, the 8(a) firms must have North American Industry Classification System Code 23499 among their approved NAICS Codes.

The estimated cost range of this acquisition is over $10,000,000.00.

Bidders please note: The project may be delayed, cancelled or revised at any time during the solicitation and/or final award process.

11. The Contractor shall begin performance within 1 calendar days and complete it within 300 calendar days after receiving

[ ] award, [X] notice to proceed. This performance period is [ ] mandatory, [ ] negotiable. *(See _____ .)*

12A. THE CONTRACTOR MUST FURNISH ANY REQUIRED PERFORMANCE AND PAYMENT BONDS? *(If "YES," indicate within how many calendar days after award in Item 12B.)*	12B. CALENDAR DAYS
[X] YES [ ] NO	

13. ADDITIONAL SOLICITATION REQUIREMENTS:

A. Sealed offers in original and 0 copies to perform the work required are due at the place specified in Item 8 by 01:00:00 *(hour)* local time Mar 21/02 *(date)*. If this is a sealed bid solicitation, offers must be publicly opened at that time. Sealed envelopes containing offers shall be marked to show the offeror's name and address, the solicitation number, and the date and time offers are due.

B. An offer guarantee [X] is, [ ] is not required.

C. All offers are subject to the (1) work requirements, and (2) other provisions and clauses incorporated in the solicitation in full text or by reference.

D. Offers providing other than 60 calendar days for Government acceptance after the date offers are due will not be considered and will be rejected.

OFFER *(Must be fully completed by offeror)*

14. NAME AND ADDRESS OF OFFEROR *(Include ZIP Code)*

CODE FACILITY CODE

15. TELEPHONE NO. *(Include area code)*

16. REMITTANCE ADDRESS *(Include only if different than Item 14)*

17. The offeror agrees to perform the work required at the prices specified below in strict accordance with the terms of this solicitation, if this offer is accepted by the Government in writing within _____ calendar days after the date offers are due. *(Insert any number equal to or greater than the minimum requirement stated in Item 13D. Failure to insert any number means the offeror accepts the minimum in Item 13D.)*

AMOUNTS ▶

18. The offeror agrees to furnish any required performance and payment bonds.

19. ACKNOWLEDGMENT OF AMENDMENTS

(The offeror acknowledges receipt of amendments to the solicitation - give number and date of each)

AMENDMENT NO.										
DATE										

20A. NAME AND TITLE OF PERSON AUTHORIZED TO SIGN OFFER *(Type or print)*

20B. SIGNATURE

20C. OFFER DATE

AWARD *(To be completed by Government)*

21. ITEMS ACCEPTED:

22. AMOUNT

23. ACCOUNTING AND APPROPRIATION DATA

24. SUBMIT INVOICES TO ADDRESS SHOWN IN ▶ *(4 copies unless otherwise specified)*

ITEM

25. OTHER THAN FULL AND OPEN COMPETITION PURSUANT TO

☐ 10 U.S.C. 2304(c) ( ) ☐ 41 U.S.C. 253(c) ( )

26. ADMINISTERED BY CODE

27. PAYMENT WILL BE MADE BY

CONTRACTING OFFICER WILL COMPLETE ITEM 28 OR 29 AS APPLICABLE

☐ 28. NEGOTIATED AGREEMENT *Contractor is required to sign this document and return _____ copies to issuing office.)* Contractor agrees to furnish and deliver all items or perform all work requirements identified on this form and any continuation sheets for the consideration stated in this contract. The rights and obligations of the parties to this contract shall be governed by (a) this contract award, (b) the solicitation, and (c) the clauses, representations, certifications, and specifications incorporated by reference in or attached to this contract.

☐ 29. AWARD *(Contractor is not required to sign this document.)* Your offer on this solicitation is hereby accepted as to the items listed. This award consummates the contract, which consists of (a) the Government solicitation and your offer, and (b) this contract award. No further contractual document is necessary.

30A. NAME AND TITLE OF CONTRACTOR OR PERSON AUTHORIZED TO SIGN *(Type or print)*

31A. NAME OF CONTRACTING OFFICER *(Type or print)*

30B. SIGNATURE

30C. DATE

31B. UNITED STATES OF AMERICA

BY

31C. AWARD DATE

SECTION 00010

BID SCHEDULE

PART 1 GENERAL

1.1 **Base Bid**

Item	Description	Quantity	Unit	Unit Price	Amount
0001	Traffic Control	1	Job	LS	_____.__
0002	Diversion and Control of Water	1	Job	LS	_____.__
0003	Construction Water	1	Job	LS	_____.__
0004	Clear Site and Remove Obrstructions	1	Job	LS	_____.__
0005	Ladder Systems	1	Job	LS	_____.__
0006	Channel Station Marking	1	Job	LS	_____.__
0007	Confluence Structure #1	1	Job	LS	_____.__
0008	Confluence Structure #2	1	Job	LS	_____.__
0009	Access Ramp #1	1	Job	LS	_____.__
0010	Access Ramp #2	1	Job	LS	_____.__
0011	RCB near Beltway (4.000 m x 3.660 m)	1	Job	LS	_____.__
0012	RCB Fort Apache Lateral (3.660 m x 2.440 m)	1	Job	LS	_____.__
0013	RCB at Fort Apache (5.000 m x 3.000 m)	1	Job	LS	_____.__
0014	RCB at Grand Canyon Drive (5.000 m x 3.000 m)	1	Job	LS	_____.__
0015	Side Drain Connection, Sta. 14+51.017	1	Job	LS	_____.__
0016	Side Drain Connection, Sta. 20+88.197	1	Job	LS	_____.__
0017	Side Drain Connection, Sta. 29+05.435	1	Job	LS	_____.__
0018	Side Drain Connection, Sta. 29+08.310	1	Job	LS	_____.__
0019	Side Drain Connection, Sta. 29+11.186	1	Job	LS	_____.__

Item	Description	Quantity	Unit	Unit Price	Amount
0020	Stilling Well	1	Job	LS	_____.__
0021	Excavation, Channel	98,030	m^3	____.__	_____.__
0022	Compacted Fill, Channel	34,700	m^3	____.__	_____.__
0023	Compacted Fill, Roadway	2,500	m^3	____.__	_____.__
0024	Excess Material Disposal	54,480	m^3	____.__	_____.__
0025	Reinforced Concrete Pipe 0.914 m Dia.	58.8	m	____.__	_____.__
0026	Reinforced Concrete Pipe 1.219 m Dia.	4.8	m	____.__	_____.__
0027	Reinforced Concrete Pipe 1.372 m Dia.	19.6	m	____.__	_____.__
0028	Aggregate Base Course	1,817	m^3	____.__	_____.__
0029	Asphalt Concrete Pavement	1,105	t	____.__	_____.__
0030	Chain Link Fencing	3,850	m	____.__	_____.__
0031	Swing Gate	11	Ea	____.__	_____.__
0032	Post and Cable Railing	4,750	m	____.__	_____.__
0033	Concrete, Invert	6,440	m^3	____.__	_____.__
0034	Concrete, Wall	6,050	m^3	____.__	_____.__
0035	Pre-Emergent Herbicide/Dust Pallative	2	HA	____.__	_____.__

1.2 **Optional Bid Items**

Item	Description	Quantity	Unit	Unit Price	Amount
0036	F-1 RCB at Hualapai Way (4.000 m x 3.000 m)	1	Job	LS	_____.__
0037	F-2 RCB at Hualapai Way (5.000m x 3.000 m)	1	Job	LS	_____.__
0038	Side Drain Connection, Sta. 37+13.926	1	Job	LS	_____.__
0039	Reinforced Concrete Pipe 1.676 m Dia.	19.4	m	____.__	_____.__
0040	Steel Sleeve	104	m	____.__	_____.__

TOTAL ESTIMATED AMOUNT $_____._____

Basis of Bid shall be the entire work complete in accordance with the drawings and specifications for Base Bid Items, but not including the work indicated or specified to be provided under any Option Item.

Option may be exercised at the time of award or within 90 calendar days after award by the Contracting Officer. A firm fixed bid price is required for each option. No provision is made for economic price adjustment.

NOTE: All extensions of the unit prices shown will be subject to verification by the Government. In case of variation between the unit price and the extension, the unit price will be considered to be the bid.

If a bid or modification to a bid based on unit prices is submitted which provides for a lump sum adjustment to the total estimated cost, the application of the lump sum adjustment to each unit price in the SUPPLIES OR SERVICES AND PRICES/COSTS must be stated. If it is not stated, the bidder agrees that the lump sum adjustment shall be applied on a pro rate basis to every unit price in the SUPPLIES OR SERVICES AND PRICES/COSTS.

Amounts and prices shall be indicated in either figures or words, not both.

Bids shall be submitted on all items of the SUPPLIES OR SERVICES AND PRICES/COSTS.

Abbreviations:

m = meter
m^3 = cubic meter
t = metric ton (1000 kilograms)
ea = each
LS = lump sum
HA = hectare

PART 2 PRODUCTS (Not Used)
PART 3 EXECUTION (Not Used)
-- End of Section --

1. All extensions of the unit prices shown will be subject to verification by the Government. In case of variation between the unit price and the extension, the unit price will be considered to be the bid.

2. If a modification to a bid based on unit prices is submitted which provides for a lump sum adjustment to the total estimated amount, the application of the lump sum adjustment to each unit price in the Price Schedule must be stated. If it is not stated, the bidder agrees that the lump sum adjustment shall be applied on a pro rata basis to every unit price in the Price Schedule.

3. For the purpose of initial evaluation of bids, the following will be utilized in resolving arithmetic discrepancies found on the face of the Price Schedule as submitted by the bidder:

a. Obviously misplaced decimal points will be corrected;
b. In case of discrepancy between the unit price and the extended price, the unit price will govern;
c. Apparent errors in extensions of unit prices will be corrected;
d. Apparent errors in addition of lump sum and extended prices will be corrected.

4. For the purpose of bid evaluation, the Government will proceed on the assumption that the bidder intends the bid to be evaluated on the basis of unit prices the totals arrived at by the resolution of arithmetic discrepancies as provided above and the bid will be so reflected on the abstract of bids.

5. The lump sum "LS" line items in the Price Schedule are not "Estimated Quantity" line items and are not subject to the "Variation in Estimated Quantity" contract clause.

6. The Contract Clause 52.232-27, "Prompt Payment for Construction Contracts" requires that the name and address of the contractor official, to whom payment is to be sent, be the same as that in the contract or in a proper Notice of Assignment.

7. Principal Contracting Officer. The Contracting Officer who signs this contract will be the Principal Contracting Officer for this contract. However, any Contracting Officer assigned to the Los Angeles District, contracting within his authority, may take formal action on this contract when the Principal Contracting Officer is unavailable and the action needs to be taken.

8. Amounts and prices shall be indicated in either words or figures, NOT BOTH.

9. Payment of Electronic Funds Transfer (EFT) is the mandatory method of payment. The Contractors attention is directed to Contract Clause NO. 52.232-33 "Mandatory Information for Electronic Funds Transfer" located in Section 00800.

10. The bidder shall distribute his indirect costs (overhead, profit, bond, etc.,) over all items in the Price Schedule. The Government will review all submitted Price Schedules for any unbalancing of the items. Any submitted Price Schedule determined to be unbalanced may be considered non-responsive and cause the bidder to be ineligible for contract award.

11. The bidder shall furnish all plant, labor, material, equipment, etc., necessary to perform all work in strict accordance with the terms and conditions set forth in the contract in include all attachments thereto.

12. Some quantities are ESTIMATED, the bidders prices MUST BE FIRM.

13. Bidder is cautioned to check his Price Schedule carefully prior to submission. If the Price Schedule contains unit prices, they should be round off to the second decimal point only NOT EXTENDED FUTHER.

14. At the formal bid opening for this solicitation, all hand carried bids submitted prior to 12:45 p.m. on the bid opening date will be accepted in Room 1035 by available personnel. For the time period 12:45p.m. to 1:00 p.m., bids must be submitted to Room 1035(bid opening room), to the bid-opening officer only. Bids will not be accepted by any other personnel or at any other location. No bid will be accepted after 1:00 p.m. The official bid opening time will be called by the Bid Opening Officer.

15. Contractor is required to fill in Cage code (Reference Section 00600, entitled "Required Central Contractor Registration" Mar 1998) and DUNS Number (Reference Section 00600, entitled, "Data Universal Numbering System (DUNS) Number" Jun1999) in Block No. 15 on Standard Form 1442, Name and Address Block (Cage Code under Code and DUNS No. under Facility Code respectively).

16. Bidders are to submit prices on all line items in the Base Bid (0001 through 0035). In addition, bidders must submit prices on all line items in the Optional Bid Items (0036 through 0040). The Government contemplates award of one contract to the responsive, responsible bidder who submits the lowest bid for the Base Bid and Optional Bid Items. Any bidder who submits a bid without all line items for both Base Bid and Optional Bid Items filled out comprehensively and correctly will be deemed non-responsive and their bid will be rejected.

CERTIFICATE OF CORPORATE PRINCIPAL

1) IF THE OFFEROR IS A JOINT VENTURE, COMPLETE THE FOLLOWING:

_____	_____	_____
(Company Name)	(Signature)	(Title)
_____	_____	_____
(Company Name)	(Signature)	(Title)
_____	_____	_____
(Company Name)	(Signature)	(Title)

2) IF THE OFFEROR IS PARTNERSHIP, LIST FULL NAME OF ALL PARTNERS:

_____	_____	_____
(Company Name)	(Signature)	(Title)
_____	_____	_____
(Company Name)	(Signature)	(Title)
_____	_____	_____
(Company Name)	(Signature)	(Title)

3) IF THE OFFEROR IS A CORPORATION, THE FOLLOWING CERTIFICATION SHOULD BE COMPLETED:

CERTIFICATION AS TO CORPORATE PRINCIPAL

I, _____ , certify that I am the Secretary of the corporation named as principal in the within contract; that _____ , who signed the said contract on behalf of the principal, was the _____ of the corporation; that I know his signature and that his signature is genuine; and that said contract was duly signed, sealed and attested for in behalf of said corporation by authority of its governing body.

_____
CORPORATE PRINCIPAL

CORPORATE SEAL

_____
SECRETARY

SECTION 00100 Bidding Schedule/Instructions to Bidders

52.0000-4010 INQUIRIES 2
52.0000-4023 SAFETY REQUIREMENTS 2
52.0001-4004 BID RESULTS 2
52.211-2 AVAILABILITY OF SPECIFICATIONS LISTED IN THE DOD INDEX OF SPECIFICATIONS AND STANDARDS (DODISS) AND DESCRIPTIONS LISTED IN THE ACQUISITION MANAGEMENT SYSTEMS AND DATA REQUIREMENTS CONTROL LIST, DOD 5010.12-L (DEC 1999) 2
52.214-1 SOLICITATION DEFINITIONS--SEALED BIDDING (JUL 1987) 3
52.214-3 AMENDMENTS TO INVITATIONS FOR BIDS (DEC 1989) 3
52.214-4 FALSE STATEMENTS IN BIDS (APR 1984) 3
52.214-5 SUBMISSION OF BIDS (MAR 1997) 3
52.214-6 EXPLANATION TO PROSPECTIVE BIDDERS (APR 1984) 4
52.214-7 LATE SUBMISSIONS, MODIFICATIONS, AND WITHDRAWALS OF BIDS (NOV 1999) 4
52.214-18 PREPARATION OF BIDS--CONSTRUCTION (APR 1984) 4
52.214-19 CONTRACT AWARD--SEALED BIDDING--CONSTRUCTION (AUG 1996) 5
52.214-34 SUBMISSION OF OFFERS IN THE ENGLISH LANGUAGE (APR 1991) 5
52.214-35 SUBMISSION OF OFFERS IN U.S. CURRENCY (APR 1991) 5
52.0214-4001 DIRECTIONS FOR SUBMITTING BIDS 6
52.214-4500 ARITHMETIC DISCREPANCIES EFARS 52.214-5000 6
52.0214-4583 TELEGRAPHIC BIDS/OFFERS ARE NOT ACCEPTABLE 7
52.0214-4584 FACSIMILE BIDS/OFFERS 7
52.214-4599 EVALUATION FOR AWARD 7
52.216-1 TYPE OF CONTRACT (APR 1984) 7
52.219-18 NOTIFICATION OF COMPETITION LIMITED TO ELIGIBLE 8(A) CONCERNS (NOV 1999) 7
52.225-12 NOTICE OF BUY AMERICAN ACT REQUIREMENT-- CONSTRUCTION MATERIALS UNDER TRADE AGREEMENTS (FEB 2000) 8
52.228-1 BID GUARANTEE (SEP 1996) 9
52.228-4506 INDIVIDUAL SURETIES IN SUPPORT OF BID BONDS 9
52.228-4507 BID GUARANTEE FORM AND AMOUNT 9
52.232-38 SUBMISSION OF ELECTRONIC FUNDS TRANSFER INFORMATION WITH OFFER (MAY 1999) 10
52.233-2 SERVICE OF PROTEST (AUG 1996) 10
52.236-27 SITE VISIT (CONSTRUCTION) (FEB 1995) 10

SECTION 00100

52.0000-4010 INQUIRIES

Perspective bidders/offerors should submit inquiries related to this solicitation by writing or calling the following (collect calls will not be accepted:

(1) For inquiries of a contractual nature (solicitation requirements, interpretation of contractual language) call:
Diane Watkins

(213) 452-3251

For bid results only, call (213) 452-3235.

(2) All technical questions on the specification or drawings will be submitted in writing to:
Address:
U.S. Army Corps of Engineers, Los Angeles District
Attn: CE-SPLCT-E, Diane Watkins
P.O. Box 532711, Los Angeles, CA 90053-2325.

(3) Please include the solicitation number, project title and location of project with your questions. Written inquiries must be received by this office not later than 14 calendar days prior to bid opening date/date set for receipt of offers.

(4) Oral explanations or instructions are not binding. Any information given to a bidder/offeror which impacts the bid/offer will be given in the form of a written amendment to the solicitation.

52.0000-4023 SAFETY REQUIREMENTS

The bidder's attention is directed to the latest version of U.S Army Corps of Engineers Safety and Health Manual, EM 385-1-1, which will be strictly enforced. This publication may be obtained from the US Army Engineer District, Los Angeles, ATTN: Safety Office, P.O. Box 532711, Los Angeles, California 90053-2325.

52.0001-4004 BID RESULTS

The telephone number for bid results after the opening is Area Code (213) 452-3235.

52.211-2 AVAILABILITY OF SPECIFICATIONS LISTED IN THE DOD INDEX OF SPECIFICATIONS AND STANDARDS (DODISS) AND DESCRIPTIONS LISTED IN THE ACQUISITION MANAGEMENT SYSTEMS AND DATA REQUIREMENTS CONTROL LIST, DOD 5010.12-L (DEC 1999)

Copies of specifications, standards, and data item descriptions cited in this solicitation may be obtained--

(a) From the ASSIST database via the Internet at http://assist.daps.mil; or

(b) By submitting a request to the--Department of Defense Single Stock Point (DoDSSP), Building 4, Section D, 700 Robbins Avenue, Philadelphia, PA 19111-5094, Telephone (215) 697-2667/2179, Facsimile (215) 697-1462.

(End of provision)

52.214-1 SOLICITATION DEFINITIONS--SEALED BIDDING (JUL 1987)

"Government" means United States Government.

"Offer" means "bid" in sealed bidding.

"Solicitation" means an invitation for bids in sealed bidding.

(End of provision)

52.214-3 AMENDMENTS TO INVITATIONS FOR BIDS (DEC 1989)

(a) If this solicitation is amended, then all terms and conditions which are not modified remain unchanged.

(b) Bidders shall acknowledge receipt of any amendment to this solicitation (1) by signing and returning the amendment, (2) by identifying the amendment number and date in the space provided for this purpose on the form for submitting a bid, (3) by letter or telegram, or (4) by facsimile, if facsimile bids are authorized in the solicitation. The Government must receive the acknowledgment by the time and at the place specified for receipt of bids.

(End of provision)

52.214-4 FALSE STATEMENTS IN BIDS (APR 1984)

Bidders must provide full, accurate, and complete information as required by this solicitation and its attachments. The penalty for making false statements in bids is prescribed in 18 U.S.C. 1001.

(End of provision)

52.214-5 SUBMISSION OF BIDS (MAR 1997)

(a) Bids and bid modifications shall be submitted in sealed envelopes or packages (unless submitted by electronic means) (1) addressed to the office specified in the solicitation, and (2) showing the time and date specified for receipt, the solicitation number, and the name and address of the bidder.

(b) Bidders using commercial carrier services shall ensure that the bid is addressed and marked on the outermost envelope or wrapper as prescribed in subparagraphs (a)(1) and (2) of this provision when delivered to the office specified in the solicitation.

(c) Telegraphic bids will not be considered unless authorized by the solicitation; however, bids may be modified or withdrawn by written or telegraphic notice.

(d) Facsimile bids, modifications, or withdrawals, will not be considered unless authorized by the solicitation.

(e) Bids submitted by electronic commerce shall be considered only if the electronic commerce method was specifically stipulated or permitted by the solicitation.

52.214-6 EXPLANATION TO PROSPECTIVE BIDDERS (APR 1984)

Any prospective bidder desiring an explanation or interpretation of the solicitation, drawings, specifications, etc., must request it in writing soon enough to allow a reply to reach all prospective bidders before the submission of their bids. Oral explanations or instructions given before the award of a contract will not be binding. Any information given a prospective bidder concerning a solicitation will be furnished promptly to all other prospective bidders as an amendment to the solicitation, if that information is necessary in submitting bids or if the lack of it would be prejudicial to other prospective bidders.

(End of provision)

52.214-7 LATE SUBMISSIONS, MODIFICATIONS, AND WITHDRAWALS OF BIDS (NOV 1999)

(a) Bidders are responsible for submitting bids, and any modifications or withdrawals, so as to reach the Government office designated in the invitation for bids (IFB) by the time specified in the IFB. If no time is specified in the IFB, the time for receipt is 4:30 p.m., local time, for the designated Government office on the date that bids are due.

(b)(1) Any bid, modification, or withdrawal received at the Government office designated in the IFB after the exact time specified for receipt of bids is “late” and will not be considered unless it is received before award is made, the Contracting Officer determines that accepting the late bid would not unduly delay the acquisition; and--

(i) If it was transmitted through an electronic commerce method authorized by the IFB, it was received at the initial point of entry to the Government infrastructure not later than 5:00 p.m. one working day prior to the date specified for receipt of bids; or

(ii) There is acceptable evidence to establish that it was received at the Government installation designated for receipt of bids and was under the Government's control prior to the time set for receipt of bids.

(2) However, a late modification of an otherwise successful bid that makes its terms more favorable to the Government, will be considered at any time it is received and may be accepted.

(c) Acceptable evidence to establish the time of receipt at the Government installation includes the time/date stamp of that installation on the bid wrapper, other documentary evidence of receipt maintained by the installation, or oral testimony or statements of Government personnel.

(d) If an emergency or unanticipated event interrupts normal Government processes so that bids cannot be received at the Government office designated for receipt of bids by the exact time specified in the IFB and urgent Government requirements preclude amendment of the IFB, the time specified for receipt of bids will be deemed to be extended to the same time of day specified in the solicitation on the first work day on which normal Government processes resume.

(e) Bids may be withdrawn by written notice received at any time before the exact time set for receipt of bids. If the IFB authorizes facsimile bids, bids may be withdrawn via facsimile received at any time before the exact time set for receipt of bids, subject to the conditions specified in the provision at 52.214-31, Facsimile Bids. A bid may be withdrawn in person by a bidder or its authorized representative if, before the exact time set for receipt of bids, the identity of the person requesting withdrawal is established and the person signs a receipt for the bid.

(End of provision)

52.214-18 PREPARATION OF BIDS--CONSTRUCTION (APR 1984)

(a) Bids must be (1) submitted on the forms furnished by the Government or on copies of those forms, and (2) manually signed. The person signing a bid must initial each erasure or change appearing on any bid form.

(b) The bid form may require bidders to submit bid prices for one or more items on various bases, including--

(1) Lump sum bidding;

(2) Alternate prices;

(3) Units of construction; or

(4) Any combination of subparagraphs (1) through (3) above.

(c) If the solicitation requires bidding on all items, failure to do so will disqualify the bid. If bidding on all items is not required, bidders should insert the words "no bid" in the space provided for any item on which no price is submitted.

(d) Alternate bids will not be considered unless this solicitation authorizes their submission.

52.214-19 CONTRACT AWARD--SEALED BIDDING--CONSTRUCTION (AUG 1996)

(a) The Government will evaluate bids in response to this solicitation without discussions and will award a contract to the responsible bidder whose bid, conforming to the solicitation, will be most advantageous to the Government, considering only price and the price-related factors specified elsewhere in the solicitation.

(b) The Government may reject any or all bids, and waive informalities or minor irregularities in bids received.

(c) The Government may accept any item or combination of items, unless doing so is precluded by a restrictive limitation in the solicitation or the bid.

(d) The Government may reject a bid as nonresponsive if the prices bid are materially unbalanced between line items or subline items. A bid is materially unbalanced when it is based on prices significantly less than cost for some work and prices which are significantly overstated in relation to cost for other work, and if there is a reasonable doubt that the bid will result in the lowest overall cost to the Government even though it may be the low evaluated bid, or if it is so unbalanced as to be tantamount to allowing an advance payment.

52.214-34 SUBMISSION OF OFFERS IN THE ENGLISH LANGUAGE (APR 1991)

Offers submitted in response to this solicitation shall be in the English language. Offers received in other than English shall be rejected.

(End of provision)

52.214-35 SUBMISSION OF OFFERS IN U.S. CURRENCY (APR 1991)

Offers submitted in response to this solicitation shall be in terms of U.S. dollars. Offers received in other than U.S. dollars shall be rejected.

(End of provision)

52.0214-4001 DIRECTIONS FOR SUBMITTING BIDS

(a) Envelopes containing bids, bid guarantees, etc., must be sealed, marked and addressed as follows:

TO: US ARMY ENGINEER DISTRICT, LOS ANGELES
ATTN: CESPL-CT-E
P.O. Box 532711
Los Angeles, California 90053-2325

Bid under IFB No. DACW09-02-B-0002
Bid Opening Date: 21 March 2002

(b) Hand carried bids shall be deposited at US Army Engineer District, Los Angeles, 911 Wilshire Blvd, Los Angeles, California 90017, prior to the time and date set for opening of bids. Hand carried bids submitted prior to 12:45 P.M. on the bid opening date will be accepted in Suite 1035 and 1040 by available personnel. FOR THE TIME PERIOD OF 12:45 P.M. TO 1:00 P.M., BIDS MUST BE SUBMITTED TO SUITE 1035 (BID OPENING ROOM), TO THE BID OPENING OFFICER ONLY. BIDS WILL NOT BE ACCPETED BY ANY OTHER PERSONNEL OR AT ANY OTHER LOCATION. The official bid opening time will be the clock posted on the wall in the bid opening room.

(c) Telegraphic Modifications to Bids should be addressed to:

US Army Engineer District, Los Angeles
Contracting Division, Suite 1040
911 Wilshire Blvd
Los Angeles, California 90017

52.214-4500 ARITHMETIC DISCREPANCIES EFARS 52.214-5000

(a) For the purpose of initial evaluation of bids, the following will be utilized in resolving arithmetic discrepancies found on the face of the bidding schedule as submitted by bidders:

(1) Obviously misplaced decimal points will be corrected;
(2) Discrepancy between unit price and extended price, the unit price will govern;
(3) Apparent errors in extension of unit prices will be corrected;
(4) Apparent errors in addition of lump sum and extended prices will be corrected.

(b) For the purpose of bid evaluation, the Government will proceed on the assumption that the bidder intends his bid to be evaluated on the basis of the unit prices, the totals arrived at by resolution of arithmetic discrepancies as provided above and the bid will be so reflected on the abstract of bids.

(c) These correction procedures shall not be used to resolve any

ambiguity concerning which bid is low.

52.0214-4583 TELEGRAPHIC BIDS/OFFERS ARE NOT ACCEPTABLE

Any telegram to modify or withdraw a bid/offer sent to this office must be physically delivered to the office designated for receipt of bid/offer by the date and time set for bid opening/receipt of proposals.
No one from this office will be dispatched to the local telegraph office to pick up any telegram for any reason.

52.0214-4584 FACSIMILE BIDS/OFFERS

Facsimile bids/offers, modifications thereto, or cancellations of bids/offers will not be accepted.

52.214-4599 EVALUATION FOR AWARD

The Government contemplates award of one contract to the responsive, responsible bidder who submits the low bid for the Base Bid and Alternative 1 or the Base Bid and Alternative 2. The bid will be deemed non-responsive and rejected if the bidder submits a bid for both alternative 1 and Alternative 2.

52.216-1 TYPE OF CONTRACT (APR 1984)

The Government contemplates award of a Firm-Fixed Price contract resulting from this solicitation.

(End of clause)

52.219-18 NOTIFICATION OF COMPETITION LIMITED TO ELIGIBLE 8(A) CONCERNS (NOV 1999)

(a) Offers are solicited only from small business concerns expressly certified by the Small Business Administration (SBA) for participation in the SBA's 8(a) Program and which meet the following criteria at the time of submission of offer--

(1) The Offeror is in conformance with the 8(a) support limitation set forth in its approved business plan; and

(2) The Offeror is in conformance with the Business Activity Targets set forth in its approved business plan or any remedial action directed by the SBA.

(b) By submission of its offer, the Offeror represents that it meets all of the criteria set forth in paragraph (a) of this clause.

(c) Any award resulting from this solicitation will be made to the Small Business Administration, which will subcontract performance to the successful 8(a) offeror selected through the evaluation criteria set forth in this solicitation.

(d)(1) Agreement. A small business concern submitting an offer in its own name agrees to furnish, in performing the contract, only end items manufactured or produced by small business concerns in the United States. The term “United States” includes its territories and possessions, the Commonwealth of Puerto Rico, the Trust Territory of the Pacific Islands, and the District of Columbia. If this procurement is processed under simplified acquisition procedures and the total amount of this contract does not exceed

$25,000, a small business concern may furnish the product of any domestic firm. This subparagraph does not apply in connection with construction or service contracts.

(2) The _____ [insert name of SBA's contractor] will notify the USACE, Los Angeles District Contracting Officer in writing immediately upon entering an agreement (either oral or written) to transfer all or part of its stock or other ownership interest to any other party.

(End of clause)

52.225-12 NOTICE OF BUY AMERICAN ACT REQUIREMENT-- CONSTRUCTION MATERIALS UNDER TRADE AGREEMENTS (FEB 2000)

(a) Definitions. Construction material, designated country construction material, domestic construction material, foreign construction material, and NAFTA country construction material, as used in this provision, are defined in the clause of this solicitation entitled "Buy American Act--Balance of Payments Program--Construction Materials under Trade Agreements" (Federal Acquisition Regulation (FAR) clause 52.225-11).

(b) Requests for determination of inapplicability. An offeror requesting a determination regarding the inapplicability of the Buy American Act or Balance of Payments Program should submit the request to the Contracting Officer in time to allow a determination before submission of offers. The offeror shall include the information and applicable supporting data required by paragraphs (c) and (d) of FAR clause 52.225-11 in the request. If an offeror has not requested a determination regarding the inapplicability of the Buy American Act or Balance of Payments Program before submitting its offer, or has not received a response to a previous request, the offeror shall include the information and supporting data in the offer.

(c) Evaluation of offers. (1) The Government will evaluate an offer requesting exception to the requirements of the Buy American Act or Balance of Payments Program, based on claimed unreasonable cost of domestic construction materials, by adding to the offered price the appropriate percentage of the cost of such foreign construction material, as specified in paragraph (b)(4)(i) of FAR clause 52.225-11.

(2) If evaluation results in a tie between an offeror that requested the substitution of foreign construction material based on unreasonable cost and an offeror that did not request an exception, the Contracting Officer will award to the offeror that did not request an exception based on unreasonable cost.

(d) Alternate offers. (1) When an offer includes foreign construction material, other than designated country or NAFTA country construction material, that is not listed by the Government in this solicitation in paragraph (b)(3) of FAR clause 52.225-11, the offeror also may submit an alternate offer based on use of equivalent domestic, designated country, or NAFTA country construction material.

(2) If an alternate offer is submitted, the offeror shall submit a separate Standard Form 1442 for the alternate offer, and a separate price comparison table prepared in accordance with paragraphs (c) and (d) of FAR clause 52.225-11 for the offer that is based on the use of any foreign construction material for which the Government has not yet determined an exception applies.

(3) If the Government determines that a particular exception requested in accordance with paragraph (c) of FAR clause 52.225-11 does not apply, the Government will evaluate only those offers based on use of the equivalent domestic, designated country, or NAFTA country construction material, and the offeror shall be required to furnish such domestic, designated country, or NAFTA country construction material. An offer based on use of the foreign construction material for which an exception was requested--

(i) Will be rejected as nonresponsive if this acquisition is conducted by sealed bidding; or

(ii) May be accepted if revised during negotiations.

(End of provision)

52.228-1 BID GUARANTEE (SEP 1996)

(a) Failure to furnish a bid guarantee in the proper form and amount, by the time set for opening of bids, may be cause for rejection of the bid.

(b) The bidder shall furnish a bid guarantee in the form of a firm commitment, e.g., bid bond supported by good and sufficient surety or sureties acceptable to the Government, postal money order, certified check, cashier's check, irrevocable letter of credit, or, under Treasury Department regulations, certain bonds or notes of the United States. The Contracting Officer will return bid guarantees, other than bid bonds, (1) to unsuccessful bidders as soon as practicable after the opening of bids, and (2) to the successful bidder upon execution of contractual documents and bonds (including any necessary coinsurance or reinsurance agreements), as required by the bid as accepted.

(c) The amount of the bid guarantee shall be ____20____ percent of the bid price or $3,000,000.00, whichever is less.

(d) If the successful bidder, upon acceptance of its bid by the Government within the period specified for acceptance, fails to execute all contractual documents or furnish executed bond(s) within 10 days after receipt of the forms by the bidder, the Contracting Officer may terminate the contract for default.

(e) In the event the contract is terminated for default, the bidder is liable for any cost of acquiring the work that exceeds the amount of its bid, and the bid guarantee is available to offset the difference.

52.228-4506 INDIVIDUAL SURETIES IN SUPPORT OF BID BONDS

Bidder/offerors utilizing individual sureties in support of a bid bond shall include a Standard Form (SF) 28 (Affidavit of Individual Surety), accompanied by a pledge of acceptable assets from each person acting as an individual surety, and include these with the SF 24 (Bid Bond), and the bid itself (see clause titled "Pledges of Assets," FAR 52.228-11).

Pledges of acceptable assets shall be in the form of (1) evidence of an escrow account and/or (2) a recorded lien on real estate. If this is an RFP, failure to provide required documentation described herein may cause the offeror to be deemed "unacceptable".

52.228-4507 BID GUARANTEE FORM AND AMOUNT

When bids/proposals exceed $100,000, the offeror shall furnish a separated bid guarantee in accordance with the solicitation provision titled "Bid Guarantee", FAR 52.228-1. In accordance with FAR 28.101-2 the bid guarantee amount shall be a least 20 percent of the "bid price" but shall not exceed $3 million. When the penal sum is expressed as a percentage, a maximum dollar limitation may be stated. If there are option line items on the Pricing Schedule (Schedule B), the term "bid price" is hereby defined as the total bid not to include any amount for line items designated as "options". In bids/proposals that contain "additives", the "bid price" is defined as the total of all bid items including additive line items. FAR 28.106-1 states that a Standard Form (SF) 24 shall be used for the bid bond. In accordance with FAR 28.202(a)(1), corporate sureties utilized must appear on the list contained in the Department of Treasury Circular 570 titled "Companies Holding Certificates of Authority as Acceptable Sureties on Federal Bonds and Acceptable Reinsuring Companies."

52.232-38 SUBMISSION OF ELECTRONIC FUNDS TRANSFER INFORMATION WITH OFFER (MAY 1999)

The offeror shall provide, with its offer, the following information that is required to make payment by electronic funds transfer (EFT) under any contract that results from this solicitation. This submission satisfies the requirement to provide EFT information under paragraphs (b)(1) and (j) of the clause at 52.232-34, Payment by Electronic Funds Transfer--Other than Central Contractor Registration.

(1) The solicitation number (or other procurement identification number).

(2) The offeror's name and remittance address, as stated in the offer.

(3) The signature (manual or electronic, as appropriate), title, and telephone number of the offeror's official authorized to provide this information.

(4) The name, address, and 9-digit Routing Transit Number of the offeror's financial agent.

(5) The offeror's account number and the type of account (checking, savings, or lockbox).

(6) If applicable, the Fedwire Transfer System telegraphic abbreviation of the offeror's financial agent.

(7) If applicable, the offeror shall also provide the name, address, telegraphic abbreviation, and 9-digit Routing Transit Number of the correspondent financial institution receiving the wire transfer payment if the offeror's financial agent is not directly on-line to the Fedwire and, therefore, not the receiver of the wire transfer payment.

(End of provision)

52.233-2 SERVICE OF PROTEST (AUG 1996)

(a) Protests, as defined in section 33.101 of the Federal Acquisition Regulation, that are filed directly with an agency, and copies of any protests that are filed with the General Accounting Office (GAO), shall be served on the Contracting Officer (addressed as follows) by obtaining written and dated acknowledgment of receipt from John A. Eugino, C/O Diane Watkins, P.O. Box 532711, Los Angeles, CA 90053-2325.

(b) The copy of any protest shall be received in the office designated above within one day of filing a protest with the GAO.

(End of provision)

52.236-27 SITE VISIT (CONSTRUCTION) (FEB 1995)

(a) The clauses at 52.236-2, Differing Site Conditions, and 52.236-3, Site Investigations and Conditions Affecting the Work, will be included in any contract awarded as a result of this solicitation. Accordingly, offerors or quoters are urged and expected to inspect the site where the work will be performed.

(b) Site visits may be arranged during normal duty hours by contacting:
Name: Robert Caskie
Address:
Telephone: (702) 252-4160

A site visit will be conducted on 27 February 2002 at 10:00A.M. at the intersection of Hualapai Way and the F-1 Channel.

SECTION 00600 – Representations & Certifications

52.203-2 CERTIFICATE OF INDEPENDENT PRICE DETERMINATION (APR 1985) 2
52.203-11 CERTIFICATION AND DISCLOSURE REGARDING PAYMENTS TO INFLUENCE CERTAIN FEDERAL TRANSACTIONS (APR 1991)..... 2
52.204-3 TAXPAYER IDENTIFICATION (OCT 1998)..... 3
52.204-6 DATA UNIVERSAL NUMBERING SYSTEM (DUNS) NUMBER (JUN 99) 4
52.209-5 CERTIFICATION REGARDING DEBARMENT, SUSPENSION, PROPOSED DEBARMENT, AND OTHER RESPONSIBILITY MATTERS (JAN 2001) 5
52.219-1 SMALL BUSINESS PROGRAM REPRESENTATIONS (MAY 2001) ALTERNATE I (OCT 2000) & ALTERNATE II (OCT 2000) 6
52.219-2 EQUAL LOW BIDS. (OCT 1995)..... 8
52.219-19 SMALL BUSINESS CONCERN REPRESENTATION FOR THE SMALL BUSINESS COMPETITIVENESS DEMONSTRATION PROGRAM (OCT 2000)..... 9
52.219-22 SMALL DISADVANTAGED BUSINESS STATUS (OCT 1999) ALTERNATE I (OCT 1998) 9
52.222-21 PROHIBITION OF SEGREGATED FACILITIES (FEB 1999) 10
52.222-22 PREVIOUS CONTRACTS AND COMPLIANCE REPORTS (FEB 1999)..... 11
52.223-13 CERTIFICATION OF TOXIC CHEMICAL RELEASE REPORTING (OCT 2000) 11
252.204-7001 COMMERCIAL AND GOVERNMENT ENTITY (CAGE) CODE REPORTING (AUG 1999) 12
252.204-7004 REQUIRED CENTRAL CONTRACTOR REGISTRATION.(MAR 2000)..... 12
252.209-7001 DISCLOSURE OF OWNERSHIP OR CONTROL BY THE GOVERNMENT OF A TERRORIST COUNTRY (MAR 1998)..... 13
252.247-7022 REPRESENTATION OF EXTENT OF TRANSPORTATION BY SEA (AUG 1992)... 14

SECTION 00600

52.203-2 CERTIFICATE OF INDEPENDENT PRICE DETERMINATION (APR 1985)

(a) The offeror certifies that --

(1) The prices in this offer have been arrived at independently, without, for the purpose of restricting competition, any consultation, communication, or agreement with any other offeror or competitor relating to (i) those prices, (ii) the intention to submit an offer, or (iii) the methods of factors used to calculate the prices offered:

(2) The prices in this offer have not been and will not be knowingly disclosed by the offeror, directly or indirectly, to any other offeror or competitor before bid opening (in the case of a sealed bid solicitation) or contract award (in the case of a negotiated solicitation) unless otherwise required by law; and

(3) No attempt has been made or will be made by the offeror to induce any other concern to submit or not to submit an offer for the purpose of restricting competition.

(b) Each signature on the offer is considered to be a certification by the signatory that the signatory --

(1) Is the person in the offeror's organization responsible for determining the prices offered in this bid or proposal, and that the signatory has not participated and will not participate in any action contradictory to subparagraphs (a)(1) through (a)(3) above; or

(2) (i) Has been authorized, in writing, to act as an agent for the following principals in certifying that those principals have not participated, and will not participate in any action contrary to subparagraphs (a)(1) through (a)(3) above _____ (insert full name of person(s) in the offeror's organization responsible for determining the prices offered in this bid or proposal, and the title of his or her position in the offeror's organization);

(ii) As an authorized agent, does certify that the principals named in subdivision (b)(2)(i) above have not participated, and will not participate, in any action contrary to subparagraphs (a)(1) through (a)(3) above; and

(iii) As an agent, has not personally participated, and will not participate, in any action contrary to subparagraphs (a)(1) through (a)(3) above.

(c) If the offeror deletes or modifies subparagraph (a)(2) above, the offeror must furnish with its offer a signed statement setting forth in detail the circumstances of the disclosure.

(End of clause)

52.203-11 CERTIFICATION AND DISCLOSURE REGARDING PAYMENTS TO INFLUENCE CERTAIN FEDERAL TRANSACTIONS (APR 1991)

(a) The definitions and prohibitions contained in the clause, at FAR 52.203-12, Limitation on Payments to Influence Certain Federal Transactions, included in this solicitation, are hereby incorporated by reference in paragraph (b) of this Certification.

(b) The offeror, by signing its offer, hereby certifies to the best of his or her knowledge and belief that on or after December 23, 1989,--

(1) No Federal appropriated funds have been paid or will be paid to any person for influencing or attempting to influence an officer or employee of any agency, a Member of Congress, an officer or employee of Congress, or an employee of a member of Congress on his or her behalf in connection with the

awarding of any Federal contract, the making of any Federal grant, the making of any Federal loan, the entering into of any cooperative agreement, and the extension, continuation, renewal, amendment or modification of any Federal contract, grant, loan, or cooperative agreement;

(2) If any funds other than Federal appropriated funds (including profit or fee received under a covered Federal transaction) have been paid, or will be paid to any person for influencing or attempting to influence an officer or employee of any agency, a Member of Congress, an officer or employee of Congress or an employee of a Member of Congress on his or her behalf in connection with this solicitation, the offeror shall complete and submit, with its offer, OMB standard form LLL, Disclosure of Lobbying Activities, to the Contracting Officer; and

(3) He or she will include the language of this certification in all subcontract awards at any tier and require that all recipients of subcontract awards in excess of $100,000 shall certify and disclose accordingly.

(c) Submission of this certification and disclosure is a prerequisite for making or entering into this contract imposed by section 1352, title 31, United States Code. Any person who makes an expenditure prohibited under this provision, shall be subject to a civil penalty of not less than $10,000, and not more than $100,000, for each such failure.

(End of provision)

52.204-3 TAXPAYER IDENTIFICATION (OCT 1998)

(a) Definitions.

Common parent, as used in this provision, means that corporate entity that owns or controls an affiliated group of corporations that files its Federal income tax returns on a consolidated basis, and of which the offeror is a member.

Taxpayer Identification Number (TIN), as used in this provision, means the number required by the Internal Revenue Service (IRS) to be used by the offeror in reporting income tax and other returns. The TIN may be either a Social Security Number or an Employer Identification Number.

(b) All offerors must submit the information required in paragraphs (d) through (f) of this provision to comply with debt collection requirements of 31 U.S.C. 7701(c) and 3325(d), reporting requirements of 26 U.S.C. 6041, 6041A, and 6050M, and implementing regulations issued by the IRS. If the resulting contract is subject to the payment reporting requirements described in Federal Acquisition Regulation (FAR) 4.904, the failure or refusal by the offeror to furnish the information may result in a 31 percent reduction of payments otherwise due under the contract.

(c) The TIN may be used by the Government to collect and report on any delinquent amounts arising out of the offeror's relationship with the Government (31 U.S.C. 7701(c)(3)). If the resulting contract is subject to the payment reporting requirements described in FAR 4.904, the TIN provided hereunder may be matched with IRS records to verify the accuracy of the offeror's TIN.

(d) Taxpayer Identification Number (TIN).

___ TIN:.----------

___ TIN has been applied for.

___ TIN is not required because:

___ Offeror is a nonresident alien, foreign corporation, or foreign partnership that does not have income effectively connected with the conduct of a trade or business in the United States and does not have an office or place of business or a fiscal paying agent in the United States;

___ Offeror is an agency or instrumentality of a foreign government;

___ Offeror is an agency or instrumentality of the Federal Government.

(e) Type of organization.

___ Sole proprietorship;

___ Partnership;

___ Corporate entity (not tax-exempt);

___ Corporate entity (tax-exempt);

___ Government entity (Federal, State, or local);

___ Foreign government;

___ International organization per 26 CFR 1.6049-4;

___ Other----------

(f) Common parent.

___ Offeror is not owned or controlled by a common parent as defined in paragraph (a) of this provision.

___ Name and TIN of common parent:

Name----------

TIN----------

(End of provision)

52.204-6 DATA UNIVERSAL NUMBERING SYSTEM (DUNS) NUMBER (JUN 99)

(a) Contractor identification is essential for complying with statutory contract reporting requirements. Therefore, the offeror is requested to enter, in the block with its name and address on the Standard Form 33 or similar document, the annotation "DUNS" followed by the DUNS number which identifies the offeror's name and address exactly as stated in the offer.

(b) If the offeror does not have a DUNS number, it should contact Dun and Bradstreet directly to obtain one. A DUNS number will be provided immediately by telephone at no charge to the offeror. For information on obtaining a DUNS number, the offeror, if located within the United States, should call Dun and Bradstreet at 1-800-333-0505. The offeror should be prepared to provide the following information:

(1) Company name.

(2) Company address.

(3) Company telephone number.

(4) Line of business.

(5) Chief executive officer/key manager.

(6) Date the company was started.

(7) Number of people employed by the company.

(8) Company affiliation.

(c) Offerors located outside the United States may obtain the location and phone number of the local Dun and Bradstreet Information Services office from the Internet Home Page at http://www.customerservice@dnb.com/. If an offeror is unable to locate a local service center, it may send an e-mail to Dun and Bradstreet at globalinfo@dnb.com.

(End of provision)

52.209-5 CERTIFICATION REGARDING DEBARMENT, SUSPENSION, PROPOSED DEBARMENT, AND OTHER RESPONSIBILITY MATTERS (JAN 2001)

(a)(1) The Offeror certifies, to the best of its knowledge and belief, that--

(i) The Offeror and/or any of its Principals--

(A) Are [ ] are not [ ] presently debarred, suspended, proposed for debarment, or declared ineligible for the award of contracts by any Federal agency;

(B) Have [ ] have not [ ], within the three-year period preceding this offer, been convicted of or had a civil judgment rendered against them for: commission of fraud or a criminal offense in connection with obtaining, attempting to obtain, or performing a public (Federal, state, or local) contract or subcontract; violation of Federal or state antitrust statutes relating to the submission of offers; or commission of embezzlement, theft, forgery, bribery, falsification or destruction of records, making false statements, tax evasion, or receiving stolen property;

(C) Are [ ] are not [ ] presently indicted for, or otherwise criminally or civilly charged by a governmental entity with, commission of any of the offenses enumerated in subdivision (a)(1)(i)(B) of this provision; and

(ii)(A) The offeror, aside from the offenses enumerated in paragraphs (a)(1)(i)(A), (B), and (C) of this provision, has [ ] has not [ ] within the past three years, relative to tax, labor and employment, environmental, antitrust, or consumer protection laws--

(1) Been convicted of a Federal or state felony (or has any Federal or state felony indictments currently pending against them); or

(2) Had a Federal court judgment in a civil case brought by the United States rendered against them; or

(3) Had an adverse decision by a Federal administrative law judge, board, or commission indicating a willful violation of law.

(B) If the offeror has responded affirmatively, the offeror shall provide additional information if requested by the Contracting Officer; and

(iii) The Offeror has [ ] has not [ ], within a three-year period preceding this offer, had one or more contracts terminated for default by any Federal agency.

(2) "Principals," for the purposes of this certification, means officers; directors; owners; partners; and, persons having primary management or supervisory responsibilities within a business entity (e.g., general manager; plant manager; head of a subsidiary, division, or business segment, and similar positions).

THIS CERTIFICATION CONCERNS A MATTER WITHIN THE JURISDICTION OF AN AGENCY OF THE UNITED STATES AND THE MAKING OF A FALSE, FICTITIOUS, OR FRAUDULENT CERTIFICATION MAY RENDER THE MAKER SUBJECT TO PROSECUTION UNDER SECTION 1001, TITLE 18, UNITED STATES CODE.

(b) The Offeror shall provide immediate written notice to the Contracting Officer if, at any time prior to contract award, the Offeror learns that its certification was erroneous when submitted or has become erroneous by reason of changed circumstances.

(c) A certification that any of the items in paragraph (a) of this provision exists will not necessarily result in withholding of an award under this solicitation. However, the certification will be considered in connection with a determination of the Offeror's responsibility. Failure of the Offeror to furnish a certification or provide such additional information as requested by the Contracting Officer may render the Offeror nonresponsible.

(d) Nothing contained in the foregoing shall be construed to require establishment of a system of records in order to render, in good faith, the certification required by paragraph (a) of this provision. The knowledge and information of an Offeror is not required to exceed that which is normally possessed by a prudent person in the ordinary course of business dealings.

(e) The certification in paragraph (a) of this provision is a material representation of fact upon which reliance was placed when making award. If it is later determined that the Offeror knowingly rendered an erroneous certification, in addition to other remedies available to the Government, the Contracting Officer may terminate the contract resulting from this solicitation for default.

(End of provision)

52.219-1 SMALL BUSINESS PROGRAM REPRESENTATIONS (MAY 2001) ALTERNATE I (OCT 2000) & ALTERNATE II (OCT 2000)

(a)(1) The North American Industry Classification System (NAICS) code for this acquisition is 23499 (insert NAICS code).

(2) The small business size standard is $27.5 million (insert size standard).

(3) The small business size standard for a concern which submits an offer in its own name, other than on a construction or service contract, but which proposes to furnish a product which it did not itself manufacture, is 500 employees.

(b) Representations. (1) The offeror represents as part of its offer that it ( ) is, ( ) is not a small business concern.

(2) (Complete only if the offeror represented itself as a small business concern in paragraph (b)(1) of this provision.) The offeror represents, for general statistical purposes, that it ( ) is, ( ) is not a small disadvantaged business concern as defined in 13 CFR 124.1002.

(3) (Complete only if the offeror represented itself as a small business concern in paragraph (b)(1) of this provision.) The offeror represents as part of its offer that it ( ) is, ( ) is not a women-owned small business concern.

(4) (Complete only if the offeror represented itself as a small business concern in paragraph (b)(1) of this provision.) The offeror represents as part of its offer that it ( ) is, ( ) is not a veteran-owned small business concern.

(5) (Complete only if the offeror represented itself as a veteran-owned small business concern in paragraph (b)(4) of this provision.) The offeror represents as part of its offer that it ( ) is, ( ) is not a service-disabled veteran-owned small business concern.

(6) (Complete only if offeror represented itself as small business concern in paragraph (b)(1) of this provision). The offeror represents, as part of its offer, that--

(i) It ( ) is, ( ) is not a HUBZone small business concern listed, on the date of this representation, on the List of Qualified HUBZone Small Business Concerns maintained by the Small Business Administration, and no material change in ownership and control, principal office, or HUBZone employee percentage has occurred since it was certified by the Small Business Administration in accordance with 13 CFR Part 126; and

(ii) It ( ) is, ( ) is not a joint venture that complies with the requirements of 13 CFR Part 126, and the representation in paragraph (b)(6)(i) of this provision is accurate for the HUBZone small business concern or concerns that are participating in the joint venture. (The offeror shall enter the name or names of the HUBZone small business concern or concerns that are participating in the joint venture: _____.) Each HUBZone small business concern participating in the joint venture shall submit a separate signed copy of the HUBZone representation.

(7) (Complete if offeror represented itself as disadvantaged in paragraph (b)(2) of this provision.) The offeror shall check the category in which its ownership falls:

( ) Black American.

( ) Hispanic American.

( ) Native American (American Indians, Eskimos, Aleuts, or Native Hawaiians).

( ) Asian-Pacific American (persons with origins from Burma, Thailand, Malaysia, Indonesia, Singapore, Brunei, Japan, China, Taiwan, Laos, Cambodia (Kampuchea), Vietnam, Korea, The Philippines, U.S. Trust Territory of the Pacific Islands (Republic of Palau), Republic of the Marshall Islands, Federated States of Micronesia, the Commonwealth of the Northern Mariana Islands, Guam, Samoa, Macao, Hong Kong, Fiji, Tonga, Kiribati, Tuvalu, or Nauru).

( ) Subcontinent Asian (Asian-Indian) American (persons with origins from India, Pakistan, Bangladesh, Sri Lanka, Bhutan, the Maldives Islands, or Nepal).

(c) Definitions. As used in this provision--

Service-disabled veteran-owned small business concern--

(1) Means a small business concern--

(i) Not less than 51 percent of which is owned by one or more service-disabled veterans or, in the case of any publicly owned business, not less than 51 percent of the stock of which is owned by one or more service-disabled veterans; and

(ii) The management and daily business operations of which are controlled by one or more service-disabled veterans or, in the case of a veteran with permanent and severe disability, the spouse or permanent caregiver of such veteran.

(2) Service-disabled veteran means a veteran, as defined in 38 U.S.C. 101(2), with a disability that is service-connected, as defined in 38 U.S.C. 101(16).

Small business concern means a concern, including its affiliates, that is independently owned and operated, not dominant in the field of operation in which it is bidding on Government contracts, and qualified as a small business under the criteria in 13 CFR Part 121 and the size standard in paragraph (a) of this provision.

Veteran-owned small business concern means a small business concern--

(1) Not less than 51 percent of which is owned by one or more veterans (as defined at 38 U.S.C. 101(2)) or, in the case of any publicly owned business, not less than 51 percent of the stock of which is owned by one or more veterans; and

(2) The management and daily business operations of which are controlled by one or more veterans.

Women-owned small business concern means a small business concern --

(1) That is at least 51 percent owned by one or more women; in the case of any publicly owned business, at least 51 percent of the stock of which is owned by one or more women; and

(2) Whose management and daily business operations are controlled by one or more women.

(d) Notice.

(1) If this solicitation is for supplies and has been set aside, in whole or in part, for small business concerns, then the clause in this solicitation providing notice of the set-aside contains restrictions on the source of the end items to be furnished.

(2) Under 15 U.S.C. 645(d), any person who misrepresents a firm's status as a small, HUBZone small, small disadvantaged, or women-owned small business concern in order to obtain a contract to be awarded under the preference programs established pursuant to section 8(a), 8(d), 9, or 15 of the Small Business Act or any other provision of Federal law that specifically references section 8(d) for a definition of program eligibility, shall--

(i) Be punished by imposition of fine, imprisonment, or both;

(ii) Be subject to administrative remedies, including suspension and debarment; and

(iii) Be ineligible for participation in programs conducted under the authority of the Act.

(End of provision)

52.219-2 EQUAL LOW BIDS. (OCT 1995)

(a) This provision applies to small business concerns only.

(b) The bidder's status as a labor surplus area (LSA) concern may affect entitlement to award in case of tie bids. If the bidder wishes to be considered for this priority, the bidder must identify, in the following space, the LSA in which the costs to be incurred on account of manufacturing or production (by the bidder or the first-tier subcontractors) amount to more than 50 percent of the contract price.

_____

_____

(c) Failure to identify the labor surplus area as specified in paragraph (b) of this provision will preclude the bidder from receiving priority consideration. If the bidder is awarded a contract as a result of receiving priority consideration under this provision and would not have otherwise received award, the bidder shall

perform the contract or cause the contract to be performed in accordance with the obligations of an LSA concern.

52.219-19 SMALL BUSINESS CONCERN REPRESENTATION FOR THE SMALL BUSINESS COMPETITIVENESS DEMONSTRATION PROGRAM (OCT 2000)

(a) Definition.

"Emerging small business" as used in this solicitation, means a small business concern whose size is no greater than 50 percent of the numerical size standard applicable to the North American Industry Classification System (NAICS) code assigned to a contracting opportunity.

(b) [Complete only if the Offeror has represented itself under the provision at 52.219-1 as a small business concern under the size standards of this solicitation.] The Offeror [ ] is, [ ] is not an emerging small business.

(c) (Complete only if the Offeror is a small business or an emerging small business, indicating its size range.)

Offeror's number of employees for the past 12 months (check this column if size standard stated in solicitation is expressed in terms of number of employees) or Offeror's average annual gross revenue for the last 3 fiscal years (check this column if size standard stated in solicitation is expressed in terms of annual receipts). (Check one of the following.)

No. of Employees	Avg. Annual Gross Revenues
____ 50 or fewer	____ $1 million or less
____ 51 - 100	____ $1,000,001 - $2 million
____ 101 - 250	____ $2,000,001 - $3.5 million
____ 251 - 500	____ $3,500,001 - $5 million
____ 501 - 750	____ $5,000,001 - $10 million
____ 751 - 1,000	____ $10,000,001 - $17 million
____ Over 1,000	____ Over $17 million

(End of provision)

52.219-22 SMALL DISADVANTAGED BUSINESS STATUS (OCT 1999) ALTERNATE I (OCT 1998)

(a) General. This provision is used to assess an offeror's small disadvantaged business status for the purpose of obtaining a benefit on this solicitation. Status as a small business and status as a small disadvantaged business for general statistical purposes is covered by the provision at FAR 52.219-1, Small Business Program Representation.

(b) Representations.

(1) General. The offeror represents, as part of its offer, that it is a small business under the size standard applicable to this acquisition; and either--

___ (i) It has received certification by the Small Business Administration as a small disadvantaged business concern consistent with 13 CFR 124, Subpart B; and

(A) No material change in disadvantaged ownership and control has occurred since its certification;

(B) Where the concern is owned by one or more disadvantaged individuals, the net worth of each individual upon whom the certification is based does not exceed $750,000 after taking into account the applicable exclusions set forth at 13 CFR 124.104(c)(2); and

(C) It is identified , on the date of this representation, as a certifies small disadvantaged business concern in the database maintained by the Small Business Administration (PRO-Net); or

___ (ii) It has submitted a completed application to the Small Business Administration or a Private Certifier to be certified as a small disadvantaged business concern in accordance with 13 CFR 124, Subpart B, and a decision on that application is pending, and that no material change in disadvantaged ownership and control has occurred since its application was submitted.

(2)___ For Joint Ventures. The offeror represents, as part of its offer, that it is a joint venture that complies with the requirements at 13 CFR 124.1002(f) and that the representation in paragraph (b)(1) of this provision is accurate for the small disadvantaged business concern that is participating in the joint venture. [The offeror shall enter the name of the small disadvantaged business concern that is participating in the joint venture: _____.]

(3) Address. The offeror represents that its address_____is, _____is not in a region for which a small disadvantaged business procurement mechanism is authorized and its address has not changed since its certification as a small disadvantaged business concern or submission of its application for certification. The list of authorized small disadvantaged business procurement mechanisms and regions is posted at http://www.arnet.gov/References/ sdbadjustments.htm. The offeror shall use the list in effect on the date of this solicitation. ``Address," as used in this provision, means the address of the offeror as listed on the Small Business Administrations register of small disadvantaged business concerns or the address on the completed application that the concern has submitted to the Small Business Administration or a Private Certifier in accordance with 13 CFR part 124, subpart B. For joint ventures, ``address" refers to the address of the small disadvantaged business concern that is participating in the joint venture.

(c) Penalties and Remedies. Anyone who misrepresents any aspects of the disadvantaged status of a concern for the purposes of securing a contract or subcontract shall:

(1) Be punished by imposition of a fine, imprisonment, or both;

(2) Be subject to administrative remedies, including suspension and debarment; and

(3) Be ineligible for participation in programs conducted under the authority of the Small Business Act.

52.222-21 PROHIBITION OF SEGREGATED FACILITIES (FEB 1999)

(a) Segregated facilities, as used in this clause, means any waiting rooms, work areas, rest rooms and wash rooms, restaurants and other eating areas, time clocks, locker rooms and other storage or dressing areas, parking lots, drinking fountains, recreation or entertainment areas, transportation, and housing facilities provided for employees, that are segregated by explicit directive or are in fact segregated on the basis of race, color, religion, sex, or national origin because of written or oral policies or employee custom. The term does not include separate or single-user rest rooms or necessary dressing or sleeping areas provided to assure privacy between the sexes.

(b) The Contractor agrees that it does not and will not maintain or provide for its employees any segregated facilities at any of its establishments, and that it does not and will not permit its employees to perform their services at any location under its control where segregated facilities are maintained. The Contractor agrees that a breach of this clause is a violation of the Equal Opportunity clause in this contract.

(c) The Contractor shall include this clause in every subcontract and purchase order that is subject to the Equal Opportunity clause of this contract.

(End of clause)

52.222-22 PREVIOUS CONTRACTS AND COMPLIANCE REPORTS (FEB 1999)

The offeror represents that --

(a) [ ] It has, [ ] has not participated in a previous contract or subcontract subject to the Equal Opportunity clause of this solicitation;

(b) [ ] It has, [ ] has not, filed all required compliance reports; and

(c) Representations indicating submission of required compliance reports, signed by proposed subcontractors, will be obtained before subcontract awards.

(End of provision)

52.223-13 CERTIFICATION OF TOXIC CHEMICAL RELEASE REPORTING (OCT 2000)

(a) Submission of this certification is a prerequisite for making or entering into this contract imposed by Executive Order 12969, August 8, 1995.

(b) By signing this offer, the offeror certifies that--

(1) As the owner or operator of facilities that will be used in the performance of this contract that are subject to the filing and reporting requirements described in section 313 of the Emergency Planning and Community Right-to-Know Act of 1986 (EPCRA) (42 U.S.C. 11023) and section 6607 of the Pollution Prevention Act of 1990 (PPA) (42 U.S.C. 13106), the offeror will file and continue to file for such facilities for the life of the contract the Toxic Chemical Release Inventory Form (Form R) as described in sections 313(a) and (g) of EPCRA and section 6607 of PPA; or

(2) None of its owned or operated facilities to be used in the performance of this contract is subject to the Form R filing and reporting requirements because each such facility is exempt for at least one of the following reasons: (Check each block that is applicable.)

[ ] (i) The facility does not manufacture, process or otherwise use any toxic chemicals listed under section 313(c) of EPCRA, 42 U.S.C. 11023(c);

[ ] (ii) The facility does not have 10 or more full-time employees as specified in section 313.(b)(1)(A) of EPCRA 42 U.S.C. 11023(b)(1)(A);

[ ] (iii) The facility does not meet the reporting thresholds of toxic chemicals established under section 313(f) of EPCRA, 42 U.S.C. 11023(f) (including the alternate thresholds at 40 CFR 372.27, provided an appropriate certification form has been filed with EPA);

[ ] (iv) The facility does not fall within Standard Industrial Classification Code (SIC) major groups 20 through 39 or their corresponding North American Industry Classification System (NAICS) sectors 31 through 33; or

[ ] (v) The facility is not located within any State of the United States, the District of Columbia, the Commonwealth of Puerto Rico, Guam, American Samoa, the United States Virgin Islands, the Northern Mariana Islands, or any other territory or possession over which the United States has jurisdiction.

252.204-7001 COMMERCIAL AND GOVERNMENT ENTITY (CAGE) CODE REPORTING (AUG 1999)

(a) The offeror is requested to enter its CAGE code on its offer in the block with its name and address. The CAGE code entered must be for that name and address. Enter “CAGE” before the number.

(b) If the offeror does not have a CAGE code, it may ask the Contracting Officer to request one from the Defense Logistics Information Service (DLIS). The Contracting Officer will--

(1) Ask the Contractor to complete section B of a DD Form 2051, Request for Assignment of a Commercial and Government Entity (CAGE) Code;

(2) Complete section A and forward the form to DLIS; and

(3) Notify the Contractor of its assigned CAGE code.

(c) Do not delay submission of the offer pending receipt of a CAGE code.

(End of provision)

252.204-7004 REQUIRED CENTRAL CONTRACTOR REGISTRATION.(MAR 2000)

(a) Definitions.

As used in this clause--

(1) Central Contractor Registration (CCR) database means the primary DoD repository for contractor information required for the conduct of business with DoD.

(2) Data Universal Numbering System (DUNS) number means the 9-digit number assigned by Dun and Bradstreet Information Services to identify unique business entities.

(3) Data Universal Numbering System +4 (DUNS+4) number means the DUNS number assigned by Dun and Bradstreet plus a 4-digit suffix that may be assigned by a parent (controlling) business concern. This 4-digit suffix may be assigned at the discretion of the parent business concern for such purposes as identifying subunits or affiliates of the parent business concern.

(4) Registered in the CCR database means that all mandatory information, including the DUNS number or the DUNS+4 number, if applicable, and the corresponding Commercial and Government Entity (CAGE) code, is in the CCR database; the DUNS number and the CAGE code have been validated; and all edits have been successfully completed.

(b)(1) By submission of an offer, the offeror acknowledges the requirement that a prospective awardee must be registered in the CCR database prior to award, during performance, and through final payment of any contract resulting from this solicitation, except for awards to foreign vendors for work to be performed outside the United States.

(2) The offeror shall provide its DUNS or, if applicable, its DUNS+4 number with its offer, which will be used by the Contracting Officer to verify that the offeror is registered in the CCR database.

(3) Lack of registration in the CCR database will make an offeror ineligible for award.

(4) DoD has established a goal of registering an applicant in the CCR database within 48 hours after receipt of a complete and accurate application via the Internet. However, registration of an applicant submitting an application through a method other than the Internet may take up to 30 days. Therefore, offerors that are not registered should consider applying for registration immediately upon receipt of this solicitation.

(c) The Contractor is responsible for the accuracy and completeness of the data within the CCR, and for any liability resulting from the Government's reliance on inaccurate or incomplete data. To remain registered in the CCR database after the initial registration, the Contractor is required to confirm on an annual basis that its information in the CCR database is accurate and complete.

(d) Offerors and contractors may obtain information on registration and annual confirmation requirements by calling 1-888-227-2423, or via the Internet at http://www.ccr2000.com.

(End of clause)

252.209-7001 DISCLOSURE OF OWNERSHIP OR CONTROL BY THE GOVERNMENT OF A TERRORIST COUNTRY (MAR 1998)

(a) "Definitions."

As used in this provision --

(a) "Government of a terrorist country" includes the state and the government of a terrorist country, as well as any political subdivision, agency, or instrumentality thereof.

(2) "Terrorist country" means a country determined by the Secretary of State, under section 6(j)(1)(A) of the Export Administration Act of 1979 (50 U.S.C. App. 2405(j)(i)(A)), to be a country the government of which has repeatedly provided support for such acts of international terrorism. As of the date of this provision, terrorist countries include: Cuba, Iran, Iraq, Libya, North Korea, Sudan, and Syria.

(3) "Significant interest" means --

(i) Ownership of or beneficial interest in 5 percent or more of the firm's or subsidiary's securities. Beneficial interest includes holding 5 percent or more of any class of the firm's securities in "nominee shares," "street names," or some other method of holding securities that does not disclose the beneficial owner;

(ii) Holding a management position in the firm, such as a director or officer;

(iii) Ability to control or influence the election, appointment, or tenure of directors or officers in the firm;

(iv) Ownership of 10 percent or more of the assets of a firm such as equipment, buildings, real estate, or other tangible assets of the firm; or

(v) Holding 50 percent or more of the indebtness of a firm.

(b) "Prohibition on award."

In accordance with 10 U.S.C. 2327, no contract may be awarded to a firm or a subsidiary of a firm if the government of a terrorist country has a significant interest in the firm or subsidiary or, in the case of a

subsidiary, the firm that owns the subsidiary, unless a waiver is granted by the Secretary of Defense.

(c) "Disclosure."

If the government of a terrorist country has a significant interest in the Offeror or a subsidiary of the Offeror, the Offeror shall disclosure such interest in an attachment to its offer. If the Offeror is a subsidiary, it shall also disclose any significant interest the government of a terrorist country has in any firm that owns or controls the subsidiary. The disclosure shall include --

(1) Identification of each government holding a significant interest; and

(2) A description of the significant interest held by each government.

(End of provision)

252.247-7022 REPRESENTATION OF EXTENT OF TRANSPORTATION BY SEA (AUG 1992)

(a) The Offeror shall indicate by checking the appropriate blank in paragraph (b) of this provision whether transportation of supplies by sea is anticipated under the resultant contract. The term supplies is defined in the Transportation of Supplies by Sea clause of this solicitation.

(b) Representation. The Offeror represents that it:

____ (1) Does anticipate that supplies will be transported by sea in the performance of any contract or subcontract resulting from this solicitation.

____ (2) Does not anticipate that supplies will be transported by sea in the performance of any contract or subcontract resulting from this solicitation.

(c) Any contract resulting from this solicitation will include the Transportation of Supplies by Sea clause. If the Offeror represents that it will not use ocean transportation, the resulting contract will also include the Defense FAR Supplement clause at 252.247-7024, Notification of Transportation of Supplies by Sea.

(End of provision)

SECTION 00700 Contract Clauses

52.202-1 DEFINITIONS. (MAY 2001)..... 4
52.203-3 GRATUITIES (APR 1984)..... 5
52.203-5 COVENANT AGAINST CONTINGENT FEES (APR 1984)..... 5
52.203-6 RESTRICTIONS ON SUBCONTRACTOR SALES TO THE GOVERNMENT (JUL 1995)..... 6
52.203-7 ANTI-KICKBACK PROCEDURES. (JUL 1995)..... 6
52.203-8 CANCELLATION, RESCISSION, AND RECOVERY OF FUNDS FOR ILLEGAL OR IMPROPER ACTIVITY (JAN 1997)..... 7
52.203-10 PRICE OR FEE ADJUSTMENT FOR ILLEGAL OR IMPROPER ACTIVITY (JAN 1997)..... 8
52.203-12 LIMITATION ON PAYMENTS TO INFLUENCE CERTAIN FEDERAL TRANSACTIONS (JUN 1997)..... 9
52.204-1 APPROVAL OF CONTRACT (DEC 1989)..... 13
52.204-4 PRINTED OR COPIED DOUBLE-SIDED ON RECYCLED PAPER (AUG 2000)..... 13
52.209-6 Protecting the Government's Interest When Subcontracting With Contractors Debarred, Suspended, or Proposed for Debarment (JUL 1995)..... 14
52.214-26 Audit and Records--Sealed Bidding. (OCT 1997)..... 14
52.214-27 Price Reduction for Defective Cost or Pricing Data - Modifications - Sealed Bidding. (OCT 1997).. 15
52.214-28 Subcontractor Cost or Pricing Data - Modifications - Sealed Bidding. (OCT 1997)..... 16
52.215-19 NOTIFICATION OF OWNERSHIP CHANGES (OCT 1997)..... 17
52.219-8 UTILIZATION OF SMALL BUSINESS CONCERNS (OCT 2000)..... 18
52.219-14 LIMITATIONS ON SUBCONTRACTING (DEC 1996)..... 19
52.219-25 SMALL DISADVANTAGED BUSINESS PARTICIPATION PROGRAM—DISADVANTAGED STATUS AND REPORTING (OCT 1999)..... 19
52.222-3 Convict Labor (Aug 1996)..... 20
52.222-4 Contract Work Hours and Safety Standards Act - Overtime Compensation. (SEP 2000)..... 20
52.222-6 DAVIS-BACON ACT (FEB 1995)..... 21
52.222-7 WITHHOLDING OF FUNDS (FEB 1988)..... 22
52.222-8 PAYROLLS AND BASIC RECORDS (FEB 1988)..... 22
52.222-9 APPRENTICES AND TRAINEES (FEB 1988)..... 23
52.222-10 COMPLIANCE WITH COPELAND ACT REQUIREMENTS (FEB 1988)..... 24
52.222-11 SUBCONTRACTS (LABOR STANDARDS (FEB 1988)..... 24
52.222-12 CONTRACT TERMINATION--DEBARMENT (FEB 1988)..... 25
52.222-13 COMPLIANCE WITH DAVIS-BACON AND RELATED ACT REGULATIONS (FEB 1988)..... 25
52.222-14 DISPUTES CONCERNING LABOR STANDARDS (FEB 1988)..... 25
52.222-15 CERTIFICATION OF ELIGIBILITY (FEB 1988)..... 25
52.222-26 EQUAL OPPORTUNITY (FEB 1999)..... 26
52.222-27 AFFIRMATIVE ACTION COMPLIANCE REQUIREMENTS FOR CONSTRUCTION (FEB 1999)..... 27
52.222-36 AFFIRMATIVE ACTION FOR WORKERS WITH DISABILITIES (JUN 1998)..... 32
52.222-37 EMPLOYMENT REPORTS ON DISABLED VETERANS AND VETERANS OF THE VIETNAM ERA (JAN 1999)..... 34
52.223-5 POLLUTION PREVENTION AND RIGHT-TO-KNOW INFORMATION (APR 1998)..... 34
52.223-6 DRUG-FREE WORKPLACE (MAY 2001)..... 34
52.223-14 TOXIC CHEMICAL RELEASE REPORTING (OCT 2000)..... 36
52.225-11 BUY AMERICAN ACT--BALANCE OF PAYMENTS PROGRAM--CONSTRUCTION MATERIALS UNDER TRADE AGREEMENTS (FEB 2000)..... 37
52.225-13 RESTRICTIONS ON CERTAIN FOREIGN PURCHASES (JUL 2000)..... 40
52.227-1 AUTHORIZATION AND CONSENT (JUL 1995)..... 40
52.227-2 NOTICE AND ASSISTANCE REGARDING PATENT AND COPYRIGHT INFRINGEMENT (AUG 1996)..... 40
52.227-4 PATENT INDEMNITY--CONSTRUCTION CONTRACTS (APR 1984)..... 41
52.228-11 PLEDGES OF ASSETS (FEB 1992)..... 41
52.229-3 FEDERAL, STATE, AND LOCAL TAXES (JAN 1991)..... 42

52.229-5 TAXES--CONTRACTS PERFORMED IN U.S. POSSESSIONS OR PUERTO RICO (APR 1984).... 43
52.232-5 PAYMENTS UNDER FIXED-PRICE CONSTRUCTION CONTRACTS (MAY 1997)..... 43
52.232-17 INTEREST (JUNE 1996)..... 45
52.232-23 ASSIGNMENT OF CLAIMS (JAN 1986)..... 46
52.232-27 PROMPT PAYMENT FOR CONSTRUCTION CONTRACTS (MAY 2001)..... 46
52.232-29 Terms for Financing of Purchases of Commercial Items. (OCT 1995)..... 52
52.232-33 PAYMENT BY ELECTRONIC FUNDS TRANSFER—CENTRAL CONTRACTOR REGISTRATION (MAY 1999)..... 53
52.233-1 Disputes. (DEC 1998)..... 55
52.233-3 PROTEST AFTER AWARD (AUG. 1996)..... 56
52.236-2 DIFFERING SITE CONDITIONS (APR 1984)..... 57
52.236-3 SITE INVESTIGATION AND CONDITIONS AFFECTING THE WORK (APR 1984) 57
52.236-5 MATERIAL AND WORKMANSHIP (APR 1984)..... 58
52.236-6 SUPERINTENDENCE BY THE CONTRACTOR (APR 1984)..... 58
52.236-7 PERMITS AND RESPONSIBILITIES (NOV 1991)..... 58
52.236-8 OTHER CONTRACTS (APR 1984)..... 58
52.236-9 PROTECTION OF EXISTING VEGETATION, STRUCTURES, EQUIPMENT, UTILITIES, AND IMPROVEMENTS (APR 1984)..... 59
52.236-10 OPERATIONS AND STORAGE AREAS (APR 1984)..... 59
52.236-11 USE AND POSSESSION PRIOR TO COMPLETION (APR 1984)..... 59
52.236-12 CLEANING UP (APR 1984)..... 60
52.236-13 ACCIDENT PREVENTION (NOV 1991)..... 60
52.236-15 SCHEDULES FOR CONSTRUCTION CONTRACTS (APR 1984)..... 60
52.236-17 LAYOUT OF WORK (APR 1984)..... 61
52.236-21 SPECIFICATIONS AND DRAWINGS FOR CONSTRUCTION (FEB 1997)..... 61
52.236-26 PRECONSTRUCTION CONFERENCE (FEB 1995)..... 62
52.242-13 Bankruptcy (JUL 1995)..... 62
52.242-14 SUSPENSION OF WORK (APR 1984)..... 62
52.243-4 CHANGES (AUG 1987)..... 63
52.246-12 INSPECTION OF CONSTRUCTION (AUG 1996)..... 64
52.246-21 WARRANTY OF CONSTRUCTION (MAR 1994)..... 65
52.248-3 VALUE ENGINEERING--CONSTRUCTION (FEB 2000)..... 66
52.249-2 TERMINATION FOR CONVENIENCE OF THE GOVERNMENT (FIXED-PRICE) (SEP 1996)..... 68
52.249-10 DEFAULT (FIXED-PRICE CONSTRUCTION) (APR 1984)..... 71
52.252-2 CLAUSES INCORPORATED BY REFERENCE (FEB 1998)..... 72
52.252-4 ALTERATIONS IN CONTRACT (APR 1984)..... 72
52.252-6 AUTHORIZED DEVIATIONS IN CLAUSES (APR 1984)..... 72
52.253-1 COMPUTER GENERATED FORMS (JAN 1991)..... 72
252.201-7000 CONTRACTING OFFICER'S REPRESENTATIVE (DEC 1991)..... 73
252.203-7001 PROHIBITION ON PERSONS CONVICTED OF FRAUD OR OTHER DEFENSE-CONTRACT-RELATED FELONIES (MAR 1999)..... 73
252.203-7002 DISPLAY OF DOD HOTLINE POSTER (DEC 1991)..... 74
252.204-7000 DISCLOSURE OF INFORMATION (DEC 1991)..... 74
252.205-7000 PROVISION OF INFORMATION TO COOPERATIVE AGREEMENT HOLDERS (DEC 1991) 75
252.209-7000 ACQUISITION FROM SUBCONTRACTORS SUBJECT TO ONSITE INSPECTION UNDER THE INTERMEDIATE-RANGE NUCLEAR FORCES (INF) TREATY (NOV 1995)..... 75
252.219-7009 SECTION 8(A) DIRECT AWARD (JUN 1998)..... 75
252.223-7004 DRUG-FREE WORK FORCE (SEP 1988)..... 76
252.225-7012 Preference for Certain Domestic Commodities (AUG 2000)..... 77
252.225-7031 SECONDARY ARAB BOYCOTT OF ISRAEL (JUN 1992)..... 78
252.227-7000 Non-estoppel. (OCT 1966)..... 79
252.227-7022 GOVERNMENT RIGHTS (UNLIMITED) (MAR 1979)..... 79
252.227-7023 DRAWINGS AND OTHER DATA TO BECOME PROPERTY OF GOVERNMENT. (MAR 1979)..... 79
252.227-7033 RIGHTS IN SHOP DRAWINGS (APR 1966)..... 79

252.231-7000 SUPPLEMENTAL COST PRINCIPLES (DEC 1991) 79
252.236-7000 MODIFICATION PROPOSALS - PRICE BREAKDOWN. (DEC 1991) 79
252.236-7008 CONTRACT PRICES - BIDDING SCHEDULES. (DEC 1991) 80
252.242-7000 POSTAWARD CONFERENCE (DEC 1991) 80
252.243-7001 PRICING OF CONTRACT MODIFICATIONS (DEC 1991) 80
252.243-7002 REQUESTS FOR EQUITABLE ADJUSTMENT (MAR 1998) 80
252.247-7024 Notification of Transportation of Supplies by Sea (MAR 2000) 82

SECTION 00700

52.202-1 DEFINITIONS. (MAY 2001)

(a) Agency head or head of the agency means the Secretary (Attorney General, Administrator, Governor, Chairperson, or other chief official, as appropriate) of the agency, unless otherwise indicated, including any deputy or assistant chief official of the executive agency.

(b) Commercial component means any component that is a commercial item.

(c) Commercial item means--

(1) Any item, other than real property, that is of a type customarily used for nongovernmental purposes and that--

(i) Has been sold, leased, or licensed to the general public; or

(ii) Has been offered for sale, lease, or license to the general public;

(2) Any item that evolved from an item described in paragraph (c)(1) of this clause through advances in technology or performance and that is not yet available in the commercial marketplace, but will be available in the commercial marketplace in time to satisfy the delivery requirements under a Government solicitation;

(3) Any item that would satisfy a criterion expressed in paragraphs (c)(1) or (c)(2) of this clause, but for--

(i) Modifications of a type customarily available in the commercial marketplace; or

(ii) Minor modifications of a type not customarily available in the commercial marketplace made to meet Federal Government requirements. "Minor" modifications means modifications that do not significantly alter the nongovernmental function or essential physical characteristics of an item or component, or change the purpose of a process. Factors to be considered in determining whether a modification is minor include the value and size of the modification and the comparative value and size of the final product. Dollar values and percentages may be used as guideposts, but are not conclusive evidence that a modification is minor;

(4) Any combination of items meeting the requirements of paragraphs (c)(1), (2), (3), or (5) of this clause that are of a type customarily combined and sold in combination to the general public;

(5) Installation services, maintenance services, repair services, training services, and other services if such services are procured for support of an item referred to in paragraphs (c)(1), (2), (3), or (4) of this clause, and if the source of such services--

(i) Offers such services to the general public and the Federal Government contemporaneously and under similar terms and conditions; and

(ii) Offers to use the same work force for providing the Federal Government with such services as the source uses for providing such services to the general public;

(6) Services of a type offered and sold competitively in substantial quantities in the commercial marketplace based on established catalog or market prices for specific tasks performed under standard commercial terms and conditions. This does not include services that are sold based on hourly rates without an established catalog or market price for a specific service performed;

(7) Any item, combination of items, or service referred to in subparagraphs (c)(1) through (c)(6), notwithstanding the fact that the item, combination of items, or service is transferred between or among separate divisions, subsidiaries, or affiliates of a Contractor; or

(8) A nondevelopmental item, if the procuring agency determines the item was developed exclusively at private expense and sold in substantial quantities, on a competitive basis, to multiple State and local Governments.

(d) Component means any item supplied to the Government as part of an end item or of another component, except that for use in 52.225-9, and 52.225-11 see the definitions in 52.225-9(a) and 52.225-11(a).

(e) Contracting Officer means a person with the authority to enter into, administer, and/or terminate contracts and make related determinations and findings. The term includes certain authorized representatives of the Contracting Officer acting within the limits of their authority as delegated by the Contracting Officer.

(f) Nondevelopmental item means--

(1) Any previously developed item of supply used exclusively for governmental purposes by a Federal agency, a State or local government, or a foreign government with which the United States has a mutual defense cooperation agreement;

(2) Any item described in paragraph (f)(1) of this definition that requires only minor modification or modifications of a type customarily available in the commercial marketplace in order to meet the requirements of the procuring department or agency; or

(3) Any item of supply being produced that does not meet the requirements of paragraph (f)(1) or (f)(2) solely because the item is not yet in use.

(g) Except as otherwise provided in this contract, the term "subcontracts" includes, but is not limited to, purchase orders and changes and modifications to purchase orders under this contract.

(End of clause)

52.203-3 GRATUITIES (APR 1984)

(a) The right of the Contractor to proceed may be terminated by written notice if, after notice and hearing, the agency head or a designee determines that the Contractor, its agent, or another representative--

(1) Offered or gave a gratuity (e.g., an entertainment or gift) to an officer, official, or employee of the Government; and

(2) Intended, by the gratuity, to obtain a contract or favorable treatment under a contract.

(b) The facts supporting this determination may be reviewed by any court having lawful jurisdiction.

(c) If this contract is terminated under paragraph (a) of this clause, the Government is entitled--

(1) To pursue the same remedies as in a breach of the contract; and

(2) In addition to any other damages provided by law, to exemplary damages of not less than 3 nor more than 10 times the cost incurred by the Contractor in giving gratuities to the person concerned, as determined by the agency head or a designee. (This subparagraph (c)(2) is applicable only if this contract uses money appropriated to the Department of Defense.)

(d) The rights and remedies of the Government provided in this clause shall not be exclusive and are in addition to any other rights and remedies provided by law or under this contract.

(End of clause)

52.203-5 COVENANT AGAINST CONTINGENT FEES (APR 1984)

(a) The Contractor warrants that no person or agency has been employed or retained to solicit or obtain this contract upon an agreement or understanding for a contingent fee, except a bona fide employee or agency. For breach or violation of this warranty, the Government shall have the right to annul this contract without liability or, in its discretion, to deduct from the contract price or consideration, or otherwise recover, the full amount of the contingent fee.

(b) "Bona fide agency," as used in this clause, means an established commercial or selling agency, maintained by a contractor for the purpose of securing business, that neither exerts nor proposes to exert improper influence to solicit or obtain Government contracts nor holds itself out as being able to obtain any Government contract or contracts through improper influence.

"Bona fide employee," as used in this clause, means a person, employed by a contractor and subject to the contractor's supervision and control as to time, place, and manner of performance, who neither exerts nor proposes to exert improper influence to solicit or obtain Government contracts nor holds out as being able to obtain any Government contract or contracts through improper influence.

"Contingent fee," as used in this clause, means any commission, percentage, brokerage, or other fee that is contingent upon the success that a person or concern has in securing a Government contract.

"Improper influence," as used in this clause, means any influence that induces or tends to induce a Government employee or officer to give consideration or to act regarding a Government contract on any basis other than the merits of the matter.

(End of clause)

52.203-6 RESTRICTIONS ON SUBCONTRACTOR SALES TO THE GOVERNMENT (JUL 1995)

(a) Except as provided in (b) of this clause, the Contractor shall not enter into any agreement with an actual or prospective subcontractor, nor otherwise act in any manner, which has or may have the effect of restricting sales by such subcontractors directly to the Government of any item or process (including computer software) made or furnished by the subcontractor under this contract or under any follow-on production contract.

(b) The prohibition in (a) of this clause does not preclude the Contractor from asserting rights that are otherwise authorized by law or regulation.

(c) The Contractor agrees to incorporate the substance of this clause, including this paragraph (c), in all subcontracts under this contract which exceed $100,000.

52.203-7 ANTI-KICKBACK PROCEDURES (JUL 1995)

(a) Definitions.

"Kickback," as used in this clause, means any money, fee, commission, credit, gift, gratuity, thing of value, or compensation of any kind which is provided, directly or indirectly, to any prime Contractor, prime Contractor employee, subcontractor, or subcontractor employee for the purpose of improperly obtaining or rewarding favorable treatment in connection with a prime contract or in connection with a subcontract relating to a prime contract.

"Person," as used in this clause, means a corporation, partnership, business association of any kind, trust, joint-stock company, or individual.

"Prime contract," as used in this clause, means a contract or contractual action entered into by the United States for the purpose of obtaining supplies, materials, equipment, or services of any kind.

"Prime Contractor," as used in this clause, means a person who has entered into a prime contract with the United

States.

"Prime Contractor employee," as used in this clause, means any officer, partner, employee, or agent of a prime Contractor.

"Subcontract," as used in this clause, means a contract or contractual action entered into by a prime Contractor or subcontractor for the purpose of obtaining supplies, materials, equipment, or services of any kind under a prime contract.

"Subcontractor," as used in this clause, (1) means any person, other than the prime Contractor, who offers to furnish or furnishes any supplies, materials, equipment, or services of any kind under a prime contract or a subcontract entered into in connection with such prime contract, and (2) includes any person who offers to furnish or furnishes general supplies to the prime Contractor or a higher tier subcontractor.

"Subcontractor employee," as used in this clause, means any officer, partner, employee, or agent of a subcontractor.

(b) The Anti-Kickback Act of 1986 (41 U.S.C. 51-58) (the Act), prohibits any person from -

(1) Providing or attempting to provide or offering to provide any kickback;

(2) Soliciting, accepting, or attempting to accept any kickback; or

(3) Including, directly or indirectly, the amount of any kickback in the contract price charged by a prime Contractor to the United States or in the contract price charged by a subcontractor to a prime Contractor or higher tier subcontractor.

(c)(1) The Contractor shall have in place and follow reasonable procedures designed to prevent and detect possible violations described in paragraph (b) of this clause in its own operations and direct business relationships.

(2) When the Contractor has reasonable grounds to believe that a violation described in paragraph (b) of this clause may have occurred, the Contractor shall promptly report in writing the possible violation. Such reports shall be made to the inspector general of the contracting agency, the head of the contracting agency if the agency does not have an inspector general, or the Department of Justice.

(3) The Contractor shall cooperate fully with any Federal agency investigating a possible violation described in paragraph (b) of this clause.

(4) The Contracting Officer may (i) offset the amount of the kickback against any monies owed by the United States under the prime contract and/or (ii) direct that the Prime Contractor withhold, from sums owed a subcontractor under the prime contract, the amount of any kickback. The Contracting Officer may order the monies withheld under subdivision (c)(4)(ii) of this clause be paid over to the Government unless the Government has already offset those monies under subdivision (c)(4)(i) of this clause. In either case, the Prime Contractor shall notify the Contracting Officer when the monies are withheld.

(5) The Contractor agrees to incorporate the substance of this clause, including this subparagraph (c)(5) but excepting subparagraph (c)(1), in all subcontracts under this contract which exceed $100,000.

52.203-8 CANCELLATION, RESCISSION, AND RECOVERY OF FUNDS FOR ILLEGAL OR IMPROPER ACTIVITY (JAN 1997)

(a) If the Government receives information that a contractor or a person has engaged in conduct constituting a violation of subsection (a), (b), (c), or (d) of Section 27 of the Office of Federal Procurement Policy Act (41 U.S.C. 423) (the Act), as amended by section 4304 of the 1996 National Defense Authorization Act for Fiscal Year 1996

(Pub. L. 104-106), the Government may--

(1) Cancel the solicitation, if the contract has not yet been awarded or issued; or

(2) Rescind the contract with respect to which--

(i) The Contractor or someone acting for the Contractor has been convicted for an offense where the conduct constitutes a violation of subsection 27 (a) or (b) of the Act for the purpose of either--

(A) Exchanging the information covered by such subsections for anything of value; or

(B) Obtaining or giving anyone a competitive advantage in the award of a Federal agency procurement contract; or

(ii) The head of the contracting activity has determined, based upon a preponderance of the evidence, that the Contractor or someone acting for the Contractor has engaged in conduct constituting an offense punishable under subsections 27(e)(1) of the Act.

(b) If the Government rescinds the contract under paragraph (a) of this clause, the Government is entitled to recover, in addition to any penalty prescribed by law, the amount expended under the contract.

(c) The rights and remedies of the Government specified herein are not exclusive, and are in addition to any other rights and remedies provided by law, regulation, or under this contract.

52.203-10 PRICE OR FEE ADJUSTMENT FOR ILLEGAL OR IMPROPER ACTIVITY (JAN 1997)

(a) The Government, at its election, may reduce the price of a fixed-price type contract and the total cost and fee under a cost-type contract by the amount of profit or fee determined as set forth in paragraph (b) of this clause if the head of the contracting activity or designee determines that there was a violation of subsection 27 (a), (b), or (c) of the Office of Federal Procurement Policy Act, as amended (41 U.S.C. 423), as implemented in section 3.104 of the Federal Acquisition Regulation.

(b) The price or fee reduction referred to in paragraph (a) of this clause shall be--

(1) For cost-plus-fixed-fee contracts, the amount of the fee specified in the contract at the time of award;

(2) For cost-plus-incentive-fee contracts, the target fee specified in the contract at the time of award, notwithstanding any minimum fee or "fee floor" specified in the contract;

(3) For cost-plus-award-fee contracts--

(i) The base fee established in the contract at the time of contract award;

(ii) If no base fee is specified in the contract, 30 percent of the amount of each award fee otherwise payable to the Contractor for each award fee evaluation period or at each award fee determination point.

(4) For fixed-price-incentive contracts, the Government may--

(i) Reduce the contract target price and contract target profit both by an amount equal to the initial target profit specified in the contract at the time of contract award; or

(ii) If an immediate adjustment to the contract target price and contract target profit would have a significant adverse impact on the incentive price revision relationship under the contract, or adversely affect the contract financing provisions, the Contracting Officer may defer such adjustment until establishment of the total final price of the contract. The total final price established in accordance with the incentive price revision provisions of the contract

shall be reduced by an amount equal to the initial target profit specified in the contract at the time of contract award and such reduced price shall be the total final contract price.

(5) For firm-fixed-price contracts, by 10 percent of the initial contract price or a profit amount determined by the Contracting Officer from records or documents in existence prior to the date of the contract award.

(c) The Government may, at its election, reduce a prime contractor's price or fee in accordance with the procedures of paragraph (b) of this clause for violations of the Act by its subcontractors by an amount not to exceed the amount of profit or fee reflected in the subcontract at the time the subcontract was first definitively priced.

(d) In addition to the remedies in paragraphs (a) and (c) of this clause, the Government may terminate this contract for default. The rights and remedies of the Government specified herein are not exclusive, and are in addition to any other rights and remedies provided by law or under this contract.

(End of clause)

52.203-12 LIMITATION ON PAYMENTS TO INFLUENCE CERTAIN FEDERAL TRANSACTIONS (JUN 1997)

(a) Definitions.

"Agency," as used in this clause, means executive agency as defined in 2.101.

"Covered Federal action," as used in this clause, means any of the following Federal actions:

(1) The awarding of any Federal contract.

(2) The making of any Federal grant.

(3) The making of any Federal loan.

(4) The entering into of any cooperative agreement.

(5) The extension, continuation, renewal, amendment, or modification of any Federal contract, grant, loan, or cooperative agreement.

"Indian tribe" and "tribal organization," as used in this clause, have the meaning provided in section 4 of the Indian Self-Determination and Education Assistance Act (25 U.S.C. 450B) and include Alaskan Natives.

"Influencing or attempting to influence," as used in this clause, means making, with the intent to influence, any communication to or appearance before an officer or employee of any agency, a Member of Congress, an officer or employee of Congress, or an employee of a Member of Congress in connection with any covered Federal action.

"Local government," as used in this clause, means a unit of government in a State and, if chartered, established, or otherwise recognized by a State for the performance of a governmental duty, including a local public authority, a special district, an intrastate district, a council of governments, a sponsor group representative organization, and any other instrumentality of a local government.

"Officer or employee of an agency," as used in this clause, includes the following individuals who are employed by an agency:

(1) An individual who is appointed to a position in the Government under title 5, United States Code, including a position under a temporary appointment.

(2) A member of the uniformed services, as defined in subsection 101(3), title 37, United States Code.

(3) A special Government employee, as defined in section 202, title 18, United States Code.

(4) An individual who is a member of a Federal advisory committee, as defined by the Federal Advisory Committee Act, title 5, United States Code, appendix 2.

"Person," as used in this clause, means an individual, corporation, company, association, authority, firm, partnership, society, State, and local government, regardless of whether such entity is operated for profit, or not for profit. This term excludes an Indian tribe, tribal organization, or any other Indian organization with respect to expenditures specifically permitted by other Federal law.

"Reasonable compensation," as used in this clause, means, with respect to a regularly employed officer or employee of any person, compensation that is consistent with the normal compensation for such officer or employee for work that is not furnished to, not funded by, or not furnished in cooperation with the Federal Government.

"Reasonable payment," as used in this clause, means, with respect to professional and other technical services, a payment in an amount that is consistent with the amount normally paid for such services in the private sector.

"Recipient," as used in this clause, includes the Contractor and all subcontractors. This term excludes an Indian tribe, tribal organization, or any other Indian organization with respect to expenditures specifically permitted by other Federal law.

"Regularly employed," as used in this clause, means, with respect to an officer or employee of a person requesting or receiving a Federal contract, an officer or employee who is employed by such person for at least 130 working days within 1 year immediately preceding the date of the submission that initiates agency consideration of such person for receipt of such contract. An officer or employee who is employed by such person for less than 130 working days within 1 year immediately preceding the date of the submission that initiates agency consideration of such person shall be considered to be regularly employed as soon as he or she is employed by such person for 130 working days.

"State," as used in this clause, means a State of the United States, the District of Columbia, the Commonwealth of Puerto Rico, a territory or possession of the United States, an agency or instrumentality of a State, and multi-State, regional, or interstate entity having governmental duties and powers.

(b) Prohibitions.

(1) Section 1352 of title 31, United States Code, among other things, prohibits a recipient of a Federal contract, grant, loan, or cooperative agreement from using appropriated funds to pay any person for influencing or attempting to influence an officer or employee of any agency, a Member of Congress, an officer or employee of Congress, or an employee of a Member of Congress in connection with any of the following covered Federal actions: the awarding of any Federal contract; the making of any Federal grant; the making of any Federal loan; the entering into of any cooperative agreement; or the modification of any Federal contract, grant, loan, or cooperative agreement.

(2) The Act also requires Contractors to furnish a disclosure if any funds other than Federal appropriated funds (including profit or fee received under a covered Federal transaction) have been paid, or will be paid, to any person for influencing or attempting to influence an officer or employee of any agency, a Member of Congress, an officer or employee of Congress, or an employee of a Member of Congress in connection with a Federal contract, grant, loan, or cooperative agreement.

(3) The prohibitions of the Act do not apply under the following conditions:

(i) Agency and legislative liaison by own employees.

(A) The prohibition on the use of appropriated funds, in subparagraph (b)(1) of this clause, does not apply in the case of a payment of reasonable compensation made to an officer or employee of a person requesting or receiving a covered Federal action if the payment is for agency and legislative liaison activities not directly related to a covered Federal action.

(B) For purposes of subdivision (b)(3)(i)(A) of this clause, providing any information specifically requested by an agency or Congress is permitted at any time.

(C) The following agency and legislative liaison activities are permitted at any time where they are not related to a specific solicitation for any covered Federal action:

(1) Discussing with an agency the qualities and characteristics (including individual demonstrations) of the person's products or services, conditions or terms of sale, and service capabilities.

(2) Technical discussions and other activities regarding the application or adaptation of theperson's products or services for an agency's use.

(D) The following agency and legislative liaison activities are permitted where they are prior to formal solicitation of any covered Federal action--

(1) Providing any information not specifically requested but necessary for an agency to make an informed decision about initiation of a covered Federal action;

(2) Technical discussions regarding the preparation of an unsolicited proposal prior to its official submission; and

(3) Capability presentations by persons seeking awards from an agency pursuant to the provisions of the Small Business Act, as amended by Pub. L. 95-507, and subsequent amendments.

(E) Only those services expressly authorized by subdivision (b)(3)(i)(A) of this clause are permitted under this clause.

(ii) Professional and technical services.

(A) The prohibition on the use of appropriated funds, in subparagraph (b)(1) of this clause, does not apply in the case of--

(1) A payment of reasonable compensation made to an officer or employee of a person requesting or receiving a covered Federal action or an extension, continuation, renewal, amendment, or modification of a covered Federal action, if payment is for professional or technical services rendered directly in the preparation, submission, or negotiation of any bid, proposal, or application for that Federal action or for meeting requirements imposed by or pursuant to law as a condition for receiving that Federal action.

(2) Any reasonable payment to a person, other than an officer or employee of a person requesting or receiving a covered Federal action or an extension, continuation, renewal, amendment, or modification of a covered Federal action if the payment is for professional or technical services rendered directly in the preparation, submission, or negotiation of any bid, proposal, or application for that Federal action or for meeting requirements imposed by or pursuant to law as a condition for receiving that Federal action. Persons other than officers or employees of a person requesting or receiving a covered Federal action include consultants and trade associations.

(B) For purposes of subdivision (b)(3)(ii)(A) of this clause, "professional and technical services" shall be limited to advice and analysis directly applying any professional or technical discipline. For example, drafting of a legal document accompanying a bid or proposal by a lawyer is allowable. Similarly, technical advice provided by an engineer on the performance or operational capability of a piece of equipment rendered directly in the negotiation of a contract is allowable. However, communications with the intent to influence made by a professional (such as a licensed lawyer) or a technical person (such as a licensed accountant) are not allowable under this section unless they provide advice and analysis directly applying their professional or technical expertise and unless the advice or analysis is rendered directly and solely in the preparation, submission or negotiation of a covered Federal action. Thus, for example, communications with the intent to influence made by a lawyer that do not provide legal advice or analysis directly and solely related to the legal aspects of his or her client's proposal, but generally advocate one proposal over another are not allowable under this section because the lawyer is not providing professional legal

services. Similarly, communications with the intent to influence made by an engineer providing an engineering analysis prior to the preparation or submission of a bid or proposal are not allowable under this section since the engineer is providing technical services but not directly in the preparation, submission or negotiation of a covered Federal action.

(C) Requirements imposed by or pursuant to law as a condition for receiving a covered Federal award include those required by law or regulation and any other requirements in the actual award documents.

(D) Only those services expressly authorized by subdivisions (b)(3)(ii)(A)(1) and (2) of this clause are permitted under this clause.

(E) The reporting requirements of FAR 3.803(a) shall not apply with respect to payments of reasonable compensation made to regularly employed officers or employees of a person.

(c) Disclosure.

(1) The Contractor who requests or receives from an agency a Federal contract shall file with that agency a disclosure form, OMB standard form LLL, Disclosure of Lobbying Activities, if such person has made or has agreed to make any payment using nonappropriated funds (to include profits from any covered Federal action), which would be prohibited under subparagraph (b)(1) of this clause, if paid for with appropriated funds.

(2) The Contractor shall file a disclosure form at the end of each calendar quarter in which there occurs any event that materially affects the accuracy of the information contained in any disclosure form previously filed by such person under subparagraph (c)(1) of this clause. An event that materially affects the accuracy of the information reported includes--

(i) A cumulative increase of $25,000 or more in the amount paid or expected to be paid for influencing or attempting to influence a covered Federal action; or

(ii) A change in the person(s) or individual(s) influencing or attempting to influence a covered Federal action; or

(iii) A change in the officer(s), employee(s), or Member(s) contacted to influence or attempt to influence a covered Federal action.

(3) The Contractor shall require the submittal of a certification, and if required, a disclosure form by any person who requests or receives any subcontract exceeding $100,000 under the Federal contract.

(4) All subcontractor disclosure forms (but not certifications) shall be forwarded from tier to tier until received by the prime Contractor. The prime Contractor shall submit all disclosures to the Contracting Officer at the end of the calendar quarter in which the disclosure form is submitted by the subcontractor. Each subcontractor certification shall be retained in the subcontract file of the awarding Contractor.

(d) Agreement. The Contractor agrees not to make any payment prohibited by this clause.

(e) Penalties.

(1) Any person who makes an expenditure prohibited under paragraph (a) of this clause or who fails to file or amend the disclosure form to be filed or amended by paragraph (b) of this clause shall be subject to civil penalties as provided for by 31 U.S.C. 1352. An imposition of a civil penalty does not prevent the Government from seeking any other remedy that may be applicable.

(2) Contractors may rely without liability on the representation made by their subcontractors in the certification and disclosure form.

(f) Cost allowability. Nothing in this clause makes allowable or reasonable any costs which would otherwise be unallowable or unreasonable. Conversely, costs made specifically unallowable by the requirements in this clause will not be made allowable under any other provision.

(End of clause)

52.204-1 APPROVAL OF CONTRACT (DEC 1989)

This contract is subject to the written approval of the Contracting Officer and shall not be binding until so approved.

(End of clause)

52.204-4 PRINTED OR COPIED DOUBLE-SIDED ON RECYCLED PAPER (AUG 2000)

(a) Definitions. As used in this clause--

Postconsumer material means a material or finished product that has served its intended use and has been discarded for disposal or recovery, having completed its life as a consumer item. Postconsumer material is a part of the broader category of “recovered material.” For paper and paper products, postconsumer material means “postconsumer fiber” defined by the U.S. Environmental Protection Agency (EPA) as--

(1) Paper, paperboard, and fibrous materials from retail stores, office buildings, homes, and so forth, after they have passed through their end-usage as a consumer item, including: used corrugated boxes; old newspapers; old magazines; mixed waste paper; tabulating cards; and used cordage; or

(2) All paper, paperboard, and fibrous materials that enter and are collected from municipal solid waste; but not

(3) Fiber derived from printers' over-runs, converters' scrap, and over-issue publications.

Printed or copied double-sided means printing or reproducing a document so that information is on both sides of a sheet of paper.

Recovered material, for paper and paper products, is defined by EPA in its Comprehensive Procurement Guideline as “recovered fiber” and means the following materials:

(1) Postconsumer fiber; and

(2) Manufacturing wastes such as--

(i) Dry paper and paperboard waste generated after completion of the papermaking process (that is, those manufacturing operations up to and including the cutting and trimming of the paper machine reel into smaller rolls or rough sheets) including: envelope cuttings, bindery trimmings, and other paper and paperboard waste resulting from printing, cutting, forming, and other converting operations; bag, box, and carton manufacturing wastes; and butt rolls, mill wrappers, and rejected unused stock; and

(ii) Repulped finished paper and paperboard from obsolete inventories of paper and paperboard manufacturers, merchants, wholesalers, dealers, printers, converters, or others.

(b) In accordance with Section 101 of Executive Order 13101 of September 14, 1998, Greening the Government through Waste Prevention, Recycling, and Federal Acquisition, the Contractor is encouraged to submit paper documents, such as offers, letters, or reports, that are printed or copied double-sided on recycled paper that meet minimum content standards specified in Section 505 of Executive Order 13101, when not using electronic commerce methods to submit information or data to the Government.

(c) If the Contractor cannot purchase high-speed copier paper, offset paper, forms bond, computer printout paper, carbonless paper, file folders, white wove envelopes, writing and office paper, book paper, cotton fiber paper, and

cover stock meeting the 30 percent postconsumer material standard for use in submitting paper documents to the Government, it should use paper containing no less than 20 percent postconsumer material. This lesser standard should be used only when paper meeting the 30 percent postconsumer material standard is not obtainable at a reasonable price or does not meet reasonable performance standards.

(End of clause)

52.209-6 Protecting the Government's Interest When Subcontracting With Contractors Debarred, Suspended, or Proposed for Debarment (JUL 1995)

(a) The Government suspends or debars Contractors to protect the Government's interests. The Contractor shall not enter into any subcontract in excess of the $25,000 with a Contractor that is debarred, suspended, or proposed for debarment unless there is a compelling reason to do so.

(b) The Contractor shall require each proposed first-tier subcontractor, whose subcontract will exceed $25,000, to disclose to the Contractor, in writing, whether as of the time of award of the subcontract, the subcontractor, or its principles, is or is not debarred, suspended, or proposed for debarment by the Federal Government.

(c) A corporate officer or a designee of the Contractor shall notify the Contracting Officer, in writing, before entering into a subcontract with a party that is debarred, suspended, or proposed for debarment (see FAR 9.404 for information on the List of Parties Excluded from Federal Procurement and Nonprocurement Programs). The notice must include the following:

(1) The name of the subcontractor.

(2) The Contractor's knowledge of the reasons for the subcontractor being on the List of Parties Excluded from Federal Procurement and Nonprocurement Programs.

(3) The compelling reason(s) for doing business with the subcontractor notwithstanding its inclusion on the List of Parties Excluded from Federal Procurement and Nonprocurement Programs.

(4) The systems and procedures the Contractor has established to ensure that it is fully protecting the Government's interests when dealing with such subcontractor in view of the specific basis for the party's debarment, suspension, or proposed debarment.

(End of clause)

52.214-26 Audit and Records--Sealed Bidding. (OCT 1997)

(a) As used in this clause, records includes books, documents, accounting procedures and practices, and other data, regardless of type and regardless of whether such items are in written form, in the form of computer data, or in any other form.

(b) Cost or pricing data. If the Contractor has been required to submit cost or pricing data in connection with the pricing of any modification to this contract, the Contracting Officer, or an authorized representative of the Contracting Officer, in order to evaluate the accuracy, completeness, and currency of the cost or pricing data, shall have the right to examine and audit all of the Contractor's records, including computations and projections, related to--

(1) The proposal for the modification;

(2) The discussions conducted on the proposal(s), including those related to negotiating;

(3) Pricing of the modification; or

(4) Performance of the modification.

(c) Comptroller General. In the case of pricing any modification, the Comptroller General of the United States, or an authorized representative, shall have the same rights as specified in paragraph (b) of this clause.

(d) Availability. The Contractor shall make available at its office at all reasonable times the materials described in reproduction, until 3 years after final payment under this contract, or for any other period specified in Subpart 4.7 of the Federal Acquisition Regulation (FAR). FAR Subpart 4.7, Contractor Records Retention, in effect on the data of this contract, is incorporated by reference in its entirety and made a part of this contract.

(1) If this contract is completely or partially terminated, the records relating to the work terminated shall be made available for 3 years after any resulting final termination settlement.

(2) Records pertaining to appeals under the Disputes clause or to litigation or the settlement of claims arising under or relating to the performance of this contract shall be made available until disposition of such appeals, litigation, or claims.

(e) The Contractor shall insert a clause containing all the provisions of this clause, including this paragraph (e), in all subcontracts expected to exceed the threshold in FAR 15.403-4(a)(1) for submission of cost or pricing data.

52.214-27 Price Reduction for Defective Cost or Pricing Data - Modifications - Sealed Bidding. (OCT 1997)

(a) This clause shall become operative only for any modification to this contract involving aggregate increases and/or decreases in costs, plus applicable profits, expected to exceed the threshold for the submission of cost or pricing data at FAR 15.403-4(a)(1), except that this clause does not apply to a modification if an exception under FAR 15.403-1(b) applies.

(1) Based on adequate price competition;

(2) Based on established catalog or market prices of commercial items sold in substantial quantities to the general public; or

(3) Set by law or regulation.

(b) If any price, including profit, negotiated in connection with any modification under this clause, was increased by any significant amount because

(1) the Contractor or a subcontractor furnished cost or pricing data that were not complete, accurate, and current as certified in its Certificate of Current Cost or Pricing Data;

(2) a subcontractor or prospective subcontractor furnished the Contractor cost or pricing data that were not complete, accurate, and current as certified in the Contractor's Certificate of Current Cost or Pricing Data; or

(3) any of these parties furnished data of any description that were not accurate, the price shall be reduced accordingly and the contract shall be modified to reflect the reduction. This right to a price reduction is limited to that resulting from defects in data relating to modifications for which this clause becomes operative under paragraph (a) above.

(c) Any reduction in the contract price under paragraph (b) above due to defective data from a prospective subcontractor that was not subsequently awarded the subcontract shall be limited to the amount, plus applicable overhead and profit markup, by which:

(1) the actual subcontract; or

(2) the actual cost to the Contractor, if there was no subcontract, was less than the prospective subcontract cost estimate submitted by the Contractor; provided, that the actual subcontract price was not itself affected by defective cost or pricing data.

(d) If the Contracting Officer determines under paragraph (b) of this clause that a price or cost reduction should be made:

(1) the Contractor agrees not to raise the following matters as a defense:

(i) The Contractor or subcontractor was a sole source supplier or otherwise was in a superior bargaining position and thus the price of the contract would not have been modified even if accurate, complete, and current cost or pricing data had been submitted;

(ii) The Contracting Officer should have known that the cost or pricing data in issue were defective even though the Contractor or subcontractor took no affirmative action to bring the character of the data to the attention of the Contracting Officer;

(iii) The contract was based on an agreement about the total cost of the contract and there was no agreement about the cost of each item procured under the contract; or

(iv) The Contractor or subcontractor did not submit a Certificate of Current Cost or Pricing Data.

(2) Except as prohibited by subdivision (d)(2)(ii) of this clause:

(i) an offset in an amount determined appropriate by the Contracting Officer based upon the facts shall be allowed against the amount of a contract price reduction if:

(A) The Contractor certifies to the Contracting Officer that, to the best of the Contractor's knowledge and belief, the Contractor is entitled to the offset in the amount requested; and

(B) The Contractor proves that the cost or pricing data were available before the date of agreement on the price of the contract (or price of the modification) and that the data were not submitted before such date.

(ii) An offset shall not be allowed if:

(A) The understated data was known by the Contractor to be understated when the Certificate of Current Cost or Pricing Data was signed; or (B) The Government proves that the facts demonstrate that the contract price would not have increased in the amount to be offset even if the available data had been submitted before the date of agreement on price.

(e) If any reduction in the contract price under this clause reduces the price of items for which payment was made prior to the date of the modification reflecting the price reduction, the Contractor shall be liable to and shall pay the United States at the time such overpayment is repaid:

(1) Simple interest on the amount of such overpayment to be computed from the date(s) of overpayment to the Contractor to the date the Government is repaid by the Contractor at the applicable underpayment rate effective for each quarter prescribed by the Secretary of the Treasury under 26 U.S.C. 6621(a)(2); and

(2) A penalty equal to the amount of the overpayment, if the Contractor or subcontractor knowingly submitted cost or pricing data which were incomplete, inaccurate, or noncurrent.

52.214-28 Subcontractor Cost or Pricing Data - Modifications - Sealed Bidding. (OCT 1997)

(a) The requirements of paragraphs (b) and (c) of this clause shall:

(1) become operative only for any modification to this contract involving aggregate increases and/or decreases in costs, plus applicable profits, expected to exceed the threshold for submission of cost or pricing data at (FAR) 48 CFR 15.403-4(a)(1); and

(2) be limited to such modifications.

(b) Before awarding any subcontract expected to exceed the threshold for submission of cost or pricing data at FAR 15.403-4(a)(1), on the date of agreement on price or the date of award, whichever is later; or before pricing any subcontract modifications involving aggregate increases and/or decreases in costs, plus applicable profits, expected to exceed the threshold for submission of cost or pricing data at FAR 15.403-4(a)(1), the Contractor shall require the subcontractor to submit cost or pricing data (actually or by specific identification in writing), unless an exception under FAR 15.403-1(b) applies.

(1) Based on adequate price competition;

(2) Based on established catalog or market prices of commercial items sold in substantial quantities to the general public; or

(3) Set by law or regulation.

(c) The Contractor shall require the subcontractor to certify in substantially the form prescribed in subsection 15.406-2 of the Federal Acquisition Regulation that, to the best of its knowledge and belief, the data submitted under paragraph (b) above were accurate, complete, and current as of the date of agreement on the negotiated price of the subcontract or subcontract modification.

(d) The Contractor shall insert the substance of this clause, including this paragraph (d), in each subcontract that, when entered into, exceeds the threshold for submission of cost or pricing data at FAR 15.403-4(a)(1).

52.215-19 NOTIFICATION OF OWNERSHIP CHANGES (OCT 1997)

(a) The Contractor shall make the following notifications in writing:

(1) When the Contractor becomes aware that a change in its ownership has occurred, or is certain to occur, that could result in changes in the valuation of its capitalized assets in the accounting records, the Contractor shall notify the Administrative Contracting Officer (ACO) within 30 days.

(2) The Contractor shall also notify the ACO within 30 days whenever changes to asset valuations or any other cost changes have occurred or are certain to occur as a result of a change in ownership.

(b) The Contractor shall--

(1) Maintain current, accurate, and complete inventory records of assets and their costs;

(2) Provide the ACO or designated representative ready access to the records upon request;

(3) Ensure that all individual and grouped assets, their capitalized values, accumulated depreciation or amortization, and remaining useful lives are identified accurately before and after each of the Contractor's ownership changes; and

(4) Retain and continue to maintain depreciation and amortization schedules based on the asset records maintained before each Contractor ownership change.

The Contractor shall include the substance of this clause in all subcontracts under this contract that meet the applicability requirement of FAR 15.408(k).

(End of clause)

52.219-8 UTILIZATION OF SMALL BUSINESS CONCERNS (OCT 2000)

(a) It is the policy of the United States that small business concerns, veteran-owned small business concerns, service-disabled veteran-owned small business concerns, HUBZone small business concerns, small disadvantaged business concerns, and women-owned small business concerns shall have the maximum practicable opportunity to participate in performing contracts let by any Federal agency, including contracts and subcontracts for subsystems, assemblies, components, and related services for major systems. It is further the policy of the United States that its prime contractors establish procedures to ensure the timely payment of amounts due pursuant to the terms of their subcontracts with small business concerns, veteran-owned small business concerns, service-disabled veteran-owned small business concerns, HUBZone small business concerns, small disadvantaged business concerns, and women-owned small business concerns.

(b) The Contractor hereby agrees to carry out this policy in the awarding of subcontracts to the fullest extent consistent with efficient contract performance. The Contractor further agrees to cooperate in any studies or surveys as may be conducted by the United States Small Business Administration or the awarding agency of the United States as may be necessary to determine the extent of the Contractor's compliance with this clause.

Definitions. As used in this contract--

HUBZone small business concern means a small business concern that appears on the List of Qualified HUBZone Small Business Concerns maintained by the Small Business Administration.

Service-disabled veteran-owned small business concern--

(1) Means a small business concern--

(i) Not less than 51 percent of which is owned by one or more service-disabled veterans or, in the case of any publicly owned business, not less than 51 percent of the stock of which is owned by one or more service-disabled veterans; and

(ii) The management and daily business operations of which are controlled by one or more service-disabled veterans or, in the case of a veteran with permanent and severe disability, the spouse or permanent caregiver of such veteran.

(2) Service-disabled veteran means a veteran, as defined in 38 U.S.C. 101(2), with a disability that is service-connected, as defined in 38 U.S.C. 101(16).

Small business concern means a small business as defined pursuant to Section 3 of the Small Business Act and relevant regulations promulgated pursuant thereto.

Small disadvantaged business concern means a small business concern that represents, as part of its offer that--

(1) It has received certification as a small disadvantaged business concern consistent with 13 CFR part 124, subpart B;

(2) No material change in disadvantaged ownership and control has occurred since its certification;

(3) Where the concern is owned by one or more individuals, the net worth of each individual upon whom the certification is based does not exceed $750,000 after taking into account the applicable exclusions set forth at 13 CFR 124.104(c)(2); and

(4) It is identified, on the date of its representation, as a certified small disadvantaged business in the database maintained by the Small Business Administration (PRO-Net).

Veteran-owned small business concern means a small business concern--

(1) Not less than 51 percent of which is owned by one or more veterans (as defined at 38 U.S.C. 101(2)) or, in the case of any publicly owned business, not less than 51 percent of the stock of which is owned by one or more veterans; and

(2) The management and daily business operations of which are controlled by one or more veterans.

Women-owned small business concern means a small business concern--

(1) That is at least 51 percent owned by one or more women, or, in the case of any publicly owned business, at least 51 percent of the stock of which is owned by one or more women; and

(2) Whose management and daily business operations are controlled by one or more women.

(d) Contractors acting in good faith may rely on written representations by their subcontractors regarding their status as a small business concern, a veteran-owned small business concern, a service-disabled veteran-owned small business concern, a HUBZone small business concern, a small disadvantaged business concern, or a women-owned small business concern.

(End of clause)

52.219-14 LIMITATIONS ON SUBCONTRACTING (DEC 1996)

(a) This clause does not apply to the unrestricted portion of a partial set-aside.

(b) By submission of an offer and execution of a contract, the Offeror/Contractor agrees that in performance of the contract in the case of a contract for--

(1) Services (except construction). At least 50 percent of the cost of contract performance incurred for personnel shall be expended for employees of the concern.

(2) Supplies (other than procurement from a nonmanufacturer of such supplies). The concern shall perform work for at least 50 percent of the cost of manufacturing the supplies, not including the cost of materials.

(3) General construction. The concern will perform at least 15 percent of the cost of the contract, not including the cost of materials, with its own employees.

(4) Construction by special trade contractors. The concern will perform at least 25 percent of the cost of the contract, not including the cost of materials, with its own employees.

52.219-25 SMALL DISADVANTAGED BUSINESS PARTICIPATION PROGRAM—DISADVANTAGED STATUS AND REPORTING (OCT 1999)

(a) Disadvantaged status for joint venture partners, team members, and subcontractors. This clause addresses disadvantaged status for joint venture partners, teaming arrangement members, and subcontractors and is applicable if this contract contains small disadvantaged business (SDB) participation targets. The Contractor shall obtain representations of small disadvantaged status from joint venture partners, teaming arrangement members, and subcontractors through use of a provision substantially the same as paragraph (b)(1)(i) of the provision at FAR 52.219-22, Small Disadvantaged Business Status. The Contractor shall confirm that a joint venture partner, team member, or subcontractor representing itself as a small disadvantaged business concern, is identified as a certified small disadvantaged business in the database maintained by the Small Business Administration (PRO-Net) or by contacting the SBA's Office of Small Disadvantaged Business Certification and Eligibility.

(b) Reporting requirement. If this contract contains SDB participation targets, the Contractor shall report on the participation of SDB concerns at contract completion, or as otherwise provided in this contract. Reporting may be on Optional Form 312, Small Disadvantaged Business Participation Report, or in the Contractor's own format providing the same information. This report is required for each contract containing SDB participation targets. If this contract contains an individual Small, Small Disadvantaged and Women-Owned Small Business Subcontracting Plan, reports may be submitted with the final Subcontracting Report for Individual Contracts (Standard Form 294) at the completion of the contract.

(End of clause)

52.222-3 Convict Labor (Aug 1996)

The Contractor agrees not to employ in the performance of this contract any person undergoing a sentence of imprisonment which has been imposed by any court of a State, the District of Columbia, the Commonwealth of Puerto Rico, the Virgin Islands, Guam, American Samoa, the Commonwealth of the Northern Mariana Islands, or the Trust Territory of the Pacific Islands. This limitation, however, shall not prohibit the employment by the Contractor in the performance of this contract of persons on parole or probation to work at paid employment during the term of their sentence or persons who have been pardoned or who have served their terms. Nor shall it prohibit the employment by the Contractor in the performance of this contract of persons confined for violation of the laws of any of the States, the District of Columbia, the Commonwealth of Puerto Rico, the Virgin Islands, Guam, American Samoa, the Commonwealth of the Northern Mariana Islands, or the Trust Territory of the Pacific Islands who are authorized to work at paid employment in the community under the laws of such jurisdiction, if--

(a)(1) The worker is paid or is in an approved work training program on a voluntary basis;

(2) Representatives of local union central bodies or similar labor union organizations have been consulted;

(3) Such paid employment will not result in the displacement of employed workers, or be applied in skills, crafts, or trades in which there is a surplus of available gainful labor in the locality, or impair existing contracts for services; and

(4) The rates of pay and other conditions of employment will not be less than those paid or provided for work of a similar nature in the locality in which the work is being performed; and

(b) The Attorney General of the United States has certified that the work-release laws or regulations of the jurisdiction involved are in conformity with the requirements of Executive Order 11755, as amended by Executive Orders 12608 and 12943.

(End of clause)

52.222-4 Contract Work Hours and Safety Standards Act - Overtime Compensation. (SEP 2000)

(a) Overtime requirements. No Contractor or subcontractor employing laborers or mechanics (see Federal Acquisition Regulation 22.300) shall require or permit them to work over 40 hours in any workweek unless they are paid at least 1 and 1/2 times the basic rate of pay for each hour worked over 40 hours.

(b) Violation; liability for unpaid wages; liquidated damages. The responsible Contractor and subcontractor are liable for unpaid wages if they violate the terms in paragraph (a) of this clause. In addition, the Contractor and subcontractor are liable for liquidated damages payable to the Government. The Contracting Officer will assess liquidated damages at the rate of $10 per affected employee for each calendar day on which the employer required or permitted the employee to work in excess of the standard workweek of 40 hours without paying overtime wages required by the Contract Work Hours and Safety Standards Act.

(c) Withholding for unpaid wages and liquidated damages. The Contracting Officer will withhold from payments due under the contract sufficient funds required to satisfy any Contractor or subcontractor liabilities for unpaid wages and liquidated damages. If amounts withheld under the contract are insufficient to satisfy Contractor or

subcontractor liabilities, the Contracting Officer will withhold payments from other Federal or Federally assisted contracts held by the same Contractor that are subject to the Contract Work Hours and Safety Standards Act.

(d) Payrolls and basic records.

(1) The Contractor and its subcontractors shall maintain payrolls and basic payroll records for all laborers and mechanics working on the contract during the contract and shall make them available to the Government until 3 years after contract completion. The records shall contain the name and address of each employee, social security number, labor classifications, hourly rates of wages paid, daily and weekly number of hours worked, deductions made, and actual wages paid. The records need not duplicate those required for construction work by Department of Labor regulations at 29 CFR 5.5(a)(3) implementing the Davis-Bacon Act.

(2) The Contractor and its subcontractors shall allow authorized representatives of the Contracting Officer or the Department of Labor to inspect, copy, or transcribe records maintained under paragraph (d)(1) of this clause. The Contractor or subcontractor also shall allow authorized representatives of the Contracting Officer or Department of Labor to interview employees in the workplace during working hours.

(e) Subcontracts. The Contractor shall insert the provisions set forth in paragraphs (a) through (d) of this clause in subcontracts exceeding $100,000 and require subcontractors to include these provisions in any lower tier subcontracts. The Contractor shall be responsible for compliance by any subcontractor or lower-tier subcontractor with the provisions set forth in paragraphs (a) through (d) of this clause.

(End of clause)

52.222-6 DAVIS-BACON ACT (FEB 1995)

(a) All laborers and mechanics employed or working upon the site of the work will be paid unconditionally and not less often than once a week, and without subsequent deduction or rebate on any account (except such payroll deductions as are permitted by regulations issued by the Secretary of Labor under the Copeland Act (29 CFR Part 3), the full amount of wages and bona fide fringe benefits (or cash equivalents thereof) due at time of payment computed at rates not less than those contained in the wage determination of the Secretary of Labor which is attached hereto and made a part hereof, regardless of any contractual relationship which may be alleged to exist between the Contractor and such laborers and mechanics. Contributions made or costs reasonably anticipated for bona fide fringe benefits under section 1(b)(2) of the Davis-Bacon Act on behalf of laborers or mechanics are considered wages paid to such laborers or mechanics, subject to the provisions of paragraph (d) of this clause; also, regular contributions made or costs incurred for more than a weekly period (but not less often than quarterly) under plans, funds, or programs which cover the particular weekly period, are deemed to be constructively made or incurred during such period. Such laborers and mechanics shall be paid not less than the appropriate wage rate and fringe benefits in the wage determination for the classification of work actually performed, without regard to skill, except as provided in the clause entitled Apprentices and Trainees. Laborers or mechanics performing work in more than one classification may be compensated at the rate specified for each classification for the time actually worked therein; provided, That the employer's payroll records accurately set forth the time spent in each classification in which work is performed. The wage determination (including any additional classifications and wage rates conformed under paragraph (b) of this clause) and the Davis-Bacon poster (WH-1321) shall be posted at all times by the Contractor and its subcontractors at the site of the work in a prominent and accessible place where it can be easily seen by the workers.

(b)(1) The Contracting Officer shall require that any class of laborers or mechanics which is not listed in the wage determination and which is to be employed under the contract shall be classified in conformance with the wage determination. The Contracting Officer shall approve an additional classification and wage rate and fringe benefits therefor only when all the following criteria have been met:

(i) The work to be performed by the classification requested is not performed by a classification in the wage determination.

(ii) The classification is utilized in the area by the construction industry.

(iii) The proposed wage rate, including any bona fide fringe benefits, bears a reasonable relationship to the wage rates contained in the wage determination.

(2) If the Contractor and the laborers and mechanics to be employed in the classification (if known), or their representatives, and the Contracting Officer agree on the classification and wage rate (including the amount designated for fringe benefits, where appropriate), a report of the action taken shall be sent by the Contracting Officer to the Administrator of the Wage and Hour Division, Employment Standards Administration, U.S. Department of Labor, Washington, DC 20210. The Administrator or an authorized representative will approve, modify, or disapprove every additional classification action within 30 days of receipt and so advise the Contracting Officer or will notify the Contracting Officer within the 30-day period that additional time is necessary.

(3) In the event the Contractor, the laborers or mechanics to be employed in the classification, or their representatives, and the Contracting Officer do not agree on the proposed classification and wage rate (including the amount designated for fringe benefits, where appropriate), the Contracting Officer shall refer the questions, including the views of all interested parties and the recommendation of the Contracting Officer, to the Administrator of the Wage and Hour Division for determination. The Administrator, or an authorized representative, will issue a determination within 30 days of receipt and so advise the Contracting Officer or will notify the Contracting Officer within the 30-day period that additional time is necessary.

(4) The wage rate (including fringe benefits, where appropriate) determined pursuant to subparagraphs (b)(2) and (b)(3) of this clause shall be paid to all workers performing work in the classification under this contract from the first day on which work is performed in the classification.

(c) Whenever the minimum wage rate prescribed in the contract for a class of laborers or mechanics includes a fringe benefit which is not expressed as an hourly rate, the Contractor shall either pay the benefit as stated in the wage determination or shall pay another bona fide fringe benefit or an hourly cash equivalent thereof.

(d) If the Contractor does not make payments to a trustee or other third person, the Contractor may consider as part of the wages of any laborer or mechanic the amount of any costs reasonably anticipated in providing bona fide fringe benefits under a plan or program; provided, That the Secretary of Labor has found, upon the written request of the Contractor, that the applicable standards of the Davis-Bacon Act have been met. The Secretary of Labor may require the Contractor to set aside in a separate account assets for the meeting of obligations under the plan or program.

52.222-7 WITHHOLDING OF FUNDS (FEB 1988)

The Contracting Officer shall, upon his or her own action or upon written request of an authorized representative of the Department of Labor, withhold or cause to be withheld from the Contractor under this contract or any other Federal contract with the same Prime Contractor, or any other Federally assisted contract subject to Davis-Bacon prevailing wage requirements, which is held by the same Prime Contractor, so much of the accrued payments or advances as may be considered necessary to pay laborers and mechanics, including apprentices, trainees, and helpers, employed by the Contractor or any subcontractor the full amount of wages required by the contract. In the event of failure to pay any laborer or mechanic, including any apprentice, trainee, or helper, employed or working on the site of the work, all or part of the wages required by the contract, the Contracting Officer may, after written notice to the Contractor, take such action as may be necessary to cause the suspension of any further payment, advance, or guarantee of funds until such violations have ceased.

52.222-8 PAYROLLS AND BASIC RECORDS (FEB 1988)

(a) Payrolls and basic records relating thereto shall be maintained by the Contractor during the course of the work and preserved for a period of 3 years thereafter for all laborers and mechanics working at the site of the work. Such records shall contain the name, address, and social security number of each such worker, his or her correct classification, hourly rates of wages paid (including rates of contributions or costs anticipated for bona fide fringe benefits or cash equivalents thereof of the types described in section 1(b)(2)(B) of the Davis-Bacon Act), daily and

weekly number of hours worked, deductions made, and actual wages paid. Whenever the Secretary of Labor has found, under paragraph (d) of the clause entitled Davis-Bacon Act, that the wages of any laborer or mechanic include the amount of any costs reasonably anticipated in providing benefits under a plan or program described in section 1(b)(2)(B) of the Davis-Bacon Act, the Contractor shall maintain records which show that the commitment to provide such benefits is enforceable, that the plan or program is financially responsible, and that the plan or program has been communicated in writing to the laborers or mechanics affected, and records which show the costs anticipated or the actual cost incurred in providing such benefits. Contractors employing apprentices or trainees under approved programs shall maintain written evidence of the registration of apprenticeship programs and certification of trainee programs, the registration of the apprentices and trainees, and the ratios and wage rates prescribed in the applicable programs.

(b)(1) The Contractor shall submit weekly for each week in which any contract work is performed a copy of all payrolls to the Contracting Officer. The payrolls submitted shall set out accurately and completely all of the information required to be maintained under paragraph (a) of this clause. This information may be submitted in any form desired. Optional Form WH-347 (Federal Stock Number 029-005-00014-1) is available for this purpose and may be purchased from the Superintendent of Documents, U.S. Government Printing Office, Washington, DC 20402. The Prime Contractor is responsible for the submission of copies of payrolls by all subcontractors.

(2) Each payroll submitted shall be accompanied by a "Statement of Compliance," signed by the Contractor or subcontractor or his or her agent who pays or supervises the payment of the persons employed under the contract and shall certify--

(i) That the payroll for the payroll period contains the information required to be maintained under paragraph (a) of this clause and that such information is correct and complete;

(ii) That each laborer or mechanic (including each helper, apprentice, and trainee) employed on the contract during the payroll period has been paid the full weekly wages earned, without rebate, either directly or indirectly, and that no deductions have been made either directly or indirectly from the full wages earned, other than permissible deductions as set forth in the Regulations, 29 CFR Part 3; and

(iii) That each laborer or mechanic has been paid not less than the applicable wage rates and fringe benefits or cash equivalents for the classification of work performed, as specified in the applicable wage determination incorporated into the contract.

(3) The weekly submission of a properly executed certification set forth on the reverse side of Optional Form WH-347 shall satisfy the requirement for submission of the "Statement of Compliance" required by subparagraph (b)(2) of this clause.

(4) The falsification of any of the certifications in this clause may subject the Contractor or subcontractor to civil or criminal prosecution under Section 1001 of Title 18 and Section 3729 of Title 31 of the United States Code.

(c) The Contractor or subcontractor shall make the records required under paragraph (a) of this clause available for inspection, copying, or transcription by the Contracting Officer or authorized representatives of the Contracting Officer or the Department of Labor. The Contractor or subcontractor shall permit the Contracting Officer or representatives of the Contracting Officer or the Department of Labor to interview employees during working hours on the job. If the Contractor or subcontractor fails to submit required records or to make them available, the Contracting Officer may, after written notice to the Contractor, take such action as may be necessary to cause the suspension of any further payment. Furthermore, failure to submit the required records upon request or to make such records available may be grounds for debarment action pursuant to 29 CFR 5.12.

52.222-9 APPRENTICES AND TRAINEES (FEB 1988)

(a) Apprentices. Apprentices will be permitted to work at less than the predetermined rate for the work they performed when they are employed pursuant to and individually registered in a bona fide apprenticeship program registered with the U.S. Department of Labor, Employment and Training Administration, Bureau of Apprenticeship

and Training, or with a State Apprenticeship Agency recognized by the Bureau, or if a person is employed in his or her first 90 days of probationary employment as an apprentice in such an apprenticeship program, who is not individually registered in the program, but who has been certified by the Bureau of Apprenticeship and Training or a State Apprenticeship Agency (where appropriate) to be eligible for probationary employment as an apprentice. The allowable ratio of apprentices to journeymen on the job site in any craft classification shall not be greater than the ratio permitted to the Contractor as to the entire work force under the registered program. Any worker listed on a payroll at an apprentice wage rate, who is not registered or otherwise employed as stated in this paragraph, shall be paid not less than the applicable wage determination for the classification of work actually performed. In addition, any apprentice performing work on the job site in excess of the ratio permitted under the registered program shall be paid not less than the applicable wage rate on the wage determination for the work actually performed. Where a contractor is performing construction on a project in a locality other than that in which its program is registered, the ratios and wage rates (expressed in percentages of the journeyman's hourly rate) specified in the Contractor's or subcontractor's registered program shall be observed. Every apprentice must be paid at not less than the rate specified in the registered program for the apprentice's level of progress, expressed as a percentage of the journeyman hourly rate specified in the applicable wage determination. Apprentices shall be paid fringe benefits in accordance with the provisions of the apprenticeship program. If the apprenticeship program does not specify fringe benefits, apprentices must be paid the full amount of fringe benefits listed on the wage determination for the applicable classification. If the Administrator determines that a different practice prevails for the applicable apprentice classification, fringes shall be paid in accordance with that determination. In the event the Bureau of Apprenticeship and Training, or a State Apprenticeship Agency recognized by the Bureau, withdraws approval of an apprenticeship program, the Contractor will no longer be permitted to utilize apprentices at less than the applicable predetermined rate for the work performed until an acceptable program is approved.

(b) Trainees. Except as provided in 29 CFR 5.16, trainees will not be permitted to work at less than the predetermined rate for the work performed unless they are employed pursuant to and individually registered in a program which has received prior approval, evidenced by formal certification by the U.S. Department of Labor, Employment and Training Administration. The ratio of trainees to journeymen on the job site shall not be greater than permitted under the plan approved by the Employment and Training Administration. Every trainee must be paid at not less than the rate specified in the approved program for the trainee's level of progress, expressed as a percentage of the journeyman hourly rate specified in the applicable wage determination. Trainees shall be paid fringe benefits in accordance with the provisions of the trainee program. If the trainee program does not mention fringe benefits, trainees shall be paid the full amount of fringe benefits listed in the wage determination unless the Administrator of the Wage and Hour Division determines that there is an apprenticeship program associated with the corresponding journeyman wage rate in the wage determination which provides for less than full fringe benefits for apprentices. Any employee listed on the payroll at a trainee rate who is not registered and participating in a training plan approved by the Employment and Training Administration shall be paid not less than the applicable wage rate in the wage determination for the classification of work actually performed. In addition, any trainee performing work on the job site in excess of the ratio permitted under the registered program shall be paid not less than the applicable wage rate in the wage determination for the work actually performed. In the event the Employment and Training Administration withdraws approval of a training program, the Contractor will no longer be permitted to utilize trainees at less than the applicable predetermined rate for the work performed until an acceptable program is approved.

(c) Equal employment opportunity. The utilization of apprentices, trainees, and journeymen under this clause shall be in conformity with the equal employment opportunity requirements of Executive Order 11246, as amended, and 29 CFR Part 30.

52.222-10 COMPLIANCE WITH COPELAND ACT REQUIREMENTS (FEB 1988)

The Contractor shall comply with the requirements of 29 CFR Part 3, which are hereby incorporated by reference in this contract.

52.222-11 SUBCONTRACTS (LABOR STANDARDS (FEB 1988)

(a) The Contractor or subcontractor shall insert in any subcontracts the clauses entitled Davis-Bacon Act, Contract Work Hours and Safety Standards Act-Overtime Compensation, Apprentices and Trainees, Payrolls and Basic Records, Compliance with Copeland Act Requirements, Withholding of Funds, Subcontracts (Labor Standards), Contract Termination-Debarment, Disputes Concerning Labor Standards, Compliance with Davis-Bacon and Related Act Regulations, and Certification of Eligibility, and such other clauses as the Contracting Officer may, by appropriate instructions, require, and also a clause requiring subcontractors to include these clauses in any lower tier subcontracts. The Prime Contractor shall be responsible for compliance by any subcontractor or lower tier subcontractor with all the contract clauses cited in this paragraph.

(b)(1) Within 14 days after award of the contract, the Contractor shall deliver to the Contracting Officer a completed Statement and Acknowledgment Form (SF 1413) for each subcontract, including the subcontractor's signed and dated acknowledgment that the clauses set forth in paragraph (a) of this clause have been included in the subcontract.

(2) Within 14 days after the award of any subsequently awarded subcontract the Contractor shall deliver to the Contracting Officer an updated completed SF 1413 for such additional subcontract.

52.222-12 CONTRACT TERMINATION--DEBARMENT (FEB 1988)

A breach of the contract clauses entitled Davis-Bacon Act, Contract Work Hours and Safety Standards Act--Overtime Compensation, Apprentices and Trainees, Payrolls and Basic Records, Compliance with Copeland Act Requirements, Subcontracts (Labor Standards), Compliance with Davis-Bacon and Related Act Regulations, or Certification of Eligibility may be grounds for termination of the contract, and for debarment as a Contractor and subcontractor as provided in 29 CFR 5.12.

52.222-13 COMPLIANCE WITH DAVIS-BACON AND RELATED ACT REGULATIONS (FEB 1988)

All rulings and interpretations of the Davis-Bacon and Related Acts contained in 29 CFR Parts 1, 3, and 5 are hereby incorporated by reference in this contract.

52.222-14 DISPUTES CONCERNING LABOR STANDARDS (FEB 1988)

The United States Department of Labor has set forth in 29 CFR Parts 5, 6, and 7 procedures for resolving disputes concerning labor standards requirements. Such disputes shall be resolved in accordance with those procedures and not the Disputes clause of this contract. Disputes within the meaning of this clause include disputes between the Contractor (or any of its subcontractors) and the contracting agency, the U.S. Department of Labor, or the employees or their representatives.

52.222-15 CERTIFICATION OF ELIGIBILITY (FEB 1988)

(a) By entering into this contract, the Contractor certifies that neither it (nor he or she) nor any person or firm who has an interest in the Contractor's firm is a person or firm ineligible to be awarded Government contracts by virtue of section 3(a) of the Davis-Bacon Act or 29 CFR 5.12(a)(1).

(b) No part of this contract shall be subcontracted to any person or firm ineligible for award of a Government contract by virtue of section 3(a) of the Davis-Bacon Act or 29 CFR 5.12(a)(1).

(c) The penalty for making false statements is prescribed in the U.S. Criminal Code, 18 U.S.C. 1001.

52.222-21 PROHIBITION OF SEGREGATED FACILITIES (FEB 1999)

(a) Segregated facilities, as used in this clause, means any waiting rooms, work areas, rest rooms and wash rooms, restaurants and other eating areas, time clocks, locker rooms and other storage or dressing areas, parking lots, drinking fountains, recreation or entertainment areas, transportation, and housing facilities provided for employees, that are segregated by explicit directive or are in fact segregated on the basis of race, color, religion, sex, or national origin because of written or oral policies or employee custom. The term does not include separate or single-user rest rooms or necessary dressing or sleeping areas provided to assure privacy between the sexes.

(b) The Contractor agrees that it does not and will not maintain or provide for its employees any segregated facilities at any of its establishments, and that it does not and will not permit its employees to perform their services at any location under its control where segregated facilities are maintained. The Contractor agrees that a breach of this clause is a violation of the Equal Opportunity clause in this contract.

(c) The Contractor shall include this clause in every subcontract and purchase order that is subject to the Equal Opportunity clause of this contract.

(End of clause)

52.222-26 EQUAL OPPORTUNITY (FEB 1999)

(a) If, during any 12-month period (including the 12 months preceding the award of this contract), the Contractor has been or is awarded nonexempt Federal contracts and/or subcontracts that have an aggregate value in excess of $10,000, the Contractor shall comply with subparagraphs (b)(1) through (11) of this clause. Upon request, the Contractor shall provide information necessary to determine the applicability of this clause.

(b) During performing this contract, the Contractor agrees as follows:

(1) The Contractor shall not discriminate against any employee or applicant for employment because of race, color, religion, sex, or national origin. However, it shall not be a violation of this clause for the Contractor to extend a publicly announced preference in employment to Indians living on or near an Indian reservation, in connection with employment opportunities on or near an Indian reservation, as permitted by 41 CFR 60-1.5.

(2) The Contractor shall take affirmative action to ensure that applicants are employed, and that employees are treated during employment, without regard to their race, color, religion, sex, or national origin. This shall include, but not be limited to, (i) employment, (ii) upgrading, (iii) demotion, (iv) transfer, (v) recruitment or recruitment advertising, (vi) layoff or termination, (vii) rates of pay or other forms of compensation, and (viii) selection for training, including apprenticeship.

(3) The Contractor shall post in conspicuous places available to employees and applicants for employment the notices to be provided by the Contracting Officer that explain this clause.

(4) The Contractor shall, in all solicitations or advertisements for employees placed by or on behalf of the Contractor, state that all qualified applicants will receive consideration for employment without regard to race, color, religion, sex, or national origin.

(5) The Contractor shall send, to each labor union or representative of workers with which it has a collective bargaining agreement or other contract or understanding, the notice to be provided by the Contracting Officer advising the labor union or workers' representative of the Contractor's commitments under this clause, and post copies of the notice in conspicuous places available to employees and applicants for employment.

(6) The Contractor shall comply with Executive Order 11246, as amended, and the rules, regulations, and orders of the Secretary of Labor.

(7) The Contractor shall furnish to the contracting agency all information required by Executive Order 11246, as amended, and by the rules, regulations, and orders of the Secretary of Labor. The Contractor shall also file Standard Form 100 (EEO-1), or any successor form, as prescribed in 41 CFR part 60-1. Unless the Contractor has filed within

the 12 months preceding the date of contract award, the Contractor shall, within 30 days after contract award, apply to either the regional Office of Federal Contract Compliance Programs (OFCCP) or the local office of the Equal Employment Opportunity Commission for the necessary forms.

(8) The Contractor shall permit access to its premises, during normal business hours, by the contracting agency or the OFCCP for the purpose of conducting on-site compliance evaluations and complaint investigations. The Contractor shall permit the Government to inspect and copy any books, accounts, records (including computerized records), and other material that may be relevant to the matter under investigation and pertinent to compliance with Executive Order 11246, as amended, and rules and regulations that implement the Executive Order.

(9) If the OFCCP determines that the Contractor is not in compliance with this clause or any rule, regulation, or order of the Secretary of Labor, this contract may be canceled, terminated, or suspended in whole or in part and the Contractor may be declared ineligible for further Government contracts, under the procedures authorized in Executive Order 11246, as amended. In addition, sanctions may be imposed and remedies invoked against the Contractor as provided in Executive Order 11246, as amended; in the rules, regulations, and orders of the Secretary of Labor; or as otherwise provided by law.

(10) The Contractor shall include the terms and conditions of subparagraphs (b)(1) through (11) of this clause in every subcontract or purchase order that is not exempted by the rules, regulations, or orders of the Secretary of Labor issued under Executive Order 11246, as amended, so that these terms and conditions will be binding upon each subcontractor or vendor.

(11) The Contractor shall take such action with respect to any subcontract or purchase order as the contracting officer may direct as a means of enforcing these terms and conditions, including sanctions for noncompliance; provided, that if the Contractor becomes involved in, or is threatened with, litigation with a subcontractor or vendor as a result of any direction, the Contractor may request the United States to enter into the litigation to protect the interests of the United States.

(c) Notwithstanding any other clause in this contract, disputes relative to this clause will be governed by the procedures in 41 CFR 60-1.1.

52.222-27 AFFIRMATIVE ACTION COMPLIANCE REQUIREMENTS FOR CONSTRUCTION (FEB 1999)

(a) Definitions. "Covered area," as used in this clause, means the geographical area described in the solicitation for this contract.

"Deputy Assistant Secretary," as used in this clause, means Deputy Assistant Secretary for Federal Contract Compliance, U.S. Department of Labor, or a designee.

"Employer's identification number," as used in this clause, means the Federal Social Security number used on the employer's quarterly federal tax return, U.S. Treasury Department Form 941.

"Minority," as used in this clause, means--

(1) American Indian or Alaskan Native (all persons having origins in any of the original peoples of North America and maintaining identifiable tribal affiliations through membership and participation or community identification).

(2) Asian and Pacific Islander (all persons having origins in any of the original peoples of the Far East, Southeast Asia, the Indian Subcontinent, or the Pacific Islands);

(3) Black (all persons having origins in any of the black African racial groups not of Hispanic origin); and

(4) Hispanic (all persons of Mexican, Puerto Rican, Cuban, Central or South American, or other Spanish culture or origin, regardless of race).

(b) If the Contractor, or a subcontractor at any tier, subcontracts a portion of the work involving any construction trade, each such subcontract in excess of $10,000 shall include this clause and the Notice containing the goals for minority and female participation stated in the solicitation for this contract.

(c) If the Contractor is participating in a Hometown Plan (41 CFR 60-4) approved by the U.S. Department of Labor in a covered area, either individually or through an association, its affirmative action obligations on all work in the plan area (including goals) shall comply with the plan for those trades that have unions participating in the plan. Contractors must be able to demonstrate participation in, and compliance with, the provisions of the plan. Each Contractor or subcontractor participating in an approved plan is also required to comply with its obligations under the Equal Opportunity clause, and to make a good faith effort to achieve each goal under the plan in each trade in which it has employees. The overall good-faith performance by other Contractors or subcontractors toward a goal in an approved plan does not excuse any Contractor's or subcontractor's failure to make good-faith efforts to achieve the plan's goals.

(d) The Contractor shall implement the affirmative action procedures in subparagraphs (g)(1) through (16) of this clause. The goals stated in the solicitation for this contract are expressed as percentages of the total hours of employment and training of minority and female utilization that the Contractor should reasonably be able to achieve in each construction trade in which it has employees in the covered area. If the Contractor performs construction work in a geographical area located outside of the covered area, it shall apply the goals established for the geographical area where that work is actually performed. The Contractor is expected to make substantially uniform progress toward its goals in each craft.

(e) Neither the terms and conditions of any collective bargaining agreement, nor the failure by a union with which the Contractor has a collective bargaining agreement, to refer minorities or women shall excuse the Contractor's obligations under this clause, Executive Order 11246, as amended, or the regulations thereunder.

(f) In order for the nonworking training hours of apprentices and trainees to be counted in meeting the goals, apprentices and trainees must be employed by the Contractor during the training period, and the Contractor must have made a commitment to employ the apprentices and trainees at the completion of their training, subject to the availability of employment opportunities. Trainees must be trained pursuant to training programs approved by the U.S. Department of Labor.

(g) The Contractor shall take affirmative action to ensure equal employment opportunity. The evaluation of the Contractor's compliance with this clause shall be based upon its effort to achieve maximum results from its actions. The Contractor shall document these efforts fully and implement affirmative action steps at least as extensive as the following:

(1) Ensure a working environment free of harassment, intimidation, and coercion at all sites and in all facilities where the Contractor's employees are assigned to work. The Contractor, if possible, will assign two or more women to each construction project. The Contractor shall ensure that foremen, superintendents, and other onsite supervisory personnel are aware of and carry out the Contractor's obligation to maintain such a working environment, with specific attention to minority or female individuals working at these sites or facilities.

(2) Establish and maintain a current list of sources for minority and female recruitment. Provide written notification to minority and female recruitment sources and community organizations when the Contractor or its unions have employment opportunities available, and maintain a record of the organizations' responses.

(3) Establish and maintain a current file of the names, addresses, and telephone numbers of each minority and female off-the-street applicant, referrals of minorities or females from unions, recruitment sources, or community organizations, and the action taken with respect to each individual. If an individual was sent to the union hiring hall for referral and not referred back to the Contractor by the union or, if referred back, not employed by the Contractor, this shall be documented in the file, along with whatever additional actions the Contractor may have taken.

(4) Immediately notify the Deputy Assistant Secretary when the union or unions with which the Contractor has a collective bargaining agreement has not referred back to the Contractor a minority or woman sent by the Contractor,

or when the Contractor has other information that the union referral process has impeded the Contractor's efforts to meet its obligations.

(5) Develop on-the-job training opportunities and/or participate in training programs for the area that expressly include minorities and women, including upgrading programs and apprenticeship and trainee programs relevant to the Contractor's employment needs, especially those programs funded or approved by the Department of Labor. The Contractor shall provide notice of these programs to the sources compiled under subparagraph (g)(2) of this clause.

(6) Disseminate the Contractor's equal employment policy by--

(i) Providing notice of the policy to unions and to training, recruitment, and outreach programs, and requesting their cooperation in assisting the Contractor in meeting its contract obligations;

(ii) Including the policy in any policy manual and in collective bargaining agreements;

(iii) Publicizing the policy in the company newspaper, annual report, etc.;

(iv) Reviewing the policy with all management personnel and with all minority and female employees at least once a year; and

(v) Posting the policy on bulletin boards accessible to employees at each location where construction work is performed.

(7) Review, at least annually, the Contractor's equal employment policy and affirmative action obligations with all employees having responsibility for hiring, assignment, layoff, termination, or other employment decisions. Conduct review of this policy with all on-site supervisory personnel before initiating construction work at a job site. A written record shall be made and maintained identifying the time and place of these meetings, persons attending, subject matter discussed, and disposition of the subject matter.

(8) Disseminate the Contractor's equal employment policy externally by including it in any advertising in the news media, specifically including minority and female news media. Provide written notification to, and discuss this policy with, other Contractors and subcontractors with which the Contractor does or anticipates doing business.

(9) Direct recruitment efforts, both oral and written, to minority, female, and community organizations, to schools with minority and female students, and to minority and female recruitment and training organizations serving the Contractor's recruitment area and employment needs. Not later than 1 month before the date for acceptance of applications for apprenticeship or training by any recruitment source, send written notification to organizations such as the above, describing the openings, screening procedures, and tests to be used in the selection process.

(10) Encourage present minority and female employees to recruit minority persons and women. Where reasonable, provide after-school, summer, and vacation employment to minority and female youth both on the site and in other areas of the Contractor's workforce.

(11) Validate all tests and other selection requirements where required under 41 CFR 60-3.

(12) Conduct, at least annually, an inventory and evaluation at least of all minority and female personnel for promotional opportunities. Encourage these employees to seek or to prepare for, through appropriate training, etc., opportunities for promotion.

(13) Ensure that seniority practices, job classifications, work assignments, and other personnel practices do not have a discriminatory effect by continually monitoring all personnel and employment-related activities to ensure that the Contractor's obligations under this contract are being carried out.

(14) Ensure that all facilities and company activities are nonsegregated except that separate or single-user rest rooms and necessary dressing or sleeping areas shall be provided to assure privacy between the sexes.

(15) Maintain a record of solicitations for subcontracts for minority and female construction contractors and suppliers, including circulation of solicitations to minority and female contractor associations and other business associations.

(16) Conduct a review, at least annually, of all supervisors' adherence to and performance under the Contractor's equal employment policy and affirmative action obligations.

(h) The Contractor is encouraged to participate in voluntary associations that may assist in fulfilling one or more of the affirmative action obligations contained in subparagraphs (g)(1) through (16) of this clause. The efforts of a contractor association, joint contractor-union, contractor-community, or similar group of which the contractor is a member and participant may be asserted as fulfilling one or more of its obligations under subparagraphs (g)(1) through (16) of this clause, provided the Contractor--

(1) Actively participates in the group;

(2) Makes every effort to ensure that the group has a positive impact on the employment of minorities and women in the industry;

(3) Ensures that concrete benefits of the program are reflected in the Contractor's minority and female workforce participation;

(4) Makes a good-faith effort to meet its individual goals and timetables; and

(5) Can provide access to documentation that demonstrates the effectiveness of actions taken on behalf of the Contractor. The obligation to comply is the Contractor's, and failure of such a group to fulfill an obligation shall not be a defense for the Contractor's noncompliance.

(i) A single goal for minorities and a separate single goal for women shall be established. The Contractor is required to provide equal employment opportunity and to take affirmative action for all minority groups, both male and female, and all women, both minority and nonminority. Consequently, the Contractor may be in violation of Executive Order 11246, as amended, if a particular group is employed in a substantially disparate manner.

(j) The Contractor shall not use goals or affirmative action standards to discriminate against any person because of race, color, religion, sex, or national origin.

(k) The Contractor shall not enter into any subcontract with any person or firm debarred from Government contracts under Executive Order 11246, as amended.

(l) The Contractor shall carry out such sanctions and penalties for violation of this clause and of the Equal Opportunity clause, including suspension, termination, and cancellation of existing subcontracts, as may be imposed or ordered under Executive Order 11246, as amended, and its implementing regulations, by the OFCCP. Any failure to carry out these sanctions and penalties as ordered shall be a violation of this clause and Executive Order 11246, as amended.

(m) The Contractor in fulfilling its obligations under this clause shall implement affirmative action procedures at least as extensive as those prescribed in paragraph (g) of this clause, so as to achieve maximum results from its efforts to ensure equal employment opportunity. If the Contractor fails to comply with the requirements of Executive Order 11246, as amended, the implementing regulations, or this clause, the Deputy Assistant Secretary shall take action as prescribed in 41 CFR 60-4.8.

(n) The Contractor shall designate a responsible official to--

(1) Monitor all employment-related activity to ensure that the Contractor's equal employment policy is being carried out;

(2) Submit reports as may be required by the Government; and

(3) Keep records that shall at least include for each employee the name, address, telephone number, construction trade, union affiliation (if any), employee identification number, social security number, race, sex, status (e.g., mechanic, apprentice, trainee, helper, or laborer), dates of changes in status, hours worked per week in the indicated trade, rate of pay, and locations at which the work was performed. Records shall be maintained in an easily understandable and retrievable form; however, to the degree that existing records satisfy this requirement, separate records are not required to be maintained.

Nothing contained herein shall be construed as a limitation upon the application of other laws that establish different standards of compliance or upon the requirements for the hiring of local or other area residents (e.g., those under the Public Works Employment Act of 1977 and the Community Development Block Grant Program).

52.222-35 AFFIRMATIVE ACTION FOR DISABLED VETERANS AND VETERANS OF THE VIETNAM ERA (APR 1998)

(a)) Definitions. As used in this clause--

All employment openings includes all positions except executive and top management, those positions that will be filled from within the contractor's organization, and positions lasting 3 days or less. This term includes full-time employment, temporary employment of more than 3 days' duration, and part-time employment.

Appropriate office of the State employment service system means the local office of the Federal-State national system of public employment offices with assigned responsibility to serve the area where the employment opening is to be filled, including the District of Columbia, Guam, the Commonwealth of Puerto Rico, and the Virgin Islands.

Positions that will be filled from within the Contractor's organization means employment openings for which no consideration will be given to persons outside the Contractor's organization (including any affiliates, subsidiaries, and parent companies) and includes any openings that the Contractor proposes to fill from regularly established “recall” lists. The exception does not apply to a particular opening once an employer decides to consider applicants outside of its organization.

Veteran of the Vietnam era means a person who--

(1) Served on active duty for a period of more than 180 days, any part of which occurred between August 5, 1964, and May 7, 1975, and was discharged or released therefrom with other than a dishonorable discharge; or

(2) Was discharged or released from active duty for a service-connected disability if any part of such active duty was performed between August 5, 1964, and May 7, 1975.

(b) General. (1) Regarding any position for which the employee or applicant for employment is qualified, the Contractor shall not discriminate against the individual because the individual is a disabled veteran or a veteran of the Vietnam era. The Contractor agrees to take affirmative action to employ, advance in employment, and otherwise treat qualified disabled veterans and veterans of the Vietnam era without discrimination based upon their disability or veterans' status in all employment practices such as--

(i) Employment;

(ii) Upgrading;

(iii) Demotion or transfer;

(iv) Recruitment;

(v) Advertising;

(vi) Layoff or termination;

(vii) Rates of pay or other forms of compensation; and

(viii) Selection for training, including apprenticeship.

(2) The Contractor agrees to comply with the rules, regulations, and relevant orders of the Secretary of Labor (Secretary) issued under the Vietnam Era Veterans' Readjustment Assistance Act of 1972 (the Act), as amended.

(c) Listing openings. (1) The Contractor agrees to list all employment openings existing at contract award or occurring during contract performance, at an appropriate office of the State employment service system in the locality where the opening occurs. These openings include those occurring at any Contractor facility, including one not connected with performing this contract. An independent corporate affiliate is exempt from this requirement.

(2) State and local government agencies holding Federal contracts of $10,000 or more shall also list all their employment openings with the appropriate office of the State employment service.

(3) The listing of employment openings with the State employment service system is required at least concurrently with using any other recruitment source or effort and involves the obligations of placing a bona fide job order, including accepting referrals of veterans and nonveterans. This listing does not require hiring any particular job applicant or hiring from any particular group of job applicants and is not intended to relieve the Contractor from any requirements of Executive orders or regulations concerning nondiscrimination in employment.

(4) Whenever the Contractor becomes contractually bound to the listing terms of this clause, it shall advise the State employment service system, in each State where it has establishments, of the name and location of each hiring location in the State. As long as the Contractor is contractually bound to these terms and has so advised the State system, it need not advise the State system of subsequent contracts. The Contractor may advise the State system when it is no longer bound by this contract clause.

(d) Applicability. This clause does not apply to the listing of employment openings that occur and are filled outside the 50 States, the District of Columbia, the Commonwealth of Puerto Rico, Guam, and the Virgin Islands.

(e) Postings. (1) The Contractor agrees to post employment notices stating (i) the Contractor's obligation under the law to take affirmative action to employ and advance in employment qualified disabled veterans and veterans of the Vietnam era, and (ii) the rights of applicants and employees.

(2) These notices shall be posted in conspicuous places that are available to employees and applicants for employment. They shall be in a form prescribed by the Deputy Assistant Secretary for Federal Contract Compliance Programs, Department of Labor (Deputy Assistant Secretary), and provided by or through the Contracting Officer.

(3) The Contractor shall notify each labor union or representative of workers with which it has a collective bargaining agreement or other contract understanding, that the Contractor is bound by the terms of the Act, and is committed to take affirmative action to employ, and advance in employment, qualified disabled veterans and veterans of the Vietnam Era.

(f) Noncompliance. If the Contractor does not comply with the requirements of this clause, appropriate actions may be taken under the rules, regulations, and relevant orders of the Secretary issued pursuant to the Act.

(g) Subcontracts. The Contractor shall include the terms of this clause in every subcontract or purchase order of $10,000 or more unless exempted by rules, regulations, or orders of the Secretary. The Contractor shall act as specified by the Deputy Assistant Secretary to enforce the terms, including action for noncompliance.

(End of clause)

52.222-36 AFFIRMATIVE ACTION FOR WORKERS WITH DISABILITIES (JUN 1998)

(a) General. (1) Regarding any position for which the employee or applicant for employment is qualified, the Contractor shall not discriminate against any employee or applicant because of physical or mental disability. The Contractor agrees to take affirmative action to employ, advance in employment, and otherwise treat qualified individuals with disabilities without discrimination based upon their physical or mental disability in all employment practices such as--

(i) Recruitment, advertising, and job application procedures;

(ii) Hiring, upgrading, promotion, award of tenure, demotion, transfer, layoff, termination, right of return from layoff, and rehiring;

(iii) Rates of pay or any other form of compensation and changes in compensation;

(iv) Job assignments, job classifications, organizational structures, position descriptions, lines of progression, and seniority lists;

(v) Leaves of absence, sick leave, or any other leave;

(vi) Fringe benefits available by virtue of employment, whether or not administered by the Contractor;

(vii) Selection and financial support for training, including apprenticeships, professional meetings, conferences, and other related activities, and selection for leaves of absence to pursue training;

(viii) Activities sponsored by the Contractor, including social or recreational programs; and

(ix) Any other term, condition, or privilege of employment.

(2) The Contractor agrees to comply with the rules, regulations, and relevant orders of the Secretary of Labor (Secretary) issued under the Rehabilitation Act of 1973 (29 U.S.C. 793) (the Act), as amended.

(b) Postings. (1) The Contractor agrees to post employment notices stating--

(i) The Contractor's obligation under the law to take affirmative action to employ and advance in employment qualified individuals with disabilities; and

(ii) The rights of applicants and employees.

(2) These notices shall be posted in conspicuous places that are available to employees and applicants for employment. The Contractor shall ensure that applicants and employees with disabilities are informed of the contents of the notice (e.g., the Contractor may have the notice read to a visually disabled individual, or may lower the posted notice so that it might be read by a person in a wheelchair). The notices shall be in a form prescribed by the Deputy Assistant Secretary for Federal Contract Compliance of the U.S. Department of Labor (Deputy Assistant Secretary) and shall be provided by or through the Contracting Officer.

(3) The Contractor shall notify each labor union or representative of workers with which it has a collective bargaining agreement or other contract understanding, that the Contractor is bound by the terms of Section 503 of the Act and is committed to take affirmative action to employ, and advance in employment, qualified individuals with physical or mental disabilities.

(c) Noncompliance. If the Contractor does not comply with the requirements of this clause, appropriate actions may be taken under the rules, regulations, and relevant orders of the Secretary issued pursuant to the Act.

(d) Subcontracts. The Contractor shall include the terms of this clause in every subcontract or purchase order in excess of $10,000 unless exempted by rules, regulations, or orders of the Secretary. The Contractor shall act as specified by the Deputy Assistant Secretary to enforce the terms, including action for noncompliance.

(End of clause)

52.222-37 EMPLOYMENT REPORTS ON DISABLED VETERANS AND VETERANS OF THE VIETNAM ERA (JAN 1999)

(a) Unless the Contractor is a State or local government agency, the Contractor shall report at least annually, as required by the Secretary of Labor, on--

(1) The number of disabled veterans and the number of veterans of the Vietnam era in the workforce of the contractor by job category and hiring location; and

(2) The total number of new employees hired during the period covered by the report, and of that total, the number of disabled veterans, and the number of veterans of the Vietnam era.

(b) The above items shall be reported by completing the form entitled "Federal Contractor Veterans' Employment Report VETS-100."

(c) Reports shall be submitted no later than September 30 of each year beginning September 30, 1988.

(d) The employment activity report required by paragraph (a)(2) of this clause shall reflect total hires during the most recent 12-month period as of the ending date selected for the employment profile report required by paragraph (a)(1) of this clause. Contractors may select an ending date: (1) As of the end of any pay period during the period January through March 1st of the year the report is due, or (2) as of December 31, if the contractor has previous written approval from the Equal Employment Opportunity Commission to do so for purposes of submitting the Employer Information Report EEO-1 (Standard Form 100).

(e) The count of veterans reported according to paragraph (a) of this clause shall be based on voluntary disclosure. Each Contractor subject to the reporting requirements at 38 U.S.C. 4212 shall invite all disabled veterans and veterans of the Vietnam era who wish to benefit under the affirmative action program at 38 U.S.C. 4212 to identify themselves to the Contractor. The invitation shall state that the information is voluntarily provided; that the information will be kept confidential; that disclosure or refusal to provide the information will not subject the applicant or employee to any adverse treatment; and that the information will be used only in accordance with the regulations promulgated under 38 U.S.C. 4212.

(f) Subcontracts. The Contractor shall include the terms of this clause in every subcontract or purchase order of $10,000 or more unless exempted by rules, regulations, or orders of the Secretary.

(End of clause)

52.223-5 POLLUTION PREVENTION AND RIGHT-TO-KNOW INFORMATION (APR 1998)

(a) Executive Order 12856 of August 3, 1993, requires Federal facilities to comply with the provisions of the Emergency Planning and Community Right-to-Know Act of 1986 (EPCRA)(42 U.S.C. 11001-11050) and the Pollution Prevention Act of 1990 (PPA)(42 U.S.C. 13101-13109).

(b) The Contractor shall provide all information needed by the Federal facility to comply with the emergency planning reporting requirements of Section 302 of EPCRA; the emergency notice requirements of Section 304 of EPCRA; the list of Material Safety Data Sheets required by Section 311 of EPCRA; the emergency and hazardous chemical inventory forms of Section 312 of EPCRA; the toxic chemical release inventory of Section 313 of EPCRA, which includes the reduction and recycling information required by Section 6607 of PPA; and the toxic chemical reduction goals requirements of Section 3-302 of Executive Order 12856.

52.223-6 DRUG-FREE WORKPLACE (MAY 2001)

(a) Definitions. As used in this clause --

"Controlled substance" means a controlled substance in schedules I through V of section 202 of the Controlled Substances Act (21 U.S.C. 812) and as further defined in regulation at 21 CFR 1308.11 - 1308.15.

"Conviction" means a finding of guilt (including a plea of nolo contendere) or imposition of sentence, or both, by any judicial body charged with the responsibility to deter- mine violations of the Federal or State criminal drug statutes.

"Criminal drug statute" means a Federal or non-Federal criminal statute involving the manufacture, distribution, dispensing, possession, or use of any controlled substance.

"Drug-free workplace" means the site(s) for the performance of work done by the Contractor in connection with a specific contract where employees of the Contractor are prohibited from engaging in the unlawful manufacture, distribution, dispensing, possession, or use of a controlled substance.

"Employee" means an employee of a Contractor directly engaged in the performance of work under a Government contract. "Directly engaged" is defined to include all direct cost employees and any other Contractor employee who has other than a minimal impact or involvement in contract performance.

"Individual" means an offeror/contractor that has no more than one employee including the offeror/contractor.

(b) The Contractor, if other than an individual, shall-- within 30 days after award (unless a longer period is agreed to in writing for contracts of 30 days or more performance duration), or as soon as possible for contracts of less than 30 days performance duration--

(1) Publish a statement notifying its employees that the unlawful manufacture, distribution, dispensing, possession, or use of a controlled substance is prohibited in the Contractor's workplace and specifying the actions that will be taken against employees for violations of such prohibition;

(2) Establish an ongoing drug-free awareness program to inform such employees about--

(i) The dangers of drug abuse in the workplace;

(ii) The Contractor's policy of maintaining a drug-free workplace;

(iii) Any available drug counseling, rehabilitation, and employee assistance programs; and

(iv) The penalties that may be imposed upon employees for drug abuse violations occurring in the workplace;

(3) Provide all employees engaged in performance of the contract with a copy of the statement required by subparagraph (b)(1) of this clause;

(4) Notify such employees in writing in the statement required by subparagraph (b)(1) of this clause that, as a condition of continued employment on this contract, the employee will--

(i) Abide by the terms of the statement; and

(ii) Notify the employer in writing of the employee's conviction under a criminal drug statute for a violation occurring in the workplace no later than 5 days after such conviction.

(5) Notify the Contracting Officer in writing within 10 days after receiving notice under subdivision (b)(4)(ii) of this clause, from an employee or otherwise receiving actual notice of such conviction. The notice shall include the position title of the employee;

(6) Within 30 days after receiving notice under subdivision (b)(4)(ii) of this clause of a conviction, take one of the following actions with respect to any employee who is convicted of a drug abuse violation occurring in the

workplace:

(i) Taking appropriate personnel action against such employee, up to and including termination; or

(ii) Require such employee to satisfactorily participate in a drug abuse assistance or rehabilitation program approved for such purposes by a Federal, State, or local health, law enforcement, or other appropriate agency; and

(7) Make a good faith effort to maintain a drug-free workplace through implementation of subparagraphs (b)(1) though (b)(6) of this clause.

(c) The Contractor, if an individual, agrees by award of the contract or acceptance of a purchase order, not to engage in the unlawful manufacture, distribution, dispensing, possession, or use of a controlled substance while performing this contract.

(d) In addition to other remedies available to the Government, the Contractor's failure to comply with the requirements of paragraph (b) or (c) of this clause may, pursuant to FAR 23.506, render the Contractor subject to suspension of contract payments, termination of the contract for default, and suspension or debarment.

(End of clause)

52.223-14 TOXIC CHEMICAL RELEASE REPORTING (OCT 2000)

(a) Unless otherwise exempt, the Contractor, as owner or operator of a facility used in the performance of this contract, shall file by July 1 for the prior calendar year an annual Toxic Chemical Release Inventory Form (Form R) as described in sections 313(a) and (g) of the Emergency Planning and Community Right-to-Know Act of 1986 (EPCRA) (42 U.S.C. 11023(a) and (g)), and section 6607 of the Pollution Prevention Act of 1990 (PPA) (42 U.S.C. 13106). The Contractor shall file, for each facility subject to the Form R filing and reporting requirements, the annual Form R throughout the life of the contract.

(b) A Contractor owned or operated facility used in the performance of this contract is exempt from the requirement to file an annual Form R if--

(1) The facility does not manufacture, process, or otherwise use any toxic chemicals listed under section 313(c) of EPCRA, 42 U.S.C. 11023(c);

(2) The facility does not have 10 or more full-time employees as specified in section 313(b)(1)(A) of EPCRA, 42 U.S.C. 11023(b)(1)(A);

(3) The facility does not meet the reporting thresholds of toxic chemicals established under of EPCRA, 42 U.S.C. 11023(f) (including the alternate thresholds at 40 CFR 372.27, provided an appropriate certification form has been filed with EPA);

(4) The facility does not fall within Standard Industrial Classification Code (SIC) major groups 20 through 39 or their corresponding North American Industry Classification System (NAICS) sectors 31 through 33; or

(5) The facility is not located within any State of the United States, the District of Columbia, the Commonwealth of Puerto Rico, Guam, American Samoa, the United States Virgin Islands, the Northern Mariana Islands, or any other territory or possession over which the United States has jurisdiction.

(c) If the Contractor has certified to an exemption in accordance with one or more of the criteria in paragraph (b) of this clause, and after award of the contract circumstances change so that any of its owned or operated facilities used in the performance of this contract is no longer exempt--

(1) The Contractor shall notify the Contracting Officer; and

(2) The Contractor, as owner or operator of a facility used in the performance of this contract that is no longer exempt, shall (i) submit a Toxic Chemical Release Inventory Form (Form R) on or before July 1 for the prior calendar year during which the facility becomes eligible; and (ii) continue to file the annual Form R for the life of the contract for such facility.

(d) The Contracting Officer may terminate this contract or take other action as appropriate, if the Contractor fails to comply accurately and fully with the EPCRA and PPA toxic chemical release filing and reporting requirements.

(e) Except for acquisitions of commercial items, as defined in FAR Part 2, the Contractor shall--

(1) For competitive subcontracts expected to exceed $100,000 (including all options), include a solicitation provision substantially the same as the provision at FAR 52.223-13, Certification of Toxic Chemical Release Reporting; and

(2) Include in any resultant subcontract exceeding $100,000 (including all options), the substance of this clause, except this paragraph (e).

52.225-11 BUY AMERICAN ACT--BALANCE OF PAYMENTS PROGRAM--CONSTRUCTION MATERIALS UNDER TRADE AGREEMENTS (FEB 2000)

(a) Definitions. As used in this clause--

Component means any article, material, or supply incorporated directly into construction materials.

Construction material means an article, material, or supply brought to the construction site by the Contractor or subcontractor for incorporation into the building or work. The term also includes an item brought to the site preassembled from articles, materials, or supplies. However, emergency life safety systems, such as emergency lighting, fire alarm, and audio evacuation systems, that are discrete systems incorporated into a public building or work and that are produced as complete systems, are evaluated as a single and distinct construction material regardless of when or how the individual parts or components of those systems are delivered to the construction site. Materials purchased directly by the Government are supplies, not construction material.

Cost of components means--

(1) For components purchased by the Contractor, the acquisition cost, including transportation costs to the place of incorporation into the end product (whether or not such costs are paid to a domestic firm), and any applicable duty (whether or not a duty-free entry certificate is issued); or

(2) For components manufactured by the Contractor, all costs associated with the manufacture of the component, including transportation costs as described in paragraph (1) of this definition, plus allocable overhead costs, but excluding profit. Cost of components does not include any costs associated with the manufacture of the end product.

Designated country means any of the following countries: Aruba, Austria, Bangladesh, Belgium, Benin, Bhutan, Botswana, Burkina Faso, Burundi, Canada, Cape Verde, Central African Republic, Chad, Comoros, Denmark.

Djibouti, Equatorial Guinea, Finland, France, Gambia, Germany, Greece, Guinea, Guinea-Bissau, Haiti, Hong Kong, Ireland, Israel, Italy, Japan.

Kiribati, Korea, Republic of, Lesotho, Liechtenstein, Luxembourg, Malawi, Maldives, Mali, Mozambique, Nepal, Netherlands, Niger, Norway, Portugal, Rwanda.

Sao Tome and Principe, Sierra Leone, Singapore, Somalia, Spain, Sweden, Switzerland, Tanzania U.R., Togo, Tuvalu, Uganda, United Kingdom, Vanuatu, Western Samoa, Yemen.

Designated country construction material means a construction material that--

(1) Is wholly the growth, product, or manufacture of a designated country; or

(2) In the case of a construction material that consists in whole or in part of materials from another country, has been substantially transformed in a designated country into a new and different construction material distinct from the materials from which it was transformed.

Domestic construction material means--

(1) An unmanufactured construction material mined or produced in the United States; or

(2) A construction material manufactured in the United States, if the cost of its components mined, produced, or manufactured in the United States exceeds 50 percent of the cost of all its components. Components of foreign origin of the same class or kind for which nonavailability determinations have been made are treated as domestic.

Foreign construction material means a construction material other than a domestic construction material.

North American Free Trade Agreement country means Canada or Mexico.

North American Free Trade Agreement country construction material means a construction material that--

(1) Is wholly the growth, product, or manufacture of a North American Free Trade Agreement (NAFTA) country; or

(2) In the case of a construction material that consists in whole or in part of materials from another country, has been substantially transformed in a NAFTA country into a new and different construction material distinct from the materials from which it was transformed.

United States means the 50 States and the District of Columbia, U.S. territories and possessions, Puerto Rico, the Northern Mariana Islands, and any other place subject to U.S. jurisdiction, but does not include leased bases.

(b) Construction materials. (1) This clause implements the Buy American Act (41 U.S.C. 10a-10d) and the Balance of Payments Program by providing a preference for domestic construction material. In addition, the Contracting Officer has determined that the Trade Agreements Act and the North American Free Trade Agreement (NAFTA) apply to this acquisition. Therefore, the Buy American Act and Balance of Payments Program restrictions are waived for designated country and NAFTA country construction materials.

(2) The Contractor shall use only domestic, designated country, or NAFTA country construction material in performing this contract, except as provided in paragraphs (b)(3) and (b)(4) of this clause.

(3) The requirement in paragraph (b)(2) of this clause does not apply to the construction materials or components listed by the Government as follows: None [Contracting Officer to list applicable excepted materials or indicate “none”]

(4) The Contracting Officer may add other foreign construction material to the list in paragraph (b)(3) of this clause if the Government determines that--

(i) The cost of domestic construction material would be unreasonable. The cost of a particular domestic construction material subject to the restrictions of the Buy American Act is unreasonable when the cost of such material exceeds the cost of foreign material by more than 6 percent. For determination of unreasonable cost under the Balance of Payments Program, the Contracting Officer will use a factor of 50 percent;

(ii) The application of the restriction of the Buy American Act or Balance of Payments Program to a particular construction material would be impracticable or inconsistent with the public interest; or

(iii) The construction material is not mined, produced, or manufactured in the United States in sufficient and reasonably available commercial quantities of a satisfactory quality.

(c) Request for determination of inapplicability of the Buy American Act or Balance of Payments Program. (1)(i) Any Contractor request to use foreign construction material in accordance with paragraph (b)(4) of this clause shall include adequate information for Government evaluation of the request, including--

(A) A description of the foreign and domestic construction materials;

(B) Unit of measure;

(C) Quantity;

(D) Price;

(E) Time of delivery or availability;

(F) Location of the construction project;

(G) Name and address of the proposed supplier; and

(H) A detailed justification of the reason for use of foreign construction materials cited in accordance with paragraph (b)(3) of this clause.

(ii) A request based on unreasonable cost shall include a reasonable survey of the market and a completed price comparison table in the format in paragraph (d) of this clause.

(iii) The price of construction material shall include all delivery costs to the construction site and any applicable duty (whether or not a duty-free certificate may be issued).

(iv) Any Contractor request for a determination submitted after contract award shall explain why the Contractor could not reasonably foresee the need for such determination and could not have requested the determination before contract award. If the Contractor does not submit a satisfactory explanation, the Contracting Officer need not make a determination.

(2) If the Government determines after contract award that an exception to the Buy American Act or Balance of Payments Program applies and the Contracting Officer and the Contractor negotiate adequate consideration, the Contracting Officer will modify the contract to allow use of the foreign construction material. However, when the basis for the exception is the unreasonable price of a domestic construction material, adequate consideration is not less than the differential established in paragraph (b)(4)(i) of this clause.

(3) Unless the Government determines that an exception to the Buy American Act or Balance of Payments Program applies, use of foreign construction material is noncompliant with the Buy American Act or Balance of Payments Program.

(d) Data. To permit evaluation of requests under paragraph (c) of this clause based on unreasonable cost, the Contractor shall include the following information and any applicable supporting data based on the survey of suppliers:

Foreign and Domestic Construction Materials Price Comparison

Construction material description	Unit of measure	Quantity	Price (dollars) \1\
Item 1:			
Foreign construction material....	.....	.....	.....
Domestic construction material...	.....	.....	.....
Item 2:			

Foreign construction material.... ....
Domestic construction material... ....

\1\ Include all delivery costs to the construction site and any applicable duty (whether or not a duty-free entry certificate is issued).

List name, address, telephone number, and contact for suppliers surveyed. Attach copy of response; if oral, attach summary.

Include other applicable supporting information.

(End of clause)

52.225-13 RESTRICTIONS ON CERTAIN FOREIGN PURCHASES (JUL 2000)

(a) The Contractor shall not acquire, for use in the performance of this contract, any supplies or services originating from sources within, or that were located in or transported from or through, countries whose products are banned from importation into the United States under regulations of the Office of Foreign Assets Control, Department of the Treasury. Those countries are Cuba, Iran, Iraq, Libya, North Korea, Sudan, the territory of Afghanistan controlled by the Taliban, and Serbia (excluding the territory of Kosovo).

(b) The Contractor shall not acquire for use in the performance of this contract any supplies or services from entities controlled by the government of Iraq.

(c) The Contractor shall insert this clause, including this paragraph (c), in all subcontracts.

(End of clause)

52.227-1 AUTHORIZATION AND CONSENT (JUL 1995)

(a) The Government authorizes and consents to all use and manufacture, in performing this contract or any subcontract at any tier, of any invention described in and covered by a United States patent (1) embodied in the structure or composition of any article the delivery of which is accepted by the Government under this contract or (2) used in machinery, tools, or methods whose use necessarily results from compliance by the Contractor or a subcontractor with (i) specifications or written provisions forming a part of this contract or (ii) specific written instructions given by the Contracting Officer directing the manner of performance. The entire liability to the Government for infringement of a patent of the United States shall be determined solely by the provisions of the indemnity clause, if any, included in this contract or any subcontract hereunder (including any lower-tier subcontract), and the Government assumes liability for all other infringement to the extent of the authorization and consent hereinabove granted.

(b) The Contractor agrees to include, and require inclusion of, this clause, suitably modified to identify the parties, in all subcontracts at any tier for supplies or services (including construction, architect-engineer services, and materials, supplies, models, samples, and design or testing services expected to exceed the simplified acquisition threshold (however, omission of this clause from any subcontract, including those at or below the simplified acquisition threshold, does not affect this authorization and consent.)

52.227-2 NOTICE AND ASSISTANCE REGARDING PATENT AND COPYRIGHT INFRINGEMENT (AUG 1996)

(a) The Contractor shall report to the Contracting Officer, promptly and in reasonable written detail, each notice or claim of patent or copyright infringement based on the performance of this contract of which the Contractor has

knowledge.

(b) In the event of any claim or suit against the Government on account of any alleged patent or copyright infringement arising out of the performance of this contract or out of the use of any supplies furnished or work or services performed under this contract, the Contractor shall furnish to the Government, when requested by the Contracting Officer, all evidence and information in possession of the Contractor pertaining to such suit or claim. Such evidence and information shall be furnished at the expense of the Government except where the Contractor has agreed to indemnify the Government.

(c) The Contractor agrees to include, and require inclusion of, this clause in all subcontracts at any tier for supplies or services (including construction and architect-engineer subcontracts and those for material, supplies, models, samples, or design or testing services) expected to exceed the simplified acquisition threshold at (FAR) 2.101.to exceed the dollar amount set forth in 13.000 of the Federal Acquisition Regulation (FAR).

(End of clause)

52.227-4 PATENT INDEMNITY--CONSTRUCTION CONTRACTS (APR 1984)

Except as otherwise provided, the Contractor agrees to indemnify the Government and its officers, agents, and employees against liability, including costs and expenses, for infringement upon any United States patent (except a patent issued upon an application that is now or may hereafter be withheld from issue pursuant to a Secrecy Order under 35 U.S.C. 181) arising out of performing this contract or out of the use or disposal by or for the account of the Government of supplies furnished or work performed under this contract.

52.228-2 ADDITIONAL BOND SECURITY (OCT 1997)

The Contractor shall promptly furnish additional security required to protect the Government and persons supplying labor or materials under this contract if--

(a) Any surety upon any bond, or issuing financial institution for other security, furnished with this contract becomes unacceptable to the Government.

(b) Any surety fails to furnish reports on its financial condition as required by the Government;

(c) The contract price is increased so that the penal sum of any bond becomes inadequate in the opinion of the Contracting Officer; or

(d) An irrevocable letter of credit (ILC) used as security will expire before the end of the period of required security. If the Contractor does not furnish an acceptable extension or replacement ILC, or other acceptable substitute, at least 30 days before an ILC's scheduled expiration, the Contracting officer has the right to immediately draw on the ILC.

52.228-11 PLEDGES OF ASSETS (FEB 1992)

(a) Offerors shall obtain from each person acting as an individual surety on a bid guarantee, a performance bond, or a payment bond--

(1) Pledge of assets; and

(2) Standard Form 28, Affidavit of Individual Surety.

(b) Pledges of assets from each person acting as an individual surety shall be in the form of--

(1) Evidence of an escrow account containing cash, certificates of deposit, commercial or Government securities, or other assets described in FAR 28.203-2 (except see 28.203-2(b)(2) with respect to Government securities held in

book entry form) and/or;

(2) A recorded lien on real estate. The offeror will be required to provide--

(i) Evidence of title in the form of a certificate of title prepared by a title insurance company approved by the United States Department of Justice. This title evidence must show fee simple title vested in the surety along with any concurrent owners; whether any real estate taxes are due and payable; and any recorded encumbrances against the property, including the lien filed in favor of the Government as required by FAR 28.203-3(d);

(ii) Evidence of the amount due under any encumbrance shown in the evidence of title;

(iii) A copy of the current real estate tax assessment of the property or a current appraisal dated no earlier than 6 months prior to the date of the bond, prepared by a professional appraiser who certifies that the appraisal has been conducted in accordance with the generally accepted appraisal standards as reflected in the Uniform Standards of Professional Appraisal Practice, as promulgated by the Appraisal Foundation.

(End of clause)

52.229-3 FEDERAL, STATE, AND LOCAL TAXES (JAN 1991)

(a) "Contract date," as used in this clause, means the date set for bid opening or, if this is a negotiated contract or a modification, the effective date of this contract or modification.

"All applicable Federal, State, and local taxes and duties," as used in this clause, means all taxes and duties, in effect on the contract date, that the taxing authority is imposing and collecting on the transactions or property covered by this contract.

"After-imposed Federal tax," as used in this clause, means any new or increased Federal excise tax or duty, or tax that was exempted or excluded on the contract date but whose exemption was later revoked or reduced during the contract period, on the transactions or property covered by this contract that the Contractor is required to pay or bear as the result of legislative, judicial, or administrative action taking effect after the contract date. It does not include social security tax or other employment taxes.

"After-relieved Federal tax," as used in this clause, means any amount of Federal excise tax or duty, except social security or other employment taxes, that would otherwise have been payable on the transactions or property covered by this contract, but which the Contractor is not required to pay or bear, or for which the Contractor obtains a refund or drawback, as the result of legislative, judicial, or administrative action taking effect after the contract date.

(b) The contract price includes all applicable Federal, State, and local taxes and duties.

(c) The contract price shall be increased by the amount of any after-imposed Federal tax, provided the Contractor warrants in writing that no amount for such newly imposed Federal excise tax or duty or rate increase was included in the contract price, as a contingency reserve or otherwise.

(d) The contract price shall be decreased by the amount of any after-relieved Federal tax.

(e) The contract price shall be decreased by the amount of any Federal excise tax or duty, except social security or other employment taxes, that the Contractor is required to pay or bear, or does not obtain a refund of, through the Contractor's fault, negligence, or failure to follow instructions of the Contracting Officer.

(f) No adjustment shall be made in the contract price under this clause unless the amount of the adjustment exceeds $250.

(g) The Contractor shall promptly notify the Contracting Officer of all matters relating to any Federal excise tax or duty that reasonably may be expected to result in either an increase or decrease in the contract price and shall take appropriate action as the Contracting Officer directs.

(h) The Government shall, without liability, furnish evidence appropriate to establish exemption from any Federal, State, or local tax when the Contractor requests such evidence and a reasonable basis exists to sustain the exemption.

(End of clause)

52.229-5 TAXES--CONTRACTS PERFORMED IN U.S. POSSESSIONS OR PUERTO RICO (APR 1984)

The term "local taxes," as used in the Federal, State, and local taxes clause of this contract, includes taxes imposed by a possession of the United States or by Puerto Rico.

(End of clause)

52.232-5 PAYMENTS UNDER FIXED-PRICE CONSTRUCTION CONTRACTS (MAY 1997)

(a) Payment of price. The Government shall pay the Contractor the contract price as provided in this contract.

(b) Progress payments. The Government shall make progress payments monthly as the work proceeds, or at more frequent intervals as determined by the Contracting Officer, on estimates of work accomplished which meets the standards of quality established under the contract, as approved by the Contracting Officer.

(1) The Contractor's request for progress payments shall include the following substantiation:

(i) An itemization of the amounts requested, related to the various elements of work required by the contract covered by the payment requested.

(ii) A listing of the amount included for work performed by each subcontractor under the contract.

(iii) A listing of the total amount of each subcontract under the contract.

(iv) A listing of the amounts previously paid to each such subcontractor under the contract.

(v) Additional supporting data in a form and detail required by the Contracting Officer.

(2) In the preparation of estimates, the Contracting Officer may authorize material delivered on the site and preparatory work done to be taken into consideration. Material delivered to the Contractor at locations other than the site also may be taken into consideration if--

(i) Consideration is specifically authorized by this contract; and

(ii) The Contractor furnishes satisfactory evidence that it has acquired title to such material and that the material will be used to perform this contract.

(c) Contractor certification. Along with each request for progress payments, the Contractor shall furnish the following certification, or payment shall not be made: (However, if the Contractor elects to delete paragraph (c)(4) from the certification, the certification is still acceptable.)

I hereby certify, to the best of my knowledge and belief, that--

(1) The amounts requested are only for performance in accordance with the specifications, terms, and conditions of the contract;

(2) Payments to subcontractors and suppliers have been made from previous payments received under the contract, and timely payments will be made from the proceeds of the payment covered by this certification, in accordance with subcontract agreements and the requirements of chapter 39 of Title 31, United States Code;

(3) This request for progress payments does not include any amounts which the prime contractor intends to withhold or retain from a subcontractor or supplier in accordance with the terms and conditions of the subcontract; and

(4) This certification is not to be construed as final acceptance of a subcontractor's performance.

_____

(Name)

_____

(Title)

_____

(Date)

(d) Refund of unearned amounts. If the Contractor, after making a certified request for progress payments, discovers that a portion or all of such request constitutes a payment for performance by the Contractor that fails to conform to the specifications, terms, and conditions of this contract (hereinafter referred to as the "unearned amount"), the Contractor shall--

(1) Notify the Contracting Officer of such performance deficiency; and

(2) Be obligated to pay the Government an amount (computed by the Contracting Officer in the manner provided in paragraph (j) of this clause) equal to interest on the unearned amount from the 8th day after the date of receipt of the unearned amount until--

(i) The date the Contractor notifies the Contracting Officer that the performance deficiency has been corrected; or

(ii) The date the Contractor reduces the amount of any subsequent certified request for progress payments by an amount equal to the unearned amount.

(e) Retainage. If the Contracting Officer finds that satisfactory progress was achieved during any period for which a progress payment is to be made, the Contracting Officer shall authorize payment to be made in full. However, if satisfactory progress has not been made, the Contracting Officer may retain a maximum of 10 percent of the amount of the payment until satisfactory progress is achieved. When the work is substantially complete, the Contracting Officer may retain from previously withheld funds and future progress payments that amount the Contracting Officer considers adequate for protection of the Government and shall release to the Contractor all the remaining withheld funds. Also, on completion and acceptance of each separate building, public work, or other division of the contract, for which the price is stated separately in the contract, payment shall be made for the completed work without retention of a percentage.

(f) Title, liability, and reservation of rights. All material and work covered by progress payments made shall, at the time of payment, become the sole property of the Government, but this shall not be construed as--

(1) Relieving the Contractor from the sole responsibility for all material and work upon which payments have been made or the restoration of any damaged work; or

(2) Waiving the right of the Government to require the fulfillment of all of the terms of the contract.

(g) Reimbursement for bond premiums. In making these progress payments, the Government shall, upon request, reimburse the Contractor for the amount of premiums paid for performance and payment bonds (including coinsurance and reinsurance agreements, when applicable) after the Contractor has furnished evidence of full payment to the surety. The retainage provisions in paragraph (e) of this clause shall not apply to that portion of progress payments attributable to bond premiums.

(h) Final payment. The Government shall pay the amount due the Contractor under this contract after--

(1) Completion and acceptance of all work;

(2) Presentation of a properly executed voucher; and

(3) Presentation of release of all claims against
the Government arising by virtue of this contract, other than claims, in stated amounts, that the Contractor has specifically excepted from the operation of the release. A release may also be required of the assignee if the Contractor's claim to amounts payable under this contract has been assigned under the Assignment of Claims Act of 1940 (31 U.S.C. 3727 and 41 U.S.C. 15).

(i) Limitation because of undefinitized work. Notwithstanding any provision of this contract, progress payments shall not exceed 80 percent on work accomplished on undefinitized contract actions. A "contract action" is any action resulting in a contract, as defined in FAR Subpart 2.1, including contract modifications for additional supplies or services, but not including contract modifications that are within the scope and under the terms of the contract, such as contract modifications issued pursuant to the Changes clause, or funding and other administrative changes.

(j) Interest computation on unearned amounts. In accordance with 31 U.S.C. 3903(c)(1), the amount payable under subparagraph (d)(2) of this clause shall be--

(1) Computed at the rate of average bond equivalent rates of 91-day Treasury bills auctioned at the most recent auction of such bills prior to the date the Contractor receives the unearned amount; and

(2) Deducted from the next available payment to the Contractor.

52.232-17 INTEREST (JUNE 1996)

(a) Except as otherwise provided in this contract under a Price Reduction for Defective Cost or Pricing Data clause or a Cost Accounting Standards clause, all amounts that become payable by the Contractor to the Government under this contract (net of any applicable tax credit under the Internal Revenue Code (26 U.S.C. 1481)) shall bear simple interest from the date due until paid unless paid within 30 days of becoming due. The interest rate shall be the interest rate established by the Secretary of the Treasury as provided in Section 12 of the Contract Disputes Act of 1978 (Public Law 95-563), which is applicable to the period in which the amount becomes due, as provided in paragraph (b) of this clause, and then at the rate applicable for each six-month period as fixed by the Secretary until the amount is paid. reproduce, prepare derivative works, distribute copies to the public, and (b) Amounts shall be due at the earliest of the following dates:

(1) The date fixed under this contract.

(2) The date of the first written demand for payment consistent with this contract, including any demand resulting from a default termination.

(3) The date the Government transmits to the Contractor a proposed supplemental agreement to confirm completed negotiations establishing the amount of debt.

(4) If this contract provides for revision of prices, the date of written notice to the Contractor stating the amount of refund payable in connection with a pricing proposal or a negotiated pricing agreement not confirmed by contract modification.

(c) The interest charge made under this clause may be reduced under the procedures prescribed in 32.614-2 of the Federal Acquisition Regulation in effect on the date of this contract.

52.232-23 ASSIGNMENT OF CLAIMS (JAN 1986)

(a) The Contractor, under the Assignment of Claims Act, as amended, 31 U.S.C. 3727, 41 U.S.C. 15 (hereafter referred to as "the Act"), may assign its rights to be paid amounts due or to become due as a result of the performance of this contract to a bank, trust company, or other financing institution, including any Federal lending agency. The assignee under such an assignment may thereafter further assign or reassign its right under the original assignment to any type of financing institution described in the preceding sentence.

(b) Any assignment or reassignment authorized under the Act and this clause shall cover all unpaid amounts payable under this contract, and shall not be made to more than one party, except that an assignment or reassignment may be made to one party as agent or trustee for two or more parties participating in the financing of this contract.

(c) The Contractor shall not furnish or disclose to any assignee under this contract any classified document (including this contract) or information related to work under this contract until the Contracting Officer authorizes such action in writing.

52.232-27 PROMPT PAYMENT FOR CONSTRUCTION CONTRACTS (MAY 2001)

Notwithstanding any other payment terms in this contract, the Government will make invoice payments and contract financing payments under the terms and conditions specified in this clause. Payment shall be considered as being made on the day a check is dated or the date of an electronic funds transfer. Definitions of pertinent terms are set forth in sections 2.101 and 32.902 of the Federal Acquisition Regulation. All days referred to in this clause are calendar days, unless otherwise specified. (However, see subparagraph (a)(3) concerning payments due on Saturdays, Sundays, and legal holidays.)

(a) Invoice payments. (1) Types of invoice payments. For purposes of this clause, there are several types of invoice payments that may occur under this contract, as follows:

(i) Progress payments, if provided for elsewhere in this contract, based on Contracting Officer approval of the estimated amount and value of work or services performed, including payments for reaching milestones in any project:

(A) The due date for making such payments shall be 14 days after receipt of the payment request by the designated billing office. If the designated billing office fails to annotate the payment request with the actual date of receipt at the time of receipt, the payment due date shall be the 14th day after the date of the Contractor's payment request, provided a proper payment request is received and there is no disagreement over quantity, quality, or Contractor compliance with contract requirements.

(B) The due date for payment of any amounts retained by the Contracting Officer in accordance with the clause at 52.232-5, Payments Under Fixed-Price Construction Contracts, shall be as specified in the contract or, if not specified, 30 days after approval for release to the Contractor by the Contracting Officer.

(ii) Final payments based on completion and acceptance of all work and presentation of release of all claims against the Government arising by virtue of the contract, and payments for partial deliveries that have been accepted by the Government (e.g., each separate building, public work, or other division of the contract for which the price is stated separately in the contract):

(A) The due date for making such payments shall be either the 30th day after receipt by the designated billing office of a proper invoice from the Contractor, or the 30th day after Government acceptance of the work or services completed by the Contractor, whichever is later. If the designated billing office fails to annotate the invoice with the date of actual receipt at the time of receipt, the invoice payment due date shall be the 30th day after the date of the Contractor's invoice, provided a proper invoice is received and there is no disagreement over quantity, quality, or

Contractor compliance with contract requirements.

(B) On a final invoice where the payment amount is subject to contract settlement actions (e.g., release of claims), acceptance shall be deemed to have occurred on the effective date of the contract settlement.

(2) Contractor's invoice. The Contractor shall prepare and submit invoices to the designated billing office specified in the contract. A proper invoice must include the items listed in subdivisions (a)(2)(i) through (a)(2)(ix) of this clause. If the invoice does not comply with these requirements, it shall be returned within 7 days after the date the designated billing office received the invoice, with a statement of the reasons why it is not a proper invoice. Untimely notification will be taken into account in computing any interest penalty owed the Contractor in the manner described in subparagraph (a)(4) of this clause.

(i) Name and address of the Contractor.

(ii) Invoice date. (The Contractor is encouraged to date invoices as close as possible to the date of mailing or transmission.)

(iii) Contract number or other authorization for work or services performed (including order number and contract line item number).

(iv) Description of work or services performed.

(v) Delivery and payment terms (e.g., prompt payment discount terms).

(vi) Name and address of Contractor official to whom payment is to be sent (must be the same as that in the contract or in a proper notice of assignment).

(vii) Name (where practicable), title, phone number, and mailing address of person to be notified in the event of a defective invoice.

(viii) For payments described in subdivision (a)(1)(i) of this clause, substantiation of the amounts requested and certification in accordance with the requirements of the clause at 52.232-5, Payments Under Fixed-Price Construction Contracts.

(ix) Any other information or documentation required by the contract.

(x) While not required, the Contractor is strongly encouraged to assign an identification number to each invoice.

(3) Interest penalty. An interest penalty shall be paid automatically by the designated payment office, without request from the Contractor, if payment is not made by the due date and the conditions listed in subdivisions (a)(3)(i) through (a)(3)(iii) of this clause are met, if applicable. However, when the due date falls on a Saturday, Sunday, or legal holiday when Federal Government offices are closed and Government business is not expected to be conducted, payment may be made on the following business day without incurring a late payment interest penalty.

(i) A proper invoice was received by the designated billing office.

(ii) A receiving report or other Government documentation authorizing payment was processed and there was no disagreement over quantity, quality, Contractor compliance with any contract term or condition, or requested progress payment amount.

(iii) In the case of a final invoice for any balance of funds due the Contractor for work or services performed, the amount was not subject to further contract settlement actions between the Government and the Contractor.

(4) Computing penalty amount. The interest penalty shall be at the rate established by the Secretary of the Treasury under section 12 of the Contract Disputes Act of 1978 (41 U.S.C. 611) that is in effect on the day after the due date,

except where the interest penalty is prescribed by other governmental authority (e.g., tariffs). This rate is referred to as the "Renegotiation Board Interest Rate," and it is published in the Federal Register semiannually on or about January 1 and July 1. The interest penalty shall accrue daily on the invoice principal payment amount approved by the Government until the payment date of such approved principal amount; and will be compounded in 30-day increments inclusive from the first day after the due date through the payment date. That is, interest accrued at the end of any 30-day period will be added to the approved invoice principal payment amount and will be subject to interest penalties if not paid in the succeeding 30-day period. If the designated billing office failed to notify the Contractor of a defective invoice within the periods prescribed in subparagraph (a)(2) of this clause, the due date on the corrected invoice will be adjusted by subtracting from such date the number of days taken beyond the prescribed notification of defects period. Any interest penalty owed the Contractor will be based on this adjusted due date. Adjustments will be made by the designated payment office for errors in calculating interest penalties.

(i) For the sole purpose of computing an interest penalty that might be due the Contractor for payments described in subdivision (a)(1)(ii) of this clause, Government acceptance or approval shall be deemed to have occurred constructively on the 7th day after the Contractor has completed the work or services in accordance with the terms and conditions of the contract. In the event that actual acceptance or approval occurs within the constructive acceptance or approval period, the determination of an interest penalty shall be based on the actual date of acceptance or approval. Constructive acceptance or constructive approval requirements do not apply if there is a disagreement over quantity, quality, or Contractor compliance with a contract provision. These requirements also do not compel Government officials to accept work or services, approve Contractor estimates, perform contract administration functions, or make payment prior to fulfilling their responsibilities.

(ii) The following periods of time will not be included in the determination of an interest penalty:

(A) The period taken to notify the Contractor of defects in invoices submitted to the Government, but this may not exceed 7 days.

(B) The period between the defects notice and resubmission of the corrected invoice by the Contractor.

(C) For incorrect electronic funds transfer (EFT) information, in accordance with the EFT clause of this contract.

(iii) Interest penalties will not continue to accrue after the filing of a claim for such penalties under the clause at 52.233-1, Disputes, or for more than 1 year. Interest penalties of less than $1 need not be paid.

(iv) Interest penalties are not required on payment delays due to disagreement between the Government and the Contractor over the payment amount or other issues involving contract compliance, or on amounts temporarily withheld or retained in accordance with the terms of the contract. Claims involving disputes, and any interest that may be payable, will be resolved in accordance with the clause at 52.233-1, Disputes.

(5) Prompt payment discounts. An interest penalty also shall be paid automatically by the designated payment office, without request from the Contractor, if a discount for prompt payment is taken improperly. The interest penalty will be calculated on the amount of discount taken for the period beginning with the first day after the end of the discount period through the date when the Contractor is paid.

(6) Additional interest penalty. (i) If this contract was awarded on or after October 1, 1989, a penalty amount, calculated in accordance with subdivision (a)(6)(iii) of this clause, shall be paid in addition to the interest penalty amount if the Contractor--

(A) Is owed an interest penalty of $1 or more;

(B) Is not paid the interest penalty within 10 days after the date the invoice amount is paid; and

(C) Makes a written demand to the designated payment office for additional penalty payment, in accordance with subdivision (a)(6)(ii) of this clause, postmarked not later than 40 days after the date the invoice amount is paid.

(ii)(A) Contractors shall support written demands for additional penalty payments with the following data. No

additional data shall be required. Contractors shall--

(1) Specifically assert that late payment interest is due under a specific invoice, and request payment of all overdue late payment interest penalty and such additional penalty as may be required;

(2) Attach a copy of the invoice on which the unpaid late payment interest was due; and

(3) State that payment of the principal has been received, including the date of receipt.

(B) Demands must be postmarked on or before the 40th day after payment was made, except that--

(1) If the postmark is illegible or nonexistent, the demand must have been received and annotated with the date of receipt by the designated payment office on or before the 40th day after payment was made; or

(2) If the postmark is illegible or nonexistent and the designated payment office fails to make the required annotation, the demand's validity will be determined by the date the Contractor has placed on the demand; provided such date is no later than the 40th day after payment was made.

(iii)(A) The additional penalty shall be equal to 100 percent of any original late payment interest penalty, except--

(1) The additional penalty shall not exceed $5,000;

(2) The additional penalty shall never be less than $25; and

(3) No additional penalty is owed if the amount of the underlying interest penalty is less than $1.

(B) If the interest penalty ceases to accrue in accordance with the limits stated in subdivision (a)(4)(iii) of this clause, the amount of the additional penalty shall be calculated on the amount of interest penalty that would have accrued in the absence of these limits, subject to the overall limits on the additional penalty specified in subdivision (a)(6)(iii)(A) of this clause.

(C) For determining the maximum and minimum additional penalties, the test shall be the interest penalty due on each separate payment made for each separate contract. The maximum and minimum additional penalty shall not be based upon individual invoices unless the invoices are paid separately. Where payments are consolidated for disbursing purposes, the maximum and minimum additional penalty determination shall be made separately for each contract therein.

(D) The additional penalty does not apply to payments regulated by other Government regulations (e.g., payments under utility contracts subject to tariffs and regulation).

(b) Contract financing payments. (1) Due dates for recurring financing payments. If this contract provides for contract financing, requests for payment shall be submitted to the designated billing office as specified in this contract or as directed by the Contracting Officer. Contract financing payments shall be made on the [insert day as prescribed by Agency head; if not prescribed, insert 30th day] day after receipt of a proper contract financing request by the designated billing office. In the event that an audit or other review of a specific financing request is required to ensure compliance with the terms and conditions of the contract, the designated payment office is not compelled to make payment by the due date specified.

(2) Due dates for other contract financing. For advance payments, loans, or other arrangements that do not involve recurring submissions of contract financing requests, payment shall be made in accordance with the corresponding contract terms or as directed by the Contracting Officer.

(3) Interest penalty not applicable. Contract financing payments shall not be assessed an interest penalty for payment delays.

(c) Subcontract clause requirements. The Contractor shall include in each subcontract for property or services

(including a material supplier) for the purpose of performing this contract the following:

(1) Prompt payment for subcontractors. A payment clause that obligates the Contractor to pay the subcontractor for satisfactory performance under its subcontract not later than 7 days from receipt of payment out of such amounts as are paid to the Contractor under this contract.

(2) Interest for subcontractors. An interest penalty clause that obligates the Contractor to pay to the subcontractor an interest penalty for each payment not made in accordance with the payment clause--

(i) For the period beginning on the day after the required payment date and ending on the date on which payment of the amount due is made; and

(ii) Computed at the rate of interest established by the Secretary of the Treasury, and published in the Federal Register, for interest payments under section 12 of the Contract Disputes Act of 1978 (41 U.S.C. 611) in effect at the time the Contractor accrues the obligation to pay an interest penalty.

(3) Subcontractor clause flowdown. A clause requiring each subcontractor to include a payment clause and an interest penalty clause conforming to the standards set forth in subparagraphs (c)(1) and (c)(2) of this clause in each of its subcontracts, and to require each of its subcontractors to include such clauses in their subcontracts with each lower-tier subcontractor or supplier.

(d) Subcontract clause interpretation. The clauses required by paragraph (c) of this clause shall not be construed to impair the right of the Contractor or a subcontractor at any tier to negotiate, and to include in their subcontract, provisions that--

(1) Retainage permitted. Permit the Contractor or a subcontractor to retain (without cause) a specified percentage of each progress payment otherwise due to a subcontractor for satisfactory performance under the subcontract without incurring any obligation to pay a late payment interest penalty, in accordance with terms and conditions agreed to by the parties to the subcontract, giving such recognition as the parties deem appropriate to the ability of a subcontractor to furnish a performance bond and a payment bond;

(2) Withholding permitted. Permit the Contractor or subcontractor to make a determination that part or all of the subcontractor's request for payment may be withheld in accordance with the subcontract agreement; and

(3) Withholding requirements. Permit such withholding without incurring any obligation to pay a late payment penalty if--

(i) A notice conforming to the standards of paragraph (g) of this clause previously has been furnished to the subcontractor; and

(ii) A copy of any notice issued by a Contractor pursuant to subdivision (d)(3)(i) of this clause has been furnished to the Contracting Officer.

(e) Subcontractor withholding procedures. If a Contractor, after making a request for payment to the Government but before making a payment to a subcontractor for the subcontractor's performance covered by the payment request, discovers that all or a portion of the payment otherwise due such subcontractor is subject to withholding from the subcontractor in accordance with the subcontract agreement, then the Contractor shall--

(1) Subcontractor notice. Furnish to the subcontractor a notice conforming to the standards of paragraph (g) of this clause as soon as practicable upon ascertaining the cause giving rise to a withholding, but prior to the due date for subcontractor payment;

(2) Contracting Officer notice. Furnish to the Contracting Officer, as soon as practicable, a copy of the notice furnished to the subcontractor pursuant to subparagraph (e)(1) of this clause;

(3) Subcontractor progress payment reduction. Reduce the subcontractor's progress payment by an amount not to

exceed the amount specified in the notice of withholding furnished under subparagraph (e)(1) of this clause;

(4) Subsequent subcontractor payment. Pay the subcontractor as soon as practicable after the correction of the identified subcontract performance deficiency, and--

(i) Make such payment within--

(A) Seven days after correction of the identified subcontract performance deficiency (unless the funds therefor must be recovered from the Government because of a reduction under subdivision (e)(5)(i)) of this clause; or

(B) Seven days after the Contractor recovers such funds from the Government; or

(ii) Incur an obligation to pay a late payment interest penalty computed at the rate of interest established by the Secretary of the Treasury, and published in the Federal Register, for interest payments under section 12 of the Contracts Disputes Act of 1978 (41 U.S.C. 611) in effect at the time the Contractor accrues the obligation to pay an interest penalty;

(5) Notice to Contracting Officer. Notify the Contracting Officer upon--

(i) Reduction of the amount of any subsequent certified application for payment; or

(ii) Payment to the subcontractor of any withheld amounts of a progress payment, specifying--

(A) The amounts withheld under subparagraph (e)(1) of this clause; and

(B) The dates that such withholding began and ended; and

(6) Interest to Government. Be obligated to pay to the Government an amount equal to interest on the withheld payments (computed in the manner provided in 31 U.S.C. 3903(c)(1)), from the 8th day after receipt of the withheld amounts from the Government until--

(i) The day the identified subcontractor performance deficiency is corrected; or

(ii) The date that any subsequent payment is reduced under subdivision (e)(5)(i) of this clause.

(f) Third-party deficiency reports. (1) Withholding from subcontractor. If a Contractor, after making payment to a first-tier subcontractor, receives from a supplier or subcontractor of the first-tier subcontractor (hereafter referred to as a "second-tier subcontractor") a written notice in accordance with section 2 of the Act of August 24, 1935 (40 U.S.C. 270b, Miller Act), asserting a deficiency in such first-tier subcontractor's performance under the contract for which the Contractor may be ultimately liable, and the Contractor determines that all or a portion of future payments otherwise due such first-tier subcontractor is subject to withholding in accordance with the subcontract agreement, the Contractor may, without incurring an obligation to pay an interest penalty under subparagraph (e)(6) of this clause--

(i) Furnish to the first-tier subcontractor a notice conforming to the standards of paragraph (g) of this clause as soon as practicable upon making such determination; and

(ii) Withhold from the first-tier subcontractor's next available progress payment or payments an amount not to exceed the amount specified in the notice of withholding furnished under subdivision (f)(1)(i) of this clause.

(2) Subsequent payment or interest charge. As soon as practicable, but not later than 7 days after receipt of satisfactory written notification that the identified subcontract performance deficiency has been corrected, the Contractor shall--

(i) Pay the amount withheld under subdivision (f)(1)(ii) of this clause to such first-tier subcontractor; or

(ii) Incur an obligation to pay a late payment interest penalty to such first-tier subcontractor computed at the rate of interest established by the Secretary of the Treasury, and published in the Federal Register, for interest payments under section 12 of the Contracts Disputes Act of 1978 (41 U.S.C. 611) in effect at the time the Contractor accrues the obligation to pay an interest penalty.

(g) Written notice of subcontractor withholding. A written notice of any withholding shall be issued to a subcontractor (with a copy to the Contracting Officer of any such notice issued by the Contractor), specifying--

(1) The amount to be withheld;

(2) The specific causes for the withholding under the terms of the subcontract; and

(3) The remedial actions to be taken by the subcontractor in order to receive payment of the amounts withheld.

(h) Subcontractor payment entitlement. The Contractor may not request payment from the Government of any amount withheld or retained in accordance with paragraph (d) of this clause until such time as the Contractor has determined and certified to the Contracting Officer that the subcontractor is entitled to the payment of such amount.

(i) Prime-subcontractor disputes. A dispute between the Contractor and subcontractor relating to the amount or entitlement of a subcontractor to a payment or a late payment interest penalty under a clause included in the subcontract pursuant to paragraph (c) of this clause does not constitute a dispute to which the United States is a party. The United States may not be interpleaded in any judicial or administrative proceeding involving such a dispute.

(j) Preservation of prime-subcontractor rights. Except as provided in paragraph (i) of this clause, this clause shall not limit or impair any contractual, administrative, or judicial remedies otherwise available to the Contractor or a subcontractor in the event of a dispute involving late payment or nonpayment by the Contractor or deficient subcontract performance or nonperformance by a subcontractor.

(k) Non-recourse for prime contractor interest penalty. The Contractor's obligation to pay an interest penalty to a subcontractor pursuant to the clauses included in a subcontract under paragraph (c) of this clause shall not be construed to be an obligation of the United States for such interest penalty. A cost-reimbursement claim may not include any amount for reimbursement of such interest penalty.

52.232-29 Terms for Financing of Purchases of Commercial Items. (OCT 1995)

(a) Contractor entitlement to financing payments. The Contractor may request, and the Government shall pay, a contract financing payment as specified elsewhere in this contract when: the payment requested is properly due in accordance with this contract; the supplies deliverable or services due under the contract will be delivered or performed in accordance with the contract; and there has been no impairment or diminution of the Government's security under this contract.

(b) Special terms regarding termination for cause. If this contract is terminated for cause, the Contractor shall, on demand, repay to the Government the amount of unliquidated contract financing payments. The Government shall be liable for no payment except as provided by the Termination for Cause paragraph of the clause at 52.212-4, Contract Terms and Conditions--Commercial Items.

(c) Security for Government financing. In the event the Contractor fails to provide adequate security, as required in this contract, no financing payment shall be made under this contract. Upon receipt of adequate security, financing payments shall be made, including all previous payments to which the Contractor is entitled, in accordance with the terms of the provisions for contract financing. If at any time the Contracting Officer determines that the security provided by the Contractor is insufficient, the Contractor shall promptly provide such additional security as the Contracting Officer determines necessary. In the event the Contractor fails to provide such additional security, the Contracting Officer may collect or liquidate such security that has been provided and suspend further payments to the Contractor; and the Contractor shall repay to the Government the amount of unliquidated financing payments as

the Contracting Officer at his sole discretion deems repayable.

(d) Reservation of rights.

(1) No payment or other action by the Government under this clause shall (i) excuse the Contractor from performance of obligations under this contract, or (ii) constitute a waiver of any of the rights or remedies of the parties under the contract.

(2) The Government's rights and remedies under this clause (i) shall not be exclusive, but rather shall be in addition to any other rights and remedies provided by law or this contract; and (ii) shall not be affected by delayed, partial, or omitted exercise of any right, remedy, power, or privilege, nor shall such exercise or any single exercise preclude or impair any further exercise under this clause or the exercise of any other right, power, or privilege of the Government.

(e) Content of Contractor's request for financing payment. The Contractor's request for financing payment shall contain the following:

(1) The name and address of the Contractor;

(2) The date of the request for financing payment;

(3) The contract number and/or other identifier of the contract or order under which the request is made; and

(4) An appropriately itemized and totaled statement of the financing payments requested and such other information as is necessary for computation of the payment, prepared in accordance with the direction of the Contracting Officer.

(f) Limitation on frequency of financing payments. Contractor financing payments shall be provided no more frequently than monthly. -

(g) In the event of any conflict between the terms proposed by the offeror in response to an invitation to propose financing terms (52.232-31) and the terms in this clause, the terms of this clause shall govern.

52.232-33 PAYMENT BY ELECTRONIC FUNDS TRANSFER—CENTRAL CONTRACTOR REGISTRATION (MAY 1999)

(a) Method of payment. (1) All payments by the Government under this contract shall be made by electronic funds transfer (EFT), except as provided in paragraph (a)(2) of this clause. As used in this clause, the term “EFT” refers to the funds transfer and may also include the payment information transfer.

(2) In the event the Government is unable to release one or more payments by EFT, the Contractor agrees to either--

(i) Accept payment by check or some other mutually agreeable method of payment; or

(ii) Request the Government to extend the payment due date until such time as the Government can make payment by EFT (but see paragraph (d) of this clause).

(b) Contractor's EFT information. The Government shall make payment to the Contractor using the EFT information contained in the Central Contractor Registration (CCR) database. In the event that the EFT information changes, the Contractor shall be responsible for providing the updated information to the CCR database.

(c) Mechanisms for EFT payment. The Government may make payment by EFT through either the Automated Clearing House (ACH) network, subject to the rules of the National Automated Clearing House Association, or the Fedwire Transfer System. The rules governing Federal payments through the ACH are contained in 31 CFR part 210.

(d) Suspension of payment. If the Contractor's EFT information in the CCR database is incorrect, then the Government need not make payment to the Contractor under this contract until correct EFT information is entered into the CCR database; and any invoice or contract financing request shall be deemed not to be a proper invoice for the purpose of prompt payment under this contract. The prompt payment terms of the contract regarding notice of an improper invoice and delays in accrual of interest penalties apply.

(e) Contractor EFT arrangements. If the Contractor has identified multiple payment receiving points (i.e., more than one remittance address and/or EFT information set) in the CCR database, and the Contractor has not notified the Government of the payment receiving point applicable to this contract, the Government shall make payment to the first payment receiving point (EFT information set or remittance address as applicable) listed in the CCR database.

(f) Liability for uncompleted or erroneous transfers. (1) If an uncompleted or erroneous transfer occurs because the Government used the Contractor's EFT information incorrectly, the Government remains responsible for--

(i) Making a correct payment;

(ii) Paying any prompt payment penalty due; and

(iii) Recovering any erroneously directed funds.

(2) If an uncompleted or erroneous transfer occurs because the Contractor's EFT information was incorrect, or was revised within 30 days of Government release of the EFT payment transaction instruction to the Federal Reserve System, and--

(i) If the funds are no longer under the control of the payment office, the Government is deemed to have made payment and the Contractor is responsible for recovery of any erroneously directed funds; or

(ii) If the funds remain under the control of the payment office, the Government shall not make payment, and the provisions of paragraph (d) of this clause shall apply.

(g) EFT and prompt payment. A payment shall be deemed to have been made in a timely manner in accordance with the prompt payment terms of this contract if, in the EFT payment transaction instruction released to the Federal Reserve System, the date specified for settlement of the payment is on or before the prompt payment due date, provided the specified payment date is a valid date under the rules of the Federal Reserve System.

(h) EFT and assignment of claims. If the Contractor assigns the proceeds of this contract as provided for in the assignment of claims terms of this contract, the Contractor shall require as a condition of any such assignment, that the assignee shall register in the CCR database and shall be paid by EFT in accordance with the terms of this clause. In all respects, the requirements of this clause shall apply to the assignee as if it were the Contractor. EFT information that shows the ultimate recipient of the transfer to be other than the Contractor, in the absence of a proper assignment of claims acceptable to the Government, is incorrect EFT information within the meaning of paragraph (d) of this clause.

(i) Liability for change of EFT information by financial agent. The Government is not liable for errors resulting from changes to EFT information made by the Contractor's financial agent.

(j) Payment information. The payment or disbursing office shall forward to the Contractor available payment information that is suitable for transmission as of the date of release of the EFT instruction to the Federal Reserve System. The Government may request the Contractor to designate a desired format and method(s) for delivery of payment information from a list of formats and methods the payment office is capable of executing. However, the Government does not guarantee that any particular format or method of delivery is available at any particular payment office and retains the latitude to use the format and delivery method most convenient to the Government. If the Government makes payment by check in accordance with paragraph (a) of this clause, the Government shall mail the payment information to the remittance address contained in the CCR database.

(End of Clause)

52.233-1 Disputes. (DEC 1998)

(a) This contract is subject to the Contract Disputes Act of 1978, as amended (41 U.S.C. 601-613).

(b) Except as provided in the Act, all disputes arising under or relating to this contract shall be resolved under this clause.

(c) "Claim," as used in this clause, means a written demand or written assertion by one of the contracting parties seeking, as a matter of right, the payment of money in a sum certain, the adjustment or interpretation of contract terms, or other relief arising under or relating to this contract. A claim arising under a contract, unlike a claim relating to that contract, is a claim that can be resolved under a contract clause that provides for the relief sought by the claimant. However, a written demand or written assertion by the Contractor seeking the payment of money exceeding $100,000 is not a claim under the Act until certified as required by subparagraph (d)(2) of this clause. A voucher, invoice, or other routine request for payment that is not in dispute when submitted is not a claim under the Act. The submission may be converted to a claim under the Act, by complying with the submission and certification requirements of this clause, if it is disputed either as to liability or amount or is not acted upon in a reasonable time.

(d)(1) A claim by the Contractor shall be made in writing and, unless otherwise stated in this contract, submitted within 6 years after accrual of the claim to the Contracting Officer for a written decision. A claim by the Government against the Contractor shall be subject to a written decision by the Contracting Officer.

(2)(i) The contractors shall provide the certification specified in subparagraph (d)(2)(iii) of this clause when submitting any claim -

(A) Exceeding $100,000; or

(B) Regardless of the amount claimed, when using -

(1) Arbitration conducted pursuant to 5 U.S.C. 575-580; or

(2) Any other alternative means of dispute resolution (ADR) technique that the agency elects to handle in accordance with the Administrative Dispute Resolution Act (ADRA).

(ii) The certification requirement does not apply to issues in controversy that have not been submitted as all or part of a claim.

(iii) The certification shall state as follows: "I certify that the claim is made in good faith; that the supporting data are accurate and complete to the best of my knowledge and belief; that the amount requested accurately reflects the contract adjustment for which the Contractor believes the Government is liable; and that I am duly authorized to certify the claim on behalf of the Contractor.

(3) The certification may be executed by any person duly authorized to bind the Contractor with respect to the claim.

(e) For Contractor claims of $100,000 or less, the Contracting Officer must, if requested in writing by the Contractor, render a decision within 60 days of the request. For Contractor-certified claims over $100,000, the Contracting Officer must, within 60 days, decide the claim or notify the Contractor of the date by which the decision will be made.

(f) The Contracting Officer's decision shall be final unless the Contractor appeals or files a suit as provided in the Act.

(g) If the claim by the Contractor is submitted to the Contracting Officer or a claim by the Government is presented to the Contractor, the parties, by mutual consent, may agree to use alternative disput resolution (ADR). If the Contractor refuses an offer for ADR, the Contractor shall inform the Contracting Officer, in writing, of the

Contractor's specific reasons for rejecting the request.

(h) The Government shall pay interest on the amount found due and unpaid from (1) the date the Contracting Officer receives the claim (certified, if required); or (2) the date that payment otherwise would be due, if that date is later, until the date of payment. With regard to claims having defective certifications, as defined in (FAR) 48 CFR 33.201, interest shall be paid from the date that the Contracting Officer initially receives the claim. Simple interest on claims shall be paid at the rate, fixed by the Secretary of the Treasury as provided in the Act, which is applicable to the period during which the Contracting Officer receives the claim and then at the rate applicable for each 6-month period as fixed by the Treasury Secretary during the pendency of the claim.

(i) The Contractor shall proceed diligently with performance of this contract, pending final resolution of any request for relief, claim, appeal, or action arising under the contract, and comply with any decision of the Contracting Officer.

(End of clause)

52.233-3 PROTEST AFTER AWARD (AUG. 1996)

(a) Upon receipt of a notice of protest (as defined in FAR 33.101) or a determination that a protest is likely (see FAR 33.102(d)), the Contracting Officer may, by written order to the Contractor, direct the Contractor to stop performance of the work called for by this contract. The order shall be specifically identified as a stop-work order issued under this clause. Upon receipt of the order, the Contractor shall immediately comply with its terms and take all reasonable steps to minimize the incurrence of costs allocable to the work covered by the order during the period of work stoppage. Upon receipt of the final decision in the protest, the Contracting Officer shall either--

(1) Cancel the stop-work order; or

(2) Terminate the work covered by the order as provided in the Default, or the Termination for Convenience of the Government, clause of this contract.

(b) If a stop-work order issued under this clause is canceled either before or after a final decision in the protest, the Contractor shall resume work. The Contracting Officer shall make an equitable adjustment in the delivery schedule or contract price, or both, and the contract shall be modified, in writing, accordingly, if--

(1) The stop-work order results in an increase in the time required for, or in the Contractor's cost properly allocable to, the performance of any part of this contract; and

(2) The Contractor asserts its right to an adjustment within 30 days after the end of the period of work stoppage; provided, that if the Contracting Officer decides the facts justify the action, the Contracting Officer may receive and act upon a proposal at any time before final payment under this contract.

(c) If a stop-work order is not canceled and the work covered by the order is terminated for the convenience of the Government, the Contracting Officer shall allow reasonable costs resulting from the stop-work order in arriving at the termination settlement.

(d) If a stop-work order is not canceled and the work covered by the order is terminated for default, the Contracting Officer shall allow, by equitable adjustment or otherwise, reasonable costs resulting from the stop-work order.

(e) The Government's rights to terminate this contract at any time are not affected by action taken under this clause.

(f) If, as the result of the Contractor's intentional or negligent misstatement, misrepresentation, or miscertification, a protest related to this contract is sustained, and the Government pays costs, as provided in FAR 33.102(b)(2) or 33.104(h)(1), the Government may require the Contractor to reimburse the Government the amount of such costs. In addition to any other remedy available, and pursuant to the requirements of Subpart 32.6, the Government may collect this debt by offsetting the amount against any payment due the Contractor under any contract between the Contractor and the Government.

52.236-2 DIFFERING SITE CONDITIONS (APR 1984)

As prescribed in 36.502, insert the following clause in solicitations and contracts when a fixed-price construction contract or a fixed-price dismantling, demolition, or removal of improvements contract is contemplated and the contract amount is expected to exceed the small purchase limitation. The Contracting Officer may insert the clause in solicitations and contracts when a fixed-price construction or a fixed-price contract for dismantling, demolition, or removal of improvements is contemplated and the contract amount is expected to be within the small purchase limitation.

(a) The Contractor shall promptly, and before the conditions are disturbed, give a written notice to the Contracting Officer of

(1) subsurface or latent physical conditions at the site which differ materially from those indicated in this contract, or

(2) unknown physical conditions at the site, of an unusual nature, which differ materially from those ordinarily encountered and generally recognized as inhering in work of the character provided for in the contract.

(b) The Contracting Officer shall investigate the site conditions promptly after receiving the notice. If the conditions do materially so differ and cause an increase or decrease in the Contractor's cost of, or the time required for, performing any part of the work under this contract, whether or not changed as a result of the conditions, an equitable adjustment shall be made under this clause and the contract modified in writing accordingly.

(c) No request by the Contractor for an equitable adjustment to the contract under this clause shall be allowed, unless the Contractor has given the written notice required; provided, that the time prescribed in (a) above for giving written notice may be extended by the Contracting Officer.

(d) No request by the Contractor for an equitable adjustment to the contract for differing site conditions shall be allowed if made after final payment under this contract.

52.236-3 SITE INVESTIGATION AND CONDITIONS AFFECTING THE WORK (APR 1984)

(a) The Contractor acknowledges that it has taken steps reasonably necessary to ascertain the nature and location of the work, and that it has investigated and satisfied itself as to the general and local conditions which can affect the work or its cost, including but not limited to

(1) conditions bearing upon transportation, disposal, handling, and storage of materials;

(2) the availability of labor, water, electric power, and roads;

(3) uncertainties of weather, river stages, tides, or similar physical conditions at the site;

(4) the conformation and conditions of the ground; and (5) the character of equipment and facilities needed preliminary to and during work performance. The Contractor also acknowledges that it has satisfied itself as to the character, quality, and quantity of surface and subsurface materials or obstacles to be encountered insofar as this information is reasonably ascertainable from an inspection of the site, including all exploratory work done by the Government, as well as from the drawings and specifications made a part of this contract. Any failure of the Contractor to take the actions described and acknowledged in this paragraph will not relieve the Contractor from responsibility for estimating properly the difficulty and cost of successfully performing the work, or for proceeding to successfully perform the work without additional expense to the Government.

(b) The Government assumes no responsibility for any conclusions or interpretations made by the Contractor based on the information made available by the Government. Nor does the Government assume responsibility for any

understanding reached or representation made concerning conditions which can affect the work by any of its officers or agents before the execution of this contract, unless that understanding or representation is expressly stated in this contract.

52.236-5 MATERIAL AND WORKMANSHIP (APR 1984)

(a) All equipment, material, and articles incorporated into the work covered by this contract shall be new and of the most suitable grade for the purpose intended, unless otherwise specifically provided in this contract. References in the specifications to equipment, material, articles, or patented processes by trade name, make, or catalog number, shall be regarded as establishing a standard of quality and shall not be construed as limiting competition. The Contractor may, at its option, use any equipment, material, article, or process that, in the judgment of the Contracting Officer, is equal to that named in the specifications, unless otherwise specifically provided in this contract.

(b) The Contractor shall obtain the Contracting Officer's approval of the machinery and mechanical and other equipment to be incorporated into the work. When requesting approval, the Contractor shall furnish to the Contracting Officer the name of the manufacturer, the model number, and other information concerning the performance, capacity, nature, and rating of the machinery and mechanical and other equipment. When required by this contract or by the Contracting Officer, the Contractor shall also obtain the Contracting Officer's approval of the material or articles which the Contractor contemplates incorporating into the work. When requesting approval, the Contractor shall provide full information concerning the material or articles. When directed to do so, the Contractor shall submit samples for approval at the Contractor's expense, with all shipping charges prepaid. Machinery, equipment, material, and articles that do not have the required approval shall be installed or used at the risk of subsequent rejection.

(c) All work under this contract shall be performed in a skillful and workmanlike manner. The Contracting Officer may require, in writing, that the Contractor remove from the work any employee the Contracting Officer deems incompetent, careless, or otherwise objectionable.

52.236-6 SUPERINTENDENCE BY THE CONTRACTOR (APR 1984)

At all times during performance of this contract and until the work is completed and accepted, the Contractor shall directly superintend the work or assign and have on the worksite a competent superintendent who is satisfactory to the Contracting Officer and has authority to act for the Contractor.

52.236-7 PERMITS AND RESPONSIBILITIES (NOV 1991)

The Contractor shall, without additional expense to the Government, be responsible for obtaining any necessary licenses and permits, and for complying with any Federal, State, and municipal laws, codes, and regulations applicable to the performance of the work. The Contractor shall also be responsible for all damages to persons or property that occur as a result of the Contractor's fault or negligence. The Contractor shall also be responsible for all materials delivered and work performed until completion and acceptance of the entire work, except for any completed unit of work which may have been accepted under the contract.

52.236-8 OTHER CONTRACTS (APR 1984)

The Government may undertake or award other contracts for additional work at or near the site of the work under this contract. The Contractor shall fully cooperate with the other contractors and with Government employees and shall carefully adapt scheduling and performing the work under this contract to accommodate the additional work, heeding any direction that may be provided by the Contracting Officer. The Contractor shall not commit or permit any act that will interfere with the performance of work by any other contractor or by Government employees.

52.236-9 PROTECTION OF EXISTING VEGETATION, STRUCTURES, EQUIPMENT, UTILITIES, AND IMPROVEMENTS (APR 1984)

(a) The Contractor shall preserve and protect all structures, equipment, and vegetation (such as trees, shrubs, and grass) on or adjacent to the work site, which are not to be removed and which do not unreasonably interfere with the work required under this contract. The Contractor shall only remove trees when specifically authorized to do so, and shall avoid damaging vegetation that will remain in place. If any limbs or branches of trees are broken during contract performance, or by the careless operation of equipment, or by workmen, the Contractor shall trim those limbs or branches with a clean cut and paint the cut with a tree-pruning compound as directed by the Contracting Officer.

(b) The Contractor shall protect from damage all existing improvements and utilities

(1) at or near the work site, and

(2) on adjacent property of a third party, the locations of which are made known to or should be known by the Contractor. The Contractor shall repair any damage to those facilities, including those that are the property of a third party, resulting from failure to comply with the requirements of this contract or failure to exercise reasonable care in performing the work. If the Contractor fails or refuses to repair the damage promptly, the Contracting Officer may have the necessary work performed and charge the cost to the Contractor.

52.236-10 OPERATIONS AND STORAGE AREAS (APR 1984)

(a) The Contractor shall confine all operations (including storage of materials) on Government premises to areas authorized or approved by the Contracting Officer. The Contractor shall hold and save the Government, its officers and agents, free and harmless from liability of any nature occasioned by the Contractor's performance.

(b) Temporary buildings (e.g., storage sheds, shops, offices) and utilities may be erected by the Contractor only with the approval of the Contracting Officer and shall be built with labor and materials furnished by the Contractor without expense to the Government. The temporary buildings and utilities shall remain the property of the Contractor and shall be removed by the Contractor at its expense upon completion of the work. With the written consent of the Contracting Officer, the buildings and utilities may be abandoned and need not be removed.

(c) The Contractor shall, under regulations prescribed by the Contracting Officer, use only established roadways, or use temporary roadways constructed by the Contractor when and as authorized by the Contracting Officer. When materials are transported in prosecuting the work, vehicles shall not be loaded beyond the loading capacity recommended by the manufacturer of the vehicle or prescribed by any Federal, State, or local law or regulation. When it is necessary to cross curbs or sidewalks, the Contractor shall protect them from damage. The Contractor shall repair or pay for the repair of any damaged curbs, sidewalks, or roads.

52.236-11 USE AND POSSESSION PRIOR TO COMPLETION (APR 1984)

(a) The Government shall have the right to take possession of or use any completed or partially completed part of the work. Before taking possession of or using any work, the Contracting Officer shall furnish the Contractor a list of items of work remaining to be performed or corrected on those portions of the work that the Government intends to take possession of or use. However, failure of the Contracting Officer to list any item of work shall not relieve the Contractor of responsibility for complying with the terms of the contract. The Government's possession or use shall not be deemed an acceptance of any work under the contract.

(b) While the Government has such possession or use, the Contractor shall be relieved of the responsibility for the loss of or damage to the work resulting from the Government's possession or use, notwithstanding the terms of the clause in this contract entitled "Permits and Responsibilities." If prior possession or use by the Government delays the progress of the work or causes additional expense to the Contractor, an equitable adjustment shall be made in the

contract price or the time of completion, and the contract shall be modified in writing accordingly.

52.236-12 CLEANING UP (APR 1984)

The Contractor shall at all times keep the work area, including storage areas, free from accumulations of waste materials. Before completing the work, the Contractor shall remove from the work and premises any rubbish, tools, scaffolding, equipment, and materials that are not the property of the Government. Upon completing the work, the Contractor shall leave the work area in a clean, neat, and orderly condition satisfactory to the Contracting Officer.

52.236-13 ACCIDENT PREVENTION (NOV 1991)

(a) The Contractor shall provide and maintain work environments and procedures which will

(1) safeguard the public and Government personnel, property, materials, supplies, and equipment exposed to Contractor operations and activities;

(2) avoid interruptions of Government operations and delays in project completion dates; and

(3) control costs in the performance of this contract.

(b) For these purposes on contracts for construction or dismantling, demolition, or removal of improvements, the Contractor shall-

(1) Provide appropriate safety barricades, signs, and signal lights;

(2) Comply with the standards issued by the Secretary of Labor at 29 CFR Part 1926 and 29 CFR Part 1910; and

(3) Ensure that any additional measures the Contracting Officer determines to be reasonably necessary for the purposes are taken.

(c) If this contract is for construction or dismantling, demolition or removal of improvements with any Department of Defense agency or component, the Contractor shall comply with all pertinent provisions of the latest version of U.S. Army Corps of Engineers Safety and Health Requirements Manual, EM 385-1-1, in effect on the date of the solicitation.

(d) Whenever the Contracting Officer becomes aware of any noncompliance with these requirements or any condition which poses a serious or imminent danger to the health or safety of the public or Government personnel, the Contracting Officer shall notify the Contractor orally, with written confirmation, and request immediate initiation of corrective action. This notice, when delivered to the Contractor or the Contractor's representative at the work site, shall be deemed sufficient notice of the noncompliance and that corrective action is required. After receiving the notice, the Contractor shall immediately take corrective action. If the Contractor fails or refuses to promptly take corrective action, the Contracting Officer may issue an order stopping all or part of the work until satisfactory corrective action has been taken. The Contractor shall not be entitled to any equitable adjustment of the contract price or extension of the performance schedule on any stop work order issued under this clause.

(e) The Contractor shall insert this clause, including this paragraph (e), with appropriate changes in the designation of the parties, in subcontracts.

52.236-15 SCHEDULES FOR CONSTRUCTION CONTRACTS (APR 1984)

(a) The Contractor shall, within five days after the work commences on the contract or another period of time determined by the Contracting Officer, prepare and submit to the Contracting Officer for approval three copies of a practicable schedule showing the order in which the Contractor proposes to perform the work, and the dates on

which the Contractor contemplates starting and completing the several salient features of the work (including acquiring materials, plant, and equipment). The schedule shall be in the form of a progress chart of suitable scale to indicate appropriately the percentage of work scheduled for completion by any given date during the period. If the Contractor fails to submit a schedule within the time prescribed, the Contracting Officer may withhold approval of progress payments until the Contractor submits the required schedule.

(b) The Contractor shall enter the actual progress on the chart as directed by the Contracting Officer, and upon doing so shall immediately deliver three copies of the annotated schedule to the Contracting Officer. If, in the opinion of the Contracting Officer, the Contractor falls behind the approved schedule, the Contractor shall take steps necessary to improve its progress, including those that may be required by the Contracting Officer, without additional cost to the Government. In this circumstance, the Contracting Officer may require the Contractor to increase the number of shifts, overtime operations, days of work, and/or the amount of construction plant, and to submit for approval any supplementary schedule or schedules in chart form as the Contracting Officer deems necessary to demonstrate how the approved rate of progress will be regained.

(c) Failure of the Contractor to comply with the requirements of the Contracting Officer under this clause shall be grounds for a determination by the Contracting Officer that the Contractor is not prosecuting the work with sufficient diligence to ensure completion within the time specified in the contract. Upon making this determination, the Contracting Officer may terminate the Contractor's right to proceed with the work, or any separable part of it, in accordance with the default terms of this contract.

52.236-17 LAYOUT OF WORK (APR 1984)

The Contractor shall lay out its work from Government established base lines and bench marks indicated on the drawings, and shall be responsible for all measurements in connection with the layout. The Contractor shall furnish, at its own expense, all stakes, templates, platforms, equipment, tools, materials, and labor required to lay out any part of the work. The Contractor shall be responsible for executing the work to the lines and grades that may be established or indicated by the Contracting Officer. The Contractor shall also be responsible for maintaining and preserving all stakes and other marks established by the Contracting Officer until authorized to remove them. If such marks are destroyed by the Contractor or through its negligence before their removal is authorized, the Contracting Officer may replace them and deduct the expense of the replacement from any amounts due or to become due to the Contractor.

52.236-21 SPECIFICATIONS AND DRAWINGS FOR CONSTRUCTION (FEB 1997)

(a) The Contractor shall keep on the work site a copy of the drawings and specifications and shall at all times give the Contracting Officer access thereto. Anything mentioned in the specifications and not shown on the drawings, or shown on the drawings and not mentioned in the specifications, shall be of like effect as if shown or mentioned in both. In case of difference between drawings and specifications, the specifications shall govern. In case of discrepancy in the figures, in the drawings, or in the specifications, the matter shall be promptly submitted to the Contracting Officer, who shall promptly make a determination in writing. Any adjustment by the Contractor without such a determination shall be at its own risk and expense. The Contracting Officer shall furnish from time to time such detailed drawings and other information as considered necessary, unless otherwise provided.

(b) Wherever in the specifications or upon the drawings the words "directed", "required", "ordered", "designated", "prescribed", or words of like import are used, it shall be understood that the "direction", "requirement", "order", "designation", or "prescription", of the Contracting Officer is intended and similarly the words "approved", "acceptable", "satisfactory", or words of like import shall mean "approved by," or "acceptable to", or "satisfactory to" the Contracting Officer, unless otherwise expressly stated.

(c) Where "as shown," as indicated", "as detailed", or words of similar import are used, it shall be understood that the reference is made to the drawings accompanying this contract unless stated otherwise. The word "provided" as used herein shall be understood to mean "provide complete in place," that is "furnished and installed".

(d) Shop drawings means drawings, submitted to the Government by the Contractor, subcontractor, or any lower tier subcontractor pursuant to a construction contract, showing in detail (1) the proposed fabrication and assembly of structural elements, and (2) the installation (i.e., fit, and attachment details) of materials or equipment. It includes drawings, diagrams, layouts, schematics, descriptive literature, illustrations, schedules, performance and test data, and similar materials furnished by the contractor to explain in detail specific portions of the work required by the contract. The Government may duplicate, use, and disclose in any manner and for any purpose shop drawings delivered under this contract.

(e) If this contract requires shop drawings, the Contractor shall coordinate all such drawings, and review them for accuracy, completeness, and compliance with contract requirements and shall indicate its approval thereon as evidence of such coordination and review. Shop drawings submitted to the Contracting Officer without evidence of the Contractor's approval may be returned for resubmission. The Contracting Officer will indicate an approval or disapproval of the shop drawings and if not approved as submitted shall indicate the Government's reasons therefor. Any work done before such approval shall be at the Contractor's risk. Approval by the Contracting Officer shall not relieve the Contractor from responsibility for any errors or omissions in such drawings, nor from responsibility for complying with the requirements of this contract, except with respect to variations described and approved in accordance with (f) below.

(f) If shop drawings show variations from the contract requirements, the Contractor shall describe such variations in writing, separate from the drawings, at the time of submission. If the Contracting Officer approves any such variation, the Contracting Officer shall issue an appropriate contract modification, except that, if the variation is minor or does not involve a change in price or in time of performance, a modification need not be issued.

(g) The Contractor shall submit to the Contracting Officer for approval four copies (unless otherwise indicated) of all shop drawings as called for under the various headings of these specifications. Three sets (unless otherwise indicated) of all shop drawings, will be retained by the Contracting Officer and one set will be returned to the Contractor.

52.236-26 PRECONSTRUCTION CONFERENCE (FEB 1995)

If the Contracting Officer decides to conduct a preconstruction conference, the successful offeror will be notified and will be required to attend. The Contracting Officer's notification will include specific details regarding the date, time, and location of the conference, any need for attendance by subcontractors, and information regarding the items to be discussed.

52.242-13 Bankruptcy (JUL 1995)

In the event the Contractor enters into proceedings relating to bankruptcy, whether voluntary or involuntary, the Contractor agrees to furnish, by certified mail or electronic commerce method authorized by the contract, written notification of the bankruptcy to the Contracting Officer responsible for administering the contract. This notification shall be furnished within five days of the initiation of the proceedings relating to bankruptcy filing. This notification shall include the date on which the bankruptcy petition was filed, the identity of the court in which the bankruptcy petition was filed, and a listing of Government contract numbers and contracting offices for all Government contracts against which final payment has not been made. This obligation remains in effect until final payment under this contract.

(End of clause)

52.242-14 SUSPENSION OF WORK (APR 1984)

(a) The Contracting Officer may order the Contractor, in writing, to suspend, delay, or interrupt all or any part of the work of this contract for the period of time that the Contracting Officer determines appropriate for the convenience

of the Government.

(b) If the performance of all or any part of the work is, for an unreasonable period of time, suspended, delayed, or interrupted (1) by an act of the Contracting Officer in the administration of this contract, or (2) by the Contracting Officer's failure to act within the time specified in this contract (or within a reasonable time if not specified), an adjustment shall be made for any increase in the cost of performance of this contract (excluding profit) necessarily caused by the unreasonable suspension, delay, or interruption, and the contract modified in writing accordingly. However, no adjustment shall be made under this clause for any suspension, delay, or interruption to the extent that performance would have been so suspended, delayed, or interrupted by any other cause, including the fault or negligence of the Contractor, or for which an equitable adjustment is provided for or excluded under any other term or condition of this contract. (c) A claim under this clause shall not be allowed (1) for any costs incurred more than 20 days before the Contractor shall have notified the Contracting Officer in writing of the act or failure to act involved (but this requirement shall not apply as to a claim resulting from a suspension order), and (2) unless the claim, in an amount stated, is asserted in writing as soon as practicable after the termination of the suspension, delay, or interruption, but not later than the date of final payment under the contract.

52.243-4 CHANGES (AUG 1987)

(a) The Contracting Officer may, at any time, without notice to the sureties, if any, by written order designated or indicated to be a change order, make changes in the work within the general scope of the contract, including changes--

(1) In the specifications (including drawings and designs);

(2) In the method or manner of performance of the work;

(3) In the Government-furnished facilities, equipment, materials, services, or site; or

(4) Directing acceleration in the performance of the work.

(b) Any other written or oral order (which, as used in this paragraph (b), includes direction, instruction, interpretation, or determination) from the Contracting Officer that causes a change shall be treated as a change order under this clause; provided, that the Contractor gives the Contracting Officer written notice stating

(1) the date, circumstances, and source of the order and

(2) that the Contractor regards the order as a change order.

(c) Except as provided in this clause, no order, statement, or conduct of the Contracting Officer shall be treated as a change under this clause or entitle the Contractor to an equitable adjustment.

(d) If any change under this clause causes an increase or decrease in the Contractor's cost of, or the time required for, the performance of any part of the work under this contract, whether or not changed by any such order, the Contracting Officer shall make an equitable adjustment and modify the contract in writing. However, except for an adjustment based on defective specifications, no adjustment for any change under paragraph (b) of this clause shall be made for any costs incurred more than 20 days before the Contractor gives written notice as required. In the case of defective specifications for which the Government is responsible, the equitable adjustment shall include any increased cost reasonably incurred by the Contractor in attempting to comply with the defective specifications.

(e) The Contractor must assert its right to an adjustment under this clause within 30 days after

(1) receipt of a written change order under paragraph (a) of this clause or (2) the furnishing of a written notice under paragraph (b) of this clause, by submitting to the Contracting Officer a written statement describing the general nature and amount of the proposal, unless this period is extended by the Government. The statement of proposal for adjustment may be included in the notice under paragraph (b) above.

(f) No proposal by the Contractor for an equitable adjustment shall be allowed if asserted after final payment under this contract.

52.246-12 INSPECTION OF CONSTRUCTION (AUG 1996)

(a) Definition. "Work" includes, but is not limited to, materials, workmanship, and manufacture and fabrication of components.

(b) The Contractor shall maintain an adequate inspection system and perform such inspections as will ensure that the work performed under the contract conforms to contract requirements. The Contractor shall maintain complete inspection records and make them available to the Government. All work shall be conducted under the general direction of the Contracting Officer and is subject to Government inspection and test at all places and at all reasonable times before acceptance to ensure strict compliance with the terms of the contract.

(c) Government inspections and tests are for the sole benefit of the Government and do not--

(1) Relieve the Contractor of responsibility for providing adequate quality control measures;

(2) Relieve the Contractor of responsibility for damage to or loss of the material before acceptance;

(3) Constitute or imply acceptance; or

(4) Affect the continuing rights of the Government after acceptance of the completed work under paragraph (i) of this section.

(d) The presence or absence of a Government inspector does not relieve the Contractor from any contract requirement, nor is the inspector authorized to change any term or condition of the specification without the Contracting Officer's written authorization.

(e) The Contractor shall promptly furnish, at no increase in contract price, all facilities, labor, and material reasonably needed for performing such safe and convenient inspections and tests as may be required by the Contracting Officer. The Government may charge to the Contractor any additional cost of inspection or test when work is not ready at the time specified by the Contractor for inspection or test, or when prior rejection makes reinspection or retest necessary. The Government shall perform all inspections and tests in a manner that will not unnecessarily delay the work. Special, full size, and performance tests shall be performed as described in the contract.

(f) The Contractor shall, without charge, replace or correct work found by the Government not to conform to contract requirements, unless in the public interest the Government consents to accept the work with an appropriate adjustment in contract price. The Contractor shall promptly segregate and remove rejected material from the premises.

(g) If the Contractor does not promptly replace or correct rejected work, the Government may (1) by contract or otherwise, replace or correct the work and charge the cost to the Contractor or (2) terminate for default the Contractor's right to proceed.

(h) If, before acceptance of the entire work, the Government decides to examine already completed work by removing it or tearing it out, the Contractor, on request, shall promptly furnish all necessary facilities, labor, and material. If the work is found to be defective or nonconforming in any material respect due to the fault of the Contractor or its subcontractors, the Contractor shall defray the expenses of the examination and of satisfactory reconstruction. However, if the work is found to meet contract requirements, the Contracting Officer shall make an equitable adjustment for the additional services involved in the examination and reconstruction, including, if completion of the work was thereby delayed, an extension of time.

(i) Unless otherwise specified in the contract, the Government shall accept, as promptly as practicable after completion and inspection, all work required by the contract or that portion of the work the Contracting Officer determines can be accepted separately. Acceptance shall be final and conclusive except for latent defects, fraud, gross mistakes amounting to fraud, or the Government's rights under any warranty or guarantee.

52.246-21 WARRANTY OF CONSTRUCTION (MAR 1994)

(a) In addition to any other warranties in this contract, the Contractor warrants, except as provided in paragraph (i) of this clause, that work performed under this contract conforms to the contract requirements and is free of any defect in equipment, material, or design furnished, or workmanship performed by the Contractor or any subcontractor or supplier at any tier.

(b) This warranty shall continue for a period of 1 year from the date of final acceptance of the work. If the Government takes possession of any part of the work before final acceptance, this warranty shall continue for a period of 1 year from the date the Government takes possession.

(c) The Contractor shall remedy at the Contractor's expense any failure to conform, or any defect. In addition, the Contractor shall remedy at the Contractor's expense any damage to Government-owned or controlled real or personal property, when that damage is the result of--

(1) The Contractor's failure to conform to contract requirements; or

(2) Any defect of equipment, material, workmanship, or design furnished.

(d) The Contractor shall restore any work damaged in fulfilling the terms and conditions of this clause. The Contractor's warranty with respect to work repaired or replaced will run for 1 year from the date of repair or replacement.

(e) The Contracting Officer shall notify the Contractor, in writing, within a reasonable time after the discovery of any failure, defect, or damage.

(f) If the Contractor fails to remedy any failure, defect, or damage within a reasonable time after receipt of notice, the Government shall have the right to replace, repair, or otherwise remedy the failure, defect, or damage at the Contractor's expense.
(g) With respect to all warranties, express or implied, from subcontractors, manufacturers, or suppliers for work performed and materials furnished under this contract, the Contractor shall--

(1) Obtain all warranties that would be given in normal commercial practice;

(2) Require all warranties to be executed, in writing, for the benefit of the Government, if directed by the Contracting Officer; and

(3) Enforce all warranties for the benefit of the Government, if directed by the Contracting Officer.

(h) In the event the Contractor's warranty under paragraph (b) of this clause has expired, the Government may bring suit at its expense to enforce a subcontractor's, manufacturer's, or supplier's warranty.

(i) Unless a defect is caused by the negligence of the Contractor or subcontractor or supplier at any tier, the Contractor shall not be liable for the repair of any defects of material or design furnished by the Government nor for the repair of any damage that results from any defect in Government-furnished material or design.

(j) This warranty shall not limit the Government's rights under the Inspection and Acceptance clause of this contract with respect to latent defects, gross mistakes, or fraud.

(End of clause)

52.248-3 VALUE ENGINEERING--CONSTRUCTION (FEB 2000)

(a) General. The Contractor is encouraged to develop, prepare, and submit value engineering change proposals (VECP's) voluntarily. The Contractor shall share in any instant contract savings realized from accepted VECP's, in accordance with paragraph (f) below.

(b) Definitions. "Collateral costs," as used in this clause, means agency costs of operation, maintenance, logistic support, or Government-furnished property.

"Collateral savings," as used in this clause, means those measurable net reductions resulting from a VECP in the agency's overall projected collateral costs, exclusive of acquisition savings, whether or not the acquisition cost changes.

"Contractor's development and implementation costs," as used in this clause, means those costs the Contractor incurs on a VECP specifically in developing, testing, preparing, and submitting the VECP, as well as those costs the Contractor incurs to make the contractual changes required by Government acceptance of a VECP.

"Government costs," as used in this clause, means those agency costs that result directly from developing and implementing the VECP, such as any net increases in the cost of testing, operations, maintenance, and logistic support. The term does not include the normal administrative costs of processing the VECP.

"Instant contract savings," as used in this clause, means the estimated reduction in Contractor cost of performance resulting from acceptance of the VECP, minus allowable Contractor's development and implementation costs, including subcontractors' development and implementation costs (see paragraph (h) below).

"Value engineering change proposal (VECP)" means a proposal that--

(1) Requires a change to this, the instant contract, to implement; and

(2) Results in reducing the contract price or estimated cost without impairing essential functions or characteristics; provided, that it does not involve a change--

(i) In deliverable end item quantities only; or

(ii) To the contract type only.

(c) VECP preparation. As a minimum, the Contractor shall include in each VECP the information described in subparagraphs (1) through (7) below. If the proposed change is affected by contractually required configuration management or similar procedures, the instructions in those procedures relating to format, identification, and priority assignment shall govern VECP preparation. The VECP shall include the following:

(1) A description of the difference between the existing contract requirement and that proposed, the comparative advantages and disadvantages of each, a justification when an item's function or characteristics are being altered, and the effect of the change on the end item's performance.

(2) A list and analysis of the contract requirements that must be changed if the VECP is accepted, including any suggested specification revisions.

(3) A separate, detailed cost estimate for

(i) the affected portions of the existing contract requirement and

(ii) the VECP. The cost reduction associated with the VECP shall take into account the Contractor's allowable development and implementation costs, including any amount attributable to subcontracts under paragraph (h) below.

(4) A description and estimate of costs the Government may incur in implementing the VECP, such as test and evaluation and operating and support costs.

(5) A prediction of any effects the proposed change would have on collateral costs to the agency.

(6) A statement of the time by which a contract modification accepting the VECP must be issued in order to achieve the maximum cost reduction, noting any effect on the contract completion time or delivery schedule.

(7) Identification of any previous submissions of the VECP, including the dates submitted, the agencies and contract numbers involved, and previous Government actions, if known.

(d) Submission. The Contractor shall submit VECP's to the Resident Engineer at the worksite, with a copy to the Contracting Officer.

(e) Government action.

(1) The Contracting Officer will notify the Contractor of the status of the VECP within 45 calendar days after the contracting office receives it. If additional time is required, the Contracting Officer will notify the Contractor within the 45-day period and provide the reason for the delay and the expected date of the decision. The Government will process VECP's expeditiously; however, it shall not be liable for any delay in acting upon a VECP.

If the VECP is not accepted, the Contracting Officer will notify the Contractor in writing, explaining the reasons for rejection. The Contractor may withdraw any VECP, in whole or in part, at any time before it is accepted by the Government. The Contracting Officer may require that the Contractor provide written notification before undertaking significant expenditures for VECP effort.

Any VECP may be accepted, in whole or in part, by the Contracting Officer's award of a modification to this contract citing this clause. The Contracting Officer may accept the VECP, even though an agreement on price reduction has not been reached, by issuing the Contractor a notice to proceed with the change. Until a notice to proceed is issued or a contract modification applies a VECP to this contract, the Contractor shall perform in accordance with the existing contract. The decision to accept or reject all or part of any VECP is a unilateral decision made solely at the discretion of the Contracting Officer.

(f) Sharing.

(1) Rates. The Government's share of savings is determined by subtracting Government costs from instant contract savings and multiplying the result by

(i) 45 percent for fixed-price contracts or

(ii) 75 percent for cost-reimbursement contracts.

(2) Payment. Payment of any share due the Contractor for use of a VECP on this contract shall be authorized by a modification to this contract to--

(i) Accept the VECP;

(ii) Reduce the contract price or estimated cost by the amount of instant contract savings; and

(iii) Provide the Contractor's share of savings by adding the amount calculated to the contract price or fee.

(g) Collateral savings. If a VECP is accepted, the Contracting Officer will increase the instant contract amount by 20 percent of any projected collateral savings determined to be realized in a typical year of use after subtracting any Government costs not previously offset. However, the Contractor's share of collateral savings will not exceed the

contract's firm-fixed-price or estimated cost, at the time the VECP is accepted, or $100,000, whichever is greater. The Contracting Officer is the sole determiner of the amount of collateral savings.

(h) Subcontracts. The Contractor shall include an appropriate value engineering clause in any subcontract of $50,000 or more and may include one in subcontracts of lesser value. In computing any adjustment in this contract's price under paragraph (f) above, the Contractor's allowable development and implementation costs shall include any subcontractor's allowable development and implementation costs clearly resulting from a VECP accepted by the Government under this contract, but shall exclude any value engineering incentive payments to a subcontractor. The Contractor may choose any arrangement for subcontractor value engineering incentive payments; provided, that these payments shall not reduce the Government's share of the savings resulting from the VECP.

(i) Data. The Contractor may restrict the Government's right to use any part of a VECP or the supporting data by marking the following legend on the affected parts:

"These data, furnished under the Value Engineering-- Construction clause of contract . . . . . , shall not be disclosed outside the Government or duplicated, used, or disclosed, in whole or in part, for any purpose other than to evaluate a value engineering change proposal submitted under the clause. This restriction does not limit the Government's right to use information contained in these data if it has been obtained or is otherwise available from the Contractor or from another source without limitations." If a VECP is accepted, the Contractor hereby grants the Government unlimited rights in the VECP and supporting data, except that, with respect to data qualifying and submitted as limited rights technical data, the Government shall have the rights specified in the contract modification implementing the VECP and shall appropriately mark the data. (The terms "unlimited rights" and "limited rights" are defined in Part 27 of the Federal Acquisition Regulation.)

(End of clause)

52.249-2 TERMINATION FOR CONVENIENCE OF THE GOVERNMENT (FIXED-PRICE) (SEP 1996)

(a) The Government may terminate performance of work under this contract in whole or, from time to time, in part if the Contracting Officer determines that a termination is in the Government's interest. The Contracting Officer shall terminate by delivering to the Contractor a Notice of Termination specifying the extent of termination and the effective date.

(b) After receipt of a Notice of Termination, and except as directed by the Contracting Officer, the Contractor shall immediately proceed with the following obligations, regardless of any delay in determining or adjusting any amounts due under this clause:

(1) Stop work as specified in the notice.

(2) Place no further subcontracts or orders (referred to as subcontracts in this clause) for materials, services, or facilities, except as necessary to complete the continued portion of the contract.

(3) Terminate all subcontracts to the extent they relate to the work terminated.

(4) Assign to the Government, as directed by the Contracting Officer, all right, title, and interest of the Contractor under the subcontracts terminated, in which case the Government shall have the right to settle or to pay any termination settlement proposal arising out of those terminations.

(5) With approval or ratification to the extent required by the Contracting Officer, settle all outstanding liabilities and termination settlement proposals arising from the termination of subcontracts; the approval or ratification will be final for purposes of this clause.

(6) As directed by the Contracting Officer, transfer title and deliver to the Government (i) the fabricated or unfabricated parts, work in process, completed work, supplies, and other material produced or acquired for the work

terminated, and (ii) the completed or partially completed plans, drawings, information, and other property that, if the contract had been completed, would be required to be furnished to the Government.

(7) Complete performance of the work not terminated.

(8) Take any action that may be necessary, or that the Contracting Officer may direct, for the protection and preservation of the property related to this contract that is in the possession of the Contractor and in which the Government has or may acquire an interest.

(9) Use its best efforts to sell, as directed or authorized by the Contracting Officer, any property of the types referred to in subparagraph (b)(6) of this clause; provided, however, that the Contractor (i) is not required to extend credit to any purchaser and (ii) may acquire the property under the conditions prescribed by, and at prices approved by, the Contracting Officer. The proceeds of any transfer or disposition will be applied to reduce any payments to be made by the Government under this contract, credited to the price or cost of the work, or paid in any other manner directed by the Contracting Officer.

(c) The Contractor shall submit complete termination inventory schedules no later than 120 days from the effective date of termination, unless extended in writing by the Contracting Officer upon written request of the Contractor within this 120-day period.

(d) After expiration of the plant clearance period as defined in Subpart 45.6 of the Federal Acquisition Regulation, the Contractor may submit to the Contracting Officer a list, certified as to quantity and quality, of termination inventory not previously disposed of, excluding items authorized for disposition by the Contracting Officer. The Contractor may request the Government to remove those items or enter into an agreement for their storage. Within 15 days, the Government will accept title to those items and remove them or enter into a storage agreement. The Contracting Officer may verify the list upon removal of the items, or if stored, within 45 days from submission of the list, and shall correct the list, as necessary, before final settlement.

(e) After termination, the Contractor shall submit a final termination settlement proposal to the Contracting Officer in the form and with the certification prescribed by the Contracting Officer. The Contractor shall submit the proposal promptly, but no later than 1 year from the effective date of termination, unless extended in writing by the Contracting Officer upon written request of the Contractor within this 1-year period. However, if the Contracting Officer determines that the facts justify it, a termination settlement proposal may be received and acted on after 1 year or any extension. If the Contractor fails to submit the proposal within the time allowed, the Contracting Officer may determine, on the basis of information available, the amount, if any, due the Contractor because of the termination and shall pay the amount determined.

(f) Subject to paragraph (e) of this clause, the Contractor and the Contracting Officer may agree upon the whole or any part of the amount to be paid or remaining to be paid because of the termination. The amount may include a reasonable allowance for profit on work done. However, the agreed amount, whether under this paragraph (g) or paragraph (g) of this clause, exclusive of costs shown in subparagraph (g)(3) of this clause, may not exceed the total contract price as reduced by (1) the amount of payments previously made and (2) the contract price of work not terminated. The contract shall be modified, and the Contractor paid the agreed amount. Paragraph (g) of this clause shall not limit, restrict, or affect the amount that may be agreed upon to be paid under this paragraph.

(g) If the Contractor and the Contracting Officer fail to agree on the whole amount to be paid because of the termination of work, the Contracting Officer shall pay the Contractor the amounts determined by the Contracting Officer as follows, but without duplication of any amounts agreed on under paragraph (f) of this clause:

(1) The contract price for completed supplies or services accepted by the Government (or sold or acquired under subparagraph (b)(9) of this clause) not previously paid for, adjusted for any saving of freight and other charges.

(2) The total of--

(i) The costs incurred in the performance of the work terminated, including initial costs and preparatory expense allocable thereto, but excluding any costs attributable to supplies or services paid or to be paid under subparagraph (f)(1) of this clause;

(ii) The cost of settling and paying termination settlement proposals under terminated subcontracts that are properly chargeable to the terminated portion of the contract if not included in subdivision (g)(2)(i) of this clause; and

(iii) A sum, as profit on subdivision (g)(2)(i) of this clause, determined by the Contracting Officer under 49.202 of the Federal Acquisition Regulation, in effect on the date of this contract, to be fair and reasonable; however, if it appears that the Contractor would have sustained a loss on the entire contract had it been completed, the Contracting Officer shall allow no profit under this subdivision (iii) and shall reduce the settlement to reflect the indicated rate of loss.

(3) The reasonable costs of settlement of the work terminated, including--

(i) Accounting, legal, clerical, and other expenses reasonably necessary for the preparation of termination settlement proposals and supporting data;

(ii) The termination and settlement of subcontracts (excluding the amounts of such settlements); and

(iii) Storage, transportation, and other costs incurred, reasonably necessary for the preservation, protection, or disposition of the termination inventory.

(h) Except for normal spoilage, and except to the extent that the Government expressly assumed the risk of loss, the Contracting Officer shall exclude from the amounts payable to the Contractor under paragraph (g) of this clause, the fair value, as determined by the Contracting Officer, of property that is destroyed, lost, stolen, or damaged so as to become undeliverable to the Government or to a buyer.

(i) The cost principles and procedures of Part 31 of the Federal Acquisition Regulation, in effect on the date of this contract, shall govern all costs claimed, agreed to, or determined under this clause.

(j) The Contractor shall have the right of appeal, under the Disputes clause, from any determination made by the Contracting Officer under paragraph (e), (g), or (l) of this clause, except that if the Contractor failed to submit the termination settlement proposal or request for equitable adjustment within the time provided in paragraph (e) or (l), respectively, and failed to request a time extension, there is no right of appeal.

(k) In arriving at the amount due the Contractor under this clause, there shall be deducted--

(1) All unliquidated advance or other payments to the Contractor under the terminated portion of this contract;

(2) Any claim which the Government has against the Contractor under this contract; and

(3) The agreed price for, or the proceeds of sale of, materials, supplies, or other things acquired by the Contractor or sold under the provisions of this clause and not recovered by or credited to the Government.

(l) If the termination is partial, the Contractor may file a proposal with the Contracting Officer for an equitable adjustment of the price(s) of the continued portion of the contract. The Contracting Officer shall make any equitable adjustment agreed upon. Any proposal by the Contractor for an equitable adjustment under this clause shall be requested within 90 days from the effective date of termination unless extended in writing by the Contracting Officer.

(m)(1) The Government may, under the terms and conditions it prescribes, make partial payments and payments against costs incurred by the Contractor for the terminated portion of the contract, if the Contracting Officer believes the total of these payments will not exceed the amount to which the Contractor will be entitled.

(2) If the total payments exceed the amount finally determined to be due, the Contractor shall repay the excess to the Government upon demand, together with interest computed at the rate established by the Secretary of the Treasury under 50 U.S.C. App. 1215(b)(2). Interest shall be computed for the period from the date the excess payment is received by the Contractor to the date the excess is repaid. Interest shall not be charged on any excess payment due to a reduction in the Contractor's termination settlement proposal because of retention or other disposition of termination inventory until 10 days after the date of the retention or disposition, or a later date determined by the Contracting Officer because of the circumstances.

(n) Unless otherwise provided in this contract or by statute, the Contractor shall maintain all records and documents relating to the terminated portion of this contract for 3 years after final settlement. This includes all books and other evidence bearing on the Contractor's costs and expenses under this contract. The Contractor shall make these records and documents available to the Government, at the Contractor's office, at all reasonable times, without any direct charge. If approved by the Contracting Officer, photographs, microphotographs, or other authentic reproductions may be maintained instead of original records and documents.

52.249-10 DEFAULT (FIXED-PRICE CONSTRUCTION) (APR 1984)

(a) If the Contractor refuses or fails to prosecute the work or any separable part, with the diligence that will insure its completion within the time specified in this contract including any extension, or fails to complete the work within this time, the Government may, by written notice to the Contractor, terminate the right to proceed with the work (or the separable part of the work) that has been delayed. In this event, the Government may take over the work and complete it by contract or otherwise, and may take possession of and use any materials, appliances, and plant on the work site necessary for completing the work. The Contractor and its sureties shall be liable for any damage to the Government resulting from the Contractor's refusal or failure to complete the work within the specified time, whether or not the Contractor's right to proceed with the work is terminated. This liability includes any increased costs incurred by the Government in completing the work.

(b) The Contractor's right to proceed shall not be terminated nor the Contractor charged with damages under this clause, if--

(1) The delay in completing the work arises from unforeseeable causes beyond the control and without the fault or negligence of the Contractor. Examples of such causes include

(i) acts of God or of the public enemy,

(ii) acts of the Government in either its sovereign or contractual capacity,

(iii) acts of another Contractor in the performance of a contract with the Government,

(iv) fires,

(v) floods,

(vi) epidemics,

(vii) quarantine restrictions,

(viii) strikes,

(ix) freight embargoes,

(x) unusually severe weather, or delays of subcontractors or suppliers at any tier arising from unforeseeable causes beyond the control and without the fault or negligence of both the Contractor and the subcontractors or suppliers; and

(2) The Contractor, within 10 days from the beginning of any delay (unless extended by the Contracting Officer), notifies the Contracting Officer in writing of the causes of delay. The Contracting Officer shall ascertain the facts and the extent of delay. If, in the judgment of the Contracting Officer, the findings of fact warrant such action, the time for completing the work shall be extended. The findings of the Contracting Officer shall be final and conclusive on the parties, but subject to appeal under the Disputes clause.

(c) If, after termination of the Contractor's right to proceed, it is determined that the Contractor was not in default, or that the delay was excusable, the rights and obligations of the parties will be the same as if the termination had been issued for the convenience of the Government.

The rights and remedies of the Government in this clause are in addition to any other rights and remedies provided by law or under this contract.

52.252-2 CLAUSES INCORPORATED BY REFERENCE (FEB 1998)

This contract incorporates one or more clauses by reference, with the same force and effect as if they were given in full text. Upon request, the Contracting Officer will make their full text available. Also, the full text of a clause may be accessed electronically at this/these address(es):

http://www.arnet.gov.far
http://farsite.hill.af.mil
http://www.dtic.mil//dfars

52.252-4 ALTERATIONS IN CONTRACT (APR 1984)

Portions of this contract are altered as follows:

(End of clause)

52.252-6 AUTHORIZED DEVIATIONS IN CLAUSES (APR 1984)

(a) The use in this solicitation or contract of any Federal Acquisition Regulation (48 CFR Chapter 1) clause with an authorized deviation is indicated by the addition of "(DEVIATION)" after the date of the clause.

(b) The use in this solicitation or contract of any _____ (48 CFR _____) clause with an authorized deviation is indicated by the addition of "(DEVIATION)" after the name of the regulation.

52.253-1 COMPUTER GENERATED FORMS (JAN 1991)

(a) Any data required to be submitted on a Standard or Optional Form prescribed by the Federal Acquisition Regulation (FAR) may be submitted on a computer generated version of the form, provided there is no change to the name, content, or sequence of the data elements on the form, and provided the form carries the Standard or Optional Form number and edition date.

(b) Unless prohibited by agency regulations, any data required to be submitted on an agency unique form prescribed by an agency supplement to the FAR may be submitted on a computer generated version of the form provided there is no change to the name, content, or sequence of the data elements on the form and provided the form carries the agency form number and edition date.

(c) If the Contractor submits a computer generated version of a form that is different than the required form, then the rights and obligations of the parties will be determined based on the content of the required form.

252.201-7000 CONTRACTING OFFICER'S REPRESENTATIVE (DEC 1991)

(a) "Definition. Contracting officer's representative" means an individual designated in accordance with subsection 201.602-2 of the Defense Federal Acquisition Regulation Supplement and authorized in writing by the contracting officer to perform specific technical or administrative functions.

(b) If the Contracting Officer designates a contracting officer's representative (COR), the Contractor will receive a copy of the written designation. It will specify the extent of the COR's authority to act on behalf of the contracting officer. The COR is not authorized to make any commitments or changes that will affect price, quality, quantity, delivery, or any other term or condition of the contract.

(End of clause)

252.203-7001 PROHIBITION ON PERSONS CONVICTED OF FRAUD OR OTHER DEFENSE-CONTRACT-RELATED FELONIES (MAR 1999)

(a) Definitions. As used in this clause—

(1) "Arising out of a contract with the DoD" means any act in connection with—

(i) Attempting to obtain;

(ii) Obtaining, or

(iii) Performing a contract or first-tier subcontract of any agency, department, or component of the Department of Defense (DoD).

(2) "Conviction of fraud or any other felony" means any conviction for fraud or a felony in violation of state or Federal criminal statutes, whether entered on a verdict or plea, including a plea of *nolo contendere*, for which sentence has been imposed.

(3) "Date of conviction" means the date judgment was entered against the individual.

(b) Any individual who is convicted after September 29, 1988, of fraud or any other felony arising out of a contract with the DoD is prohibited from serving--

(1) In a management or supervisory capacity on any DoD contract or first-tier subcontract;

(2) On the board of directors of any DoD contractor or first-tier subcontractor;

(3) As a consultant, agent, or representative for any DoD contractor or first-tier subcontractor; or

(4) In any other capacity with the authority to influence, advise, or control the decisions of any DoD contractor or subcontractor with regard to any DoD contract or first-tier subcontract.

(c) Unless waived, the prohibition in paragraph (b) of this clause applies for not less than 5 years from the date of conviction.

(d) 10 U.S.C. 2408 provides that a defense contractor or first-tier subcontractor shall be subject to a criminal penalty of not more than $500,000 if convicted of knowingly—

(1) Employing a person under a prohibition specified in paragraph (b) of this clause; or

(2) Allowing such a person to serve on the board of directors of the contractor or first-tier subcontractor.

(e) In addition to the criminal penalties contained in 10 U.S.C. 2408, the Government may consider other available remedies, such as—

(1) Suspension or debarment;

(2) Cancellation of the contract at no cost to the Government; or

(3) Termination of the contract for default.

(f) The Contractor may submit written requests for waiver of the prohibition in paragraph (b) of this clause to the Contracting Officer. Requests shall clearly identify—

(1) The person involved;

(2) The nature of the conviction and resultant sentence or punishment imposed;

(3) The reasons for the requested waiver; and

(4) An explanation of why a waiver is in the interest of national security.

(g) The Contractor agrees to include the substance of this clause, appropriately modified to reflect the identity and relationship of the parties, in all first-tier subcontracts exceeding the simplified acquisition threshold in Part 2 of the Federal Acquisition Regulation, except those for commercial items or components.

(h) Pursuant to 10 U.S.C. 2408(c), defense contractors and subcontractors may obtain information as to whether a particular person has been convicted of fraud or any other felony arising out of a contract with the DoD by contacting The Office of Justice Programs, The Denial of Federal Benefits Office, U.S. Department of Justice, telephone (202) 616-3507.

(End of clause)

252.203-7002 DISPLAY OF DOD HOTLINE POSTER (DEC 1991)

(a) The Contractor shall display prominently in common work areas within business segments performing work under Department of Defense (DoD) contracts, DoD Hotline Posters prepared by the DoD Office of the Inspector General.

(b) DoD Hotline Posters may be obtained from the DoD Inspector General, ATTN: Defense Hotline, 400 Army Navy Drive, Washington, DC 22202-2884.

(c) The Contractor need not comply with paragraph (a) of this clause if it has established a mechanism, such as a hotline, by which employees may report suspected instances of improper conduct, and instructions that encourage employees to make such reports.

(End of clause)

252.204-7000 DISCLOSURE OF INFORMATION (DEC 1991)

(a) The Contractor shall not release to anyone outside the Contractor's organization any unclassified information, regardless of medium (e.g., film, tape, document), pertaining to any part of this contract or any program related to this contract, unless--

(1) The Contracting Officer has given prior written approval; or

(2) The information is otherwise in the public domain before the date of release.

(b) Requests for approval shall identify the specific information to be released, the medium to be used, and the purpose for the release. The Contractor shall submit its request to the Contracting Officer at least 45 days before the proposed date for release.

(c) The Contractor agrees to include a similar requirement in each subcontract under this contract. Subcontractors shall submit requests for authorization to release through the prime contractor to the Contracting Officer.

(End of clause)

252.205-7000 PROVISION OF INFORMATION TO COOPERATIVE AGREEMENT HOLDERS (DEC 1991)

(a) Definition.

"Cooperative agreement holder" means a State or local government; a private, nonprofit organization; a tribal organization (as defined in section 4(c) of the Indian Self-Determination and Education Assistance Act (Pub. L. 93-268; 25 U.S.C. 450 (c))); or an economic enterprise (as defined in section 3(e) of the Indian Financing Act of 1974 (Pub. L. 93-362; 25 U.S.C. 1452(e))) whether such economic enterprise is organized for profit or nonprofit purposes; which has an agreement with the Defense Logistics Agency to furnish procurement technical assistance to business entities.

(b) The Contractor shall provide cooperative agreement holders, upon their request, with a list of those appropriate employees or offices responsible for entering into subcontracts under defense contracts. The list shall include the business address, telephone number, and area of responsibility of each employee or office.

(c) The Contractor need not provide the listing to a particular cooperative agreement holder more frequently than once a year.

(End of clause)

252.209-7000 ACQUISITION FROM SUBCONTRACTORS SUBJECT TO ONSITE INSPECTION UNDER THE INTERMEDIATE-RANGE NUCLEAR FORCES (INF) TREATY (NOV 1995)

(a) The Contractor shall not deny consideration for a subcontract award under this contract to a potential subcontractor subject to on-site inspection under the INF Treaty, or a similar treaty, solely or in part because of the actual or potential presence of Soviet inspectors at the subcontractor's facility, unless the decision is approved by the Contracting Officer.

(b) The Contractor shall incorporate this clause, including this paragraph (b), in all solicitations and contracts exceeding the simplified acquisition threshold in part 13 of the Federal Acquisition Regulation, except those for commercial items.

252.219-7009 SECTION 8(A) DIRECT AWARD (JUN 1998)

(a) This contract is issued as a direct award between the contracting office and the 8(a) Contractor pursuant to the Memorandum of Understanding dated May 6, 1998, between the Small Business Administration (SBA) and the

Department of Defense. Accordingly, the SBA is not a party to this contract. SBA does retain responsibility for 8(a) certification, for 8(a) eligibility determinations and related issues, and for providing counseling and assistance to the 8(a) Contractor under the 8(a) Program. The cognizant SBA district office is:

[To be completed by the Contracting Officer at the time of award]

(b) The contracting office is responsible for administering the contract and for taking any action on behalf of the Government under the terms and conditions of the contract; provided that the contracting office shall give advance notice to the SBA before it issues a final notice terminating performance, either in whole or in part, under the contract. The contracting office also shall coordinate with the SBA prior to processing any novation agreement. The contracting office may assign contract administration functions to a contract administration office.

(c) The Contractor agrees that--

(1) It will notify the Contracting Officer, simultaneous with its notification to the SBA (as required by SBA's 8(a) regulations at 13 CFR 124.308), when the owner or owners upon whom 8(a) eligibility is based plan to relinquish ownership or control of the concern. Consistent with Section 407 of Pub. L. 100-656, transfer of ownership or control shall result in termination of the contract for convenience, unless the SBA waives the requirement for termination prior to the actual relinquishing of ownership and control; and

(2) It will not subcontract the performance of any of the requirements of this contract without the prior written approval of the SBA and the Contracting Officer.

(End of Clause)

252.223-7004 DRUG-FREE WORK FORCE (SEP 1988)

(a) Definitions.

(1) "Employee in a sensitive position," as used in this clause, means an employee who has been granted access to classified information; or employees in other positions that the Contractor determines involve national security; health or safety, or functions other than the foregoing requiring a high degree of trust and confidence.

(2) "Illegal drugs," as used in this clause, means controlled substances included in Schedules I and II, as defined by section 802(6) of title 21 of the United States Code, the possession of which is unlawful under chapter 13 of that Title. The term "illegal drugs" does not mean the use of a controlled substance pursuant to a valid prescription or other uses authorized by law.

(b) The Contractor agrees to institute and maintain a program for achieving the objective of a drug-free work force. While this clause defines criteria for such a program, contractors are encouraged to implement alternative approaches comparable to the criteria in paragraph (c) that are designed to achieve the objectives of this clause.

(c) Contractor programs shall include the following, or appropriate alternatives:

(1) Employee assistance programs emphasizing high level direction, education, counseling, rehabilitation, and coordination with available community resources;

(2) Supervisory training to assist in identifying and addressing illegal drug use by Contractor employees;

(3) Provision for self-referrals as well as supervisory referrals to treatment with maximum respect for individual confidentiality consistent with safety and security issues;

(4) Provision for identifying illegal drug users, including testing on a controlled and carefully monitored basis. Employee drug testing programs shall be established taking account of the following:

(i) The Contractor shall establish a program that provides for testing for the use of illegal drugs by employees in sensitive positions. The extent of and criteria for such testing shall be determined by the Contractor based on considerations that include the nature of the work being performed under the contract, the employee's duties, and efficient use of Contractor resources, and the risks to health, safety, or national security that could result from the failure of an employee adequately to discharge his or her position.

(ii) In addition, the Contractor may establish a program for employee drug testing--

(A) When there is a reasonable suspicion that an employee uses illegal drugs; or

(B) When an employees has been involved in an accident or unsafe practice;

(C) As part of or as a follow-up to counseling or rehabilitation for illegal drug use;

(D) As part of a voluntary employee drug testing program.

(iii) The Contractor may establish a program to test applicants for employment for illegal drug use.

(iv) For the purpose of administering this clause, testing for illegal drugs may be limited to those substances for which testing is prescribed by section 2..1 of subpart B of the "Mandatory Guidelines for Federal Workplace Drug Testing Programs" (53 FR 11980 (April 11, 1988), issued by the Department of Health and Human Services.

(d) Contractors shall adopt appropriate personnel procedures to deal with employees who are found to be using drugs illegally. Contractors shall not allow any employee to remain on duty or perform in a sensitive position who is found to use illegal drugs until such times as the Contractor, in accordance with procedures established by the Contractor, determines that the employee may perform in such a position.

(e) The provisions of this clause pertaining to drug testing program shall not apply to the extent that are inconsistent with state or local law, or with an existing collective bargaining agreement; provided that with respect to the latter, the Contractor agrees those issues that are in conflict will be a subject of negotiation at the next collective bargaining session.

(End of clause)

252.225-7012 Preference for Certain Domestic Commodities (AUG 2000)

(a) The Contractor agrees to deliver under this contract only such of the following articles that have been grown, reprocessed, reused, or produced in the United States, its possessions, or Puerto Rico --

(1) Food;

(2) Clothing;

(3) Tents, tarpaulins, or covers;

(4) Cotton and other natural fiber products;

(5) Woven silk or woven silk blends;

(6) Spun silk yarn for cartridge cloth;

(7) Synthetic fabric, and coated synthetic fabric, including all textile fibers and yarns that are for use in such fabrics;

(8) Canvas products;

(9) Wool (whether in the form of fiber or yarn or contained in fabrics, materials, or manufactured articles); or

(10) Any item of individual equipment (Federal supply Classification 8465) manufactured from or containing such fibers, yarns, fabrics, or materials.

(b) This clause does not apply --

(1) To supplies listed in FAR section 25.104(a), or other supplies for which the Government has determined that a satisfactory quality and sufficient quantity cannot be acquired as and when needed at U.S. market prices;

(2) To foods which have been manufactured or processed in the United States, its possessions, or Puerto Rico;

(3) To chemical warfare protective clothing produced in the countries listed in subsection 225.872-1 of the Defense FAR Supplement; or

(4) To fibers and yarns that are for use in synthetic fabric or coated synthetic fabric (but does apply to the synthetic or coated synthetic fabric itself), if--

(i) The fabric is to be used as a component of an end item that is not a textile product. Examples of textile products, made in whole or in part of fabric, include--

(a) Draperies, floor coverings, furnishings, and bedding (Federal Supply Group 72, Household and Commercial Furnishings and Appliances);

(B) Items made in whole or in part of fabric in Federal Supply Group 83, Textile/leather/furs/apparel/ findings/tents/flags, or Federal Supply Group 84, Clothing, Individual Equipment and Insignia;

(C) Upholstered seats (whether for household, office, or other use); and

(D) Parachutes (Federal Supply Class 1670); or

(ii) The fibers and yarns are para-aramid fibers and yarns manufactured in the Netherlands.

(End of clause)

252.225-7031 SECONDARY ARAB BOYCOTT OF ISRAEL (JUN 1992)

(a) Definitions. As used in this clause--

(1) "Foreign person" means any person other than a United States person as defined in Section 16(2) of the Export Administration Act of 1979 (50 U.S.C. App. Sec 2415).

(2) "United States person" is defined in Section 16(2) of the Export Administration Act of 1979 and means any United States resident or national (other than an individual resident outside the United States and employed by other than a United States person), any domestic concern (including any permanent domestic establishment of any foreign concern), and any foreign subsidiary or affiliate (including any permanent foreign establishment) of any domestic concern which is controlled in fact by such domestic concerns, as determined under regulations of the President.

(b) Certification. By submitting this offer, the Offeror, if a foreign person, company or entity, certifies that it--

(1) Does not comply with the Secondary Arab Boycott of Israel; and

(2) Is not taking or knowingly agreeing to take any action, with respect to the Secondary Boycott of Israel by Arab countries, which 50 U.S.C. App. Sec 2407(a) prohibits a United States person from taking.

(End of clause)

252.227-7000 Non-estoppel. (OCT 1966)

The Government reserves the right at any time to contest the enforceability, validity, scope of, or the title to any patent or patent application herein licensed without waiving or forfeiting any right under this contract.

252.227-7022 GOVERNMENT RIGHTS (UNLIMITED) (MAR 1979)

The Government shall have unlimited rights, in all drawings, designs, specifications, notes and other works developed in the performance of this contract, including the right to use same on any other Government design or construction without additional compensation to the Contractor. The Contractor hereby grants to the Government a paid-up license throughout the world to all such works to which he may assert or establish any claim under design patent or copyright laws. The Contractor for a period of three (3) years after completion of the project agrees to furnish the original or copies of all such works on the request of the Contracting Officer.

252.227-7023 DRAWINGS AND OTHER DATA TO BECOME PROPERTY OF GOVERNMENT. (MAR 1979)

All designs, drawings, specifications, notes and other works developed in the performance of this contract shall become the sole property of the Government and may be used on any other design or construction without additional compensation to the Contractor. The Government shall be considered the "person for whom the work was prepared" for the purpose of authorship in any copyrightable work under 17 U.S.C. 201(b). With respect thereto, the Contractor agrees not to assert or authorize others to assert any rights nor establish any claim under the design patent or copyright laws. The Contractor for a period of three (3) years after completion of the project agrees to furnish all retained works on the request of the Contracting Officer. Unless otherwise provided in this contract, the Contractor shall have the right to retain copies of all works beyond such period.

252.227-7033 RIGHTS IN SHOP DRAWINGS (APR 1966)

(a) Shop drawings for construction means drawings, submitted to the Government by the Construction Contractor, subcontractor or any lower-tier subcontractor pursuant to a construction contract, showing in detail (i) the proposed fabrication and assembly of structural elements and (ii) the installation (i.e., form, fit, and attachment details) of materials or equipment. The Government may duplicate, use, and disclose in any manner and for any purpose shop drawings delivered under this contract.

(b) This clause, including this paragraph (b), shall be included in all subcontracts hereunder at any tier.

252.231-7000 SUPPLEMENTAL COST PRINCIPLES (DEC 1991)

When the allowability of costs under this contract is determined in accordance with part 31 of the Federal Acquisition Regulation (FAR), allowability shall also be determined in accordance with part 231 of the Defense FAR Supplement, in effect on the date of this contract.

252.236-7000 MODIFICATION PROPOSALS - PRICE BREAKDOWN. (DEC 1991)

(a) The Contractor shall furnish a price breakdown, itemized as required and within the time specified by the Contracting Officer, with any proposal for a contract modification.

(b) The price breakdown --

(1) Must include sufficient detail to permit an analysis of profit, and of all costs for --

(i) Material;

(ii) Labor;

(iii) Equipment;

(iv) Subcontracts; and

(v) Overhead; and

(2) Must cover all work involved in the modification, whether the work was deleted, added, or changed.

(c) The Contractor shall provide similar price breakdowns to support any amounts claimed for subcontracts.

(d) The Contractor's proposal shall include a justification for any time extension proposed.

252.236-7008 CONTRACT PRICES - BIDDING SCHEDULES. (DEC 1991)

(a) The Government's payment for the items listed in the Bidding Schedule shall constitute full compensation to the Contractor for --

(1) Furnishing all plant, labor, equipment, appliances, and materials; and

(2) Performing all operations required to complete the work in conformity with the drawings and specifications.

(b) The Contractor shall include in the prices for the items listed in the Bidding Schedule all costs for work in the specifications, whether or not specifically listed in the Bidding Schedule.

252.242-7000 POSTAWARD CONFERENCE (DEC 1991)

The Contractor agrees to attend any postaward conference convened by the contracting activity or contract administration office in accordance with Federal Acquisition Regulation subpart 42.5.

(End of clause)

252.243-7001 PRICING OF CONTRACT MODIFICATIONS (DEC 1991)

When costs are a factor in any price adjustment under this contract, the contract cost principles and procedures in FAR part 31 and DFARS part 231, in effect on the date of this contract, apply.

252.243-7002 REQUESTS FOR EQUITABLE ADJUSTMENT (MAR 1998)

(a) The amount of any request for equitable adjustment to contract terms shall accurately reflect the contract adjustment for which the Contractor believes the Government is liable. The request shall include only costs for performing the change, and shall not include any costs that already have been reimbursed or that have been separately claimed. All indirect costs included in the request shall be properly allocable to the change in accordance with applicable acquisition regulations.

(b) In accordance with 10 U.S.C. 2410(a), any request for equitable adjustment to contract terms that exceeds the simplified acquisition threshold shall bear, at the time of submission, the following certificate executed by an individual authorized to certify the request on behalf of the Contractor:

I certify that the request is made in good faith, and that the supporting data are accurate and complete to the best of my knowledge and belief.

(Official's Name)

(Title)

(c) The certification in paragraph (b) of this clause requires full disclosure of all relevant facts, including--

(1) Cost or pricing data if required in accordance with subsection 15.403-4 of the Federal Acquisition Regulation (FAR); and

(2) Information other than cost or pricing data, in accordance with subsection 15.403-3 of the FAR, including actual cost data and data to support any estimated costs, even if cost or pricing data are not required.

(d) The certification requirement in paragraph (b) of this clause does not apply to----

(1) Requests for routine contract payments; for example, requests for payment for accepted supplies and services, routine vouchers under a cost-reimbursement type contract, or progress payment invoices; or

(2) Final adjustment under an incentive provision of the contract.

252.243-7002 REQUESTS FOR EQUITABLE ADJUSTMENT (MAR 1998)

(a) The amount of any request for equitable adjustment to contract terms shall accurately reflect the contract adjustment for which the Contractor believes the Government is liable. The request shall include only costs for performing the change, and shall not include any costs that already have been reimbursed or that have been separately claimed. All indirect costs included in the request shall be properly allocable to the change in accordance with applicable acquisition regulations.

(b) In accordance with 10 U.S.C. 2410(a), any request for equitable adjustment to contract terms that exceeds the simplified acquisition threshold shall bear, at the time of submission, the following certificate executed by an individual authorized to certify the request on behalf of the Contractor:

I certify that the request is made in good faith, and that the supporting data are accurate and complete to the best of my knowledge and belief.

(Official's Name)

(Title)

(c) The certification in paragraph (b) of this clause requires full disclosure of all relevant facts, including--

(1) Cost or pricing data if required in accordance with subsection 15.403-4 of the Federal Acquisition Regulation (FAR); and

(2) Information other than cost or pricing data, in accordance with subsection 15.403-3 of the FAR, including actual cost data and data to support any estimated costs, even if cost or pricing data are not required.

(d) The certification requirement in paragraph (b) of this clause does not apply to----

(1) Requests for routine contract payments; for example, requests for payment for accepted supplies and services, routine vouchers under a cost-reimbursement type contract, or progress payment invoices; or

(2) Final adjustment under an incentive provision of the contract.

252.247-7024 Notification of Transportation of Supplies by Sea (MAR 2000)

(a) The Contractor has indicated by the response to the solicitation provision, Representation of Extent of Transportation by Sea, that it did not anticipate transporting by sea any supplies. If, however, after the award of this contract, the Contractor learns that supplies, as defined in the Transportation of Supplies by Sea clause of this contract, will be transported by sea, the Contractor --

(1) Shall notify the Contracting Officer of that fact; and

(2) Hereby agrees to comply with all the terms and conditions of the Transportation of Supplies by Sea clause of this contract.

(b) The Contractor shall include this clause; including this paragraph (b), revised as necessary to reflect the relationship of the contracting parties--

(1) In all subcontracts under this contract, if this contract is a construction contract; or

(2) If this contract is not a construction contract, in all subcontracts under this contract that are for--

(i) Noncommercial items; or

(ii) Commercial items that--

(A) The Contractor is reselling or distributing to the Government without adding value (generally, the Contractor does not add value to items that it subcontracts for f.o.b. destination shipment);

(B) Are shipped in direct support of U.S. military contingency operations, exercises, or forces deployed in humanitarian or peacekeeping operations; or

(C) Are commissary or exchange cargoes transported outside of the Defense Transportation System in accordance with 10 U.S.C. 2643.

(End of clause)

SECTION 00800 Special Contract Requirements

52.211-10 COMMENCEMENT, PROSECUTION, AND COMPLETION OF WORK (APR 1984) 2
52.211-12 LIQUIDATED DAMAGES--CONSTRUCTION (SEP 2000) 2
52.211-18 VARIATION IN ESTIMATED QUANTITY (APR 1984) 2
52.222-23 NOTICE OF REQUIREMENT FOR AFFIRMATIVE ACTION TO ENSURE EQUAL EMPLOYMENT OPPORTUNITY FOR CONSTRUCTION (FEB 1999) 2
52.228-12 Prospective Subcontractor Requests for Bonds. (OCT 1995) 3
52.228-14 IRREVOCABLE LETTER OF CREDIT (DEC 1999) 3
52.228-15 Performance and Payment Bonds--Construction (JUL 2000)- 7
52.0001-4001 CONTRACT ADMINISTRATION DATA 8
52.0028-4001 REQUIRED INSURANCE 8
52.0231-4001 EQUIPMENT OWNERSHIP AND OPERATING EXPENSE SCHEDULE (MAR 1995). 9
EFARS 52-231-5000 9
52.232-33 PAYMENT BY ELECTRONIC FUNDS TRANSFER—CENTRAL CONTRACTOR REGISTRATION (MAY 1999) 9
52.232-4001 CONTINUING CONTRACTS (ALTERNATE) (MAR 1995) EFARS 52-232-5002 11
52.236-4 PHYSICAL DATA (APR 1984) 12
52.236-16 QUANTITY SURVEYS, ALTERNATE I (APR 1984) 12
52.236-21 SPECIFICATIONS AND DRAWINGS FOR CONSTRUCTION (FEB 1997) 13
52.0236-4001 PLANT AND MATERIAL REMOVAL AFTER CONTRACT TERMINATION (MAR 1996) EFARS 52.236-5000 13
520249-4001 BASIS FOR SETTLEMENT OF PROPOSALS EFARS 52.249-5000 14
252.236-7001 CONTRACT DRAWINGS, MAPS, AND SPECIFICATIONS (AUG 2000) 14

SECTION 00800

52.211-10 COMMENCEMENT, PROSECUTION, AND COMPLETION OF WORK (APR 1984)

The Contractor shall be required to (a) commence work under this contract within 1 calendar day after the date the Contractor receives the notice to proceed, (b) prosecute the work diligently, and (c) complete the entire work ready for use not later than 300 calendar days after the Contractor received the Notice to Proceed. The Notice of Award constitutes the Notice to Proceed. The Notice to Proceed will be provided at the time of notice of award. The time stated for completion shall include final cleanup of the premises.

(End of clause)

52.211-12 LIQUIDATED DAMAGES--CONSTRUCTION (SEP 2000)

(a) If the Contractor fails to complete the work within the time specified in the contract, the Contractor shall pay liquidated damages to the Government in the amount of $1,350.00 for each calendar day of delay until the work is completed or accepted.

(b) If the Government terminates the Contractor's right to proceed, liquidated damages will continue to accrue until the work is completed. These liquidated damages are in addition to excess costs of repurchase under the Termination clause.

(End of clause)

52.211-18 VARIATION IN ESTIMATED QUANTITY (APR 1984)

If the quantity of a unit-priced item in this contract is an estimated quantity and the actual quantity of the unit-priced item varies more than 15 percent above or below the estimated quantity, an equitable adjustment in the contract price shall be made upon demand of either party. The equitable adjustment shall be based upon any increase or decrease in costs due solely to the variation above 115 percent or below 85 percent of the estimated quantity. If the quantity variation is such as to cause an increase in the time necessary for completion, the Contractor may request, in writing, an extension of time, to be received by the Contracting Officer within 10 days from the beginning of the delay, or within such further period as may be granted by the Contracting Officer before the date of final settlement of the contract. Upon the receipt of a written request for an extension, the Contracting Officer shall ascertain the facts and make an adjustment for extending the completion date as, in the judgement of the Contracting Officer, is justified.

52.222-23 NOTICE OF REQUIREMENT FOR AFFIRMATIVE ACTION TO ENSURE EQUAL EMPLOYMENT OPPORTUNITY FOR CONSTRUCTION (FEB 1999)

(a) The offeror's attention is called to the Equal Opportunity clause and the Affirmative Action Compliance Requirements for Construction clause of this solicitation.

(b) The goals for minority and female participation, expressed in percentage terms for the Contractor's aggregate workforce in each trade on all construction work in the covered area, are as follows:

Goals for minority participation for each trade	Goals for female participation for each trade
13.9%	6.9%

These goals are applicable to all the Contractor's construction work performed in the covered area. If the Contractor performs construction work in a geographical area located outside of the covered area, the

Contractor shall apply the goals established for the geographical area where the work is actually performed. Goals are published periodically in the Federal Register in notice form, and these notices may be obtained from any Office of Federal Contract Compliance Programs office.

(c) The Contractor's compliance with Executive Order 11246, as amended, and the regulations in 41 CFR 60-4 shall be based on (1) its implementation of the Equal Opportunity clause, (2) specific affirmative action obligations required by the clause entitled "Affirmative Action Compliance Requirements for Construction," and (3) its efforts to meet the goals. The hours of minority and female employment and training must be substantially uniform throughout the length of the contract, and in each trade. The Contractor shall make a good faith effort to employ minorities and women evenly on each of its projects. The transfer of minority or female employees or trainees from Contractor to Contractor, or from project to project, for the sole purpose of meeting the Contractor's goals shall be a violation of the contract, Executive Order 11246, as amended, and the regulations in 41 CFR 60-4. Compliance with the goals will be measured against the total work hours performed.

(d) The Contractor shall provide written notification to the Deputy Assistant Secretary for Federal Contract Compliance, U.S. Department of Labor, within 10 working days following award of any construction subcontract in excess of $10,000 at any tier for construction work under the contract resulting from this solicitation. The notification shall list the --

(1) Name, address, and telephone number of the subcontractor;

(2) Employer's identification number of the subcontractor;

(3) Estimated dollar amount of the subcontract;

(4) Estimated starting and completion dates of the subcontract; and

(5) Geographical area in which the subcontract is to be performed.

(e) As used in this Notice, and in any contract resulting from this solicitation, the "covered area" is Clark County, Nevada.

52.228-12 Prospective Subcontractor Requests for Bonds. (OCT 1995)

In accordance with Section 806(a)(3) of Pub. L. 102-190, as amended by Sections 2091 and 8105 of Pub. L. 103-355, upon the request of a prospective subcontractor or supplier offering to furnish labor or material for the performance of this contract for which a payment bond has been furnished to the Government pursuant to the Miller Act, the Contractor shall promptly provide a copy of such payment bond to the requester.

52.228-14 IRREVOCABLE LETTER OF CREDIT (DEC 1999)

(a) “Irrevocable letter of credit” (ILC), as used in this clause, means a written commitment by a federally insured financial institution to pay all or part of a stated amount of money, until the expiration date of the letter, upon presentation by the Government (the beneficiary) of a written demand therefor. Neither the financial institution nor the offeror/Contractor can revoke or condition the letter of credit.

(b) If the offeror intends to use an ILC in lieu of a bid bond, or to secure other types of bonds such as performance and payment bonds, the letter of credit and letter of confirmation formats in paragraphs (e) and (f) of this clause shall be used.

(c) The letter of credit shall be irrevocable, shall require presentation of no document other than a written demand and the ILC (including confirming letter, if any), shall be issued/confirmed by an acceptable

federally insured financial institution as provided in paragraph (d) of this clause, and--

(1) If used as a bid guarantee, the ILC shall expire no earlier than 60 days after the close of the bid acceptance period;

(2) If used as an alternative to corporate or individual sureties as security for a performance or payment bond, the offeror/Contractor may submit an ILC with an initial expiration date estimated to cover the entire period for which financial security is required or may submit an ILC with an initial expiration date that is a minimum period of one year from the date of issuance. The ILC shall provide that, unless the issuer provides the beneficiary written notice of non-renewal at least 60 days in advance of the current expiration date, the ILC is automatically extended without amendment for one year from the expiration date, or any future expiration date, until the period of required coverage is completed and the Contracting Officer provides the financial institution with a written statement waiving the right to payment. The period of required coverage shall be:

(i) For contracts subject to the Miller Act, the later of--

(A) One year following the expected date of final payment;

(B) For performance bonds only, until completion of any warranty period; or

(C) For payment bonds only, until resolution of all claims filed against the payment bond during the one-year period following final payment.

(ii) For contracts not subject to the Miller Act, the later of--

(A) 90 days following final payment; or

(B) For performance bonds only, until completion of any warranty period.

(d) Only federally insured financial institutions rated investment grade or higher shall issue or confirm the ILC. The offeror/Contractor shall provide the Contracting Officer a credit rating that indicates the financial institution has the required rating(s) as of the date of issuance of the ILC. Unless the financial institution issuing the ILC had letter of credit business of less than $25 million in the past year, ILCs over $5 million must be confirmed by another acceptable financial institution that had letter of credit business of less than $25 million in the past year.

(e) The following format shall be used by the issuing financial institution to create an ILC:

_____

[Issuing Financial Institution's Letterhead or Name and Address]

Issue Date _____

IRREVOCABLE LETTER OF CREDIT NO. _____

Account party's name _____

Account party's address _____

For Solicitation No. _____(for reference only)

TO: [U.S. Government agency]

[U.S. Government agency's address]

1. We hereby establish this irrevocable and transferable Letter of Credit in your favor for one or more drawings up to United States $_____. This Letter of Credit is payable at [issuing financial institution's and, if any, confirming financial institution's] office at [issuing financial institution's address and, if any, confirming financial institution's address] and expires with our close of business on _____, or any automatically extended expiration date.

2. We hereby undertake to honor your or the transferee's sight draft(s) drawn on the issuing or, if any, the confirming financial institution, for all or any part of this credit if presented with this Letter of Credit and confirmation, if any, at the office specified in paragraph 1 of this Letter of Credit on or before the expiration date or any automatically extended expiration date.

3. [This paragraph is omitted if used as a bid guarantee, and subsequent paragraphs are renumbered.] It is a condition of this Letter of Credit that it is deemed to be automatically extended without amendment for one year from the expiration date hereof, or any future expiration date, unless at least 60 days prior to any expiration date, we notify you or the transferee by registered mail, or other receipted means of delivery, that we elect not to consider this Letter of Credit renewed for any such additional period. At the time we notify you, we also agree to notify the account party (and confirming financial institution, if any) by the same means of delivery.

4. This Letter of Credit is transferable. Transfers and assignments of proceeds are to be effected without charge to either the beneficiary or the transferee/assignee of proceeds. Such transfer or assignment shall be only at the written direction of the Government (the beneficiary) in a form satisfactory to the issuing financial institution and the confirming financial institution, if any.

5. This Letter of Credit is subject to the Uniform Customs and Practice (UCP) for Documentary Credits, 1993 Revision, International Chamber of Commerce Publication No. 500, and to the extent not inconsistent therewith, to the laws of _____ [state of confirming financial institution, if any, otherwise state of issuing financial institution].

6. If this credit expires during an interruption of business of this financial institution as described in Article 17 of the UCP, the financial institution specifically agrees to effect payment if this credit is drawn against within 30 days after the resumption of our business.

Sincerely,

_____

[Issuing financial institution]

(f) The following format shall be used by the financial institution to confirm an ILC:

_____

[Confirming Financial Institution's Letterhead or Name and Address]

(Date) _____

Our Letter of Credit Advice Number _____

Beneficiary: _____ [U.S. Government agency]

Issuing Financial Institution: _____

Issuing Financial Institution's LC No.: _____

Gentlemen:

1. We hereby confirm the above indicated Letter of Credit, the original of which is attached, issued by _____ [name of issuing financial institution] for drawings of up to United States dollars _____/U.S. $_____ and expiring with our close of business on _____ [the expiration date], or any automatically extended expiration date.

2. Draft(s) drawn under the Letter of Credit and this Confirmation are payable at our office located at _____.

3. We hereby undertake to honor sight draft(s) drawn under and presented with the Letter of Credit and this Confirmation at our offices as specified herein.

4. [This paragraph is omitted if used as a bid guarantee, and subsequent paragraphs are renumbered.] It is a condition of this confirmation that it be deemed automatically extended without amendment for one year from the expiration date hereof, or any automatically extended expiration date, unless:

(a) At least 60 days prior to any such expiration date, we shall notify the Contracting Officer, or the transferee and the issuing financial institution, by registered mail or other receipted means of delivery, that we elect not to consider this confirmation extended for any such additional period; or

(b) The issuing financial institution shall have exercised its right to notify you or the transferee, the account party, and ourselves, of its election not to extend the expiration date of the Letter of Credit.

5. This confirmation is subject to the Uniform Customs and Practice (UCP) for Documentary Credits, 1993 Revision, International Chamber of Commerce Publication No. 500, and to the extent not inconsistent therewith, to the laws of _____ [state of confirming financial institution].

6. If this confirmation expires during an interruption of business of this financial institution as described in Article 17 of the UCP, we specifically agree to effect payment if this credit is drawn against within 30 days after the resumption of our business.

Sincerely,

_____

[Confirming financial institution]

(g) The following format shall be used by the Contracting Officer for a sight draft to draw on the Letter of Credit:
SIGHT DRAFT

_____
[City, State]

(Date) _____

[Name and address of financial institution]

Pay to the order of _____ [Beneficiary Agency] _____ the sum of United States $_____. This draft is drawn under Irrevocable Letter of Credit No. _____.

_____

[Beneficiary Agency]

By: _____

(End of clause)

52.228-15 Performance and Payment Bonds--Construction (JUL 2000)-

(a) Definitions. As used in this clause--

Original contract price means the award price of the contract; or, for requirements contracts, the price payable for the estimated total quantity; or, for indefinite-quantity contracts, the price payable for the specified minimum quantity. Original contract price does not include the price of any options, except those options exercised at the time of contract award.

(b) Amount of required bonds. Unless the resulting contract price is $100,000 or less, the successful offeror shall furnish performance and payment bonds to the Contracting Officer as follows:

(1) Performance bonds (Standard Form 25). The penal amount of performance bonds at the time of contract award shall be 100 percent of the original contract price.

(2) Payment Bonds (Standard Form 25-A). The penal amount of payment bonds at the time of contract award shall be 100 percent of the original contract price.

(3) Additional bond protection. (i) The Government may require additional performance and payment bond protection if the contract price is increased. The increase in protection generally will equal 100 percent of the increase in contract price.

(ii) The Government may secure the additional protection by directing the Contractor to increase the penal amount of the existing bond or to obtain an additional bond.

(c) Furnishing executed bonds. The Contractor shall furnish all executed bonds, including any necessary reinsurance agreements, to the Contracting Officer, within the time period specified in the Bid Guarantee provision of the solicitation, or otherwise specified by the Contracting Officer, but in any event, before starting work.

(d) Surety or other security for bonds. The bonds shall be in the form of firm commitment, supported by corporate sureties whose names appear on the list contained in Treasury Department Circular 570, individual sureties, or by other acceptable security such as postal money order, certified check, cashier's

check, irrevocable letter of credit, or, in accordance with Treasury Department regulations, certain bonds or notes of the United States. Treasury Circular 570 is published in the Federal Register or may be obtained from the U.S. Department of Treasury, Financial Management Service, Surety Bond Branch, 401 14th Street, NW, 2nd Floor, West Wing, Washington, DC 20227.

(e) Notice of subcontractor waiver of protection (40 U.S.C. 270b(c). Any waiver of the right to sue on the payment bond is void unless it is in writing, signed by the person whose right is waived, and executed after such person has first furnished labor or material for use in the performance of the contract.

(End of clause)

52.0001-4001 CONTRACT ADMINISTRATION DATA

The Contract Administration Office for this contract subsequent to award is:

Department of the Army
Los Angeles District, Corps of Engineers
P.O. Box 532711
Los Angeles, California 90053-2325

ATTN: Ms. Diane Watkins
Telephone No: Area Code (213) 452-3251

Payment will be made by:

USACE Finance Center
ATTN: CEFC-AO-P
5270 Integrity Drive
Millington, TN 38054-5005

Submit Invoices to:

Mr. Robert Caskie
Tropicana Project Office
4440 South Durango Drive, Suite D
Las Vegas, NV 89147

52.0028-4001 REQUIRED INSURANCE

Insurance is required as follows:

a. Either Workman's Compensation or Employer's Liability Insurance with a minimum limit of $100,000.00.

b. General Liability. The Contracting Officer shall require bodily injury liability insurance coverage written on the comprehensive form or policy of at least $500,000.00 per occurrence.

c. Automobile Liability Insurance for Bodily Injury and Property Damage with minimum limits of $200,000.00 for injury or death of any one person; $500,000.00 for each accident or occurrence of bodily injury liability; and $20,000.00 for each accident or occurrence for property liability.

d. In every case the insurance coverage shall amount to at least the limits stated above. However, where the Financial Responsibility Compulsory Insurance Law of the State in which the installation is

located requires higher limits, the Automobile Liability Insurance Policy should provide coverage of at least those limits.

Prior to the commencement of work hereunder, the Contractor shall furnish to the Contracting Office a certificate or written statement of the above required insurance. The policies evidencing required insurance shall contain an endorsement to the effect that cancellation or any material change in the policies adversely affecting the interests of the Government in such insurance shall not be effective until 10 days after written notice thereof to the Contracting Officer.

The Contractor agrees to insert the substance of this clause, including this paragraph, in all subcontracts

52.0231-4001 EQUIPMENT OWNERSHIP AND OPERATING EXPENSE SCHEDULE (MAR 1995) EFARS 52-231-5000

(a) Allowable costs for construction and marine plant and equipment in sound workable condition owned or controlled and furnished by a contractor or subcontractor at any tier shall be based on actual cost data for each piece of equipment or groups of similar serial and series for which the Government can determine both ownership and operating costs from the contractor's accounting records. When both ownership and operating costs cannot be determined for any piece of equipment or groups of similar serial or series equipment from the contractor's accounting records, costs for that equipment shall be based upon the applicable provisions of EP 1110-1-8, "Construction Equipment Ownership and Operating Expense Schedule," Region VII. Working conditions shall be considered to be average for determining equipment rates using the formula provided in the schedule. For forward pricing, the schedule in effect at the time of negotiations shall apply. For retrospective pricing, the schedule in effect at the time the work was performed shall apply.

(b) Equipment rental costs are allowable, subject to the provisions of FAR 31.105(d)(ii) and FAR 31.205-36 substantiated by certified copies of paid invoices. Rates for equipment rented from an organization under common control, lease-purchase or sale-leaseback arrangements will be determined using the schedule except that rental costs leased from an organization under common control that has an established practice of leasing the same or similar equipment to unaffiliated lessees are allowable. Costs for major repairs and overhaul are unallowable.

(c) When actual equipment costs are proposed and the total amount of the pricing action is over $25,000, cost or pricing data shall be submitted on Standard Form 1411, "Contract Pricing Proposal Cover Sheet." By submitting cost or pricing data, the contractor grants to the contracting officer or an authorizing representative the right to examine those books, records, documents and other supporting data that will permit evaluation of the proposed equipment costs. After price agreement the contractor shall certify that the equipment costs of pricing data submitted are accurate, complete and current.

(End of clause)

52.232-33 PAYMENT BY ELECTRONIC FUNDS TRANSFER—CENTRAL CONTRACTOR REGISTRATION (MAY 1999)

(a) Method of payment. (1) All payments by the Government under this contract shall be made by electronic funds transfer (EFT), except as provided in paragraph (a)(2) of this clause. As used in this clause, the term “EFT” refers to the funds transfer and may also include the payment information transfer.

(2) In the event the Government is unable to release one or more payments by EFT, the Contractor agrees to either--

(i) Accept payment by check or some other mutually agreeable method of payment; or

(ii) Request the Government to extend the payment due date until such time as the Government can make payment by EFT (but see paragraph (d) of this clause).

(b) Contractor's EFT information. The Government shall make payment to the Contractor using the EFT information contained in the Central Contractor Registration (CCR) database. In the event that the EFT information changes, the Contractor shall be responsible for providing the updated information to the CCR database.

(c) Mechanisms for EFT payment. The Government may make payment by EFT through either the Automated Clearing House (ACH) network, subject to the rules of the National Automated Clearing House Association, or the Fedwire Transfer System. The rules governing Federal payments through the ACH are contained in 31 CFR part 210.

(d) Suspension of payment. If the Contractor's EFT information in the CCR database is incorrect, then the Government need not make payment to the Contractor under this contract until correct EFT information is entered into the CCR database; and any invoice or contract financing request shall be deemed not to be a proper invoice for the purpose of prompt payment under this contract. The prompt payment terms of the contract regarding notice of an improper invoice and delays in accrual of interest penalties apply.

(e) Contractor EFT arrangements. If the Contractor has identified multiple payment receiving points (i.e., more than one remittance address and/or EFT information set) in the CCR database, and the Contractor has not notified the Government of the payment receiving point applicable to this contract, the Government shall make payment to the first payment receiving point (EFT information set or remittance address as applicable) listed in the CCR database.

(f) Liability for uncompleted or erroneous transfers. (1) If an uncompleted or erroneous transfer occurs because the Government used the Contractor's EFT information incorrectly, the Government remains responsible for--

(i) Making a correct payment;

(ii) Paying any prompt payment penalty due; and

(iii) Recovering any erroneously directed funds.

(2) If an uncompleted or erroneous transfer occurs because the Contractor's EFT information was incorrect, or was revised within 30 days of Government release of the EFT payment transaction instruction to the Federal Reserve System, and--

(i) If the funds are no longer under the control of the payment office, the Government is deemed to have made payment and the Contractor is responsible for recovery of any erroneously directed funds; or

(ii) If the funds remain under the control of the payment office, the Government shall not make payment, and the provisions of paragraph (d) of this clause shall apply.

(g) EFT and prompt payment. A payment shall be deemed to have been made in a timely manner in accordance with the prompt payment terms of this contract if, in the EFT payment transaction instruction

released to the Federal Reserve System, the date specified for settlement of the payment is on or before the prompt payment due date, provided the specified payment date is a valid date under the rules of the Federal Reserve System.

(h) EFT and assignment of claims. If the Contractor assigns the proceeds of this contract as provided for in the assignment of claims terms of this contract, the Contractor shall require as a condition of any such assignment, that the assignee shall register in the CCR database and shall be paid by EFT in accordance with the terms of this clause. In all respects, the requirements of this clause shall apply to the assignee as if it were the Contractor. EFT information that shows the ultimate recipient of the transfer to be other than the Contractor, in the absence of a proper assignment of claims acceptable to the Government, is incorrect EFT information within the meaning of paragraph (d) of this clause.

(i) Liability for change of EFT information by financial agent. The Government is not liable for errors resulting from changes to EFT information made by the Contractor's financial agent.

(j) Payment information. The payment or disbursing office shall forward to the Contractor available payment information that is suitable for transmission as of the date of release of the EFT instruction to the Federal Reserve System. The Government may request the Contractor to designate a desired format and method(s) for delivery of payment information from a list of formats and methods the payment office is capable of executing. However, the Government does not guarantee that any particular format or method of delivery is available at any particular payment office and retains the latitude to use the format and delivery method most convenient to the Government. If the Government makes payment by check in accordance with paragraph (a) of this clause, the Government shall mail the payment information to the remittance address contained in the CCR database.

(End of Clause)

52.232-4001 CONTINUING CONTRACTS (ALTERNATE) (MAR 1995) EFARS 52-232-5002

(a) Funds are not available at the inception of this contract to cover the entire contract price. The sum of $1,500,000.00 has been reserved for this contract and is available for payment to the contractor during the current fiscal year. It is expected that Congress will make appropriations for future fiscal years from which additional funds, together with funds provided by one or more non-federal project sponsors will be reserved for this contract. The liability of the United States for payment beyond the funds reserved for this contract is contingent on the reservation of additional funds.

(b) Failure to make payment in excess of the amount currently reserved, or that may be reserved from time to time, shall not be considered a breach of this contract, and shall not entitle the contractor to a price adjustment under the terms of this contract except as specifically provided in paragraphs (e) and (h) below.

(c) The Government may at any time reserve additional funds for payments under the contract if there are funds available for such purpose. The contracting officer will promptly notify the contractor of any additional funds reserved for the contract by issuing and administrative modification to the contract.

(d) If earnings will be such that funds reserved for the contract will be exhausted before the end of any fiscal year, the contractor shall give written notice to the contracting officer of the estimated date of exhaustion and of additional funds which will be needed to meet payments due or to become due under this contract during that fiscal year. This notice shall be given not less than 45 nor more than 60 days prior to the estimated date of exhaustion.

(e) No payments will be made after exhaustion of funds except to the extent that additional funds are reserved for the contract. If and when sufficient additional funds are reserved, the contractor shall be entitled to simple interest on any payment that the contracting officer determines was actually earned under the terms of this contract and would have been made except for exhaustion of funds. Interest shall be computed from the time such payment would otherwise have been made until actually or constructively made, and shall be at the rate established by the Secretary of the Treasury pursuant to Public Law 92-41, 85 Stat 97, as in effect on the first day of the delay in such payment.

(f) Any suspension, delay, or interruption of work arising from exhaustion or anticipated exhaustion of funds shall not constitute a breach of this contract and shall not entitle the contractor to any price adjustment under a "Suspension of Work" or similar clause or in any other manner under this contract.

(g) An equitable adjustment in performance time shall be made for any increase in the time required for performance of any part of the work arising from exhaustion of funds or the reasonable anticipation of exhaustion of funds.

(h) If, upon the expiration of sixty (60) days after the beginning of the fiscal year following an exhaustion of funds, the Government has failed to reserve sufficient additional funds to cover payments otherwise due, the contractor, by written notice delivered to the contracting officer at any time before such additional funds are reserved, may elect to treat his right to proceed with the work as having been terminated. Such a termination shall be at no cost to the Government, except that, to the extent that additional funds to make payment therefore are allocated to this contract, it may be treated as a termination for the convenience of the Government.

(i) If at any time it becomes apparent that the funds reserved for any fiscal year are in excess of the funds required to meet all payments due or to become due the contractor because of work performed and to be performed under this contract during the fiscal year, the Government reserves the right, after notice to the contractor, to reduce said reservation by the amount of such excess.

(j) The term "Reservation" means monies that have been set aside and made available for payments under this contract.

(End of clause)

52.236-4 PHYSICAL DATA (APR 1984)

Data and information furnished or referred to below is for the Contractor's information. The Government shall not be responsible for any interpretation of or conclusion drawn from the data or information by the Contractor.

(a) The indications of physical conditions on the drawings and in the specifications are the result of site investigations by surveys.

(b) Weather conditions: The Contractor shall satisfy himself as to the hazards likely to arise from weather conditions.

(c) Transportation facilities: The contractor shall make his own investigation of the conditions of existing public and private roads and clearances, restrictions, bridge load limits and other limitations affecting transportation and ingress and egress at the job site. The unavailability transportation facilities or limitations thereof shall not become a basis for claims against the Government or extensions of time for completion of the work

(d) N/A

52.236-16 QUANTITY SURVEYS, ALTERNATE I (APR 1984)

(a) Quantity surveys shall be conducted, and the data derived from these surveys shall be used in computing the quantities of work performed and the actual construction completed and in place.

(b) The Contractor shall conduct the original and final surveys and surveys for any periods for which progress payments are requested. All these surveys shall be conducted under the direction of a representative of the Contracting Officer, unless the Contracting Officer waives this requirement in a specific instance. The Government shall make such computations as are necessary to determine the quantities of work performed of finally in place. The Contractor shall make the computations based on the surveys for any periods for which progress payments are requested.

(c) Promptly upon completing a survey, the Contractor shall furnish the originals of all field notes and all other records relating to the survey or to the layout of the work to the Contracting Officer, who shall use them as necessary to determine the amount of progress payments. The Contractor shall retain copies of all such material furnished to the Contracting Officer.

52.236-21 SPECIFICATIONS AND DRAWINGS FOR CONSTRUCTION (FEB 1997)

(a) The Contractor shall keep on the work site a copy of the drawings and specifications and shall at all times give the Contracting Officer access thereto. Anything mentioned in the specifications and not shown on the drawings, or shown on the drawings and not mentioned in the specifications, shall be of like effect as if shown or mentioned in both. In case of difference between drawings and specifications, the specifications shall govern. In case of discrepancy in the figures, in the drawings, or in the specifications, the matter shall be promptly submitted to the Contracting Officer, who shall promptly make a determination in writing. Any adjustment by the Contractor without such a determination shall be at its own risk and expense. The Contracting Officer shall furnish from time to time such detailed drawings and other information as considered necessary, unless otherwise provided.

(b) Wherever in the specifications or upon the drawings the words "directed", "required", "ordered", "designated", "prescribed", or words of like import are used, it shall be understood that the "direction", "requirement", "order", "designation", or "prescription", of the Contracting Officer is intended and similarly the words "approved", "acceptable", "satisfactory", or words of like import shall mean "approved by," or "acceptable to", or "satisfactory to" the Contracting Officer, unless otherwise expressly stated.

(c) Where "as shown," as indicated", "as detailed", or words of similar import are used, it shall be understood that the reference is made to the drawings accompanying this contract unless stated otherwise. The word "provided" as used herein shall be understood to mean "provide complete in place," that is "furnished and installed".

(d) Shop drawings means drawings, submitted to the Government by the Contractor, subcontractor, or any lower tier subcontractor pursuant to a construction contract, showing in detail (1) the proposed fabrication and assembly of structural elements, and (2) the installation (i.e., fit, and attachment details) of materials or equipment. It includes drawings, diagrams, layouts, schematics, descriptive literature, illustrations, schedules, performance and test data, and similar materials furnished by the contractor to explain in detail specific portions of the work required by the contract. The Government may duplicate, use, and disclose in any manner and for any purpose shop drawings delivered under this contract.

(e) If this contract requires shop drawings, the Contractor shall coordinate all such drawings, and review them for accuracy, completeness, and compliance with contract requirements and shall indicate its approval thereon as evidence of such coordination and review. Shop drawings submitted to the Contracting Officer without evidence of the Contractor's approval may be returned for resubmission. The Contracting Officer will indicate an approval or disapproval of the shop drawings and if not approved as submitted shall indicate the Government's reasons therefore. Any work done before such approval shall be at the Contractor's risk. Approval by the Contracting Officer shall not relieve the Contractor from responsibility for any errors or omissions in such drawings, nor from responsibility for complying with the requirements of this contract, except with respect to variations described and approved in accordance with (f) below.

(f) If shop drawings show variations from the contract requirements, the Contractor shall describe such variations in writing, separate from the drawings, at the time of submission. If the Contracting Officer approves any such variation, the Contracting Officer shall issue an appropriate contract modification, except that, if the variation is minor or does not involve a change in price or in time of performance, a modification need not be issued.

(g) The Contractor shall submit to the Contracting Officer for approval four copies (unless otherwise indicated) of all shop drawings as called for under the various headings of these specifications. Three sets (unless otherwise indicated) of all shop drawings, will be retained by the Contracting Officer and one set will be returned to the Contractor.

52.0236-4001 PLANT AND MATERIAL REMOVAL AFTER CONTRACT TERMINATION (MAR 1996) EFARS 52.236-5000

Should this contract be terminated as provided in clause 52.232-5001 because of the failure of Congress to provide additional funds for its completion, the contractor may be permitted to remove plant and material on which payments for preparatory work have been made, subject to an equitable deduction from the amounts due the contractor to reimburse the United States for the unabsorbed value of such plant and material.

(End of clause)

52.0249-4001 BASIS FOR SETTLEMENT OF PROPOSALS EFARS 52.249-5000

Actual costs will be used to determine equipment costs for a settlement proposal submitted on the total cost basis under FAR 49.206-2(b). In evaluating a terminations settlement proposal using the total costs basis, the following principals will be applied to determine allowable equipment costs:

(1) Actual costs for each piece of equipment, or groups of similar serial or series equipment, need not be available in the contractor's accounting records to determine total actual equipment costs.

(2) If equipment costs have been allocated to a contract using predetermined rates, those charges will be adjusted to actual costs.

(3) Recorded job costs adjusted for unallowable and unallowable expenses will be used to determine equipment operating expenses. [3]

(4) Ownership costs (depreciation) will be determined using the contractor's depreciation schedule (subject to the provisions of FAR 31.205-11).

(5) License, taxes, storage and insurance costs age normally recovered as an indirect expense and unless the contractor charges these costs directly to contracts, they will be recover through the indirect expense rate.

(End of Statement)

252.236-7001 CONTRACT DRAWINGS, MAPS, AND SPECIFICATIONS (AUG 2000)

(a) The Government will provide to the Contractor, without charge, one set of contract drawings and specifications, except publications incorporated into the technical provisions by reference, in electronic or paper media as chosen by the Contracting Officer.

(b) The Contractor shall--

(1) Check all drawings furnished immediately upon receipt;

(2) Compare all drawings and verify the figures before laying out the work;

(3) Promptly notify the Contracting Officer of any discrepancies;

(4) Be responsible for any errors that might have been avoided by complying with this paragraph (b); and

(5) Reproduce and print contract drawings and specifications as needed.

(c) In general--

(1) Large-scale drawings shall govern small-scale drawings; and

(2) The Contractor shall follow figures marked on drawings in preference to scale measurements.

(d) Omissions from the drawings or specifications or the misdescription of details of work that are manifestly necessary to carry out the intent of the drawings and specifications, or that are customarily performed, shall not relieve the Contractor from performing such omitted or misdescribed details of the work. The Contractor shall perform such details as if fully and correctly set forth and described in the drawings and specifications.

(e) The work shall conform to the specifications and the contract drawings identified on the following index of drawings:

FILE NO.	TITLE	SHEET NO.
196/801	PROJECT LOCATION MAP, VICINITY MAP	T-1
196/802	INDEX TO CONTRACT DRAWINGS AND ABBREVIATIONS AND LEGEND	T-2
196/803	DISPOSAL SITE	T-3
196/804	SURVEY CONTROL	R-1
196/805	RIGHT-OF-WAY, STA 37+52.022 TO STA 33+00.000	R-2
196/806	RIGHT-OF-WAY, STA 33+00.000 TO STA 26+00.000	R-3
196/807	RIGHT-OF-WAY, STA 26+00.000 TO STA 19+00.000	R-4
196/808	RIGHT-OF-WAY, STA 19+00.000 TO STA 14+26.483	R-5
196/809	PLAN AND PROFILE, STA 37+52.022 TO STA 35+00.000	C-1
196/810	PLAN AND PROFILE, STA 35+00.000 TO STA 32+00.000	C-2
196/811	PLAN AND PROFILE, STA 32+00.000 TO STA 28+50.000	C-3
196/812	PLAN AND PROFILE, STA 28+00.000 TO STA 26+00.000	C-4
196/813	PLAN AND PROFILE, STA 26+00.000 TO STA 23+00.000	C-5
196/814	PLAN AND PROFILE, STA 23+00.000 TO STA 20+00.000	C-6
196/815	PLAN AND PROFILE, STA 20+00.000 TO STA 17+00.000	C-7
196/816	PLAN AND PROFILE, STA 17+00.000 TO STA 14+26.483	C-8

FILE NO.	TITLE	SHEET NO.
196/817	F-2 CHANNEL PLAN AND PROFILE, STA 12+53.613 TO STA 10+00.000	C-9
196/818	TYPICAL CHANNEL SECTIONS	C-10
196/819	CHANNEL CROSS SECTIONS, STA 16+00.000 TO STA 26+00.000	C-11
196/820	CHANNEL CROSS SECTIONS, STA 28+00.000 TO STA 37+50.000	C-12
196/821	F-2 CHANNEL CROSS SECTIONS, STA 11+00.000 TO STA 12+00.000	C-13
196/822	CIVIL DETAILS - I	C-14
196/823	CIVIL DETAILS - II	C-15
196/824	CIVIL DETAILS - III	C-16
196/825	CIVIL DETAILS - IV	C-17
196/826	CIVIL DETAILS - V	C-18
196/827	PLAN & PROFILE, FORT APACHE LATERAL	C-19
196/828	PLAN & PROFILE, HUALAPI WAY	C-20
196/829	PLAN & PROFILE, GRAND CANYON	C-21
196/830	PLAN & PROFILE, FORT APACHE ROAD	C-22
196/831	GENERAL STRUCTURAL NOTES AND DETAILS	S-01
196/832	SIDE DRAIN DETAILS AND SCHEDULE	S-02
196/833	RCB AND RECTANGULAR CHANNEL REINFORCEMENT SCHEDULES	S-03
196/834	ACCESS RAMP #1 PLAND AND SECTION	S-04
196/835	ACCESS RAMP #1 SECTIONS AND DETAILS	S-05
196/836	CONFLUENCE #1 PLAN AND CONFLUENCE #2 PLAN	S-06
196/837	CONFLUENCE #2 SECTIONS	S-07
196/838	CONFLUENCE #1 SECTIONS AND DETAILS AND TYPICAL HEADWALL DETAIL	S-08

FILE NO.	TITLE	SHEET NO.
196/839	ACCESS RAMP #2 PLAN AND SECTION	S-09
196/840	ACCESS RAMP #2 SECTIONS AND DETAILS	S-10

General Decision Number NV010005
Superseded General Decision No. **NV000005**
State: Nevada
Construction Type:
HEAVY
HIGHWAY
County(ies):

CARSON CITY	EUREKA	NYE
CHURCHILL	HUMBOLDT	PERSHING
CLARK	LANDER	STOREY
DOUGLAS	LINCOLN	WASHOE
ELKO	LYON	WHITE PINE
ESMERALDA	MINERAL	

HEAVY AND HIGHWAY CONSTRUCTION PROJECTS (Except construction projects at the NEVADA TEST SITE and TONOPAH TEST RANGE) (and Excluding Water Well Drilling)

Modification Number	Publication Date
0	03/02/2001
1	05/04/2001
2	06/22/2001
3	07/13/2001
4	11/02/2001
5	11/30/2001
6	12/14/2001
7	12/28/2001

COUNTY(ies):

CARSON CITY	EUREKA	NYE
CHURCHILL	HUMBOLDT	PERSHING
CLARK	LANDER	STOREY
DOUGLAS	LINCOLN	WASHOE
ELKO	LYON	WHITE PINE
ESMERALDA	MINERAL	

CARP0034L 07/01/1998

	Rates	Fringes
CARSON CITY, CHURCHILL, DOUGLAS, ELKO, EUREKA, HUMBOLDT, LANDER, LYON, MINERAL, PERSHING, STOREY, WASHOE AND WHITE PINE COUNTIES		
DIVER STANDBY	27.65	12.425
DIVER WET	38.90	12.425
DIVER TENDER	27.65	12.425
PILE DRIVERS:		
(Bridge, Warf & Dock Builders)	25.65	12.425

CARP0971E 07/01/2001

	Rates	Fringes
CHURCHILL, DOUGLAS, ELKO, EUREKA, HUMBOLDT, LANDER, LYON, MINERAL, PERSHING, STOREY, WASHOE, AND WHITE PINE.		
CARPENTERS	24.95	5.75

CARP1780A 07/01/1999

	Rates	Fringes
CLARK, ESMERALDA, LINCOLN AND NYE COUNTIES		
CARPENTERS:		
30 Mile radius around Las Vegas (Measured from the intersection of Maryland Parkway and Charleston Blvd.)	27.18	7.65
30 to 50 Mile radius around		

Las Vegas (same as above)	28.68	7.65
Over 50 mile Mile radius around Las Vegas (same as above)	30.43	7.65
Laughlin Area	29.18	7.65

ELEC0357F 12/01/2001

	Rates	Fringes
CLARK, LINCOLN, AND NYE (South of the Mt. Diablo Base Line) COUNTIES		
ELECTRICIANS	28.55	10.21+3%

ELEC0357G 07/01/1997

	Rates	Fringes
CLARK, LINCOLN, AND NYE COUNTIES		
LINE CONSTRUCTION WORKERS:		
Area bound by a 30 mile radius from the intersection of Main Street and Fremont Street in Las Vegas (Free Area)		
Groundman	17.98	5.95+3%
Line Equipment Operators	21.86	5.95+3%
Lineman	24.45	5.95+3%
Area between a 30 mile radius and 60 mile radius from Main and Fremont Streets		
Groundman	18.98	5.95+3%
Line Equipment Operators	22.86	5.95+3%
Lineman	25.45	5.95+3%
Area Over 60 mile radius from Main and Fremont Streets		
Groundman	20.98	5.95+3%
Line Equipment Operators	24.86	5.95+3%
Lineman	27.45	5.95+3%

ELEC0401F 12/01/2001

	Rates	Fringes
CHURCHILL, DOUGLAS, ELKO, ESMERALDA, EUREKA, HUMBOLDT, LANDER, LYON, MINERAL, PERSHING, STOREY, WASHOE, AND WHITE PINE COUNTYS.		
ELECTRICIANS:		
ELECTRICAINS	26.69	7.10+3%
CABLE SPLICER	29.36	7.10+3%

ELEC0401G 02/01/1993

	Rates	Fringes
CHURCHILL, DOUGLAS, ELKO, ESMERALDA, EUREKA, LANDER, LYON, MINERAL, PERSHING, STOREY, WASHOE, AND WHITE PINES COUNTYS.		
LINE CONSTRUCTION:		
Lineman	21.74	5.34+33/4%
Cable Splicer	23.91	5.34+33/4%
Equipment Operator	19.57	5.34+33/4%
Groundman	14.13	5.34+33/4%

ENGI0012H 08/01/1999

	Rates	Fringes
HYDRAULIC SUCTION AND CLAMSHELL DREDGES		
Leverman	34.20	8.00

Deck Captain	31.30	8.00
Dozer	30.73	8.00
Watch Engineer, Welder and Deckmate	30.62	8.00
Winchman (Stern Winch) (on dredge)	30.07	8.00
Deckhand (can operate anchor scow under direction of mate), Bargeman	29.53	8.00
Barge mate	30.14	8.00

ENGI0012J 07/01/2000

	Rates	Fringes
CLARK, ESMERALDA LINCOLN AND NYE COUNTIES		
POWER EQUIPMENT OPERATORS:		
Group 1	28.54	8.30
Group 2	29.49	8.30
Group 3	29.78	8.30
Group 4	30.67	8.30
Group 5	31.77	8.30
Group 6	30.89	8.30
Group 7	31.99	8.30
Group 8	31.00	8.30
Group 9	32.10	8.30
Group 10	31.12	8.30
Group 11	32.22	8.30
Group 12	31.29	8.30
Group 13	31.39	8.30
Group 14	31.42	8.30
Group 15	31.50	8.30
Group 16	31.62	8.30
Group 17	31.79	8.30
Group 18	31.89	8.30
Group 19	32.00	8.30
Group 20	32.12	8.30
Group 21	32.29	8.30
Group 22	32.39	8.30
Group 23	32.50	8.30
Group 24	32.62	8.30
CRANES, PILEDRIVING & HOISTING EQUIPMENT		
Group 1	29.29	8.30
Group 2	30.24	8.30
Group 3	30.53	8.30
Group 4	30.67	8.30
Group 5	30.89	8.30
Group 6	31.00	8.30
Group 7	31.12	8.30
Group 8	31.29	8.30
Group 9	31.46	8.30
Group 10	32.46	8.30
Group 11	33.96	8.30
Group 12	34.46	8.30
Group 13	35.46	8.30
TUNNEL GROUP:		
Group 1	30.74	8.30
Group 2	31.03	8.30
Group 3	31.17	8.30

Group 4	31.39	8.30
Group 5	31.50	8.30
Group 6	31.62	8.30
Group 7	31.79	8.30

From the City Hall of Las Vegas
20 Miles to 40 Miles - add $1.50 per hour to wage rates
40 Miles to 60 Miles - add $2.50 per hour to wage rates
Over 60 Miles - add $3.00 per hour to wage rates

POWER EQUIPMENT OPERATOR CLASSIFICATIONS:

GROUP 1: Bargeman, brakeman, compressor operator (when more than five (5) 900 CFM or larger units, additional operator required), ditch witch, with seat or similar type equipment, elevator operator - inside, engineer oiler, generator operator, generator, pump or compressor plant operator, pump operator, signalman, switchman

GROUP 2: Asphalt - rubber plant operator, concrete mixer operator - skip type, conveyor operator, fireman, hydrostatic pump operator, oiler crusher (asphalt or concrete plant), skiploader (when wheel type up to 3/4 yd. without attachment), soils field technician, tar pot fireman, temporary heating plant operator, trenching machine oiler, nurse tank operator.

GROUP 3: Asphalt - rubber blend operator, equipment greaser (rack), ford ferguson (with dragtype attachments), helicopter radioman (ground), power concrete curing machine operator, power concrete saw operator, power - driven jumbo form setter operator, stationary pipe wrapping and cleaning machine operator

GROUP 4: Asphalt plant fireman, backhoe operator (mini-max or similar type), boring machine operator, boxman or mixerman (asphalt or concrete), chip spreading machine operator, concrete pump operator (small portable), drilling machine operator, small auger types (Texoma super economatic or similar types - Hughes 100 or 200 or similar types - drilling depth of 30' maximum), equipment greaser (grease truck), guard rail post driver operator, highline cableway signalman, hydra-hammer-aero stomper, power sweeper operator, roller operator (compacting), screed operator (asphalt or concrete), trenching machine operator (up to 6ft.), concrete cleaning decontamination machine operator, power concrete curing machine operator,

GROUP 5: Equipment Greaser (Grease Truck)

GROUP 6: Asphalt plant engineer, batch plant operator, bit sharpener, concrete joint machine operator (canal and similar type), concrete planer operator, deck engine operator, derrickman (oilfield type), drilling machine operator, bucket or auger types (Caldwell 100 bucket or similar types - Watson 1000 auger or similar types - Texoma 330, 500 or 600 auger or similar types - drilling depth of 45' maximum), drilling machine operator, hydrographic seeder machine operator (straw, pump or seed), Jackson track maintainer, or similar type, Kalamazoo switch tamper, or similar type, machine tool operator, Maginnis internal full slab vibrator, mechanical berm, curb or gutter (concrete or asphalt), mechanical finisher operator (concrete, Clary-Johnson-Bidwell or similar type), pavement breaker operator (truck mounted), road oil mixing machine operator, roller operator (asphalt or finish), rubber - tired earth moving equipment (single engine, up to and including 25 yds. struck), self-propelled tar pipelining machine operator, skiploader operator (crawler and wheel type, over 3/4 yd. and up to and

including 1-1/2 yds.), slip form pump operator (power driven hydraulic lifting device for concrete forms), tractor operator - bulldozer, tamper-scraper (single engine, up to 100 h.p. flywheel and similar types, up to and including D-5 and similar types), tugger hoist operator

GROUP 7: Asphalt or concrete spreading operator (tamping or finishing), asphalt paving machine operator (Barber Greene or similar type - 1 screedman required), Asphalt -rubber distributor operator, backhoe operator (up to and including 3/4 yd.), small Ford, Case or similar, cast-in-place pipe laying machine operator, combination mixer and compressor operator (gunite work), compactor operator (self-propelled), concrete mixer operator (paving), crushing plant operator, drill doctor, drilling machine operator, bucket or auger types (Caldwell 150 bucket or similar types - Watson 1500, 2000 2500 auger or similar types - Texoma 700, 800 auger or similar types - drilling depth of 60' maximum), elevating grader operator, grade checker, gradall operator, grouting machine operator, heavy-duty repairman, kalamazoo ballast regulator or similar type, Kolman belt loader and similar type, Le Tourneau blob compactor or similar type, loader operator (Athey, Euclid, Sierra and similar types), pneumatic concrete placing machine operator (Hackley Presswell or similar type), pumpcrete operator, rotary drill operator (excluding caisson type), rubber-tired earth-moving equipment operator (single engine, Caterpillar, Euclid, Athey Wagon and similar types with any and all attachments over 25 yds. up to and including 50 cu. yds. struck), rubber-tired earth-moving equipment operator (multiple engine up to and including 25 yds. struck), rubber-tired scraper operator (self-loading paddle wheel type - John Deere, 1040 and similar single unit), self- propelled curb and gutter machine operator, skipload operator (crawler and wheel type over 1-1/2 yds. up to and including 6-1/2 yds.), surface heaters and planer operator, tractor compressor drill combination operator, tractor operator (any type larger than D-5 - 100 flywheel h.p. and over, or similar - bulldozer, tamper, scraper and push tractor single engine), tractor operator (boom attachments), traveling pipe wrapping, cleaning and bending machine operator, trenching machine operator (over 6 ft. depth capacity, oiler required)

GROUP 8: Heavy duty repairman

GROUP 9: Drilling machine operator, bucket or auger types (Caldwell 200 B bucket or similar types - Watson 3000 or 5000 auger or similar types - Texoma 900 auger or similar types - drilling depth of 105' maximum), dual drum mixer, monorail locomotive operator (diesel, gas or electric), motor patrol - blade operator (single engine), multiple engine tractor operator (Euclid and similar type - except Quad 9 cat.), rubber-tired earth-moving equipment operator (single engine, over 50 yds. struck), rubber-tired earth-moving equipment operator (multiple engine, Euclid, Caterpillar and similar over 25 yds. and up to 50 yds.), tower crane repair person, tractor loader operator (crawler and wheel type over 6-1/2 yds.), Woods mixer operator (and similar pugmill equipment)

GROUP 10: Dynamic compactor LDC350 (or similar types

GROUP 11: Auto grader operator, automatic slip form operator, drilling machine operator, bucket or auger types (Caldwell, auger 20 CA or similar types - Watson auger 6000 or similar

types - drilling depth of 175' maximum), hoe ram or similar with compressor, mass excavator operator, mechanical finishing machine operator, mobile form traveler operator, motor patrol operator (multi-engine), pipe mobile machine operator, rubber-tired earth-moving equipment operator (multiple engine, Euclid, Caterpillar and similar type, over 50 cu. yds. struck), rubber-tired self-loading scraper operator (paddle-wheel-auger type self-loading - two (2) or more units)

GROUP 12: Rubber-tired earth-moving equipment operator operating equipment with push-pull system (single engine, up to and including 25 yds. struck)

GROUP 13: Canal liner operator, canal trimmer operator, remote control earth-moving equipment operator, wheel excavator operator

GROUP 14: Rubber-tired earth-moving equipment operator, operating equipment with push-pull system (single engine, Caterpillar, Euclid, Athey Wagon and similar types with any and all attachments over 25 yds. and up to and including 50 yds. struck), rubber-tired earth-moving equipment operator, operating equipment with push-pull system (multiple engine - up to and including 25 yds. struck)

GROUP 15: Rubber-tired earth-moving equipment operator, operating equipment with push-pull system (single engine, over 50 yds. struck), rubber-tired earth-moving equipment operator, operating equipment with push-pull system (multiple engine, Euclid, Caterpillar and similar, over 25 yds. and up to 50 yds. struck)

GROUP 16: Rubber-tired earth-moving equipment operator, operating equipment with push-pull system (multiple engine, Euclid, Caterpillar and similar, over 50 cu. yds. struck), tandem tractor operator (operating crawler type tractors in tandem - Quad 9 and similar type)

GROUP 17: Rubber-tired earth-moving equipment operator, operating in tandem (scrapers, belly dumps and similar types in any combination, excluding compaction units - single engine, up to and including 25 yds. struck)

GROUP 18: Rotex concrete belt operator (or similar types), rubber-tired earth-moving equipment operator, operating in tandem (scrapers, belly dumps and similar types in any combination, including compaction units - single engine, Caterpillar, Euclid, Athey Wagon and similar types with any and all attachments over 25 yds. and up to and including 50 cu. yds. struck), rubber-tired earth-moving equipment operator, operating in tandem (scrapers, belly dumps and similar types in any combination, excluding compaction units - multiple engine, up to and including 25 yds. struck),

GROUP 19: Rubber-tired earth-moving equipment operator, operating in tandem (scrapers, belly dumps and similar types in any combination, excluding compaction units - single engine, over 50 yds. struck), rubber-tired earth moving equipment operator, operating in tandem (scrapers, belly dumps and similar types in any combination, excluding compaction units - multiple engine, euclid, caterpillar and similar over 25 yds. and up to 50 yds. struck)

GROUP 20: Rubber-tired earth-moving equipment operator, operating in tandem (scrapers, belly dumps and similar types in any combination, excluding compaction units - multiple engine,

Euclid, Caterpillar and similar type, over 50 cu. yds. struck)
GROUP 21: Rubber-tired earth-moving equipment operator, operating equipment with the tandem push-pull system (single engine, up to and including 25 yds. struck)
GROUP 22: Rubber-tired earth-moving equipment operator, operating equipment with the tandem push-pull system (single engine, Caterpillar, Euclid, Athey Wagon and similar types with any and all attachments over 25 yds. and up to and including 50 yds. struck), rubber-tired earth-moving equipment operator, operating with the tandem push-pull system (multiple engine, up to and including 25 yds. struck)
GROUP 23: Rubber-tired earth-moving equipment operator, operating equipment with the tandem push-pull system (single engine, over 50 yds. struck), rubber-tired earth-moving equipment operator, operating equipment with the tandem push-pull system (multiple engine, Euclid, Caterpillar and similar, over 25 yds. and up to 50 yds. struck)
GROUP 24: Concrete pump operator - truck mounted (oiler required when boom over 105' or 36 meters), rubber-tired earth-moving equipment operator, operating equipment with the tandem push-pull system (multiple engine, Euclid, Caterpillar and similar type, over 50 cu. yds. struck)
CRANES, PILEDRIVING AND HOISTING EQUIPMENT CLASSIFICATIONS:
GROUP 1: Engineer oiler; Fork lift operator (under 5 tons capacity)
GROUP 2: Truck crane oiler
GROUP 3: A-frame or winch truck operator; Ross carrier operator (jobsite)
GROUP 4: Bridge-type unloader and turntable operator; Helicopter hoist operator
GROUP 5: Stinger crane (Austin-Western or similar type); Tugger hoist operator (1 drum)
GROUP 6: Bridge crane operator; Cretor crane operator; Fork lift operator (over 5 tons); Hoist operator (Chicago boom and similar type); Lift mobile operator; Lift slab machine operator (Vagtborg and similar types); Material hoist operator; Shovel, backhoe, dragline, clamshell operator (over 3/4 yd. and up to 5 cu. yds. mrc); Tugger hoist operator
GROUP 7: Pedestal crane operator; Shovel, backhoe, dragline, clamshell operator (over 5 cu. yds. mrc); Tower crane repair; Tugger hoist operator (3 drum)
GROUP 8: Crane operator (up to and including 25 ton capacity); Crawler transporter operator; Derrick barge operator (up to and including 25 ton capacity); Hoist operator, stiff legs, Guyderrick or similar type (up to and including 25 ton capacity); Shovel, backhoe, dragline, clamshell operator (over 7 cu. yds. mrc)
GROUP 9: Crane operator (over 25 tons and up to and including 50 tons mrc); Derrick barge operator (over 25 tons up to and including 50 tons mrc); Highline cableway operator; Hoist operator, stiff legs, Guy derrick or similar type (over 25 tons up to and including 50 tons mrc); K-crane operator; Polar crane operator; Tower crane operator
GROUP 10: Crane operator (over 50 tons and up to and including 100 tons mrc); Derrick barge operator (over 50 tons up to and including 100 tons mrc); Hoist operator, stiff legs, Guy derrick or similar type (over 50 tons up to and including 100

tons mrc)

GROUP 11: Crane operator (over 100 tons and up to and including 200 tons mrc); Derrick barge operator (over 100 tons up toand including 200 tons mrc); Hoist operator, stiff legs, Guy derrick or similar type (over 100 tons up to and including 200 tons mrc); Mobile tower crane operator (over 100 tons up to and including 200 tons mrc)

GROUP 12: Crane operator (over 200 tons up to and including 300 tons mrc); Derrick barge operator (over 200 tons up to and including 300 tons mrc); Hoist operator, stiff legs, Guy derrick or similar type (over 200 tons, up to and including 300 tons mrc); Mobile tower crane operator (over 200 tons, up to and including 300 tons mrc)

GROUP 13: Crane operator (over 300 tons); Derrick barge operator (over 300 tons); Helicopter pilot; Hoist operator, stiff legs, Guy derrick or similar type (over 300 tons); Mobile tower crane operator (over 300 tons)

TUNNEL CLASSIFICATIONS

GROUP 1: Skiploader (wheel type up to 3/4 yd. without attachment)

GROUP 2: Power-driven jumbo form setter operator

GROUP 3: Dinkey locomotive or motorman (up to and including 10 tons)

GROUP 4: Bit sharpener; Equipment greaser (grease truck); Slip form pump operator (power-driven hydraulic lifting device for concrete forms); Tugger hoist operator (1 drum); Tunnel locomotive operator (over 10 and up to and including 30 tons); Welder - general

GROUP 5: Backhoe operator (up to and including 3/4 yd.); Small Ford, Case or similar; Drill doctor; Grouting machine operator; Heading shield operator; Heavy-duty repairperson; Loader operator (Athey, Euclid, Sierra and similar types); Mucking machine operator (1/4 yd., rubber-tired, rail or track type); Pneumatic concrete placing machine operator (Hackley-Presswell or similar type); Pneumatic heading shield (tunnel); Pumpcrete gun operator; Tractor compressor drill combination operator; Tugger hoist operator (2 drum); Tunnel locomotive operator (over 30 tons)

GROUP 6: Heavy duty repairman - welder combination

GROUP 7: Tunnel mole boring machine operator

ENGI9993D 07/01/2000

	Rates	Fringes
CHURCHILL, DOUGLAS, ELKO, EUREKA, HUMBOLDT, LANDER, LYON, MINERAL, PERSHING, STOREY, WASHOE, WHITE PINE AND CARSON CITY		
POWER EQUIPMENT OPERATORS		
(Except Piledriving and Steel Erection)		
AREA 1:		
Group 1a	25.33	8.21
Group 2	25.86	8.21
Group 3	26.13	8.21
Group 4	26.87	8.21
Group 5	27.17	8.21
Group 6	27.34	8.21
Group 7	27.59	8.21
Group 8	28.18	8.21

Group 9	28.50	8.21
Group 10	28.85	8.21
Group 10a	29.04	8.21
Group 11	29.28	8.21
Group 11a	30.92	8.21
Group 11b	31.73	8.21
PILEDRIVING		
AREA 1:		
Group 1	37.32	8.21
Group 1a	31.38	8.21
Group 1b	29.46	8.21
Group 2	35.80	8.21
Group 2a	31.17	8.21
Group 2b	29.26	8.21
Group 3	34.35	8.21
Group 3a	30.95	8.21
GROUP 3b	29.03	8.21
Group 4	32.84	8.21
Group 5	31.73	8.21
Group 6	30.62	8.21
Group 7	29.66	8.21
Group 8	27.80	8.21
STEEL ERECTION		
AREA 1:		
Group 1	37.87	8.21
Group 1a	31.70	8.21
Group 1b	29.74	8.21
Group 2	36.36	8.21
Group 2a	31.45	8.21
Group 2b	29.53	8.21
Group 3	35.12	8.21
Group 3a	31.23	8.21
Group 3b	29.31	8.21
Group 3c	34.76	8.21
Group 4	33.39	8.21
Group 5	32.29	8.21

POWER EQUIPMENT OPERATOR CLASSIFICATIONS
CHURCHILL, DOUGLAS, ELKO, EUREKA, HUMBOLDT, LANDER, LYON, MINERAL, PERSHING, STOREY, WASHOE, WHITE PINE, CARSON CITY
(EXCLUDING PILEDRIVING AND STEEL ERECTION)

GROUP 1a: Oiler; Partsman (heavy duty repair shop partsroom when needed).

GROUP 2: Compressor; Material Loader and/or Conveyor (handling building materials); Pump Operator

GROUP 3: Bobcat or similar loader (1/4 cu. yd. or less); Concrete Curing Machines (streets, highways, airports, canals); Conveyor belt operator(tunnel); Forklift (under 20 ft.); Engineer Generating plant (500 K.W.); Mixer box operator (concrete plant); Motorman; Rotomist Operator; Screedman (except asphaltic or concrete paving); Oiler (truck crane)

GROUP 4: Concrete mixer, skip type; Dinky; Forklift (20' and over) or Lumber stacker; Ross Carrier; Skip Loader (under 1 cu. yd); Tie Spacer.

GROUP 5: Concrete mixer (over 1 cu. yd); concrete pumps or pumpcrete guns; Elevator and material Hoist (1 drum); Groundman for Asphalt Milling and similar.

GROUP 6: Auger type drilling equipment up to and including 30

ft. depth digging capacity m.r.c.; Boom Truck or Dual Purpose "A" Frame Truck; B.L.H. Lima road pactor or similar; Chip box spreader (flaherty type or similar); Concrete batch plant (wet or dry); Concrete saws (highways, streets, airports, canals); Locomotive (over 30 tons); Lubrication and service engineer (mobile & grease rack); Maginnis international full slab vibrator (airports, highways, canals, warehouses); Mechanical finishers (concrete)(clary, Johnson, Bidwell Bridge Deck or similar types); Mechanical Burn, Curb and/or Curb and Gutter Machine (concrete or asphalt); Pavement breaker, truck mounted, with compressor combination; Pavement breaker or tamper (with or without compressor (combination); Power Jumbo (setting slip-forms, etc. in tunnels); Roller (except asphalt); Self-propelled tape machine; Self-propelled compactor (single engine); Self-propelled power sweeper; slip form pump (power-driven by hydraulic, electric, air, gas, etc. lifting device for concrete forms); Small Rubber-tired Tractors; Snooper Crane, Paxton-Mitchell or similar; Stationary Pipe Wrapping, Cleaning and Bending Machine Operator

GROUP 7: Auger type drilling equipment over 30 ft. depth digging capacity m.r.c.; Compressor (over 2); Concrete conveyor or concrete pump, truck equipment mounted (boom length to apply); Concrete conveyor, building site; Drilling and boring Machinery, vertical and horizontal (not to apply to waterliners, wagon drills or jackhammers); Crusher Plant Engineer; Generators; Kolman Loader; Material Hoist (2 or more drums); Mechanical finishers or spreader machine (asphalt, Barber-Greene and similar); (Screedman required); Mine or shaft hoist; Pipe bending machines (pipelines only); Pipe cleaning machines (tractor propelled and supported); Pipe wrapping machines (tractor propelled and supported); Portable crushing and screening plants; Post driller and/or driver; Pumps (over 2); Roller operator (asphalt); Screedman (except asphaltic or concrete paving; Screedman (Barber-Green and similar)(Aspaltic or concrete paving); Self-propelled boom-type lifting device (center amount) (on 10 ton capacity or less); Slusher; Soil tester (certified); Soils and material tester; Surface heater and planer; Trenching machine (maxiumum digging capacity 3 feet depth); Truck type loader; Welding machines (gasoline or diesel.

GROUP 8: Asphalt plant Engineer; Asphalt milling machine; Cast-in-place pipe laying machine; Combination slusher and motor op.; Concrete batch plant (multiple units); Dozer Operator; Drill doctor; Elevating grader; Gradesetter, Grade checker; Grooving and grinding machine (highway); Heavy duty repairman and/or welder; Ken-seal; Loader (up to and including 2 1/2 cu. yds.); Mechanical trench shield; Mixermobile; Push cats; Road oil mixing machine (wood-mixer and other similar pugmill equipment); Rubber-tired earth-moving equipment (up to and including 35 cu. yds."struck" M.R.C. Euclid, T-pulls, DW's 10, 20, 21, and similar); Self-propelled compactor with dozer; Hyster 450 or cat 825 or similar; Sheepfoot; Small tractor (with boom); Soil stabilizer (P & H or equal); Timber skidder (rubber-tired and/or similar equipment); Tractor-drawn scraper; Tractor; Tractor-mounted compressor drill combination; Trenching machine (over 3 feet depth); Tri-batch paver; Tunnel badger or tunnel boring machine; Tunnel mole boring machine; Vermeer T-600b rock cutter.

GROUP 9: Chicago boom; Combination backhoe and loader (up to and including 3/8 yard); Combination mixer and compressor (gunite); Lull hi-lift (20 feet or over); Mucking machine; Sub-grader (gurries or other types); Tractor (with boom) (D6 or larger); Track-laying-type earthmoving machine (single engine with tandem scrapers).
GROUP 10: Boom-type backfillng machine; Bridge crane; Carylift or similar; Chemical grouting machine; Derricks (two (2) Group 10 operators required when swing engine remote from hoist); Derrick barges (except excavation work); Euclid loader and similar types; Heavy-Duty rotary drill rigs; Lift-slab (vagtborg and similar types); Loader (over 2 1/2 cu yds. up to and including 4 cu. yds); Locomotive (over 100 tons) (single or multiple units); Multiple-Engine earth-moving machines (euclid, dozers, etc.); Pre-stress wire-wrapping machine; Rubber-tried scraper, self-loading; Single-engine scraper (over 35 cu. yds); Shuttle car (reclaim station); Train loading station; Trenching machine multi-engine with sloping attachment (jefco or similar); Vacuum cooling plant; Whirley crane (up to and including 25 tons).
GROUP 10a: Backhoe (up to and including 1 cu. yd hydraulic); Backhoe (up to and including 1 cu. yd. cable); CMI dual lane auto -grader SP30 or similar; Cranes (not over twenty five (25) tons (hammerhead and gantry); Finish Blade; Gradalls (up to and including 1 cu. yd); Motor patrol; Power shovels, Clamshells, Draglines, Cranes (up to and including 1 cu. yd.); Rubber-tried scraper, self-loading (twin-engine); Self-propelled boom-type lifting device (center mount) (over 10 tons up to and including 25 tons).
GROUP 11: Automatic asphalt or concrete slip-form paver; Automatic railroad car dumper; Canal trimmer; Cary lift, campbell or similar; Cranes (over 25 tons); Euclid loader when controled from the pullcat; Highline cableway operator; Loader (over 4 cu yds. up to and including 12 cu. yds.); Multi-Engine earthmoving equipment (up to and including 75 cu. yds. "struck M.R.C); Multi ple Engine Scrapers (when used to push pull); Power shovels, Clam-shells, Draglines, Backhoes, Gradealls (over 1 cu. yd. and up to and including 7 cu. yds. M.R.C.); Self-propelled Boom type lifting device (over 25 tons M.R.C.); Self-propelled Compactor (with multiplepropulsion power units); Single-engine rubber-tried earthmoving machine (with tandem scraper); Slip-form paver (concrete or asphalt)(one (1) Operator and two (2) screedman); Tandem cats and scrapers; Tower crane mobile (including rail-mounted); Truck-mounted hydraulic crane when remote-control equipped (over 10 tons up to and including 25 tons); Universal Liebher and tower cranes (and similar types)(in the erection, dismantling and moving of equipment there shall be an additional operating engineer at group 8 rates); Wheel excavator (up to and including 750 cu. yds. per hour); Whirley cranes (over 25 tons).
GROUP 11a: Band wagons (in conjuction with wheel excavators); Operator of helicopter (when used in construction work); Loaders (over 12 cu. yds.); Multi-engine earthmoving equimpent (over 75 cu. yds. "struck" M.R.C.); Power shovels, Clamshells, Draglines, Backhoes and Gradalls (over 7 cu. yds. M.R.C.); Remote-controlled Earthmoving equipment; Wheel excavator (over 750 cu. yds. per hour)(two (2) Group 11A operators required).
GROUP 11b: Holland loader or similar or loader (over 18 cu. yds)

PILEDRIVING CLASSIFICATIONS

GROUP 1: Derrick barge pedestal mounted over 100 tons; Clam shells over 7 cu. yds.; Self propelled boom type lifting device over 100 tons; Truck crane or crawler, land or barge mounted over 100 tons;
GROUP 1a: Truck crane oiler.
GROUP 1b: Oiler
GROUP 2: Derrick barge pedestal mounted 45 tons up to and including 100 tons; Clamshells up to and including 7 cu. yds; Self propelled boom type lifting device over 45 tons; Truck crane or crawler, land or barge mounted over 45 tons up to and including 100 tons.
GROUP 2a: Truck crane oiler.
GROUP 2b: Oiler
GROUP 3: Derrick barge pedestal mounted under 45 tons; self propelled boom type lifting device 45 tons and under; Skid/Scow Piledriver, any tonnage; (any assistance required shall be by an employee covered by this agreement); Truck crane or crawler, land or barge mounted 45 tons and under.
GROUP 3a: Truck Crane oiler
GROUP 3b: Oiler
GROUP 4: Forklift, 10 tons and over
GROUP 5: No current classification.
GROUP 6: Deck engineer
GROUP 7: No current classification
GROUP 8: Deckhand, Fireman

STEEL ERECTORS AND FABRICATORS

GROUP 1: Cranes, over 100 tons; Derrick over 100 tons, Self propelled boom type lifting devices over 100 tons.
GROUP 1a: Truck crane oiler.
GROUP 1b: Oiler
GROUP 2: Cranes, over 45 tons up to and including 100 tons; Derrick 100 tons and under, Self-propelled boom type lifting device, over 45 tons; Tower Crane.
GROUP 2a: Truck crane oiler.
GROUP 2b: Oiler
GROUP 3: Cranes, 45 tons and under; Self propelled boom type lifting device, 45 tons and under
GROUP 3a: Truck crane oiler
GROUP 3b: Hydraulic
GROUP 3c: Oiler
GROUP 4: Chicago boom; Forklift, 10 tons and over; Heavy Duty Repairman/Welder.
GROUP 5: Boom cat

AREA DEFININITIONS AND PAY RATES

AREA 1:
ALL AREA FALLING WITHIN 50 ROAD MILES OF EITHER THE CARSON CITY COURTHOUSE OR THE WASHOE COUNTY COURHOUSE SHALL BE CONSIDERED FREE AREA.

AREA 2:
ALL WORK FALLING BETWEEN 50 AND 150 ROAD MILES OF THE WASHOE COUNTY COURTHOUSE SHALL BE COMPUTED AT AN ADDITIONAL $1.50 PER HOUR ABOVE THE BASE RATE.

AREA 3:
ALL WORK FALLING BETWEEN 150 AND 300 ROAD MILES OF THE WASHOE COUNTY COURTHOUSE SHALL BE COMPUTED AT AN ADDITIONAL $2.00 PER HOUR ABOVE THE BASE RATE.

AREA 4:

ANY WORK PERFORMED IN EXCESS OF 300 ROAD MILES OF THE WASHOE COURTHOUSE SHALL BE COMPUTED AT AN ADDITIONAL $3.00 PER HOUR ABOVE THE BASE RATE.

ENGI9993K 07/01/1997

	Rates	Fringes
CHURCHILL, DOUGLAS, ELKO, EUREKA, HUMBOLDT, LANDER, LYON, MINERAL, PERSHING, STOREY, WASHOE, WHITE PINE AND CARSON CITY		
HYDRAULIC SUCTION & CLAMSHELL & DIPPER DREDGE		
GROUP 1:		
Area 1	31.04	11.89
Area 2	33.04	11.89
GROUP 2:		
Area 1	26.08	11.89
Area 2	28.08	11.89
GROUP 3:		
Area 1	24.96	11.89
Area 2	26.96	11.89

DREDGING CLASSIFICATIONS

GROUP 1:
Day Mate (Captain); Leverman/Operator

GROUP 2:
Booster Pump Operator, Deck Engineer, Deck Mate, Dredge Dozer; Dredge Tender; Heavy Duty Repairman; Watch Engineer; Winchman

GROUP 3:
Bargeman; Deckhand; Fireman; Leveehand; Oiler

AREA DEFININITIONS

AREA 1:
ALL AREA FALLING WITHIN 50 ROAD MILES OF EITHER THE CARSON CITY COURTHOUSE OR THE WASHOE COUNTY COURHOUSE SHALL BE CONSIDERED FREE AREA.

AREA 2:
ALL WORK FALLING BETWEEN 50 AND 150 ROAD MILES OF THE WASHOE COUNTY COURTHOUSE.

AREA 3:
ALL WORK FALLING BETWEEN 150 AND 300 ROAD MILES OF THE WASHOE COUNTY COURTHOUSE.

AREA 4:
ANY WORK PERFORMED IN EXCESS OF 300 ROAD MILES OF THE WASHOE COURTHOUSE.

IRON0027J 07/01/2001

	Rates	Fringes
ELKO, EUREKA, AND WHITE PINE COUNTIES		
IRON WORKERS:		
Fence Erectors: Machinery Movers		
Ornamental: Reinforcing. Rigger		
Structural	25.19	14.575

IRON0155B 07/01/2001

	Rates	Fringes
CHURCHILL, CLARK, DOUGLAS, ESMERALDA, HUMBOLDT, LANDER, LINCOLN, LYON, MINERAL, NYE, PERSHING, STOREY, WASHOE, AND WHITE PINE COUNTIES		
IRONWORKERS:		
STRUCTURAL, ORNAMENTAL		

AND REINFORCING	26.08	14.575
FENCE ERECTORS (Excluding Clark County)	25.19	14.575

LABO0169F 10/01/2001

	Rates	Fringes
CHURCHILL, DOUGLAS, ELKO, EUREKA, HUMBOLDT, LANDER, LYON, MINERAL, PERSHING, STOREY, WASHOE, WHITE PINE, CARSON CITY		
Group 1	19.15	5.12
Group 1-A	16.28	5.12
Group 2	19.25	5.12
Group 3	19.40	5.12
Group 4	19.65	5.12
Group 5	19.95	5.12
Group 6	19.95	5.12
Group 7	19.65	5.12
Group 8	19.30	5.12
Group 9	13.99	5.12

From the Washoe County Courthouse
50 Miles to 150 Miles - add $1.50 per hour to wage rates
150 Miles to 300 Miles - $2.00 per hour to wage rates
Over 300 Miles - add $3.00 per hour to wage rates

CLASSIFICATIONS

GROUP 1: All cleanup work of debris, grounds and building including windows and tile; dump or spotter (other than asphalt); general laborers; limber, brushloader and piler

GROUP 1-A: Flagmen

GROUP 2: Choker setter or rigger (clearing work only); Pittsburgh chipper and similar type brush shredders; concrete worker (wet or dry) all concrete work not listed in Group 3; crusher or grizzle tender; Guinea chaser (stake); panel forms (wood or metal) handling, cleaning and stripping of; loading and unloading of all rods and materials for reinforcing concrete; railroad track (builders); sloper; semi-skilled wrecker (salvaging of building materials other than those listed in Group 3).

GROUP 3: Asphalt workers (ironers, shoveler, cutting machine); buggymobile; chainsaw, faller, logloader and bucker; compactor (all types); concrete mixer, under 1/2 yd.; concrete pan work (breadpan type) (handling, cleaning, stripping); concrete saw, chipping, grinding, sanding, vibrator; cribbing, shoring, lagging, trench jacking, hand-guided lagging hammer; curbing or divider machine; curb setter (precast or cut); Ditching machine (hand-guided); driller's tender, chuck tender; form raiser, slip forms; grouting of concrete walls, windows and door jams; headerboard; jackhammer, pavement breaker, air spade; mastic worker (wet or dry); pipe wrapper, kettle, pot, and workers applying asphalt, Creosote and similar type materials; all power tools (air, gas or electric); post driver; riprap stonepaver and rock slinger, including placing of sack concrete, wet or dry; roto tiller; rigging and signaling in connection with laborers work, sandblaster, pot men; vibrascreed; skilled wrecker (removing and salvaging of sash windows, doors, plumbing and electrical; fixtures)

GROUP 4: Burning and welding in connection with laborers' work; joy drill model TWM-2A, gardener denver model DN 143 and similar type drills; track drillers, diamond core drillers, wagon

drillers, mechanical drillers on multiple units; high scalers; concrete pump; heavy duty vibrator with stinger 5" diameter or over; pipelayer, caulker and bander; pipelayer - waterline, sewerline, gasline, conduit; asphalt rakers
GROUP 5: Blaster and powder, all work of loading, placing and blasting of all powder and explosive of any type, regardless of method used used for such loading and placing; asbestos removal; lead abatement, hazardous waste and material removal.
GROUP 6: Nozzlemen, Rodman
GROUP 7: Gunmen, Materialmen
GROUP 8: Reboundmen
GROUP 9: Landscaper

LABO0872D 07/01/2000

	Rates	Fringes
CLARK, ESMERALDA, AND LINCOLN COUNTIES; NYE COUNTY (South half, including Highway #6)		
LABORERS:		
Group 1	21.58	7.46
Group 2	21.74	7.46
Group 3	21.84	7.46
Group 4	21.93	7.46
Group 5	22.02	7.46
Group 6	21.84	7.46
Group 7	18.53	7.46

30 - 50 Miles From City Hall, Las Vegas $1.50 above the base rate.

50 - 70 Miles From City Hall, Las Vegas $2.50 above the base rate.

Over 70 Miles From City Hall, Las Vegas $3.00 above the base rate.

Laughlin Area $2.25 above the base rate.

LABORER CLASSIFICATIONS

Group 1: Dry Packing of concrete and filling of form-bolt holes; fine grader, highway and street paving, airport runaways and similar type heavy construction; gas and oil pipeline laborer; guinea chaser; laborer, general; construction or demolition laborer; packing rod steel and pans; laborers; temporary water lines (portable type); landscape gardener and nursery worker (must have knowledge of plant materials and how to plant them lay out plant arrangements to-follow the landscape plan); tarman and mortarman; kettleman; potman and worker applying asphalt lay-kold creosote, lime and similar type materials ("applying" means applying, dipping, brushing or handling of such materials

for pipe wrapping and waterproofing); underground laborer, including caisson bellowers; window cleaner; scafford erector - (excludes tenders); fence erector - chain link; mortarless, barrier wall and/or retaining walls; mechanical stabilized earth wall; landscape decorative rock installer - ponds, water fall etc.; material handler - (incidental to trade).

Group 2: Asphalt raker, ironer, spreader, Luteman, buggymobile man; cement dumper (on 1 yard or larger mixers and handling bulk cement); cesspool digger and installer; chucktender (except tunnels); concrete core cutter; concrete curer, impervious membrane and oiler of all materials; concrete saw, excluding tractor type, cutting, scoring old or new concrete; gas and oil pipeline wrapper, pot tender and form; making and caulking of all non metallic pipe joints; operators and tenders of pneumatic and electric tools, vibrating machines, hand-propelled trenching machines, impact wrench, multiplate and similar mechanical tools not separately classified herein; operator of cement grinding machine; riprap stonepaver; roto-scraper; sandblaster (pot tender); scaler; septic tank digger and installer; tank scaler and cleaner; tree climber, faller, chain saw operator, pittsburgh chipper and similar type brush shredders

Group 3: Cutting torch operator; gas and oil pipeline wrapper; gas and oil pipeline laborer, certified; jackhammer and/or pavement breaker, laying of all non-metallic pipe, including landscape sprinklers, sewerpipe, drain pipe, and underground tile; mudcutter; concrete vibrator, all sizes; rock slinger; scaler (using Bos'n chair or safety belt or power tools); forklift (incidental to trade) a journeyman shall hold OSHA certification at time of referral.

Group 4: Cribber or shorer, lagging, sheeting, trenching bracing hand guided lagging hammer; head rock slinger; powder- blaster, all work of loading holes, placing and blasting of all powder and explosives of whatever type, regardless of method used for such loading and placing; sandblaster (nozzle operator); steel headerboard

Group 5: Driller (core, diamond or wagon); joy driller model TW M-2a, Gardener-Denver Model DH 143 and similar type drills (in accordance with memorandum of understanding between laborers and operating engineers dated Miami, Florida, February 3, 1954); Gas and oil pipeline fusion; gas and oil pipeline wrappers, 6" pipe and over-

Group 6: Environmental specialist (asbestos abatement, lead abatement, Hazardous waste abatement, petro-chemical abate ment, radiation remediation.

Group 7: Flag and Signal Person

LABO0872I 07/01/1999

	Rates	Fringes
CLARK, ESMERALDA, AND LINCOLN COUNTIES; NYE COUNTY (South half, including Highway #6)		
LABORERS:		
MINER AND BULLGANG		
Group 1	23.07	7.48
Group 2	22.57	7.48

Group 3	22.32	7.48
Group 4	22.93	7.48
Group 5	22.57	7.48

30 - 50 Miles From City Hall, Las Vegas $1.50 above the base rate.

50 - 70 Miles From City Hall, Las Vegas $2.50 above the base rate.

Over 70 Miles From City Hall, Las Vegas $3.00 above the base rate.

Laughlin Area $2.25 above the base rate.

CLASSIFICATIONS

Group 1: Shaft, Raise, Stope Miner

Group 2: Miner - Tunnel (Hardrock)

Group 3: BullGang, Mucker, Trackman

Group 4: Miner - Welder

Group 5: Pipe Jacking, Micro-Tunneling, Tunnel Boring Machine

---

* PAIN0159F 07/01/2001

CLARK, ESMERALDA, LINCOLN AND NYE COUNTIES

PAINTERS:	Rates	Fringes
Brush, Roller, Paperhangers, Spray, Sandblasters, Pot Tender, Nozzleman, Tapers, Marbleizing, Metal Leafing Sign Painters, Acid Staining, Graining and Buffing	25.62	7.34
Structural Steel Paint and Sandblasting, Buffing Steel	26.02	7.34
Special Coating	25.62	7.34
Steeplejack	27.42	7.34

PAIN0567E 10/01/2001

CARSON CITY, CHURCHILL, DOUGLAS, ELKO, EUREKA, HUMBOLDT, LANDER, LYON, MINERAL, PERSHING, STOREY, WASHOE AND WHITE PINE COUNTIES

PAINTERS:	Rates	Fringes
Brush and Roller	20.53	5.06
Spray; Paperhangers; and Sandblaster; Special Coatings Application - Brush	21.03	5.06

Structural Steel (not to include stairways, tube steel, Q-decks & trust joints worked off powered lift in enclosed building); Steeplejack Brush/ Spray over 40 feet with open space below; Special Coatings Application - Spray	21.53	5.06
Special Coatings Application - Spray Steel	21.78	5.06
Drywall Taper	22.08	5.06
Steeplejack - Taper, over 40 ft. with open space	23.58	5.06

PLAS0241G 10/01/1997

	Rates	Fringes
CHURCHILL, DOUGLAS, ELKO, ESMERALDA, EUREKA, HUMBOLDT, LANDER, LYON, MINERAL, PERSHING, STOREY, WASHOE, AND WHITE PINE COUNTIES		
CEMENT MASONS		
Cement Masons	17.02	7.10
Mastic. magesite and all composition masons	17.27	7.10

PLAS0797G 07/01/2001

	Rates	Fringes
CLARK, ESMERALDA, LINCOLN AND NYE COUNTIES		
CEMENT MASONS:		
0 to 30 Miles from City Hall in Las Vegas	25.88	6.95
30 to 50 Miles from City Hall in Las Vegas	27.38	6.95
50 to 70 Miles from City Hall in Las Vegas	28.38	6.95
Over 70 Miles from City Hall in Las Vegas	29.38	6.95

PLUM0350G 08/01/2001

	Rates	Fringes
CHURCHILL, DOUGLAS, ELKO, EUREKA, HUMBOLDT, LANDER, LYON, MINERAL, PERSHING, STOREY, WASHOE, WHITE PINE, CARSON CITY COUNTIES, and NYE COUNTY (North of Hwy. #6 including the City of Tonopah)		
PLUMBERS & PIPEFITTERS	28.15	6.25

PLUM0525G 06/01/2001

	Rates	Fringes
CLARK, ESMERALDA AND LINCOLN, COUNTIES; NYE COUNTY (South of Hwy. #6 including the City of Tonopah)		
PLUMBERS & PIPEFITTERS	30.01	10.61

ROOF0162D 03/01/1999

	Rates	Fringes
ROOFERS	17.78	3.17

SHEE0026C 07/01/2001

	Rates	Fringes
CHURCHILL, DOUGLAS, ELKO, EUREKA, HUMBOLDT, LANDER, LYON, MINERAL, PERSHING, STOREY, WASHOE, CARSON CITY AND NYE COUNTY (North of the First Standard Parallel Line north of the 38th Parallel)		
SHEET METAL WORKERS	25.83	8.77

SHEE0088H 07/01/2001

	Rates	Fringes
CLARK, ESMERALDA, AND LINCOLN COUNTIES; NYE COUNTY (South of the First Standard Parallel Line north of the 38th Parallel); WHITE PINE COUNTY		
SHEET METAL WORKERS	32.22	8.58

TEAM0533A 01/01/1998

	Rates	Fringes
REMAINING COUNTIES AND NYE COUNTY (North of and including highwAY #6)		
TRUCK DRIVERS		
All dump trucks (Single or multiple dump units including Semi's and Double and Transfer units:		
Under 4 yards (water level)		
4 yards and under 8 yards (water level)	16.62	7.40
3 yards & under 18 yards (water level)	16.84	7.40
3 yards & under 25 yards (water level)	17.05	7.40
25 yards & under 60 yards (water level)	17.64	7.40

60 yards & under 75 yards (water level)	19.08	7.40
75 yards & under 100 yards (water level)	19.82	7.40
100 yards & over (water level)	20.50	7.40
150 yards & under 250 yards	22.50	7.40
250 yards & under 350 yards	25.50	7.40
Over 350 yards	27.00	7.40

(Men regularly employed underground on tunnel work shall be paid forty-five ($.45) cents per hour for such work, provided that such employment underground on tunnel work continues for one (1) or more hours)

Bulk cement spreader (with or with or without Auger) Use dump truck scales.

Bootman (a bootman when employed on such equipment shall receive the rate specified for the classification of road oil trucks or bootman).

Transit Mix, Manufactures Rating:

Under 8 yards	17.05	7.40
8 yards & including 12 yards	17.16	7.40
Over 12 yards	17.38	7.40

Transit Mix with boom shall receive $.12-1/2 cents per hour above the appropriate yardage classification rate of pay when such boom is used.

Water Trucks:

Up to 2,500 gallons	16.84	7.40
2,500 gallons & over	17.05	7.40

Jetting truck (use appropriate water truck rate.

DW20's and 21's and other

similar cat type, Terra cobra, Le Tourneau pulls, Tournerocker, Euclid and similar type equipment when pulling Aqua/pak, Water tank trailers and fuel and/or Grease Tank trailer or other miscellaneous trailers (except as definded under dump trucks.	17.33	7.40
Heavy Duty Transport (High bed)	17.22	7.40
Heavy Duty Transport (Gooseneck Low Bed)	17.22	7.40
Tiltbed or Flatbed Pull Trailers	17.22	7.40
Bootman, combination bootman and road oiler	17.11	7.40
Flat Rack (2 or 3 axle unit)	14.94	7.40
Bus and Manhaul drivers:		
Up to 18,000 lbs. (single unit)	16.67	7.40
18,000 lbs & over (single unit)	16.78	7.40
Helicopter Pilot (when transporting men or materials)	30.66	7.40
Industrial Lift truck (use appropriate flat rack rate (mechanical tailgate)		
Lift Jitneys & Fork Lift	16.89	7.40
Winch Truck & "A" Frame Drivers:		
Under 18,000 lbs.	16.78	7.40
18,000 lbs. & over	16.89	7.40
Warehouse Spotters	16.23	7.40
Teamsters Warehouse Clerk	16.84	7.40
Tire Repairman	16.55	7.40
Truck Repairman	17.05	7.40
Pick-up Truck & Pilot Cars (Job Site)	14.74	7.40
Pick-up Truck & Pilot Car (over the road)	16.73	7.40
Truck Oil and Greaser	16.78	7.40

Fuel Truck Driver	16.78	7.40
Fuel Man & Fuel Island Man	16.78	7.40

When on grease and fuel truck, an Engineer Oil and Teamster Oil, work interchangeable servicing trucks and other equipment, The wage rate shall be identical.

AREA 1: All that area falling within fifty (50) road miles of either the Carson City or Washoe County Courthouse shall be considerer a free area.

AREA 2: All work falling between fifty (50) and (150) road miles of the Washoe County Courthouse shall be computed at and additional $1.50 per hour.

AREA 3: All work falling between one hundred and fifty (150) and three hundred (300) road miles of the Washoe County Courthouse shall be computed at additional $2.00 per hour.

AREA 4: Any work performed in excess of three hundred (300) road miles of the Washoe County Courthouse shall be computed at $3.00 per hour.

TEAM0631A 07/01/1999

CLARK, ESMERALDA, LINCOLN COUNTIES AND NYE COUNTY (South of and excluding Highway #6)

	Rates	Fringes
TRUCK DRIVERS:		
GROUP 1:	21.35	7.12
GROUP 2:	21.46	7.12
GROUP 3:	21.67	7.12
GROUP 4:	21.85	7.12
GROUP 5:	22.00	7.12
GROUP 6:	22.35	7.12

30 - 50 Miles from City Hall, Las Vegas $1.00 above the base rate.
50 - 70 Miles from City Hall, Las Vegas $2.00 above the base rate.
70 - 80 Miles from City Hall, Las Vegas $3.00 above the base rate.
Over 80 Miles from City Hall, Las Vegas $3.50 above the base rate.
Laughlin and Mesquite Areas, $3.00 above the base rate.

Group 1: Dump trucks (less than 12 yards water level); trucks (legal payload capacity less than 15 tons); water and fuel trucks (under 2500 gallons); pickups; service; drivers of busses (on jobsite used for transportation of up to 25 passengers); teamster equipment (highest rate for dual craft operation); working flat rack driver.

Group 2: Dump trucks (12 yards but less than 16 yards water level); trucks (legal payload capacity between 15 and 20 tons); transit mix trucks (under 3 yds.; dumpcrete trucks (less than 6-1/2 yds. water level); gas and oil pipeline working truck drivers; including winch truck and all sizes of trucks; water and fuel truck drivers (2,500 gallon to 4,000 gallon); truck greaser; drivers of busses (on jobsite used for transportation of more than twenty-five (25) passengers); warehouse clerk.

Group 3: Dump trucks (16 yds. up to and including 22 yds. water level); driver of trucks (legal payload cap. 20 tons but less than 30 tons); dumpster trucks; drivers of transit-mix trucks (3 yds. but less than 6 yds.); dumpcrete trucks (6-1/2 yds. water level and over); fork lift driver; ross carrier driver; highway water and fuel drivers (4,000 gallons but less than 6,000 gallons); stock room clerk; tireman

Group 4: Transit-mix trucks (6 yds. or more); dump trucks (over 22 yds. water level); trucks (legal payload capacity 30 tons and over); fuel and water trucks (6,000 gallons and over).

Group 5: Drivers of trucks and trailers in combination (seven axles or more).

Group 6: All offroad equipment; truck repairmen and drivers of road oil spreader trucks; D.W. 10 and D.W. 20 euclid-type equipment, letourneau pulls, terra cobras and similar types of equipment; also PB and similar-type trucks when performing work within Teamsters' jurisidiction, regardless of types of attachment inlcuding power unit pulling off highway belly dumps in tandem.

WELDERS - Receive rate prescribed for craft performing operation to which welding is incidental.

==========

Unlisted classifications needed for work not included within the scope of the classifications listed may be added after award only as provided in the labor standards contract clauses (29 CFR 5.5(a)(1)(v)).

In the listing above, the "SU" designation means that rates listed under that identifier do not reflect collectively bargained wage and fringe benefit rates. Other designations indicate unions whose rates have been determined to be prevailing.

WAGE DETERMINATION APPEALS PROCESS

1.) Has there been an initial decision in the matter? This can be:

* an existing published wage determination
* a survey underlying a wage determination
* a Wage and Hour Division letter setting forth a position on a wage determination matter
* a conformance (additional classification and rate) ruling

On survey related matters, initial contact, including requests for summaries of surveys, should be with the Wage and Hour Regional Office for the area in which the survey was conducted because those Regional Offices have responsibility for the Davis-Bacon survey program. If the response from this initial contact is not satisfactory, then the process described in 2.) and 3.) should be followed.

With regard to any other matter not yet ripe for the formal process described here, initial contact should be with the Branch of Construction Wage Determinations. Write to:

Branch of Construction Wage Determinations
Wage and Hour Division
U. S. Department of Labor
200 Constitution Avenue, N. W.
Washington, D. C. 20210

2.) If the answer to the question in 1.) is yes, then an interested party (those affected by the action) can request review and reconsideration from the Wage and Hour Administrator (See 29 CFR Part 1.8 and 29 CFR Part 7). Write to:

Wage and Hour Administrator
U.S. Department of Labor
200 Constitution Avenue, N. W.
Washington, D. C. 20210

The request should be accompanied by a full statement of the interested party's position and by any information (wage payment data, project description, area practice material, etc.) that the requestor considers relevant to the issue.

3.) If the decision of the Administrator is not favorable, an interested party may appeal directly to the Administrative Review Board (formerly the Wage Appeals Board). Write to:

Administrative Review Board
U. S. Department of Labor
200 Constitution Avenue, N. W.
Washington, D. C. 20210

4.) All decisions by the Administrative Review Board are final.

END OF GENERAL DECISION

SECTION TABLE OF CONTENTS

DIVISION 01 - GENERAL REQUIREMENTS

SECTION 01200

GENERAL REQUIREMENTS

PART 1 GENERAL

1.1 REFERENCES
1.2 PROJECT FACILITIES
1.2.1 Construction Signs
1.2.2 Bulletin Board
1.2.3 Sanitary Facilities

PART 2 PRODUCTS

2.1 CONSTRUCTION SIGNS
2.1.1 Materials
2.1.1.1 Lumber
2.1.1.2 Plywood
2.1.1.3 Bolts, Nuts and Nails
2.1.1.4 Paints and Oils

PART 3 EXECUTION

3.1 CONSTRUCTION OF SIGNS
3.1.1 Project and Hard Hat Signs
3.1.2 Warning Signs
3.2 PAINTING SIGNS
3.3 PROJECT ENGINEER'S OFFICE EQUIPMENT
3.4 BULLETIN BOARD
3.5 MAINTENANCE AND DISPOSAL OF PROJECT FACILITIES
3.6 SCRAP MATERIAL
3.7 ARCHAEOLOGICAL FINDINGS DURING CONSTRUCTION
3.8 PROTECTION OF EXISTING WORK
3.9 PUBLIC UTILITIES, NOTICES, AND RESTRICTIONS
3.9.1 General
3.9.2 Relocation or Removal
3.9.3 Utilities Not Shown
3.9.4 Coordination
3.9.5 Notices
3.9.5.1 Utilities To be Relocated or Protected
3.9.5.2 Bench Marks and R/W Markers
3.9.5.3 ENVIRONMENTAL ASSESSMENT REQUIREMENT
3.9.5.4 Spill Reporting
3.9.6 Restrictions
3.9.6.1 Other Agency Representatives
3.9.6.2 Traffic Control Plan
3.9.6.3 Existing Roads

3.9.6.4 Access and Haul Roads
3.9.6.5 Public and Private Roads
3.9.6.6 Maintenance of Roads
3.9.6.7 Traffic Safety
3.9.6.8 Rock and Gravel
3.9.6.9 Cooperation with Others
3.9.7 Working Hours
3.9.8 Construction Water
3.9.9 Identification of Vehicles
3.9.10 Construction Method Observation
3.9.11 Contractor's Equipment
3.10 PUBLIC SAFETY
3.11 OCCUPATIONAL SAFETY AND HEALTH ACT (OSHA) STANDARDS
3.11.1 Accident Reporting
3.12 PERMITS
3.12.1 General
3.12.2 Air Pollution Permit (APP)
3.12.3 National Pollutant Discharge Elimination System (NPDES) Permit
3.13 CONTRACTOR SAFETY PERSONNEL REQUIREMENT
3.13.1 General
3.13.2 Qualifications for Safety and Health Professional(s)
3.13.3 Qualification for Safety and Health Technicians
3.13.4 Names and Duties
3.14 NOTICE OF PARTNERSHIP
3.15 TIME EXTENSIONS FOR UNUSUALLY SEVERE WEATHER (ER 415-1-15, 31 OCT 89)
3.16 REQUIRED INSURANCE
3.17 SPECIAL CONSTRUCTION REQUIREMENTS
3.17.1 Project Limits
3.17.2 Existing Roads
3.17.2.1 Beltway (South Bound Frontage Road), Fort Apache, Grand Canyon Drive, Hualapai Way
3.17.3 Coordination with Other Contractors
3.17.3.1 North and South of F-1 Channel, Hualapai Way to Beltway, and Sienna Community
3.17.4 Runoff F-1 Channel, Hualapai Way to Beltway
3.17.4.1 Runoff Side Drains
3.17.5 Hualapai Way, Grand Canyon Drive and Fort Apache Road Construction Access for Others
3.17.6 Excess Material From Multi-Use Trail
3.17.7 Existing Gas Lines
3.17.8 Coordination for Utilities
3.17.9 Coordination with Planned Sewer Lines

-- End of Section Table of Contents --

SECTION 01200

GENERAL REQUIREMENTS

PART 1 GENERAL

1.1 REFERENCES

The publications listed below form a part of this specification to the extent referenced. The publications are referred to in the text by basic designation only.

ASME INTERNATIONAL (ASME)

ASME B18.2.1	(1996) Square and Hex Bolts and Screws (Inch Series)
ASME B18.2.2	(1987; R 1993) Square and Hex Nuts (Inch Series)

COMMERCIAL ITEM DESCRIPTIONS (CID)

CID A-A-2246	(Rev B) Paint, Latex
CID A-A-2336	(Rev A) Primer Coating (Alkyd, Exterior Wood, White and Tints)

DEPARTMENT OF COMMERCE (DOC)

DOC PS 1	(1996) Voluntary Product Standard - Construction and Industrial Plywood

ENGINEERING MANUALS (EM)

COE EM 385-1-1	(1996) Safety and Health Requirements Manual

NATIONAL INSTITUTE OF STANDARDS AND TECHNOLOGY (NIST)

NIST PS 20	(1994; Addenda Jan. 1997) American Softwood Lumbar Standards

1.2 PROJECT FACILITIES

The Contractor shall construct and/or erect the following project facilities as soon as possible and not less than 15 calendar days after notice to proceed.

1.2.1 Construction Signs

The signs shall include the following:

a. Project Signs: One Project Sign at location designated by the Contracting Officer.

b. Warning Signs: Facing approaching traffic on all haul roads crossing under overhead power transmission lines.

c. Hard Hat Signs: Ten hard hat signs at locations directed.

1.2.2 Bulletin Board

Bulletin board shall be erected at the Contractor's office.

1.2.3 Sanitary Facilities

Suitable sanitary facilities shall be provided and maintained by the Contractor.

PART 2 PRODUCTS

2.1 CONSTRUCTION SIGNS

2.1.1 Materials

2.1.1.1 Lumber

NIST PS 20, and shall be seasoned Douglas Fir, S4S, Grade D or better except that posts, braces and spacers shall be construction Grade (WCLB).

2.1.1.2 Plywood

DOC PS 1, grade A-C, Group 1, exterior type.

2.1.1.3 Bolts, Nuts and Nails

Bolts shall conform to ASME B18.2.1, nuts shall conform to ASME B18.2.2, and nails shall conform to commercially available supplies.

2.1.1.4 Paints and Oils

Paints shall conform to CID A-A-2336 for primer and CID A-A-2246 for finish paint and lettering.

PART 3 EXECUTION

3.1 CONSTRUCTION OF SIGNS

3.1.1 Project and Hard Hat Signs

Constructed as detailed in Figures 1,2,3 and Safety Signs. Decals signs will be furnished by the Contracting Officer.

3.1.2 Warning Signs

Constructed of plywood not less than 13 mm thick and shall be securely bolted to the supports with the bottom of the sign face 1 m above the ground. The sign face shall be 0.60 m x 1.20 m, all letters shall be 100 mm in height, and the wording shall be: "WARNING: OVERHEAD TRANSMISSION LINES."

3.2 PAINTING SIGNS

All exposed surfaces and edges of plywood shall be given one coat of linseed oil and be wiped prior to applying primer. All exposed surfaces of signs and supports shall be given one coat of primer and 2 finish coats of white paint. Except as otherwise indicated, lettering on all signs shall be black and sized as indicated.

3.3 PROJECT ENGINEER'S OFFICE EQUIPMENT

Contractor shall provide computer software (3.5" floppy disc size) to the Contracting Officer for the type of scheduling system to be used and quantity/fill programs for tracking or estimating bid quantities during construction. Scheduling software must be capable of downloading completely to the COE Standard Data Exchange Format. The Contractor shall utilize a hand held radio system for communication between the Contractor's quality control representative and the Government's quality assurance representative. Radio equipment for the Government's use shall include a hand held radio, two batteries and one charger. The Contractor shall provide Government personnel with the following equipment for the duration of the contract: 1 Cellular telephone with voice mail, 2 nickel cadmium batteries, 1 desk top charger, 1 travel charger, and 400 minutes of air time per month or portion thereof.

3.4 BULLETIN BOARD

A weatherproof bulletin board, approximately 915 mm wide and 760 mm high, with hinged glass door shall be provided adjacent to or mounted on the Contractor's project office. If adjacent to the office, the bulletin board shall be securely mounted on no less than 2 posts. Bulletin board and posts shall be painted or have other approved factory finish. The bulletin board shall be easily accessible at all times and shall contain wage rates, equal opportunity notice, and such other items required to be posted.

3.5 MAINTENANCE AND DISPOSAL OF PROJECT FACILITIES

The Contractor shall maintain the project facilities in good condition throughout the life of the project. Upon completion of work under this contract, the facilities covered under this section will remain the property of the Contractor and shall be removed from the site at his expense.

3.6 SCRAP MATERIAL

Materials indicated to be removed and not indicated to be salvaged, stored or reinstalled are designated as scrap and shall become the property of the Contractor and be removed from the site of work. The Contractor by signing

this contract hereby acknowledges that he made due allowance for value, if any, of such scrap in the contract price.

3.7 ARCHAEOLOGICAL FINDINGS DURING CONSTRUCTION

Should the Contractor or any of his employees in the performance of this contract find or uncover any archaeological remains, he shall notify the Project Engineer immediately. Such notifications will be a brief statement in writing giving the location and nature of the findings. Should the discovery site require archaeological studies resulting in delays and/or additional work, the Contractor will be compensated by an equitable adjustment under the CONTRACT CLAUSES of the contract.

3.8 PROTECTION OF EXISTING WORK

Before beginning any cutting or removal work, the Contractor shall carefully survey the existing work and examine the drawings and specifications to determine the extent of the work. The Contractor shall take all necessary precautions to insure against damage to such work to remain in place, to be reused, or to remain the property of the Government, and any damage to such work shall be repaired or replaced as approved by the Contracting Officer at no additional cost to the Government. The Contractor shall carefully coordinate the work of this section with all other work and construct and maintain shoring, bracing and supports, as required. The Contractor shall insure that structural elements are not overloaded and be responsible for increasing structural supports or adding new supports as may be required as a result of any cutting, removal, or demolition work performed under any part of this contract.

3.9 PUBLIC UTILITIES, NOTICES, AND RESTRICTIONS

3.9.1 General

The approximate location of all railroads, pipelines, power and communication lines, and other utilities known to exist within the limits of the work are indicated on the drawings. The sizes, locations, and names of owners of such utilities are given from available information, but their accuracy is not guaranteed. Except as otherwise indicated on the drawings, all existing utilities will be left in place and the Contractor shall conduct his operations in such a manner that the utilities will be protected from damage at all times, or arrangements shall be made by the Contractor for their relocation at the Contractor's own expense. The Contractor shall be responsible for any damage to utilities known to exist and shall reimburse the owners for such damage caused by his operations.

3.9.2 Relocation or Removal

Utilities to be relocated or removed not as part of this contract are designated "To be Relocated by Others" or "To be Removed by Others", respectively. Utilities shown on the plans and not so designated will be left in place and be subject to the provisions of the CONTRACT CLAUSE: PROTECTION OF EXISTING VEGETATION, STRUCTURES, UTILITIES, AND IMPROVEMENTS. The Contractor may make arrangements with the owner for the temporary relocation and restoration of utilities not designated to be relocated, or

for additional work in excess of the work needed to relocate utilities designated for relocation at no additional cost to the Government.

3.9.3 Utilities Not Shown

If the Contractor encounters, within the construction limits of the entire project, utilities not shown on the plans and not visible as of the date of this contract and if such utilities will interfere with construction operations, he shall immediately notify the Contracting Officer in writing to enable a determination by the Contracting Officer as to the necessity for removal or relocation. If such utilities are left in place, removed or relocated, as directed by the Contracting Officer, the Contractor shall be entitled to an equitable adjustment for any additional work or delay.

3.9.4 Coordination

The Contractor shall consult and cooperate with the owner of utilities that are to be relocated or removed by others to establish a mutual performance schedule and to enable coordination of such work with the construction work. These consultations shall be held as soon as possible after award of the contract or sufficiently in advance of anticipated interference with construction operations to provide required time for the removal or relocation of affected utilities.

3.9.5 Notices

3.9.5.1 Utilities To be Relocated or Protected

Unless otherwise specified, the Contractor shall notify the Contracting Officer, in writing, 14 calendar days prior to starting work on any utility to be relocated or protected. On each relocation, notification shall include dates on which the Contractor plans excavation, by-pass work, removal work and/or installation work, as applicable. The Contractor shall also notify the following representatives of utility owners not less than 7 days prior to the start of work in the vicinity of their respective utilities.

Mr. Bucky Faulkner
Clark County Sanitation District
5857 E. Flamingo Road
Las Vegas, NV
Telephone: (702)434-6601

Mr. Tom Carden
Southwest Gas Corporation
4300 W. Tropicana Avenue
Las Vegas Nevada
(702)365-2180
Underground Service Alert
(800)227-2600

Ms. Kimberly Granath-Musil
Cox Communications
121 S. Martin L. King Blvd.

Las Vegas, NV 89106
(702)384-8084, ext 356

Mr. Dean Whitman
US Sprint
3300 S. Valley View Boulevard
Las Vegas, NV 89152
(702)244-7808

Ms. Tina Furlong
Nevada Power Company
6770 W. Flamingo Road
Las Vegas, NV 89151
(702)252-4815

3.9.5.2 Bench Marks and R/W Markers

The Contractor shall notify the Contracting Officer, in writing, 7 days in advance of the time he proposes to remove any existing bench mark or right-of-way marker.

3.9.5.3 ENVIRONMENTAL ASSESSMENT REQUIREMENT

In order to satisfy the Environmental Assessment for this project, the Contracting Officer is required to have a qualified biologist on site at all times while clearing and grubbing operations are in progress. The Contractor shall notify the Contracting Officer 14 calendar days prior to the start of clearing and grubbing activities so that a biological monitor shall be required to walk immediately in front of the Contractors' clearing and grubbing equipment to survey for the threatened desert tortoise and state protected and BLM sensitive Gila monster. For scheduling purposes, the Contractor shall coordinate and complete all clearing and grubbing activities within one four-workday period.

3.9.5.4 Spill Reporting

The Contractor shall notify the Contracting Officer immediately after any spill, regardless of quantity, including all personnel exposures. The Contractor shall submit a written notification not later than 7 calendar days after the initial notification. The written notification shall include the following:

a. Item spilled, leaked or releases in an unauthorized manner (Identification, Quantity and Manifest Numbers).

b. Whether the amount spilled, leaked or released in an unauthorized manner is EPA reportable and, if reported, a copy of the report.

c. Exact location of the spill, leak or unauthorized release.

d. Nature of exposure to personnel.

e. Containment procedures initiated.

f. Anticipated cleanup and disposal procedure.

g. Disposal location of spill, leak or unauthorized release residue.

3.9.6 Restrictions

3.9.6.1 Other Agency Representatives

Personnel representing owners and other agencies may be present for various portions of the work. However, the Contractor will be responsible only to the Contracting Officer.

3.9.6.2 Traffic Control Plan

The Contractor shall develop a Traffic Control Plan and obtain an approval from the Clark County Department of Public Works prior to construction. The plan shall include details of truck haul routes.

3.9.6.3 Existing Roads

The construction schedule shall be prepared giving full consideration to maintaining traffic on existing roads. Additional work on the existing roads may be performed by others during the life of this contract.

3.9.6.4 Access and Haul Roads

Access and haul roads shall be proposed so that use of existing residential streets are minimized.

3.9.6.5 Public and Private Roads

When it is necessary to operate on existing roads outside the construction area, all necessary permits shall be obtained from the appropriate private or public authority. Work shall be conducted in such manner so as to obstruct and inconvenience traffic on existing roads outside the construction limits as little as possible. Spillage of earth, dusty materials, boulders, and mud on project roads or other road will not be permitted. If spillage cannot be prevented, the spillage shall be immediately removed and such areas shall be kept clear throughout the workday. At the conclusion of each workday, such traveled areas shall be cleared of spillage, boulders, and mud.

3.9.6.6 Maintenance of Roads

All haul and access roads, within the construction area, including the borrow areas, shall be maintained to provide vehicular access for the Government's vehicles and the Contractor's vehicles and equipment. Road maintenance shall include rock/mud slides, washouts, and any incident which would restrict vehicular/equipment access. Prior to any alterations of any road alignment, the Contractor shall receive an approval from the Contracting Officer. Road maintenance and alterations shall be performed by the Contractor at no additional cost to the Government.

3.9.6.7 Traffic Safety

In accordance with CONTRACT CLAUSE: ACCIDENT PREVENTION, signs, barricades, and warning devices shall be provided, installed, and maintained as are required for protection of vehicular traffic at any location where operations interfere with public roads. Signs, barricades, lights, and signals, shall be in conformance with Part VI of the U.S. Department of Transportation Manual on Uniform Traffic Control Devices for Streets and Highways.

3.9.6.8 Rock and Gravel

Rock and gravel for use on haul roads and other facilities may be obtained from any source within the excavation limits, borrow area, or stockpiles, that are within the project boundaries and are not designated for other use. The use of any such source shall be subject to approval by the Contracting Officer.

3.9.6.9 Cooperation with Others

The Contractor shall coordinate his activities and cooperate with other contractors as to not delay or interfere with their work.

3.9.7 Working Hours

The Contractor shall restrict all construction activities to the following schedule:

Monday thru Friday 6:30 a.m. to 7 p.m.
Saturday 8 a.m. to 7 p.m.

No work will be permitted on Sundays or Federal Holidays without the prior written approval from the Contracting Officer.

Disposal area(s) and haul route(s) utilized by the Contractor may require restricted hauling hours. The Contractor is notified that hauling or disposal activities may be restricted to normal business hours (7 a.m. to 4 p.m. in the event that such operations are considered to be disruptive to existing neighborhood safety and noise conditions. In the event that such a situation develops, the Contracting Officer shall notify the Contractor of restrictive hauling and/or disposal times. The Contractor shall develop their schedule for construction so that restrictive hauling times can be absorbed without extending the overall contract completion period.

3.9.8 Construction Water

The Contractor shall be responsible for obtaining water for construction purposes. The Contractor shall be responsible for obtaining approvals from the Las Vegas Valley Water District (LVVWD) and for coordination with other projects in the area.

3.9.9 Identification of Vehicles

All the Contractor's vehicles shall display suitable permanent identification.

3.9.10 Construction Method Observation

Any construction method, plant, or piece of equipment used on this contract shall not be considered proprietary, and can be inspected or photographed at any time by the Government, regulatory agencies, or any group approved by the Government.

3.9.11 Contractor's Equipment

The planned method of transportation and operation of cranes and other heavy equipment to be used in the performance of this contract shall be submitted for approval by the Contracting Officer. The plan shall include the type, size, loadings of equipment, the proposed transportation routes, and work areas to be used on the project.

3.10 PUBLIC SAFETY

Attention is directed to the CONTRACT CLAUSE: PERMITS AND RESPONSIBILITIES. The Contractor shall provide temporary fencing, barricades, and/or guards, as required, to provide protection in the interest of public safety. Whenever the Contractor's operations create a condition hazardous to the public, he shall furnish at his own expense and without cost to the Government, such flagmen and guards as are necessary to give adequate warning to the public of any dangerous conditions to be encountered and he shall furnish, erect, or maintain such fences, barricades, lights, signs and other devices as are necessary to prevent accidents and avoid damage or injury to the public. Flagmen and guards, while on duty and assigned to give warning and safety devices shall conform to applicable city, county, and state requirements. Should the Contractor appear to be neglectful or negligent in furnishing adequate warning and protection measures, the Contracting Officer may direct attention to the existence of a hazard and the necessary warning and protective measures shall be furnished and installed by the Contractor without additional cost to the Government. Should the Contracting Officer point out the inadequacy of warning and protective measures, such action of the Contracting Officer shall not relieve the Contractor from any responsibility for public safety or abrogate his obligation to furnish and pay for those devices. The installation of any general illumination shall not relieve the Contractor of his responsibility for furnishing and maintaining any protective facility.

3.11 OCCUPATIONAL SAFETY AND HEALTH ACT (OSHA) STANDARDS

The OCCUPATIONAL SAFETY and HEALTH ACT (OSHA) STANDARDS for CONSTRUCTION (Title 29, Code of Federal Regulations Part 1926 as revised from time to time) and the Corps of Engineers "Safety and Health Requirements Manual", COE EM 385-1-1, are both applicable to this contract. The most stringent requirement of the two standards will be applicable.

3.11.1 Accident Reporting

In accordance with COE EM 385-1-1, the Contractor shall submit a written summary of worker's compensation claims which have been filled by worker's

in connection with work on the project. The summary shall be submitted at the time when the work is approximately 50 percent complete and at project completion. The summary shall include all subcontractors. The Contractor's and subcontractor's compensation insurance carrier shall certify that the summaries are "correct and true".

3.12 PERMITS

3.12.1 General

Reference is made to the article of the contract entitled "Permits and Responsibilities", which obligates the Contractor to obtain all required licenses and permits.

3.12.2 Air Pollution Permit (APP)

The Contractor shall obtain an APP from the Clark County Health Department. A copy of the permit shall be submitted to the Contracting Officer. For further information, contact Ms. Cynthia Mikes at telephone number (702) 383-1276.

3.12.3 National Pollutant Discharge Elimination System (NPDES) Permit

The Contractor shall obtain a NPDES permit from the United States Environmental Protection Agency (USEPA) under the Nation Wide Permit (NWP) program, which requires that a Storm Water Pollution Prevention Plan (SWPPP) shall be prepared and maintained on-site throughout the construction period. A copy of the plan shall be submitted to the Contracting Officer. In accordance with the NWP, a minimum of two (2) days prior to the start of construction activities, the Contractor shall submit a Notice of Intent (NOI) with fees to the Nevada Division of USEPA. The NOI shall be submitted on the standard EPA Form 3510-6 (8-92), and copies shall be provided to the Contracting Officer. For further information, contact Mr. Robb Saunders at telephone number (775) 687-4670.

3.13 CONTRACTOR SAFETY PERSONNEL REQUIREMENT

3.13.1 General

Full-time, on-site, safety coverage by Contractors shall be required at all times during this contract. The Contractor shall employ at the project site to cover all hours of work at least one Safety and Occupational Health Technician per shift, to manage the Contractor's accident prevention program. In addition, the Contractor shall have one Safety and Occupational Health Professional to manage the overall Safety program. The principal safety person (the Safety Professional) shall report to and work directly for the Contractors on-site top manager, higher level official, or corporate safety office. The Safety and Health staff shall have the authority to take immediate steps to correct unsafe or unhealthful conditions. The presence of a Safety and Health person will not abrogate safety responsibilities of other personnel. The Safety and Health person shall be assigned no other duties.

3.13.2 Qualifications for Safety and Health Professional(s)

a. Shall have a degree in engineering or safety in at least a four year program from an accredited school and in addition, shall have been engaged in safety and occupational health for at least two (2) years, no time being credited to these two (2) years unless at least fifty (50) percent of the time each year was devoted to safety and occupational health; or

b. Shall have legal registration as a Professional Engineer, Certified Safety Professional, or a Certified Safety Manager, and, in addition, shall have been engaged in safety and occupational health for at lease one (1) year, no time being credited to this one (1) year experience unless at least fifty (50) percent of the time was devoted to safety and occupational health; or

c. Shall have degree other than that specified in (a) above and in addition, shall have been engaged in safety and occupational health for at least three (3) years, no time being credited to these three (3) years unless at least fifth (5) percent of the time each year was devoted to safety and occupational health; or

d. In lieu of a degree, shall have been engaged in safety and occupational health for at least five (5) years, no time being credited to these five (5) years unless at least fifty (50) percent of the time each year was devoted to safety and occupational health.

e. First aid work is not creditable experience.

3.13.3 Qualification for Safety and Health Technicians

a. A bachelors degree in safety or an associated discipline and currently employed in a safety position; or

b. An associate degree in Safety or an associated discipline and currently experience in Safety, and currently employed in a safety position; or

c. Five years field experience in safety or an associated discipline and currently employed in a safety position.

d. First Aid work is not creditable experience.

3.13.4 Names and Duties

The name and qualifications of nominated safety persons shall be furnished to the Contracting Officer (in resume format) for acceptability. A functional description of duties shall be provided prior to the pre-work conference. In addition, a copy of a letter from an authorized official of the Contractor which describes the duties and authority of the safety professional, including delegating sufficient authority to stop work to immediately correct the unsafe or unhealthful conditions.

3.14 NOTICE OF PARTNERSHIP

The Government intends to encourage the foundation of a cohesive partnership with the Contractor and its subcontractors. This partnership will be structured to draw on the strengths of each organization to identify and achieve reciprocal goals. The objectives are effective and efficient contract performance and intended to achieve completion within budget, on schedule, and in accordance with plans and specifications. This partnership would be bilateral in makeup, and participation will be totally voluntary. Any cost associated with effectuating this partnership will be agreed to by both parties and will be shared equally with no change in contract price. To implement this partnership initiative it is anticipated that within 60 days of Notice to Proceed the Contractor's on-site project manager and the Government's Resident Engineer would attend a two day partnership development seminar/team building workshop together with the Contractor's key on-site staff and key Government personnel. Follow-up workshop of 1 to 2 days duration would be held periodically throughout the duration of the contract as agreed to by the Contractor and Government.

3.15 TIME EXTENSIONS FOR UNUSUALLY SEVERE WEATHER (ER 415-1-15, 31 OCT 89)

a. This provision specifies the procedure for determination of time extensions for unusually severe weather in accordance with the CONTRACT CLAUSE: DEFAULT (FIXED PRICE CONSTRUCTION). In order for the Contracting Officer to award a time extension under this clause, the following conditions must be satisfied:

(1) The weather experienced at the project site during the contract period must be found to be unusually severe, that is, more severe than the adverse weather anticipated for the project location during any given month.

(2) The unusually severe weather must actually cause a delay to the completion of the project. The delay must be beyond the control and without the fault or negligence of the Contractor.

b. The following schedule of monthly anticipated adverse weather delays is based on National Oceanic and Atmospheric Administration (NOAA) or similar data for the project location and will constitute the base line for monthly weather time evaluations. The Contractor's progress schedule must reflect these anticipated adverse weather delays in all weather dependent activities.

MONTHLY ANTICIPATED ADVERSE WEATHER DAYS
Work Days Based on five (5) Day Work Week

JAN	FEB	MAR	APR	MAY	JUN	JUL	AUG	SEP	OCT	NOV	DEC
6	2	2	1	1	0	2	2	1	1	1	3

c. Upon acknowledgment of the Notice to Proceed (NTP) and continuing throughout the contract, the Contractor will record on the daily CQC report, the occurrence of adverse weather and resultant impact to normally scheduled work. Actual adverse weather delay days must prevent work on critical activities for 50 percent or more of the Contractor's scheduled work day. The number of actual adverse weather

days shall include days impacted by actual adverse weather (even if adverse weather occurred in previous month), be calculated chronologically from the first to the last day of each month, and be recorded as full days. If the number of actual adverse weather delay days exceeds the number of days anticipated in subparagraph b, the Contracting Officer will convert any qualifying delays to calendar days, giving full consideration for equivalent fair weather work days, and issue a modification in accordance with the CONTRACT CLAUSE: DEFAULT (FIXED PRICE CONSTRUCTION).

3.16 REQUIRED INSURANCE

The Contractor shall procure and obtain during the entire period of his performance under this contract the following minimum insurance:

a. General Public Liability insurance for bodily injury and property damage with minimum limits of $1,000,000 combined single limit per occurrence and $1,000,000 annual aggregate for bodily injury to or death, personal injury and property damage.

b. Automobile Liability insurance for bodily injury and property damage with minimum limits of $1,000,000 combined single limit for each occurrence and $1,000,000 annual aggregate.

c. Either Workman's Compensation or Employer's Liability insurance with a minimum limit of $1,000,000.

In every case the insurance coverage shall amount to at least the limits stated above. However, where the Financial Responsibility Compulsory Insurance Law of the State in which the installation is located requires higher limits, the Automobile Liability Insurance Policy should provide coverage of at least those limits. County of Clark, a political subdivision of the state of Nevada, Clark County Regional Flood Control District, and Montgomery Watson shall be named as additional insured parties and all policies issued in performance of work under this contract.

The Contractor does hereby agree to indemnify, defend, and save harmless Clark County, Clark County Regional Flood Control District, U.S. Army Corps of Engineers and Montgomery Watson from loss, damage, liability, costs, or expense to the proportionate extent caused by the Contractor, his employees, agents, or consultants and/or consultants arising out of its performance of this contract, including, but not limited to the negligent acts, errors, omissions, or intentional misconduct of the Contractor, its employees, agents or consultants and/or subconsultants in connection with this contract.

Contractor further does hereby agree, as a precaution to the performance of any work under this contract and as a precaution to any obligation of Clark County to make any payment under this contract, to provide Clark County with a certificate and/or a certificate issued by the State Industrial Insurance System (SIIS) in accordance with Nevada Revised Statute 616.280.

Contractor agrees to maintain required workers compensation throughout the entire term of the contract. If Contractor does not maintain coverage

throughout the entire term of the contract, Contractor agrees that Owner may, at any time the coverage is not maintained by Contractor, order the Contractor to stop work, assess liquidated damages as defined herein, suspend the contract, or terminate the contract. For each six month period this contract is in effect, Contractor agrees, prior to the expiration of the six month period, make another written request to SIIS for the provisions of a certificate and notice of lapse in or nonpayment of coverage. If Contractor does not make the request or does not provide the certificate before the expiration of the six month period, Contractor agrees that owner may order the Contractor to stop work, suspend the contract or terminate the contract.

3.17 SPECIAL CONSTRUCTION REQUIREMENTS

The Contractor shall restrict his operation and adapt his construction schedule to accommodate the following:

3.17.1 Project Limits

The Contractor's work, employee parking, operations, staging, equipment assembly and maintenance, and other on-site activities shall be restricted to actual areas of construction within the Project Limits. The Project Limits of the F-1 Channel, Hualapai Way to Beltway, are indicated on the drawings, and constitute the maximum limits of the construction area available for Contractor's operations. The Project Limits are generally defined by the Right-of-Way (R/W) and adjoining Temporary Construction Easements (TCE) as shown on the plans, unless designated otherwise (either in the plans, in these Specifications or by the Contracting Officer).

The Contractor shall be solely responsible for obtaining agreements with and acquisition from adjacent land owners, when additional land or access points are required to supplement the Contractor's operations or staging needs. No appurtenances or other public access facilities (either temporary or permanent) shall be constructed beyond the Project Limits.

3.17.2 Existing Roads

3.17.2.1 Beltway (South Bound Frontage Road), Fort Apache, Grand Canyon Drive, Hualapai Way

The Contractor shall maintain public access along South Bound Frontage Road, Fort Apache, Grand Canyon Drive and Hualapai Way at all times during this contract. Signs and reflective barriers are to be used as required to allow safe passage.

3.17.3 Coordination with Other Contractors

3.17.3.1 North and South of F-1 Channel, Hualapai Way to Beltway, and Sienna Community

The Contractor is advised that communities North and South of the F-1 Channel, Hualapai Way to Beltway and the Sienna Community are currently under construction. Work to be performed under that contract consists of construction of golf course, subdivision, related utilities and connector

roads.

3.17.4 Runoff F-1 Channel, Hualapai Way to Beltway

The work areas for both the channel and basin will occur in areas that are subject to flowing waters as a result of rainfall. In addition, the channel work area is subject to flowing waters as a result of irrigation runoff and other construction related activities (new development). The F-1 Channel, Hualapai Way to Beltway Contractor is advised that it is their responsibility to protect their work from these probable events. In addition to these and other coordination issues discussed herein, see also specification Section 02230A "Diversion and Control of Water". See also paragraph National Pollution Discharge Elimination System (NPDES) Permit.

3.17.4.1 Runoff Side Drains

The F-1 Channel, Hualapai Way to Beltway Contractor shall anticipate storm (and nuisance) runoff coordination from side drains and at side drain locations along the F-1 Channel, Hualapai Way to Beltway. Some side drains and laterals are active while others will become active during the life of the F-1 Channel, Hualapai Way to Beltway project. The F-1 Channel, Hualapai Way to Beltway Contractor shall conduct construction activities with full coordination of these runoff waters and shall safely allow them to pass without inundating other areas of adjacent development. Drainage from side drains, laterals and all future side drain locations shall not be interrupted.Text

3.17.5 Hualapai Way, Grand Canyon Drive and Fort Apache Road Construction Access for Others

The Hualapai Way, Grand Canyon Drive and Fort Apache Road Crossings are required to have continuous construction access for others across the F-1 Channel, Hualapai Way to Beltway Channel alignment. The F-1 Channel, Hualapai Way to Beltway Contractor shall be required to construct the Hualapai Way, Grand Canyon Drive and Fort Apache Road Reinforced Concrete Boxes in two phases and ensure that the access is reconfigured during both phases so that traffic activities other than the F-1 Channel, Hualapai Way to Beltway project are not interrupted. Improvements for the permanent Hualapai Way, Grand Canyon Drive and Fort Apache Roads perpendicular to the F-1 Channel, Hualapai Way to Beltway, are anticipated to commence (by others) during the life of this contract. Any detours utilized by the F-1 Channel, Hualapai Way to Beltway Contractor shall provide means of passage through the Channel work area that include equivalent road surface requirements (for instance asphalt paving if applicable).

3.17.6 Excess Material From Multi-Use Trail

Excess excavated material originating from the construction of the F-1 Channel, Hualapai Way to Beltway project shall be disposed in the Russel Road Disposal Site. The F-1 Channel, Hualapai Way to Beltway Contractor is advised that Russell Road, the Beltway, and the roads next to the Russell Road disposal site are all currently active and open streets to the Public. Haul routes shall be coordinated through the development of traffic control plans submitted to and approved by Clark County Department of

Public Works.

3.17.7 Existing Gas Lines

Existing natural gas lines owned by Southwest Gas Corporation located in Hualapai Way and Grand Canyon Drive are in conflict with the F-1 Channel alignment and are required to be relocated. The existing polyethylene gas lines shall be relocated by Southwest Gas after the F-1 Channel Contractor has completed rough excavation at each area. The F-1 Channel Contractor shall temporarily support the existing gas lines during excavation and until Southwest gas has completed their relocation. In developing their construction schedule, the F-1 Channel Contractor shall allow Southwest Gas two weeks after completion of rough excavation to complete the required relocations. Advance notice of proposed scheduling for relocation work shall be provided by the F-1 Channel Contractor to Southwest Gas so that relocation activities may be completed within the desired time period.

3.17.8 Coordination for Utilities

During the life of the F-1 Channel contract, the F-1 Channel Contractor shall anticipate numerous coordination issues with utility owners at various locations along the F-1 Channel alignment. New utilities are required to support this rapidly developing area. Sprint, Nevada Power, Southwest Gas, Las Vegas Valley Water District, Cox Cable and the Clark County Sanitation District are among the utilities anticipated to be improved or added through this area. The F-1 Channel Contractor shall coordinate all F-1 Channel work with utility companies desiring access to the F-1 Channel ROW or TCE limits identified on the contract drawings. The F-1 Channel Contractor shall permit any utility or its delegated representative to enter into and use F-1 Channel ROW or TCE areas to complete utility work. The F-1 Channel ROW and TCE areas are not intended to be restricted for the sole use of the F-1 Channel Contractor.

3.17.9 Coordination with Planned Sewer Lines

Two new sewer lines are planned along the F-1 Channel and installation is anticipated to commence by 01 April 2002. These sewer lines cross under and run parallel to the F-1 Channel in areas between Station 18+00 and Station 14+80. The F-1 Channel Contractor shall plan and coordinate their construction activities accordingly to allow the installation of these two separate lines by others. The F-1 Channel work shall not damage or interrupt service to these sewers once completed. Manholes installed for these sewers shall be adjusted in elevation by the F-1 Channel Contractor to match finish grade elevations to include new concrete collars per Standard Clark County Drawings.

-- End of Section --

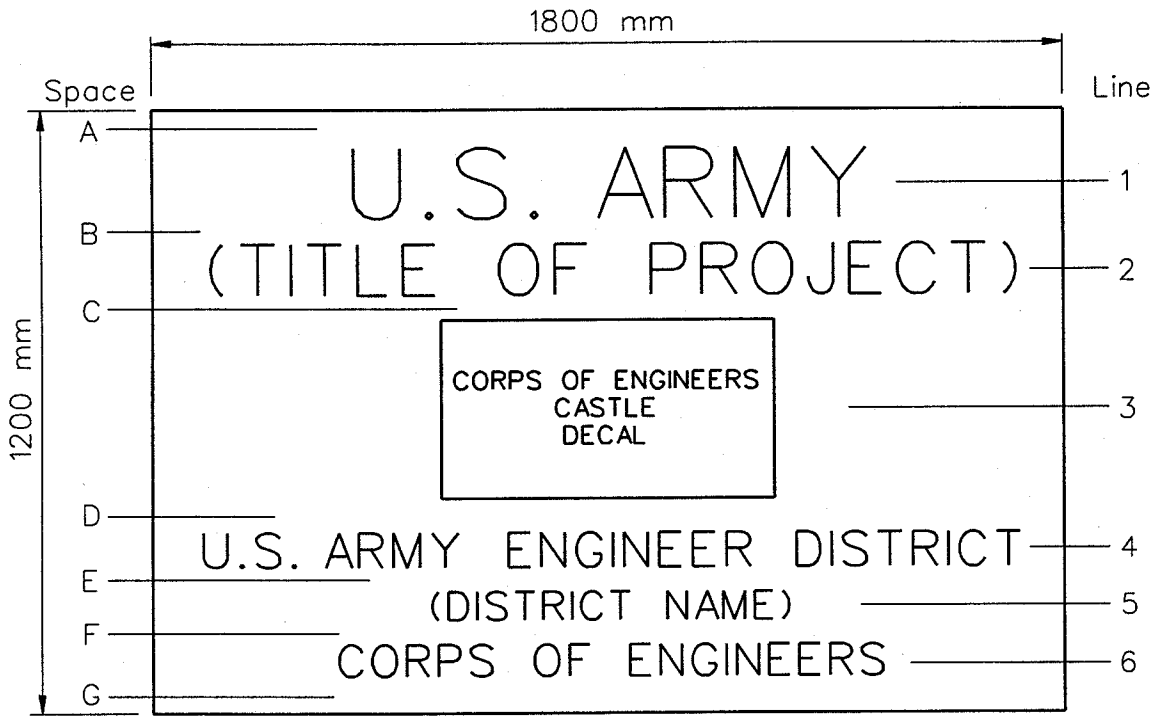

Space	Height	Line	Description	Letter Height	Stroke
A	75				
		1	U.S. ARMY	140	22
B	50				
		2	PROJECT NOMENCLATURE	100	16
C	50				
		3	CORPS OF ENGINEERS CASTLE (DECAL)	345	
D	70				
		4	U.S. ARMY ENGINEER DISTRICT	70	9
E	50				
		5	DISTRICT NAME	60	6
F	50				
		6	CORPS OF ENGINEERS	65	9
G	75				

Letter Color -- Black

PROJECT SIGN
(Army-Civil Works)

Figure 1
October 1996

All units are in millimeters.

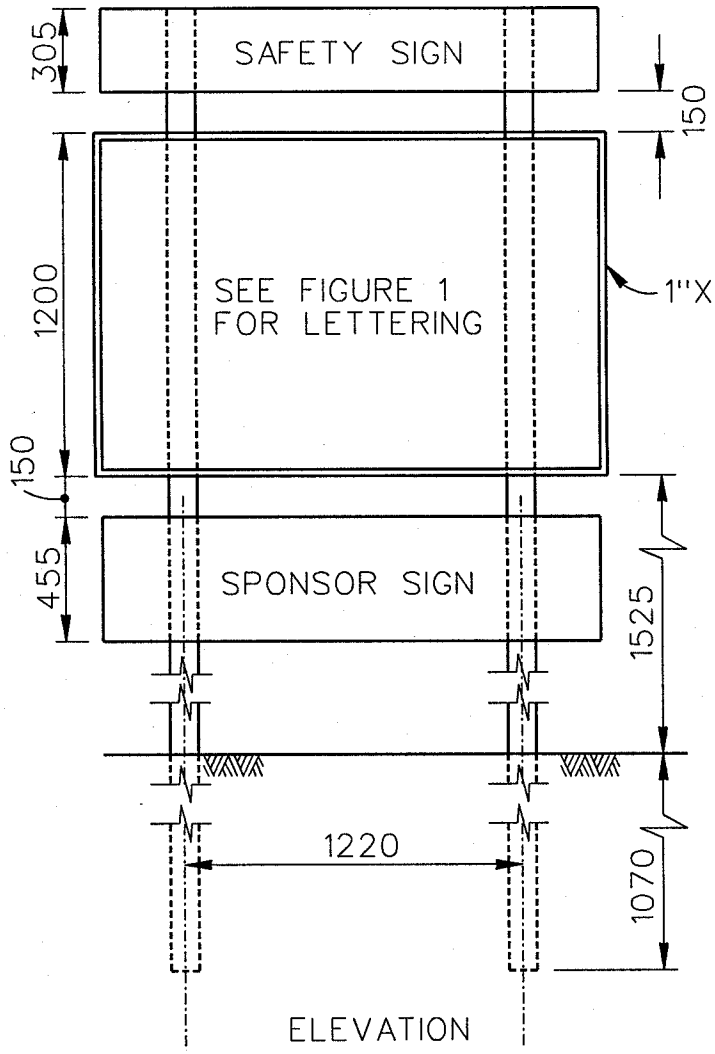

ELEVATION

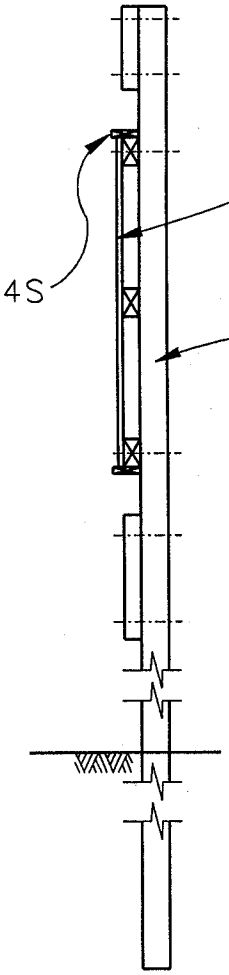

SECTION

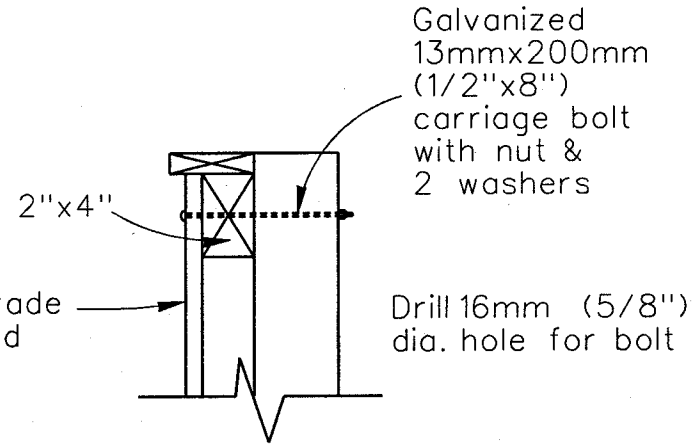

DETAIL

General Notes

1. Lumber to be cut & formed accurately.
2. Secure 1"x4" & plywood with 6d finish nails at not less than 305mm(12") O.C.
3. All exposed nails to be set & holes filled with putty.
4. Sign to be set in good solid ground & backfill carefully tamped into place.
5. Where necessary, posts shall be braced to provide a solid installation.

SIGN DETAILS

Figure 2
October 1996

All units are in millimeters unless otherwise indicated.

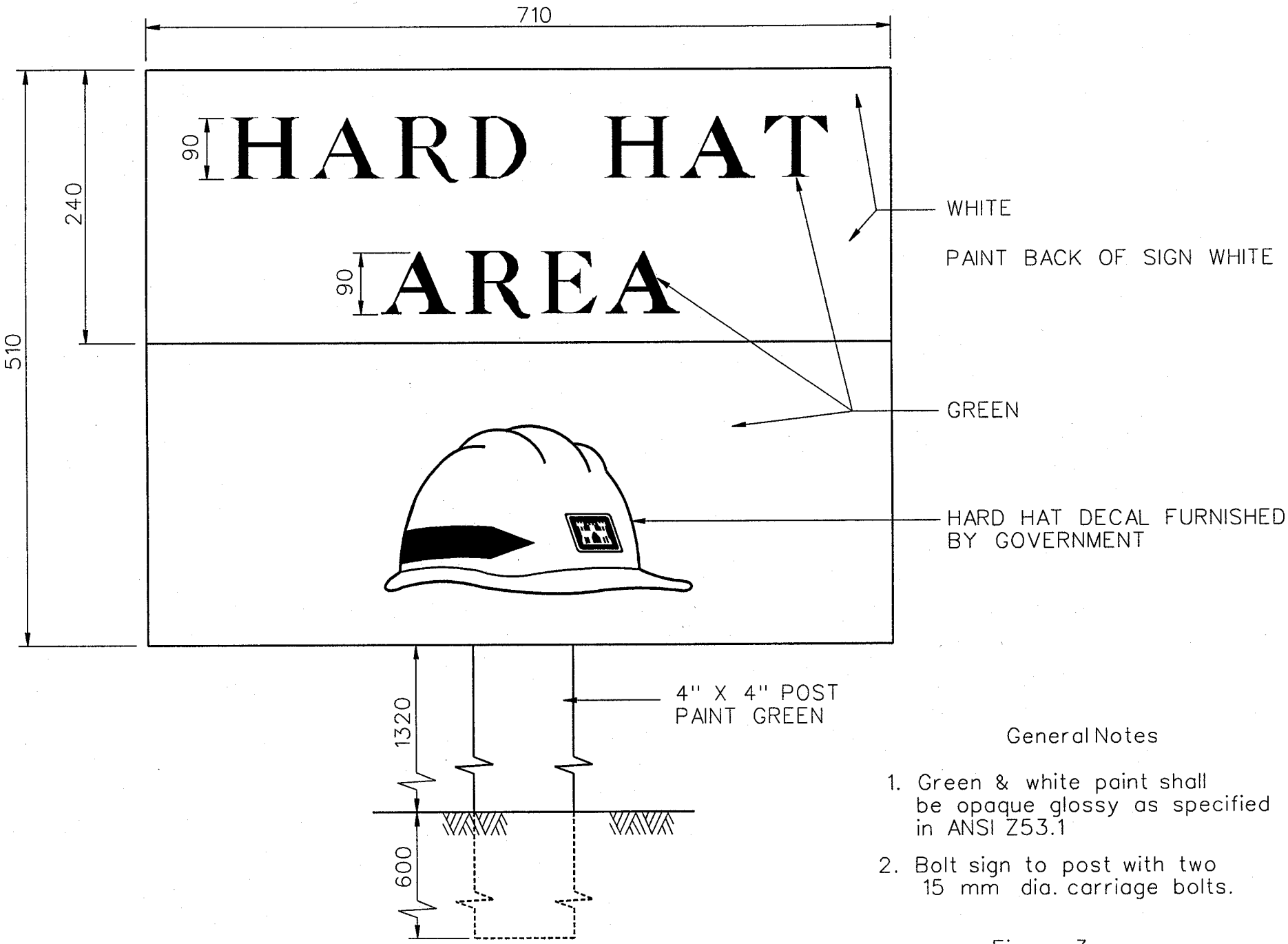

General Notes

1. Green & white paint shall be opaque glossy as specified in ANSI Z53.1
2. Bolt sign to post with two 15 mm dia. carriage bolts.

All units are in millimeters unless otherwise indicated.

Figure 3
October 1996

CORPS OF ENGINEERS U.S. ARMY

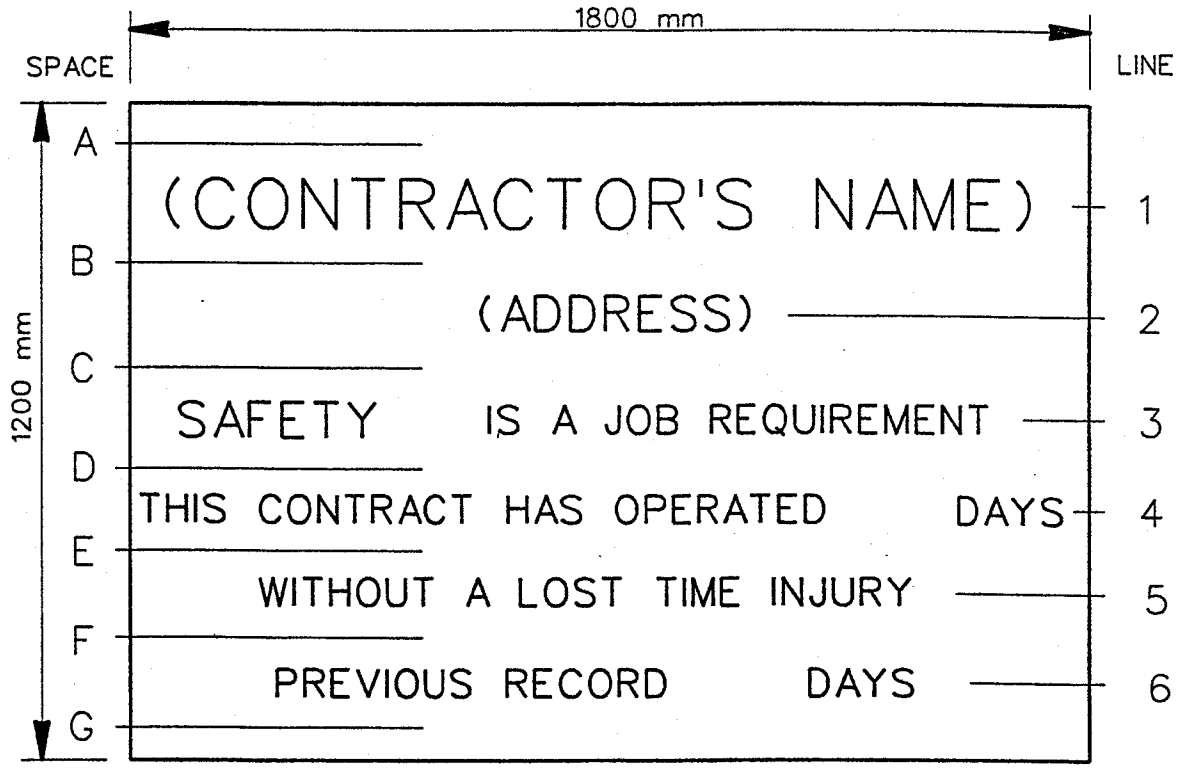

SPACE	HEIGHT	LINE	DESCRIPTION	LETTER HEIGHT
A	125			
		1	CONTRATOR'S NAME	125
B	75			
		2	ADDRESS	75
C	150			
		3	SAFETY IS A JOB REQUIREMENT	115 & 75
D	75			
		4	ALL LETTERING	75
E	75			
		5	ALL LETTERING	75
F	75			
		6	ALL LETTERING	75
G	125			

Notes

Lettering shall be black No. 27038 standard 595.
Sign shall be installed in the same manner as the Project Sign.

All units are in millimeters.

SAFETY SIGN
STANDARD DETAIL

SECTION TABLE OF CONTENTS

DIVISION 01 - GENERAL REQUIREMENTS

SECTION 01270

MEASUREMENT AND PAYMENT

PART 1 GENERAL

1.1 REFERENCES
1.2 LUMP SUM PAYMENT ITEMS
1.2.1 Traffic Control (Bid Item 0001)
1.2.2 Diversion and Control of Water (Bid Item 0002)
1.2.3 Construction Water (Bid Item 0003)
1.2.4 Clear Site and Remove Obstructions (Bid Item 0004)
1.2.5 Ladder Systems (Bid Item 0005)
1.2.6 Channel Station Marking (Bid Item 0006)
1.2.7 Confluence Structures (Bid Item 0007 - 0008)
1.2.8 Access Ramps (Bid Items 0009 - 0010)
1.2.9 Reinforced Concrete Boxes (RCB) (Bid Items 0011 - 0014)
1.2.10 Side Drain Connections (Bid Items 0015 - 0019)
1.2.11 Stilling Well (Bid Item 0020)
1.3 UNIT PRICE PAYMENT ITEMS
1.3.1 Excavation, Channel (Bid Item 0021)
1.3.1.1 Measurement
1.3.1.2 Payment
1.3.1.3 Subgrade or Foundation Preparation
1.3.1.4 Unsatisfactory Soils
1.3.1.5 Trenches
1.3.1.6 Shoring
1.3.2 Fills (Bid Items 0022 - 0023)
1.3.2.1 Measurement
1.3.2.2 Payment for Compacted Fill, Channel
1.3.2.3 Payment for Compacted Fill, Roadways
1.3.2.4 Trenches
1.3.2.5 Backfill About Structures
1.3.2.6 Subgrade Preparation
1.3.3 Excess Material Disposal (Bid Item 0024)
1.3.3.1 Measurement
1.3.3.2 Payment
1.3.4 Reinforced Concrete Pipe (Bid Items 0025 - 0027)
1.3.4.1 Measurement
1.3.4.2 Payment
1.3.5 Aggregate Base Course(Bid Item 0028)
1.3.5.1 Measurement
1.3.5.2 Payment
1.3.6 Asphalt Concrete Pavement (Bid Item 0029)
1.3.6.1 Measurement
1.3.6.2 Payment
1.3.7 Chain Link Fencing and Swing Gate(Bid Items 0030 TO 0031)

1.3.7.1 Measurement
1.3.7.2 Payment for Chain Link Fencing
1.3.7.3 Payment for Swing Gate
1.3.8 Post and Cable Railing (Bid Item 0032)
1.3.8.1 Measurement
1.3.8.2 Payment
1.3.9 Reinforced Concrete (Bid Items 0033 - 0034)
1.3.9.1 Measurement
1.3.9.2 Payment
1.3.9.3 Channel, Invert
1.3.9.4 Channel, Wall
1.3.10 Pre-Emergent Herbicide/Dust Palliative (Bid Item 0035)
1.3.10.1 Measurement
1.3.10.2 Payment
1.4 OPTIONAL BID ITEMS
1.4.1 Reinforced Concrete Box (RCB) (Bid Items 0036 - 0037)
1.4.2 Side Drain Connection, Sta. 37+13.926 (Bid Item 0038)
1.4.3 Reinforced Concrete Pipe 1.676 m Dia. (Bid Item 0039)
1.4.3.1 Measurement
1.4.3.2 Payment
1.4.4 Steel Sleeve (Bid Items 0040)
1.4.4.1 Measurement
1.4.4.2 Payment

PART 2 PRODUCTS (NOT APPLICABLE)

PART 3 EXECUTION (NOT APPLICABLE)

-- End of Section Table of Contents --

SECTION 01270

MEASUREMENT AND PAYMENT

PART 1 GENERAL

1.1 REFERENCES

The publications listed below form a part of this specification to the extent referenced. The publications are referred to in the text by basic designation only.

AMERICAN SOCIETY FOR TESTING AND MATERIALS (ASTM)

ASTM A 615/A 615M	(1996a) Deformed and Plain Billet-Steel Bars for Concrete Reinforcement
ASTM C 127	(1988; R 1993) Specific Gravity and Absorption of Course Aggregate
ASTM C 128	(1997) Specific Gravity and Absorption of Fine Aggregate

1.2 LUMP SUM PAYMENT ITEMS

Payment items for the work of this contract for which contract lump sum payments will be made are listed in the BIDDING SCHEDULE and described below. All costs for items of work, which are not specifically mentioned to be included in a particular lump sum or unit price payment item, shall be included in the listed lump sum item most closely associated with the work involved. The lump sum price and payment made for each item listed shall constitute full compensation for furnishing all plant, labor, materials, and equipment, and performing any associated Contractor quality control, environmental protection, meeting safety requirements, tests and reports, and for performing all work required for which separate payment is not otherwise provided.

1.2.1 Traffic Control (Bid Item 0001)

Payment for Traffic Control will be made at the applicable contract price, which payment shall constitute full compensation for traffic control including but not limited to earthwork and grading for construction and removal of temporary roadways; providing safety barriers; providing traffic warning and control signs and flagmen as required.

1.2.2 Diversion and Control of Water (Bid Item 0002)

Payment for Diversion and Control of Water will be made at the applicable contract price, which payment shall constitute full compensation for control of storm water runoff to prevent adverse impacts to the project or downstream properties.

1.2.3 Construction Water (Bid Item 0003)

Payment for Construction Water will be made at the applicable contract price, which payment shall constitute full compensation for furnishing water for construction and dust control including cost of permits, cost of water taps or hydrants, applicable earthwork, design and installation of temporary water pipeline and storage tanks, maintaining and repairing the water supply system and all incidentals, complete.

1.2.4 Clear Site and Remove Obstructions (Bid Item 0004)

Payment for Clear Site and Remove Obstructions will be made at the applicable contract price, which payment shall constitute full compensation for clearing debris and grubbing areas of excavation, fill, or other approved areas necessary for the Contractor's operations within the limits of the designated temporary construction easement, the protection of existing facilities to remain in place. This work shall include removal of riprap and fence at the headwall connection to existing culvert at the Beltway. Unnecessary clearing will not be permitted. This work shall include disposal off-site of all existing debris such as old pavement, tree trimmings, trash, etc. This work shall also include the protection in place, or restoration, of existing facilities that are to remain in place.

1.2.5 Ladder Systems (Bid Item 0005)

Payment for Ladder Systems will be made at the applicable contract lump sum price for installation of all channel access ladders. The contract price for ladder system shall be considered full payment for fabrication, assembly fittings, finishing, paint and marking, installation of ladder steps, and all equipment, labor and fittings.

1.2.6 Channel Station Marking (Bid Item 0006)

Payment for Channel Station Marking will be made at the applicable contract lump sum price, which shall be considered full payment for preparation, paint and marking, equipment and labor.

1.2.7 Confluence Structures (Bid Item 0007 - 0008)

Payment for Confluence Structure #1 and Confluence Structure #2, including the confluence and transition structures, will be made at the applicable contract lump sum price, which payment shall constitute full compensation for each confluence and transition structure, for the reach of the channel and confluence structure specified, including furnishing and placing reinforcing steel; furnishing, placing, finishing and curing concrete; excluding excavation and compacted fill that is included in separate bid items for Excavation, Channel, and Compacted Fill, Channel; complete as shown on the drawings. Confluence Structure #1 shall be from F-1 Channel Station 19+76.492 to Station 20+68.005 and will include the portion of the Fort Apache Lateral from Fort Apache Lateral Station 10+00.000 to Station 10+06.476. Confluence Structure #2 shall be from F-1 Channel Station 34+05.060 to Station 35+61.625 and will include the portion of the F-2 Channel from F-2 Channel Station 10+00.000 to Station 10+32.058.

1.2.8 Access Ramps (Bid Items 0009 - 0010)

Payment for each Access Ramp #1 and Access Ramp #2 will be made at the applicable contract lump sum price for the reach of channel and ramp specified, which payment shall constitute full compensation for each access ramp, including main channel at ramp, furnishing and placing reinforcing steel; Furnishing, placing, finishing and curing concrete; excluding excavation and compacted fill that is included in separate bid items for Excavation, Channel, and Compacted Fill, Channel; complete as shown on the drawings. Access Ramp #1 shall be from Station 19+13.665 to Station 19+76.492 on the F-1 Channel. Access Ramp #2 shall be from Station 10+95.934 to Station 11+46.953 on the F-2 Channel.

1.2.9 Reinforced Concrete Boxes (RCB) (Bid Items 0011 - 0014)

Payment for RCB will be made at the applicable contract lump sum price for the size and reach of box specified, which payment shall constitute full compensation for RCB and headwalls including earthwork, complete, including: furnishing and placing reinforcing steel; furnishing and placing, finishing and curing concrete, headwalls; and all incidentals, complete as shown on the drawings except for post and cable railing, chain link fencing, and gates. RCB near Beltway shall be 4.000 m x 3.660 m from Station 14+26.483 to Station 14+64.278. RCB Lateral at Fort Apache shall be 3.660 m x 2.440 m from Station 10+00.000 to Station 10+54.100. RCB at Fort Apache shall be 5.000 x 3.000 from Station 20+61.529 to Station 21+23.810. RCB at Grand Canyon shall be 5.000 x 3.000 from Station 28+87.660 to Station 29+48.140.

1.2.10 Side Drain Connections (Bid Items 0015 - 0019)

Payment for Side Drain Connections will be made at the applicable contract lump sum price for each structure and connection at the station specified and shown on the plans, which payment shall constitute full compensation for structure and RCP connection to the channel wall, complete, including: furnishing and placing reinforcing steel; furnishing and placing, finishing and curing concrete, and all incidentals, complete as shown on the drawings, inclusive within the construction joints shown on the plans and drawings.

1.2.11 Stilling Well (Bid Item 0020)

Payment for Stilling Well will be made at the applicable contract price, which payment shall constitute full compensation for the stilling well, complete, including excavation and compacted backfill; furnishing and placing reinforcing steel; staff gauge; manhole, access door, shelf, furnishing PVC coated-rigid steel inlet pipes with slurry backfill; connection to existing and/or new concrete channel walls, including sawcuts and dowels; furnishing, placing, finishing, and curing concrete for, cutoff, walls, slabs, and sills as shown on the drawings; and all incidentals.

1.3 UNIT PRICE PAYMENT ITEMS

Payment items for the work of this contract on which the contract unit price payments will be made are listed in the BIDDING SCHEDULE and described below. The unit price and payment made for each item listed shall constitute full compensation for furnishing all plant, labor, materials, and equipment, and performing any associated Contractor quality control, environmental protection, meeting safety requirements, tests and reports, and for performing all work required for each of the unit price items.

1.3.1 Excavation, Channel (Bid Item 0021)

1.3.1.1 Measurement

A survey of the site shall be made prior to commencement of work, and all measurements will be based on this survey without regard to any changes in the site that may be made between the excavation lines and grades indicated on the drawings or staked in the field and the ground surfaces as indicated by the above mentioned survey. Measurement shall be based on difference between surveyed original grade and the grade and slope of the theoretical cross sections indicated on the drawings. The actual slopes as excavated may be greater or less than those indicated or staked, depending on the materials excavated and methods used in performing the work, but such alterations shall not change the measurement for payment from the original lines as specified herein. The quantity of directed excavation necessary for the removal of unsatisfactory foundation material as specified shall be included in the measurement of the excavation where the unsatisfactory soils are encountered. Quantities will be computed in cubic meters by the average end area method and the planimeter will be considered a precise instrument for measurement of plotted cross sections. The Contractor has the option of using computer methods for quantity estimations, but all computer methods of quantity estimations shall be approved by the Contracting Officer. All excavation outside of excavation lines shown on the drawings will be considered as being for convenience of the Contractor.

1.3.1.2 Payment

Payment for Excavation, Channel will be made at the applicable contract price for excavation per cubic meter, which payment shall constitute full compensation for excavation for the channel, roads and other areas as indicated on the drawings including shoring and blasting. Payment will not be included for excavation (including shoring) outside the excavation limits indicated on the drawings or staked in the field, and other earthwork requirements for which separate payments are provided.

1.3.1.3 Subgrade or Foundation Preparation

No separate payment will be made for subgrade or foundation preparation and all costs in connection therewith shall be included in the contract prices for excavation or the items to which the work applies.

1.3.1.4 Unsatisfactory Soils

No separate payment will be made for the excavation and disposal of unsatisfactory soils. When such excavation is directed, payment will be

made based on the contract unit prices for Excavation, Channel and Compacted Fill.

1.3.1.5 Trenches

No separate payment will be made for the excavation and disposal of pipe trenches. All costs therefore shall be included in the applicable contract prices for the items to which the work applies.

1.3.1.6 Shoring

No separate payment will be made for shoring. The Contractor shall be responsible for method of construction and the use of shoring, stable slope cuts, or other trench safety requirements.

1.3.2 Fills (Bid Items 0022 - 0023)

1.3.2.1 Measurement

Measurement for fills will be made between the excavation and structure lines and the fill limit lines, or between the ground lines and fill lines, as indicated or staked in the field. Quantities will be computed in cubic meters by the average end area method and the planimeter will be considered a precise instrument for measuring plotted cross sections. The Contractor has the option of using computer methods of quantity estimation, but all computer methods of quantity estimation shall be approved by the Contracting Officer.

1.3.2.2 Payment for Compacted Fill, Channel

Payment for Compacted Fill, Channel, will be made at the applicable contract unit price per cubic meter, which payment shall constitute full compensation for shaping, grading, and compacting the fill, complete. Payment will not be included for fills outside the fill limits indicated on the drawings or staked in the field, and other fill requirements for which separate payments are provided.

1.3.2.3 Payment for Compacted Fill, Roadways

Payment for Compacted Fill, Roadways, will be made at the applicable contract unit price per cubic meter, which payment shall constitute full compensation for shaping, grading, and compacting the fill, complete. Payment will not be included for fills outside the fill limits indicated on the drawings or staked in the field, and other fill requirements for which separate payments are provided.

1.3.2.4 Trenches

No separate payment will be made for backfilling pipe including bedding material, selected granular material, or initial backfill material. All costs in connection therewith shall be included in the contract prices for items to which the work applies.

1.3.2.5 Backfill About Structures

No separate payment will be made for backfill about structures. All such costs shall be included in the applicable contract prices for items to which the work applies.

1.3.2.6 Subgrade Preparation

No separate payment will be made for subgrade preparation for areas of fill, and all costs in connection therewith shall be included in the contract prices.

1.3.3 Excess Material Disposal (Bid Item 0024)

1.3.3.1 Measurement

Measurement for Excess Material Disposal shall be equal to the accepted quantity of excavation less the accepted amounts for compacted fill, channel, and roadway. Satisfactory excavated materials shall be used, to the extent possible for construction of fills, embankments, subgrades, shoulders, bedding, and similar purposes. Excess materials, not utilized as compacted fill, shall be disposed of in the designated disposal site as indicated on the drawings.

1.3.3.2 Payment

Payment for Excess Material Disposal shall be at the contract unit price per cubic meter, which payment shall constitute full compensation for haul and placement at the designated disposal site as indicated on the drawings.

1.3.4 Reinforced Concrete Pipe (Bid Items 0025 - 0027)

1.3.4.1 Measurement

Provide reinforced concrete piping as shown on the drawings. The Work shall consist of a complete installation. All excavation, bedding material, backfill, compaction of bedding and backfill, caps and marker posts, and all other trenching related work shall be included. Any trench excavation greater than 1.524 meters deep (vertical wall) shall be braced in accordance with Section 02316. The pipe shall be measured along the flow line. Laying the pipe to line and grade, grouting in the joints and all other piping installation work shall also be included except side drain connection paid under a separate bid item. All labor, equipment, and material costs shall be included in the price per meter for each size and class of RCP.

1.3.4.2 Payment

Payment for Reinforced Concrete Pipe will be made at the applicable contract unit price per linear meter, which payment shall constitute full compensation for the installation, including excavation, bedding and backfill materials and placement, laying the pipe, mortaring the joints, compaction of bedding and backfill materials under, around, and over the pipe, caps and marker posts, complete and in place. Side drain connection is paid under a separate bid item.

1.3.5 Aggregate Base Course(Bid Item 0028)

1.3.5.1 Measurement

Measurement of the base course will be by the metric tonne (1,000 kilograms) of aggregate base course placed within the lines and grades indicated on the drawings.

1.3.5.2 Payment

Payment for Aggregate Base Course will be made at the applicable contract unit price per metric tonne, which payment shall constitute full compensation for work required for installation of aggregate base course, furnishing, placing, and compacting the aggregate base course, complete, including subgrade preparation.

1.3.6 Asphalt Concrete Pavement (Bid Item 0029)

1.3.6.1 Measurement

Measurement for Asphalt Concrete Pavement will be by the metric tonne (1,000 kilograms) of asphalt concrete pavement placed within the lines and grades as indicated on the drawings.

1.3.6.2 Payment

Payment for Asphalt Concrete Pavement will be made at the applicable contract price which payment shall constitute full compensation for asphalt concrete pavement in place, complete including tack coat, prime coat and appurtenant work except for aggregate base course. No payment will be made for excessive thickness.

1.3.7 Chain Link Fencing and Swing Gate(Bid Items 0030 TO 0031)

1.3.7.1 Measurement

Measurement of Chain Link Fencing that is provided will be by the linear meter of chain link fencing constructed as shown on the drawings. Gates shall be measured for each type and size acceptably installed.

1.3.7.2 Payment for Chain Link Fencing

Payment for Chain Link Fencing will be made at the applicable contract unit price per linear meter of fabric specified, which payment shall constitute full compensation for chain link fencing, including posts with caps, rail, chain link fabric, stretcher bars, tension bands, wire ties, truss wire, sleeves, grout, and all incidentals, complete as shown on the drawings.

1.3.7.3 Payment for Swing Gate

Payment for Swing Gate will be made at the applicable contract price, per each, for chain link double swing gates, which payment shall constitute full compensation for obtaining and installing gates complete, as shown on

the drawings.

1.3.8 Post and Cable Railing (Bid Item 0032)

1.3.8.1 Measurement

Measurement of Post and Cable Railing will be by the linear meter, measured from end to end, of railing installed as shown on the drawings.

1.3.8.2 Payment

Payment for Post and Cable Railing will be made at the applicable contract unit price per linear meter, which payment shall constitute full compensation for railing, including posts, cable, safety chain gates, galvanized appurtenances, fabrication, grout or dry pack, and all incidentals, complete.

1.3.9 Reinforced Concrete (Bid Items 0033 - 0034)

1.3.9.1 Measurement

Measurement of concrete will be made on the basis of the actual volume, in cubic meters, of concrete within the pay lines of the channel slab, and channel walls, as shown on the drawings. Measurement of concrete placed against the sides of any excavation without the use of intervening forms will be made only within the pay lines of the structures. No deductions will be made for rounded or beveled edges or space occupied by metalwork, nor voids or embedded items which are either less than 0.15 cubic meter in volume or one-tenth of square meter in cross section. Concrete wasted or used for the convenience of the Contractor will not be included in measurement for payment.

1.3.9.2 Payment

Payment for the concrete items will be made at the applicable contract prices for the various items of the schedule, which payments shall constitute full compensation for labor, reinforcing steel, forming, finishing, curing, joint sealant complete, and for all equipment and tools to complete the concrete work. Embedded items (such as weepholes) shall be included in the cost of the concrete except when other payment is specifically provided. No payment will be made for concrete, as such, which is placed in structures for which payment is made on a lump sum basis.

1.3.9.3 Channel, Invert

Payment for the Channel, Invert will be made at the applicable contract unit price per cubic meter, which payment shall constitute full compensation for all concrete placed for the channel invert slab, keys, and starter walls, complete.

1.3.9.4 Channel, Wall

Payment for the Channel, Wall will be made at the applicable contract unit price per cubic meter, which payment shall constitute full compensation for

all concrete placed above the starter walls in the vertical walls of the channel, and cast-in-place boxes, complete.

1.3.10 Pre-Emergent Herbicide/Dust Palliative (Bid Item 0035)

1.3.10.1 Measurement

Measurement of Pre-Emergent Herbicide/Dust Palliative will be made on the basis of the actual area in hectares surfaces treated with dust palliative or as directed.

The following tasks shall be included in the measurement for payment:

All disturbed areas in the channel not covered by concrete or asphalt shall be treated with a pre-emergent herbicide to discourage the growth of weeds and other vegetation and a dust palliative for soil stabilization.

Prior to the application of the herbicide and dust palliative, all earthen slopes and surfaces shall be finished to the grades shown on the drawings or as directed by the Engineer, including the removal of all existing vegetation and the filling and smoothing of erosional features and surface irregularities. The finished surfaces shall then be scarified to a depth of 150 mm, compacted, and groomed to produce a smooth surface with all particles greater than 75 mm in diameter removed.

Soil surfaces prepared as described above shall then be treated with a pre-emergent herbicide using a mixture of SURFLAN herbicide or approved equal applied at 0.16 liters per hectare and GALLERY herbicide or approved equal applied at 0.01 liters per hectare. The soil surface shall then be stabilized using PLASTEX soil stabilization agent or approved equal at a rate of 58 kg per hectare. The gypsum used in the soil stabilization material shall be processed to be composed of a crushed, dry calcium sulfate hemihydrate (CA S04, 1/2 H2O) having a purity of not less than 88 percent. The pre-emergent herbicide and dust palliative shall be watered in per the manufacturer's recommendations.

The Contractor shall add a color pigment to the dust palliative slurry at the time of application. Apply color pigment to match existing ground surface color, at the application rate recommended by the manufacturer.

1.3.10.2 Payment

Payment for Pre-Emergent Herbicide/Dust Palliative will be at the applicable contract price, which payment shall constitute full compensation including grading, scarifying furnishing materials, processing, and application, complete in place.

1.4 OPTIONAL BID ITEMS

Construction of reinforced concrete boxes for the F-1 and F-2 Hualapai Way roadway crossings and other facilities in Hualapai Way are optional construction that may or may not be awarded.

1.4.1 Reinforced Concrete Box (RCB) (Bid Items 0036 - 0037)

Payment for F-1 RCB and F-2 RCB at Hualapai Way will be made at the applicable contract lump sum price for the size and reach of box specified, which payment shall constitute full compensation for RCB and headwalls including earthwork, complete, including: furnishing and placing reinforcing steel; furnishing and placing, finishing and curing concrete, headwalls; and all incidentals, complete as shown on the drawings except for post and cable railing, chain link fencing, and gates. F-1 RCB at Hualapai Way shall be 4.000 m x 3.000 m from Station 36+80.049 to Station 37+52.022. F-2 RCB at Hualapai Way shall be 5.000 m x 3.000 m from Station 11+61.850 to Station 12+29.550.

1.4.2 Side Drain Connection, Sta. 37+13.926 (Bid Item 0038)

Payment for Side Drain Connection, Sta. 37+13.926 will be made at the applicable contract lump sum price for the structure and connection at the station specified and shown on the plans, which payment shall constitute full compensation for structure and RCP connection to the channel wall, complete, including: furnishing and placing reinforcing steel; furnishing and placing, finishing and curing concrete, and all incidentals, complete as shown on the drawings, inclusive within the construction joints shown on the plans and drawings.

1.4.3 Reinforced Concrete Pipe 1.676 m Dia. (Bid Item 0039)

1.4.3.1 Measurement

Provide reinforced concrete piping as shown on the drawings. The Work shall consist of a complete installation. All excavation, bedding material, backfill, compaction of bedding and backfill, caps and marker posts, and all other trenching related work shall be included. Any trench excavation greater than 1.524 meters deep (vertical wall) shall be braced in accordance with Section 02316. The pipe shall be measured along the flow line. Laying the pipe to line and grade, grouting in the joints and all other piping installation work shall also be included except side drain connection paid under a separate bid item. All labor, equipment, and material costs shall be included in the price per meter for each size and class of RCP.

1.4.3.2 Payment

Payment for Reinforced Concrete Pipe 1.676 m Dia. will be made at the applicable contract unit price per linear meter, which payment shall constitute full compensation for the installation, including excavation, bedding and backfill materials and placement, laying the pipe, mortaring the joints, compaction of bedding and backfill materials under, around, and over the pipe, caps and marker posts, complete and in place. Side drain connection paid under a separate bid item.

1.4.4 Steel Sleeve (Bid Items 0040)

1.4.4.1 Measurement

The Contractor shall provide steel sleeve as shown on the drawings. The

work shall consist of a complete installation including caps and marker posts. All excavation, bedding material, backfill, compaction of bedding and backfill, and all other trenching related work shall be included. Any trench excavation greater than 1.524 meters deep (vertical wall) shall be braced in accordance with Section 02316. The pipe sleeve shall be measured along the flow line. Laying the pipe sleeve to line and grade and all other installation work shall also be included. All labor, equipment, and material costs shall be included in the price per linear meter of steel pipe sleeve.

1.4.4.2 Payment

Payment for Steel Sleeve will be made at the applicable contract unit price per linear meter, which payment shall constitute full compensation for the installation of sleeve, caps, and marker posts, involving excavation, bedding and backfill materials and placement, laying the sleeve, compaction of bedding and backfill materials under, around, and over the sleeve, complete and in place.

PART 2 PRODUCTS (NOT APPLICABLE)

PART 3 EXECUTION (NOT APPLICABLE)

-- End of Section --

SECTION TABLE OF CONTENTS

DIVISION 01 - GENERAL REQUIREMENTS

SECTION 01321

NETWORK ANALYSIS SCHEDULES (NAS)

PART 1 GENERAL

1.1 DESCRIPTION
1.2 SUBMITTALS
1.3 SCHEDULE ACCEPTANCE
1.3.1 Schedule Acceptance Prior to Start of Work
1.3.2 Acceptance
1.4 SOFTWARE
1.4.1 Computer Hardware
1.4.2 Software Training
1.5 QUALIFICATIONS
1.6 NETWORK SYSTEM FORMAT
1.6.1 Diagrams
1.6.2 Quantity and Numbering of Activities
1.6.2.1 Procurement Activities
1.6.2.2 Government Activities
1.6.2.3 Construction Activities
1.6.2.4 Anticipated Weather Delays
1.6.2.5 Activity Properties
1.6.3 Mathematical Analysis
1.6.4 Required Reports
1.7 SUBMISSION AND ACCEPTANCE
1.7.1 Preliminary Meeting
1.7.2 Schedule Development Session:
1.7.3 Network Analysis Schedule
1.7.4 Review and Evaluation
1.7.5 Accepted Network Analysis Schedule
1.7.6 Monthly Network Analysis Updates
1.7.7 As-Built Schedule
1.8 CONTRACT MODIFICATION
1.8.1 Time Impact Analysis:
1.8.2 No Reservation-Of-Rights
1.9 CHANGES TO THE NETWORK ANALYSIS SCHEDULE
1.10 FLOAT
1.10.1 Definitions of Float or Slack
1.10.2 Ownership of Float
1.10.3 Negative Float
1.11 TIME EXTENSIONS
1.12 MONTHLY COORDINATION MEETING
1.13 BIWEEKLY WORK SCHEDULE
1.14 CORRESPONDENCE AND TEST REPORTS

PART 2 PRODUCTS

PART 3 EXECUTION

-- End of Section Table of Contents --

SECTION 01321

NETWORK ANALYSIS SCHEDULES (NAS)

PART 1 GENERAL

1.1 DESCRIPTION

Prepare a progress chart pursuant to the clause entitled "FAR 52.236-15, Schedules for Construction Contracts" of the Contract Clauses that shall consist of a network analysis system. The network analysis system shall consist of the network analysis schedule (diagram), mathematical analysis, and associated reports. The scheduling of construction shall be the responsibility of the Contractor. Submission of progress and revision data will be used to measure work progress, aid to evaluate time extensions, and provide basis of all progress payments. The Critical Path Method (CPM) of network calculation shall be used to generate the project schedule and will utilize the Precedence Diagram technique to satisfy both time and cost applications. All progress payment amounts will be derived from and tied to the cost-loaded schedule activities.

1.2 SUBMITTALS

Government approval is required for submittals with a "G" designation; submittals not having a "G" designation are for information only. When used, a designation following the "G" designation identifies the office that will review the submittal for the Government. The "RE" designates that the Resident Office will review the submittal for the Government. Submit the following in accordance with Section 01330, SUBMITTAL PROCEDURES:

SD-01 Preconstruction Submittals

Qualifications; G, RE.

Standard Activity Coding Dictionary

Schedule Development Session Scheduler/Planner; G, RE.

Network Analysis Schedule; G, RE.

Accepted Network Analysis Schedule; G, RE.

SD-07 Certificates

Monthly Network Analysis Updates; G, RE.

SD-11 Closeout Submittals

As-Built Schedule; G, RE.

1.3 SCHEDULE ACCEPTANCE

Review comments made by the Government on the Contractor's construction schedule will not relieve the Contractor from compliance with requirements of the Contract Documents. The Contractor is responsible for scheduling, sequencing, and prosecuting the Work to comply with the requirements of the Contract Documents. Government acceptance extends only to the activities of the contractor's schedule that the Government has been assigned responsibility for and agrees it is responsible. The Government will also review for contract imposed schedule constraints and conformance, and cost loading of the CPM activities. Comments offered on other parts of the schedule which the Contractor is assigned responsibility are offered as a courtesy and are not conditions of government acceptance; but are for the general conformance with established industry schedule concepts.

1.3.1 Schedule Acceptance Prior to Start of Work

The Accepted Network described in the paragraph entitled "Accepted Network Analysis Schedule" must be submitted and accepted by the government before the contractor will be allowed to start work.

1.3.2 Acceptance

a. When the Accepted Network Analysis Schedule is submitted and accepted by the Contracting Officer, it will be considered the "Baseline CPM Schedule". The Baseline CPM Schedule will then be used by the Contractor for planning, organizing, and directing the work; reporting progress; and requesting payment for work accomplished. The schedule will be updated monthly by the Contractor and submitted monthly with the progress pay request to reflect the current status of the work. The submittal and acceptance of the Accepted Network Analysis Schedule and accurate updated schedules accompanying the pay requests are both conditions precedent to processing pay requests. Only bonds will be paid prior to acceptance of the Accepted Network Analysis Schedule.

b. Submittal of the Network, and subsequent schedule updates, will be understood to be the Contractor's representation that the submitted schedule meets all of the requirements of the Contract Documents, accurately reflects the work accomplished, and that Work will be executed in the sequence indicated on the submitted schedule.

1.4 SOFTWARE

The scheduling software that will be utilized by the government on this project is Primavera Project Planner (P3) by Primavera Systems, Inc. If the contractor chooses to use an equally capable program, the contractor shall convert all data into Primavera Machine Readable Format (Lotus, D-Base, Excel, etc.) prior to submission of all schedule inputs, included but not limited to the initial schedule, monthly updates, and changes to the schedule. It is the responsibility of the Contractor to ensure all data elements and logic required by this specification are kept intact

during the conversion to Primavera. If scheduling software other than Primavera is being used, provide a licensed copy of the Contractor's scheduling software and data. The software will be the most current version available and will be compatible with all MS-Windows operating systems (e.g., Win NT, Win 95, etc.). The scheduling software package shall contain all user manuals normally provided by the software distributor. If the Contractor upgrades their software during the course of the contract, the upgrade shall also be provided to the Contracting Officer. The software will remain the property of the government.

1.4.1 Computer Hardware

The Contractor shall provide and maintain a personal computer (PC) capable of running the network analysis software specified herein. The Contractor shall also provide a printer and plotter with necessary cables. The PC will remain the property of the Contractor.

1.4.2 Software Training

If software other than Primavera is used by the Contractor, provide schedule software training for two Government personnel. A firm accredited by the scheduling software manufacturer, as their authorized trainer shall conduct the training. The training shall last a minimum of 24 hours per individual. Provide course material the training firm normally distributes at their software classes. Provide all necessary materials and equipment to conduct the training. The Contractor shall provide training within 10 working days after notification to the Contractor, by the Contracting Officer. Unless agreed to by the Contracting Officer, the training site shall be at the Contracting Office.

1.5 QUALIFICATIONS

The Contractor shall designate a Scheduler that will be responsible for the development, preparation, and maintenance of an accurate, computerized Network Analysis Schedule. The Scheduler shall have previously developed, created and maintained at least 2 previous computerized schedules of similar size and complexity of this contract. A resume outlining the qualifications of the scheduler shall be submitted for acceptance to the Contracting Officer. If at a later date, the Contracting Officer considers the Contractor's Scheduler to be incompetent or objectionable, the Contractor will propose a new Scheduler, meeting the qualification requirements. Payments will not be processed until an acceptable Scheduler is provided.

1.6 NETWORK SYSTEM FORMAT

The system shall consist of time scaled logic diagrams accompanying mathematical analyses and specified reports.

1.6.1 Diagrams

Show the order and interdependence of activities and the sequence in which the work is to be accomplished as planned. The basic concept of a network analysis diagram will be followed to show how the start of a given activity

is dependent on the completion of preceding activities and how its completion restricts or restrains the start of following activities. Diagrams shall be organized by Work Phase and sorted by Early Start Date and will show a continuous flow from left to right with no logic (relationship lines) from right to left. With the exception of the Project Start and Project Completion milestone activities, no activities will be open-ended; each activity will have predecessor and successor ties. The diagram shall clearly show the activities of the critical path. No onsite construction activity shall have duration in excess of 20 working days. Once an activity exists on the schedule it may not be deleted and must remain in the logic. No more than 20 percent of the activities may be critical or near critical. Critical will be defined as having zero days of Total Float. "Near critical" will be defined as having Total Float in the range of 1 to 14 days. Show the following information on the diagrams for each activity:

a. Activity/Event Number

b. Activity Description

c. Original Duration in work days

d. Actual Duration in Work Days

e. Early Start Date

f. Early Finish Date

g. Total Float (or Slack)

h. Responsibility Code

Provide network diagrams on ANSI E sheets. Updated diagrams shall show the date of the latest revision.

1.6.2 Quantity and Numbering of Activities

Numbering shall be assigned so that, in general, predecessor activity numbers are smaller numerically than the successor activity numbers. Skip numbering shall be used on the network to allow insertion of additional activities for contract modifications and logic changes. The minimum number of construction activities in the final network diagram shall be 20. Types of activities included in the schedule are specified below.

1.6.2.1 Procurement Activities

Tasks related to the procurement of material or equipment shall be included as separate activities in the project schedule. Examples of procurement activities include, but are not limited to: Material/equipment submittal preparation, submittal and approval of material/equipment; delivery of O&M manuals; material/equipment fabrication and delivery, delivery of extra parts, extra stock, special tools, notification of Government Furnished Material/Equipment delivery requirement, etc. As a minimum, separate procurement activities will be provided for every specification section.

If the Contractor intends on using Just-In-Time (JIT) delivery methods, the schedule will show each JIT delivery with relationship tie to the Construction Activity specifically for the JIT delivery. Material and equipment for which payment will be requested in advance of installation shall be cost-loaded with the procurement costs. All activities within a procurement process/cycle will have a unique identifier in the activity code to show their relationships and will extend to the related construction activities (i.e., Work Category).

If the Government's action on any submittal is "Disapproved" or "Revise and Resubmit", a new series of Procurement Activities will be inserted into the schedule. Predecessor for the new submittal preparation activity will be the original approval activity and the successor of the new approval activity will be the fabrication/deliver activity for the equipment or material.

1.6.2.2 Government Activities

Government and other agency activities that could impact progress shall be clearly identified. Government activities include, but are not limited to; Government approved submittal reviews, Government conducted inspections/tests, utility outages, Notice(s) to Proceed and delivery of Government Furnished Material/Equipment. Show activities indicating Government furnished materials and equipment utilizing delivery dates indicated in "FAR 52.245-2, Government Property (Fixed-Price Contracts)." Government activities will be driven by calendars that reflect Saturdays, Sundays and all Federal Holidays as non-work days.

1.6.2.3 Construction Activities

Construction activities shall include, but are not limited to: Tasks related to mobilization/demobilization; the installation of temporary or permanent work by tradesman; testing and inspections of installed work by technicians, inspectors or engineers; start-up and testing of equipment; commissioning of building and related systems; scheduling of specified manufacture's representatives; final clean-up; training to be provided; and administrative tasks necessary to start, proceed with, accomplish or finalize the contract. Contractor activities will be driven by calendars that reflect Saturdays, Sundays and all Federal Holidays as non-work days.

1.6.2.4 Anticipated Weather Delays

Schedule activity duration(s) shall be formulated with allowance for normal adverse weather conditions. Any activity duration which could be impacted by normally anticipated adverse weather (precipitation, high or low temperature, wind, etc.), due to the time period which the Contractor has scheduled the work, shall include an adjustment to include the anticipated weather delay. The following schedule of monthly anticipated adverse weather delays is based on National Oceanic and Atmospheric Administration (NOAA) or similar data for the project location and will constitute the base line for monthly weather time evaluations. The Contractor's progress schedule must reflect these anticipated adverse weather delays in all weather dependent activities.

MONTHLY ANTICIPATED ADVERSE WEATHER DAYS
Work Days Based on five (5) Day Work Week

JAN	FEB	MAR	APR	MAY	JUN	JUL	AUG	SEP	OCT	NOV	DEC
6	2	2	1	1	0	2	2	1	1	1	3

The number of anticipated adverse weather delays allocated to an activity will be reflected in the activity's calendar. A lost workday, due to weather conditions, is defined as a day in which the contractor's workforce cannot work 50 percent or more of the day. The Contractor shall immediately notify the Contracting Officer when a lost day has occurred due to weather and will record on the Daily Reports, the occurrence of adverse weather and resultant impact to the normally scheduled work. If the number of actual adverse weather delay days exceeds the number of days anticipated, the Contracting Officer will convert any qualifying delays to calendar days, giving full consideration for equivalent fair weather work days and issue a modification in accordance with the contract clauses.

1.6.2.5 Activity Properties

Schedule activities will have the following properties:

a. Standard Activity Coding Dictionary: The Contractor shall submit a coding scheme for Schedule Activity Numbers that shall be used throughout the project. The coding scheme submitted shall list the values for each activity code category and translate those values into project specific designations. Code length shall not exceed 10 characters. Once accepted, the coding scheme will be used for the duration of the project.

b. Activity Description: Each activity shall have a narrative description consisting of a Verb or work function (e.g.; form, pour, excavate), an Object (e.g.; slab, footing, underfloor plumbing), and Area (e.g.; 3rd floor, northeast quadrant, basement).

c. Work Category: All Activities shall be identified in the project schedule according to the work category which best describes the activity. Examples of work categories are procurement, government, and construction activities that are all related to a single Definable Feature of Work. Activities shall not be contained in more than one Work Category.

d. Area Code: All activities shall be identified in the project schedule by the Area Code in which the activity occurs. Activities shall not be contained in more than one Area Code. Area is defined as a distinct separation in construction, such as a story of construction, separate structure, usage or function difference, utility distribution systems, etc.

e. Responsibility Code: All activities in the project schedule shall be identified with the party responsible to perform the task. Responsibility includes, but is not limited to; the prime

contractor, subcontracting firm, or Government agency performing a given task. Activities shall not belong to more than one responsible party. The responsible party for each activity shall be identified by a responsibility code. For example, a responsibility code value, "ELEC", may be identified as "Electrical Subcontractor."

f. CSI Code: All activities in the project schedule shall be identified with its respective 5-digit Specification Section number. Activities shall not belong to more than one Section number. If an activity does not have an applicable CSI Code, (such as "Mobilize"), the code will be "00000".

g. Drawing Code: All activities in the project schedule shall be identified with its respective project drawing code. The drawing code is the Sheet Number on the primary project drawing which indicates the work to be performed. Activities shall not belong to more than one Drawing Code. Examples of Drawing Codes are "C-10", "C.10" or "C10". The code system will allow organizing all activities by drawing code in alpha and numeric order. If an activity does not have an applicable Drawing Code, (such as "Mobilize"), the code will be "00000".

h. Modification Code: The Modification Code shall identify activities that are modified or added by contract modification. Activities shall not belong to more than one Modification Code. The Government will assign the modification number, which will be shown on the SF 30. Use a shortened version of the modification number for the code (e.g.; A00010 = 010).

i. Request for Equitable Adjustment (REA) or Claim Code: Activities that are modified or added, as a result of a Contractor's REA or Claim shall be identified by a code generated by the Contractor. Activities shall not belong to more than one REA or Claim Code.

j. The Three Phases of Control (Preparatory, Initial, and Follow-up): For each Definable Feature of Work identified in the Contractor's Quality Control Plan, include an activity for the Preparatory Phase. The Initial Phase and Follow-up Phase will be represented by the Construction Activities in the schedule.

k. Project Milestone Dates: Dates shall be shown on the diagram for the start of the project, any contract required interim start and completion dates, contract completion date and other significant milestones.

l. Scheduled Project Duration: The schedule duration shall extend from notice-to-proceed to the contract completion date.

m. Project Start Date Milestones: The schedule shall start no earlier than the contract award date and the project duration (Day 1) will start on the Notice-to-Proceed (NTP) date. The Contractor shall include as the first activity in the schedule, an activity named "Contract Award" and another activity on the NTP date named

"Start Project". Both activities will be zero duration, with constrained start dates equal to the contract award and NTP dates.

n. Constraint of Last Activity Milestone: The Contractor shall include as the last activity in the project schedule, an activity named "End Project". The "End Project" activity shall be zero duration with a mandatory finish constraint equal to the contract completion date for the project. Calculation of project updates shall be such that if the finish of the last activity falls after the contract completion date, then the float calculation shall reflect negative float on the critical path.

o. Early Project Completion: In the event the Contractor's project schedule shows completion of the project prior to the contract completion date, the Contractor shall include an activity named "Contractor Early Completion". The activity shall be a zero duration milestone with an unconstrained date representing the Contractor's Early Completion date.

p. Substantial Completion: If the contractor elects to include an activity for Substantial Completion, then it is agreed that Substantial Completion will be the point in time that the Government considers the project is complete and ready for its intended use. The activity will be named "Substantial Completion". The activity shall be a zero duration milestone with an unconstrained date representing the Contractor's Substantial Completion date.

q. Activity/Event Constraints: Date/time constraint(s), other than those required by the contract, will not be allowed unless accepted by the Contracting Officer.

r. Leads and Lags: Leads or lags will not be used when the creation of an activity will perform the same function (e.g., concrete cure time). Lag durations contained in the project schedule shall not have a negative value. The use of any lead or lag will be explained in the Narrative Report.

s. Default Progress Data Disallowed: Actual Start and Finish dates shall not be automatically updated by default mechanisms that may be included in the CPM scheduling software system. Actual Start and Actual Finish dates on the CPM schedule shall match the dates provided from Contractor Quality Control and Production Reports. These reports will be the sole basis for updating the schedule. Work activities will be updated by actual work progression rather than being cash flow driven. The updating of the percent complete and the remaining duration of any activity shall be independent functions; program features that calculate one of these parameters from the other shall be disabled. Out-of-Sequence progress (if applicable) shall be handled through Retained Logic, not the Default Option of Progress Override. Actual labor and equipment hours used on activities will be derived from the daily reports.

1.6.3 Mathematical Analysis

The network diagram mathematical analysis shall include a tabulation of each activity shown on the detailed network diagrams. Provide the following information as a minimum for each activity:

a. Activity/Event number

b. Activity/Event description

c. Estimated duration of activities (by work days)

d. Earliest start date (by calendar date)

e. Earliest finish date (by calendar date)

f. Actual start date (by calendar date)

g. Actual finish date (by calendar date)

h. Latest start date (by calendar date)

i. Latest finish date (by calendar date)

j. Total float or slack

k. Material/Equipment costs will be assigned to their respective Procurement Activities (i.e., the delivery activity). Costs for installation of the material/equipment (labor, construction equipment, and temporary materials) will be assigned to their respective Construction Activities. The value of inspection/testing activities will not be less than 10 percent of the total costs for Procurement and Construction Activities. Evenly disperse overhead and profit to each activity over the duration of the project.

l. Responsibility code (including prime contractor, subcontractors, suppliers, Government, or other party responsible for accomplishment of an activity.)

m. Area Code

n. Manpower required (crew size)

o. Percentage of activity duration completed

p. Contractor's earnings based on accepted work-in-place.

The program or means used in making the mathematical computation shall be capable of compiling the total value of completed and partially completed activities. The program shall also be capable of accepting revised completion dates as modified by approved time extensions and recompilation of tabulation dates/costs and float accordingly. The total of all cost loaded activities; including costs for material and equipment delivered for installation on the project, and manpower and construction equipment loaded

construction activities, shall total to 100 percent of the value of the contract.

1.6.4 Required Reports

The following reports will be made available in the schedule submittals and in each updated schedule submission provided on disk by the Contractor:

a. By the preceding event number from lowest to highest and then in the order of the following activity number (Activity Identification Report) showing the current status of all activities.

b. By the amount of total float, from lowest to highest and then in order of activity number (Total Float or Slack Report) showing all incomplete activities.

c. By latest allowable start dates and then in order of activity numbers (Late Start Report).

d. Earned Value Report listing all activities having a budget amount and cost. A compilation of total earnings on the project from the notice to proceed to the most recent monthly progress payment request and the difference between the previous request amount and the current payment request amount. Sort report first by resource and then by activity.

e. By earliest allowable start dates and then in order of activity number (Early Start Report).

f. By tasks scheduled to start and finish by the end of the next pay period (30-Day Look Ahead).

g. With each updated schedule submission, provide a computer generated Log Report using a recognized schedule comparison software listing all changes made between the previous schedule and current updated schedule. Identify the name of the previous schedule and name of the current schedule being compared. This report will as a minimum show changes for: Added & Deleted Activities, Original Durations, Remaining Durations, Activity Percent Complete, Total Float (or Slack), Free Float, Calendars, Descriptions, Constraints (added, deleted or changed), Actual Starts/Finishes, Added/Deleted Resources, Resource Quantities, Costs, Resource Percents, Added/Deleted Relations, Changed Relation Lags, Changed Driving Relations, and Changed Critical Status.

h. By the activity number from lowest to highest, showing preceding and succeeding activity numbers for each activity (Predecessor/Successor Report), and showing the current status of each activity.

1.7 SUBMISSION AND ACCEPTANCE

1.7.1 Preliminary Meeting

At the Pre-Construction Conference, the Contracting Officer, Contractor and major subcontractors shall participate in a preliminary meeting to discuss the proposed schedule and requirements of this section prior to submission of the network. The definition of a "major subcontractor" is one that exceeds 5 percent of the contract value.

1.7.2 Schedule Development Session:

Prior to the submission of the Network Analysis Schedule, the Contractor shall conduct a Schedule Development Session. The Schedule Development Session shall include procurement of on site services of an expert scheduler/planner for not less than a 5 day period. The Contractor's choice of Schedule Development Session scheduler/planner is subject to the acceptance of the Contracting Officer. The scheduler/planner shall facilitate the session on site and shall be fluent in the English language. The scheduler/planner shall have at least 10 years experience developing construction project schedules with scheduling software programs that the contractor intends to use. Unless agreed to by the Contracting Officer, the session shall be conducted at the Office of the Contracting Officer. The Contractor is responsible for providing the necessary equipment for the session which, as a minimum, includes a personal computer (PC), a computer display projector to facilitate group viewing, and a printing device. During the session the facilitator shall provide all necessary training to participants and] shall lead the development of the project's schedule. As a minimum, the scheduler/planner shall facilitate development of activity coding and work breakdown structures; establishment of procurement, government, and construction activities; activity relationship; resourcing; budgeted costs; and reports to be used during the project. Members of the Contracting Officer's staff will attend the session as well as members of the designer of record, local sponsor, major subcontractors (those which exceed 5 percent of the contract value), and the Contractor's home and field project management staff. All costs associated with the Schedule Development Session are to be borne by the Construction Contractor.

1.7.3 Network Analysis Schedule

Submit the complete network system, consisting of the network mathematical analysis and network diagrams, within 40 calendar days after contract award. Submit three copies of the diagrams described in the paragraph entitled "Diagrams", the required reports listed in the paragraph entitled "Required Reports ", and the analysis described in the paragraph entitled "Mathematical Analysis". As part of this submittal, provide the Project Name format (and Project Group Name if used) that will be used by the Contractor to identify initial schedule submittals, updates, fragnets, changes, etc. Include 1 copy of the Network Analysis Schedule on 3.5" disk(s) formatted to hold 1.44 MB of data.

1.7.4 Review and Evaluation

After the Government's review, the Contractor shall meet with the Contracting Officer to discuss the review and evaluation of the NAS submittal. Revisions necessary as a result of this review shall be

resubmitted for acceptance within 10 calendar days after the meeting.

1.7.5 Accepted Network Analysis Schedule

Once review comments are resolved and the network has been accepted by the Contracting Officer, the Contractor shall within 5 calendar days furnish:

a. Two copies of the network diagrams

b. Two copies of the required reports listed in paragraph entitled "Required Reports"

c. Two copies of the "Mathematical Analysis".

d. Two copies of the Cash Flow Report indicating the cash flow based upon both the early and late start schedules.

e. Two copies of each major subcontractor's statement certifying their concurrence with the Contractor's Accepted Network Analysis Schedule. Each certifying statement will be made on the subcontractor's letterhead.

f. Two sets of data disks containing the project schedule shall be provided for the initial submission and every periodic project update. Data shall be submitted on 3.5: disk(s), formatted to hold 1.44 MB of data. A permanent exterior label shall be affixed to each disk submitted. The label shall indicate the type of schedule (Preliminary, NAS Submittal, Accepted, Update, Recovery, or Change), full contract number, Project Name used to identify project in scheduling software, contract name & location, data status date, diskette number with total number of diskettes in set, software name and version used to run the schedule, and the name and telephone number of person responsible for the schedule.

For major revisions, updates or changes to the network diagrams, once accepted by the Contracting Officer, the Contractor shall submit these same diagrams and reports.

1.7.6 Monthly Network Analysis Updates

At monthly intervals the Contractor, Government representatives and major subcontractors will meet to jointly update the project schedule and agree on percentage of payment for each activity progressed during the update period. The purpose of the meeting is to determine progress payment amounts for each activity, allow all parties to evaluate project status at the data date, provide a complete and accurate update of procurement and construction progress, create an historical record of the project and establish prediction of completion date(s) based upon current status. The Contractor is responsible to gather all supporting documentation propose the update data for the schedule and record the meeting minutes. All progress payment amounts will be derived from and tied to the cost-loaded schedule activities. Submit at monthly intervals a report of the actual construction progress by updating the required reports, the time scaled logic diagram, and mathematical analysis. Meeting to update the schedule

and the submission of an error free, acceptable updated schedule to the Government is a condition precedent to the processing of the Contractor's pay request. As a minimum, the following actions will be accomplished during the meeting:

a. Identify activities started and completed during the previous period and enter the Actual Start and Actual Finish dates.

b. Show estimated duration (in workdays) to complete each activity started but not completed (remaining duration).

c. Indicate percentage of cost payable for each activity.

d. Reflect changes in the network diagram. All changes (i.e., duration changes, logic changes, new logic, conformed change orders, new activities, changes due to Conformed Modifications, changes in work sequence, etc.) shall be recorded and a note added to the activity log field. The log shall include as a minimum, the date and reason for the change, and description of the change.

e. Submit two copies of a Narrative Report describing: 1) Progress made in each area of the project; 2) Changes in the following; activities, original durations, logic interdependencies, milestones, planned sequence of operations, critical path, and resource and loading; 3) Pending items and status thereof, including permits, change orders, and time extensions; 4) Status of Contract Completion Date and interim milestones; 5) Current and anticipated delays (describe cause of the delay and corrective action(s)); and 6) Description of current and future schedule problem areas. Each entry in the narrative report will cite the respective Activity ID and Activity Description.

f. Submit two copies of the required reports listed in paragraph entitled "Required Reports".

g. Submit two copies of the Update Meeting minutes.

1.7.7 As-Built Schedule

As a condition precedent to the release of retention, the last update of the schedule submitted shall be identified by the Contractor as the "As-Built Schedule". The As Built shall reflect the exact manner in which the project was actually constructed (including actual start and finish dates, activities, sequences, and logic) and shall be certified by the Contractor's Project Manager and Construction Scheduler as being a true reflection of the way the project was actually constructed. If more than one person filled the position(s) during the course of the project, each person will provide certification for the period of time they were responsible.

1.8 CONTRACT MODIFICATION

When a contract modification to the work is required, submit proposed revisions to the network with a fragmentary network and a cost proposal for

each proposed change. All modifications shall be incorporated into the network analysis system as separately identifiable activities broken down and inserted appropriately on the first update following issuance of a directive to proceed with the change. Submit one copy of the Total Float Report, Log Report and a copy of the proposed Time Impact Analysis on disk, with the cost proposal. Unless the Contracting Officer requests otherwise, only conformed contract modification fragmentary networks will be added into the subsequent monthly updates. All revisions to the current baseline schedule activities that are necessary to further refine the schedule so that the changed work activities can be logically tied to the schedule shall be made. Financial data shall not be incorporated into the schedule until the contract modification is signed by the Contracting Officer.

1.8.1 Time Impact Analysis:

Time Impact Analysis shall be used by the Contracting Officer in determining if a time extension or reduction to the contract milestone date(s) is justified. The Contractor shall provide a Time Impact Analysis to the Contracting Officer for any proposed contract change or as support for a Value Engineering Proposal, Claim or Request for Equitable Adjustment by the Contractor.

a. The Contractor shall submit a Time Impact Analysis (TIA) illustrating the influence of each change or delay on the Contract Completion Date or milestones. Unless the Contracting Officer requests an interim update to the schedule, the current monthly updated schedule accepted by the government shall be used to display the impacts of the change. Unless requested by the Contracting Officer, no other non-conformed changes will be incorporated into the schedule being used to justify the change impact.

b. Each TIA shall include a Fragmentary Network (fragnet) demonstrating how the Contractor proposes to incorporate the impact into the Project Schedule. A fragnet is defined as the sequence of new activities and/or activity revisions, logic relationships and resource changes that are proposed to be added to the existing schedule to demonstrate the influence of impacts to the schedule. The fragnet shall identify the predecessors to the new activities and demonstrate the impacts to successor activities. Include a narrative report describing the effects of new activities and relationships to interim and contract completion dates, with each TIA.

c. Following the Contractor's receipt of a contract modification on a Standard Form 30 signed by the Government; all changes in the fragnet used to determine impacts, shall be incorporated into the schedule. Changes will occur during the next monthly schedule update meeting.

1.8.2 No Reservation-Of-Rights

All direct costs, indirect costs, and time extensions will be negotiated and made full, equitable and final at the time of modification issuance.

1.9 CHANGES TO THE NETWORK ANALYSIS SCHEDULE

If changes in the method of operating and scheduling are desired, the Contracting Officer shall be notified in writing stating the reasons for the change. If the Contracting Officer considers these changes to be of a major nature, the Contractor may be required to revise and submit for acceptance, without additional cost to the Government, the network diagrams and required sorts. A change may be considered of a major nature if the estimated time required or actually used for an activity or the network logic is varied from the original plan to a degree that there is a reasonable doubt as to the effect on the contract completion date(s). Changes that affect activities with adequate float time shall be considered a major change when their cumulative effect could extend the contract completion date.

1.10 FLOAT

Use of float suppression techniques, such as; preferential sequencing (arranging critical path through activities more susceptible to government caused delay), special lead/lag logic restraints, zero total or free float constraints, extended activity times, or imposing constraint dates other than as required by the contract, shall be cause for rejection of the project schedule or its updates. The use of Resource Leveling (or similar software features) used for the purpose of artificially adjusting activity durations to consume float and influence the critical path is expressly prohibited.

1.10.1 Definitions of Float or Slack

Free Float is the length of time the start of an activity can be delayed without delaying the start of a successor activity. Total Float is the length of time along a given network path that the actual start and finish of activity(s) can be delayed without delaying the project completion date. Project Float is the length of time between the Contractor's Early Completion (or Substantial Completion) and the Contract Completion Date.

1.10.2 Ownership of Float

Float available in the schedule, at any time shall not be considered for the exclusive use of either the Government or the Contractor. During the course of contract execution, any float generated due to the efficiencies of either party is not for the sole use of the party generating the float; rather it is a shared commodity to be reasonably used by either party. Efficiencies gained as a result of favorable weather within a calendar month, where the number of days of normally anticipated weather is less than expected, will also contribute to the reserve of float. A schedule showing work completing in less time than the Contract time, and accepted by the Government, will be considered to have Project Float. Project Float will be a resource available to both the Government and the Contractor. No time extensions will be granted nor delay damages paid unless a delay occurs which impacts the Project's critical path, consumes all available float or contingency time, and extends the work beyond the Contract Completion Date.

1.10.3 Negative Float

Negative float will not be a basis for requesting time extensions. Any extension of time will be addressed in accordance with the Paragraph "Time Extensions". Scheduled completion date(s) that extend beyond the contract completion date(s) (evidenced by negative float) may be used in computations for assessment of payment withholdings. The use of this computation is not to be construed as a means of acceleration.

1.11 TIME EXTENSIONS

Extension of time for performance required under the clauses entitled "Changes," "Differing Site Conditions," "Default (Fixed-Price Construction)" or "Suspension of Work" will be granted only to the extent that equitable time adjustments for the activity or activities affected exceed the total float or slack along the network paths involved at the time Notice to Proceed was issued for the change. The Contractor acknowledges and agrees that delays in activities which, according to the network analysis schedule, does not in fact actually affect any milestone completion dates or the contract completion date shown on the CPM network at the time of delay, will not be a basis for a contract extension. Submit time extension requests with a Time Impact Analysis and three copies of the Total Float (or Slack) Report, Narrative Report and Log Report.

1.12 MONTHLY COORDINATION MEETING

In conjunction with receipt of the Monthly Network Update submission, a coordination meeting will be held each month in the Contracting Officer's conference room to discuss the report. The Contractor shall make a presentation of the previously submitted and current Monthly Network Update to the Contracting Officer so as to provide an overview of the project's schedule and provide an opportunity to discuss items of coordination.

1.13 BIWEEKLY WORK SCHEDULE

To provide a more detailed day-to-day planning of upcoming work, the Contractor shall prepare and issue detailed work plans that coordinate with and supplement the above defined network analysis. The work plans shall be keyed to the CPM activity numbers and shall be submitted each week and shall show the projects activities that will occur during the following two-week interval. Additionally, the critical path activities are to be identified on the Biweekly Work Plan. The detail work plans are to be bar chart type schedules prepared by the Contractor in sufficient detail to define the work to be accomplished, the crews, construction tools and equipment to be used during the current and next two-week interval. The bar charts shall be formatted to allow reproduction on 8 1/2 by 11 sheets. Three copies of the bar chart schedules shall be delivered to the Contracting Officer not less than 3 work hours prior to the start of the weekly coordination meeting.

1.14 CORRESPONDENCE AND TEST REPORTS

All correspondence (e.g., letters, Requests for Information (RFIs),

e-mails, meeting minutes, Production and QC Daily Reports, material delivery tickets, photographs, etc.) shall reference the Schedule Activity Number(s) that are being addressed. All test reports (e.g., concrete, soil compaction, weld, pressure, etc.) shall reference the Schedule Activity Number(s) that are being addressed.

PART 2 PRODUCTS

Not used.

PART 3 EXECUTION

Not used.

-- End of Section --

SECTION TABLE OF CONTENTS

DIVISION 01 - GENERAL REQUIREMENTS

SECTION 01330

SUBMITTAL PROCEDURES

PART 1 GENERAL

1.1 SUMMARY
1.1.1 Government-Furnished Information
1.2 DEFINITIONS
1.2.1 Submittal
1.2.2 Types of Submittals
1.3 SUBMITTAL IDENTIFICATION (SD)
1.3.1 Approving Authority
1.3.2 Work
1.4 SUBMITTALS
1.5 USE OF SUBMITTAL REGISTER DATABASE
1.5.1 Submittal Register
1.5.2 Contractor Use of Submittal Register
1.5.3 Approving Authority Use of Submittal Register
1.5.4 Contractor Action Code and Action Code
1.5.5 Copies Delivered to the Government
1.6 PROCEDURES FOR SUBMITTALS
1.6.1 Reviewing, Certifying, Approving Authority
1.6.2 Constraints
1.6.3 Scheduling
1.6.4 Variations
1.6.4.1 Considering Variations
1.6.4.2 Proposing Variations
1.6.4.3 Warranting That Variations Are Compatible
1.6.4.4 Review Schedule Is Modified
1.6.5 Contractor's Responsibilities
1.6.6 QC Organization Responsibilities
1.6.7 Government's Responsibilities
1.6.8 Actions Possible
1.7 FORMAT OF SUBMITTALS
1.7.1 Transmittal Form
1.7.2 Identifying Submittals
1.7.3 Format for Product Data
1.7.4 Format for Shop Drawings
1.7.5 Format of Samples
1.7.6 Format of Administrative Submittals
1.8 QUANTITY OF SUBMITTALS
1.8.1 Number of Copies of Product Data
1.8.2 Number of Copies of Shop Drawings
1.8.3 Number of Samples
1.8.4 Number of Copies of Administrative Submittals
1.9 FORWARDING SUBMITTALS
1.9.1 Samples Required of the Contractor
1.9.2 Shop Drawings, Product Data, and O&M Data
1.10 SUBMITTAL CLASSIFICATION
1.10.1 Government Approved
1.10.2 Information Only

1.11 APPROVED SUBMITTALS
1.12 DISAPPROVED SUBMITTALS
1.13 WITHHOLDING OF PAYMENT
1.14 GENERAL
1.15 SUBMITTAL REGISTER
1.16 SCHEDULING
1.17 TRANSMITTAL FORM (ENG FORM 4025)
1.18 SUBMITTAL PROCEDURES
1.18.1 Procedures
1.18.2 Deviations
1.19 CONTROL OF SUBMITTALS
1.20 GOVERNMENT APPROVED SUBMITTALS
1.21 INFORMATION ONLY SUBMITTALS
1.22 STAMPS

PART 2 PRODUCTS

PART 3 EXECUTION

-- End of Section Table of Contents --

SECTION 01330

SUBMITTAL PROCEDURES

PART 1 GENERAL

1.1 SUMMARY

1.1.1 Government-Furnished Information

Submittal register database and submittal management program will be delivered to the contractor, by contracting officer on 3 1/2 inch disk. Register will have the following fields completed, to the extent that will be required by the Government during subsequent usage.

Column (c): Lists specification section in which submittal is required.

Column (d): Lists each submittal description (SD No. and type, e.g. SD-04 Drawings) required in each specification section.

Column (e): Lists one principal paragraph in specification section where a material or product is specified. This listing is only to facilitate locating submitted requirements. Do not consider entries in column (e) as limiting project requirements.

Column (f): Indicate approving authority for each submittal. A "G" indicates approval by contracting officer; a blank indicates approval by QC manager.

The database and submittal management program will be extractable from the disk furnished to contractor, for operation on contractor's IBM compatible personal computer with 640kb RAM,a hard drive,and 3 1/2 inch high density floppy disk drive.

1.2 DEFINITIONS

1.2.1 Submittal

Shop drawings, product data, samples, and administrative submittals presented for review and approval. Contract Clauses "FAR 52.236-5, Material and Workmanship," paragraph (b) and "FAR 52.236-21, Specifications and Drawings for Construction," paragraphs (d), (e), and (f) apply to all "submittals."

1.2.2 Types of Submittals

All submittals are classified as indicated in paragraph "Submittal Descriptions (SD)". Submittals also are grouped as follows:

a. Shop drawings: As used in this section, drawings, schedules, diagrams, and other data prepared specifically for this contract, by contractor or through contractor by way of subcontractor, manufacturer, supplier, distributor, or other lower tier contractor, to illustrate portion of work.

b. Product data: Preprinted material such as illustrations, standard schedules, performance charts, instructions, brochures, diagrams, manufacturer's descriptive literature, catalog data, and other data to illustrate portion of work, but not prepared exclusively for this contract.

c. Samples: Physical examples of products, materials, equipment, assemblies, or workmanship that are physically identical to portion of work, illustrating portion of work or establishing standards for evaluating appearance of finished work or both.

d. Administrative submittals: Data presented for reviews and approval to ensure that administrative requirements of project are adequately met but not to ensure directly that work is in accordance with design concept and in compliance with contract documents.

1.3 SUBMITTAL IDENTIFICATION (SD)
Submittals required are identified by SD numbers and titles as follows:

SD-01 Preconstruction Submittals

Certificates of insurance.
Surety bonds.
List of proposed subcontractors.
List of proposed products.
Construction Progress Schedule.
Submittal schedule.
Schedule of values.
Health and safety plan.
Work plan.
Quality control plan.
Environmental protection plan.

SD-02 Shop Drawings

Drawings, diagrams and schedules specifically prepared to illustrate some portion of the work.

Diagrams and instructions from a manufacturer or fabricator for use in producing the product and as aids to the contractor for integrating the product or system into the project.

Drawings prepared by or for the contractor to show how multiple systems and interdisciplinary work will be coordinated.

SD-03 Product Data

Catalog cuts, illustrations, schedules, diagrams, performance charts, instructions and brochures illustrating size, physical appearance and other characteristics of materials or equipment for some portion of the work.

Samples of warranty language when the contract requires extended product warranties.

SD-04 Samples

Physical examples of materials, equipment or workmanship that

illustrate functional and aesthetic characteristics of a material or product and establish standards by which the work can be judged.

Color samples from the manufacturer's standard line (or custom color samples if specified) to be used in selecting or approving colors for the project.

Field samples and mock-ups constructed on the project site establish standards by which the ensuring work can be judged. Includes assemblies or portions of assemblies which are to be incorporated into the project and those which will be removed at conclusion of the work.

SD-05 Design Data

Calculations, mix designs, analyses or other data pertaining to a part of work.

SD-06 Test Reports

Report signed by authorized official of testing laboratory that a material, product or system identical to the material, product or system to be provided has been tested in accord with specified requirements. (Testing must have been within three years of date of contract award for the project.)

Report which includes findings of a test required to be performed by the contractor on an actual portion of the work or prototype prepared for the project before shipment to job site.

Report which includes finding of a test made at the job site or on sample taken from the job site, on portion of work during or after installation.

Investigation reports

Daily checklists

Final acceptance test and operational test procedure

SD-07 Certificates

Statements signed by responsible officials of manufacturer of product, system or material attesting that product, system or material meets specification requirements. Must be dated after award of project contract and clearly name the project.

Document required of Contractor, or of a supplier, installer or subcontractor through Contractor, the purpose of which is to further quality of orderly progression of a portion of the work by documenting procedures, acceptability of methods or personnel qualifications.

Confined space entry permits.

SD-08 Manufacturer's Instructions

Preprinted material describing installation of a product, system or material, including special notices and Material Safety Data sheets concerning impedances, hazards and safety precautions.

SD-09 Manufacturer's Field Reports

Documentation of the testing and verification actions taken by manufacturer's representative to confirm compliance with manufacturer's standards or instructions.

Factory test reports.

SD-10 Operation and Maintenance Data

Data intended to be incorporated in operations and maintenance manuals.

SD-11 Closeout Submittals

Documentation to record compliance with technical or administrative requirements or to establish an administrative mechanism.

As-built drawings.

Special warranties.

Posted operating instructions.

Training plan.

1.3.1 Approving Authority

Person authorized to approve submittal.

1.3.2 Work

As used in this section, on- and off-site construction required by contract documents, including labor necessary to produce construction and materials, products, equipment, and systems incorporated or to be incorporated in such construction.

1.4 SUBMITTALS

Submit the following in accordance with the requirements of this section.

SD-01 Preconstruction Submittals

Submittal register; G

1.5 USE OF SUBMITTAL REGISTER DATABASE

Prepare and maintain submittal register, as the work progresses. Use electronic submittal register program furnished by the Government or any other format. Do not change data which is output in columns (c), (d), (e), and (f) as delivered by government; retain data which is output in columns (a), (g), (h), and (i) as approved.

1.5.1 Submittal Register

Submit submittal register as an electronic database, using submittals management program furnished to contractor. Submit with quality control plan and project schedule required by Section 01451, "CONTRACTOR QUALITY CONTROL" and Section 01321N, "Network Analysis Schedules." Do not change data in columns (c), (d), (e), and (f) as delivered by the government.

Verify that all submittals required for project are listed and add missing submittals. Complete the following on the register database:

Column (a) Activity Number: Activity number from the project schedule.

Column (g) Contractor Submit Date: Scheduled date for approving authority to receive submittals.

Column (h) Contractor Approval Date: Date contractor needs approval of submittal.

Column (i) Contractor Material: Date that contractor needs material delivered to contractor control.

1.5.2 Contractor Use of Submittal Register

Update the following fields in the government-furnished submittal register program or equivalent fields in program utilized by contractor.

Column (b) Transmittal Number: Contractor assigned list of consecutive numbers.

Column (j) Action Code (k): Date of action used to record contractor's review when forwarding submittals to QC.

Column (l) List date of submittal transmission.

Column (q) List date approval received.

1.5.3 Approving Authority Use of Submittal Register

Update the following fields in the government-furnished submittal register program or equivalent fields in program utilized by contractor.

Column (b).

Column (l) List date of submittal receipt.

Column (m) through (p).

Column (q) List date returned to contractor.

1.5.4 Contractor Action Code and Action Code

Entries used will be as follows (others may be prescribed by Transmittal Form):

NR - Not Received

AN - Approved as noted

A - Approved

RR - Disapproved, Revise, and Resubmit

1.5.5 Copies Delivered to the Government

Deliver one copy of submitted register updated by contractor to government with each invoice request. Deliver in electronic format, unless a paper

copy is requested by contracting officer.

1.6 PROCEDURES FOR SUBMITTALS

1.6.1 Reviewing, Certifying, Approving Authority

QC organization shall be responsible for reviewing and certifying that submittals are in compliance with contract requirements. Approving authority on submittals is QC manager unless otherwise specified for specific submittal. At each "Submittal" paragraph in individual specification sections, a notation "G," following a submittal item, indicates contracting officer is approving authority for that submittal item.

1.6.2 Constraints

a. Submittals listed or specified in this contract shall conform to provisions of this section, unless explicitly stated otherwise.

b. Submittals shall be complete for each definable feature of work; components of definable feature interrelated as a system shall be submitted at same time.

c. When acceptability of a submittal is dependent on conditions, items, or materials included in separate subsequent submittals, submittal will be returned without review.

d. Approval of a separate material, product, or component does not imply approval of assembly in which item functions.

1.6.3 Scheduling

a. Coordinate scheduling, sequencing, preparing and processing of submittals with performance of work so that work will not be delayed by submittal processing. Allow for potential requirements to resubmit.

b. Except as specified otherwise, allow review period, beginning with receipt by approving authority, that includes at least 15 working days for submittals for QC manager approval and 20 working days for submittals for contracting officer approval. Period of review for submittals with contracting officer approval begins when Government receives submittal from QC organization. Period of review for each resubmittal is the same as for initial submittal.

1.6.4 Variations

Variations from contract requirements require Government approval pursuant to contract Clause entitled "FAR 52.236-21, Specifications and Drawings for Construction" and will be considered where advantageous to government.

1.6.4.1 Considering Variations

Discussion with contracting officer prior to submission, will help ensure functional and quality requirements are met and minimize rejections and resubmittals. When contemplating a variation which results in lower cost, consider submission of the variation as a Value Engineering Change Proposal (VECP).

1.6.4.2 Proposing Variations

When proposing variation, deliver written request to the contracting officer, with documentation of the nature and features of the variation and why the variation is desirable and beneficial to government. If lower cost is a benefit, also include an estimate of the cost saving. In addition to documentation required for variation, include the submittals required for the item. Clearly mark the proposed variation in all documentation.

1.6.4.3 Warranting That Variations Are Compatible

When delivering a variation for approval, contractor warrants that this contract has been reviewed to establish that the variation, if incorporated, will be compatible with other elements of work.

1.6.4.4 Review Schedule Is Modified

In addition to normal submittal review period, a period of 10 working days will be allowed for consideration by the Government of submittals with variations.

1.6.5 Contractor's Responsibilities

a. Determine and verify field measurements, materials, field construction criteria; review each submittal; and check and coordinate each submittal with requirements of the work and contract documents.

b. Transmit submittals to QC organization in accordance with schedule on approved Submittal Register, and to prevent delays in the work, delays to government, or delays to separate contractors.

c. Advise contracting officer of variation, as required by paragraph entitled "Variations."

d. Correct and resubmit submittal as directed by approving authority. When resubmitting disapproved transmittals or transmittals noted for resubmittal, the contractor shall provide copy of that previously submitted transmittal including all reviewer comments for use by approving authority. Direct specific attention in writing or on resubmitted submittal, to revisions not requested by approving authority on previous submissions.

e. Furnish additional copies of submittal when requested by contracting officer, to a limit of 20 copies per submittal.

f. Complete work which must be accomplished as basis of a submittal in time to allow submittal to occur as scheduled.

g. Ensure no work has begun until submittals for that work have been returned as "approved," or "approved as noted", except to the extent that a portion of work must be accomplished as basis of submittal.

1.6.6 QC Organization Responsibilities

a. Note date on which submittal was received from contractor on each submittal.

b. Review each submittal; and check and coordinate each submittal with requirements of work and contract documents.

c. Review submittals for conformance with project design concepts and compliance with contract documents.

d. Act on submittals, determining appropriate action based on QC organization's review of submittal.

(1) When QC manager is approving authority, take appropriate action on submittal from the possible actions defined in paragraph entitled, "Actions Possible."

(2) When contracting officer is approving authority or when variation has been proposed, forward submittal to Government with certifying statement or return submittal marked "not reviewed" or "revise and resubmit" as appropriate. The QC organization's review of submittal determines appropriate action.

e. Ensure that material is clearly legible.

f. Stamp each sheet of each submittal with QC certifying statement or approving statement, except that data submitted in bound volume or on one sheet printed on two sides may be stamped on the front of the first sheet only.

(1) When approving authority is contracting officer, QC organization will certify submittals forwarded to contracting officer with the following certifying statement:

"I hereby certify that the (equipment) (material) (article) shown and marked in this submittal is that proposed to be incorporated with contract Number , is in compliance with the contract drawings and specification, can be installed in the allocated spaces, and is submitted for Government approval.

Certified by Submittal Reviewer _____, Date _____
(Signature when applicable)

Certified by QC manager _____, Date _____"
(Signature)

(2) When approving authority is QC manager, QC manager will use the following approval statement when returning submittals to contractor as "Approved" or "Approved as Noted."

"I hereby certify that the (material) (equipment) (article) shown and marked in this submittal and proposed to be incorporated with contract Number , is in compliance with the contract drawings and specification, can be installed in the allocated spaces, and is _____ approved for use.

Certified by Submittal Reviewer _____, Date _____
(Signature when applicable)

Approved by QC manager _____, Date _____"
(Signature)

g. Sign certifying statement or approval statement. The person

signing certifying statements shall be QC organization member designated in the approved QC plan. The signatures shall be in original ink. Stamped signatures are not acceptable.

h. Update submittal register database as submittal actions occur and maintain the submittal register at project site until final acceptance of all work by contracting officer.

i. Retain a copy of approved submittals at project site, including contractor's copy of approved samples.

1.6.7 Government's Responsibilities

When approving authority is contracting Officer, the Government will:

a. Note date on which submittal was received from QC manager, on each submittal for which the contracting officer is approving authority.

b. Review submittals for approval within scheduling period specified and only for conformance with project design concepts and compliance with contract documents.

c. Identify returned submittals with one of the actions defined in paragraph entitled "Actions Possible" and with markings appropriate for action indicated.

1.6.8 Actions Possible

Submittals will be returned with one of the following notations:

a. Submittals marked "not reviewed" will indicate submittal has been previously reviewed and approved, is not required , does not have evidence of being reviewed and approved by contractor, or is not complete. A submittal marked "not reviewed" will be returned with an explanation of the reason it is not reviewed. Resubmit submittals returned for lack of review by contractor or for being incomplete, with appropriate action, coordination, or change.

b. Submittals marked "approved" "approved as submitted" authorize contractor to proceed with work covered.

c. Submittals marked "approved as noted" or "approval except as noted; resubmission not required" authorize contractor to proceed with work as noted provided contractor takes no exception to the notations.

d. Submittals marked "revise and resubmit" or "disapproved" indicate submittal is incomplete or does not comply with design concept or requirements of the contract documents and shall be resubmitted with appropriate changes. No work shall proceed for this item until resubmittal is approved.

1.7 FORMAT OF SUBMITTALS

1.7.1 Transmittal Form

Transmit each submittal, except sample installations and sample panels, to office of approving authority. Transmit submittals with transmittal form prescribed by contracting officer and standard for project. The

transmittal form shall identify contractor, indicate date of submittal, and include information prescribed by transmittal form and required in paragraph entitled "Identifying Submittals." Process transmittal forms to record actions regarding sample panels and sample installations.

1.7.2 Identifying Submittals

Identify submittals, except sample panel and sample installation, with the following information permanently adhered to or noted on each separate component of each submittal and noted on transmittal form. Mark each copy of each submittal identically, with the following:

a. Project title and location.

b. Construction contract number.

c. Section number of the specification section by which submittal is required.

d. Submittal description (SD) number of each component of submittal.

e. When a resubmission, add alphabetic suffix on submittal description, for example, SD-10A, to indicate resubmission.

f. Name, address, and telephone number of subcontractor, supplier, manufacturer and any other second tier contractor associated with submittal.

g. Product identification and location in project.

1.7.3 Format for Product Data

a. Present product data submittals for each section as a complete, bound volume. Include table of contents, listing page and catalog item numbers for product data.

b. Indicate, by prominent notation, each product which is being submitted; indicate specification section number and paragraph number to which it pertains.

c. Supplement product data with material prepared for project to satisfy submittal requirements for which product data does not exist. Identify this material as developed specifically for project.

d. Provide product data in metric dimensions. Where product data are included in preprinted catalogues with inch-pound units only, submit metric dimensions on separate sheet.

1.7.4 Format for Shop Drawings

a. Shop drawings shall not be less than A4 (297 by 210 mm) nor more than AO (1189 by 841 mm).

b. Present A4 (297 by 210 mm) sized shop drawings as part of the bound volume for submittals required by section. Present larger drawings in sets.

c. Include on each drawing the drawing title, number, date, and

revision numbers and dates, in addition to information required in paragraph entitled "Identifying Submittals."

d. Dimension drawings, except diagrams and schematic drawings; prepare drawings demonstrating interface with other trades to scale. Shop drawing dimensions shall be the same unit of measure as indicated on the contract drawings. Identify materials and products for work shown.

1.7.5 Format of Samples

a. Furnish samples in sizes below, unless otherwise specified or unless the manufacturer has prepackaged samples of approximately same size as specified:

(1) Sample of Equipment or Device: Full size.

(2) Sample of Materials Less Than 50 by 75 mm: Built up to A4 (297 by 210 mm).

(3) Sample of Materials Exceeding A4 (297 by 210 mm): Cut down to A4 (297 by 210 mm) and adequate to indicate color, texture, and material variations.

(4) Sample of Linear Devices or Materials: 250 mm length or length to be supplied, if less than 250 mm. Examples of linear devices or materials are conduit and handrails.

(5) Sample of Non-Solid Materials: 750 ml. Examples of non-solid materials are sand and paint.

(6) Color Selection Samples: 50 by 100 mm.

(7) Sample Panel: 1200 by 1200 mm.

(8) Sample Installation: 10 square meters.

b. Samples Showing Range of Variation: Where variations are unavoidable due to nature of the materials, submit sets of samples of not less than three units showing extremes and middle of range.

c. Reusable Samples: Incorporate returned samples into work only if so specified or indicated. Incorporated samples shall be in undamaged condition at time of use.

d. Recording of Sample Installation: Note and preserve the notation of area constituting sample installation but remove notation at final clean up of project.

e. When color, texture or pattern is specified by naming a particular manufacturer and style, include one sample of that manufacturer and style, for comparison.

1.7.6 Format of Administrative Submittals

a. When submittal includes a document which is to be used in project or become part of project record, other than as a submittal, do not apply contractor's approval stamp to document, but to a separate sheet accompanying document.

b. Provide all dimensions in administrative submittals in metric. Where data are included in preprinted material with inch-pound units only, submit metric dimensions on separate sheet.

1.8 QUANTITY OF SUBMITTALS

1.8.1 Number of Copies of Product Data

a. Submit six copies of submittals of product data requiring review and approval only by QC organization and seven copies of product data requiring review and approval by contracting officer.

1.8.2 Number of Copies of Shop Drawings

Submit shop drawings in compliance with quantity requirements specified for product data.

1.8.3 Number of Samples

a. Submit two samples, or two sets of samples showing range of variation, of each required item. One approved sample or set of samples will be retained by approving authority and one will be returned to contractor.

b. Submit one sample panel. Include components listed in technical section or as directed.

c. Submit one sample installation, where directed.

d. Submit one sample of non-solid materials.

1.8.4 Number of Copies of Administrative Submittals

a. Unless otherwise specified, submit administrative submittals compliance with quantity requirements specified for product data.

1.9 FORWARDING SUBMITTALS

1.9.1 Samples Required of the Contractor

Submit samples to Contracting Officer.

1.9.2 Shop Drawings, Product Data, and O&M Data

As soon as practicable after award of contract, and before procurement of fabrication, submit, except as specified otherwise, to the Contracting Officer the shop drawings, product data and O&M Data required in the technical sections of this specification. The Architect-Engineer for this project will review and provide surveillance for the Contracting Officer to determine if Contractor-approved submittals comply with the contract requirements, and will review and approve for the Contracting Officer those submittals not permitted to be Contractor approved to determine if submittals comply with the contract requirements. One copy of the transmittal form for submittals shall be forwarded to the Resident Officer in Charge of Construction

1.10 SUBMITTAL CLASSIFICATION

Submittals are classified as follows:

1.10.1 Government Approved

Government approval is required for extensions of design, critical materials, deviations, equipment whose compatibility with the entire system must be checked, and other items as designated by the Contracting Officer. Within the terms of the Contract Clause entitled "Specifications and Drawings for Construction," they are considered to be "shop drawings."

1.10.2 Information Only

All submittals not requiring Government approval will be for information only. They are not considered to be "shop drawings" within the terms of the Contract Clause referred to above.

1.11 APPROVED SUBMITTALS

The Contracting Officer's approval of submittals shall not be construed as a complete check, but will indicate only that the general method of construction, materials, detailing and other information are satisfactory. Approval will not relieve the Contractor of the responsibility for any error which may exist, as the Contractor under the Contractor Quality Control (CQC) requirements of this contract is responsible for dimensions, the design of adequate connections and details, and the satisfactory construction of all work. After submittals have been approved by the Contracting Officer, no resubmittal for the purpose of substituting materials or equipment will be considered unless accompanied by an explanation of why a substitution is necessary.

1.12 DISAPPROVED SUBMITTALS

The Contractor shall make all corrections required by the Contracting Officer and promptly furnish a corrected submittal in the form and number of copies specified for the initial submittal. If the Contractor considers any correction indicated on the submittals to constitute a change to the contract, a notice in accordance with the Contract Clause "Changes" shall be given promptly to the Contracting Officer.

1.13 WITHHOLDING OF PAYMENT

Payment for materials incorporated in the work will not be made if required approvals have not been obtained.

1.14 GENERAL

The Contractor shall make submittals as required by the specifications. The Contracting Officer may request submittals in addition to those specified when deemed necessary to adequately describe the work covered in the respective sections. Units of weights and measures used on all submittals shall be the same as those used in the contract drawings. Each submittal shall be complete and in sufficient detail to allow ready determination of compliance with contract requirements. Prior to submittal, all items shall be checked and approved by the Contractor's Quality Control (CQC) System Manager and each item shall be stamped, signed, and dated by the CQC System Manager indicating action taken. Proposed deviations from the contract requirements shall be clearly identified. Submittals shall include items such as: Contractor's, manufacturer's, or fabricator's drawings; descriptive literature including

(but not limited to) catalog cuts, diagrams, operating charts or curves; test reports; test cylinders; samples; O&M manuals (including parts list); certifications; warranties; and other such required submittals. Submittals requiring Government approval shall be scheduled and made prior to the acquisition of the material or equipment covered thereby. Samples remaining upon completion of the work shall be picked up and disposed of in accordance with manufacturer's Material Safety Data Sheets (MSDS) and in compliance with existing laws and regulations.

1.15 SUBMITTAL REGISTER

At the end of this section is a submittal register showing items of equipment and materials for which submittals are required by the specifications; this list may not be all inclusive and additional submittals may be required. The Contractor shall maintain a submittal register for the project.

1.16 SCHEDULING

Submittals covering component items forming a system or items that are interrelated shall be scheduled to be coordinated and submitted concurrently. Certifications to be submitted with the pertinent drawings shall be so scheduled. Adequate time (a minimum of 30 calendar days exclusive of mailing time) shall be allowed and shown on the register for review and approval. No delay damages or time extensions will be allowed for time lost in late submittals.

1.17 TRANSMITTAL FORM (ENG FORM 4025)

The sample transmittal form (ENG Form 4025) attached to this section shall be used for submitting both Government approved and information only submittals in accordance with the instructions on the reverse side of the form. These forms are included in the RMS-QC software that the Contractor is required to use for this contract. This form shall be properly completed by filling out all the heading blank spaces and identifying each item submitted. Special care shall be exercised to ensure proper listing of the specification paragraph and/or sheet number of the contract drawings pertinent to the data submitted for each item.

1.18 SUBMITTAL PROCEDURES

Submittals shall be made as follows:

1.18.1 Procedures

The Contractor shall complete ENG Form 4025, "Transmittal of Shop Drawings, Equipment Data, Material Samples, or Manufacturer's Certificate of Compliance" with each set of shop drawings, certificates, equipment data of samples submitted. A blank ENG Form 4025 will be furnished by the Contracting Officer on request. Six (6) copies of each submittal will be required.

1.18.2 Deviations

For submittals which include proposed deviations requested by the Contractor, the column "variation" of ENG Form 4025 shall be checked. The Contractor shall set forth in writing the reason for any deviations and annotate such deviations on the submittal. The Government reserves the right to rescind inadvertent approval of submittals containing unnoted

deviations.

1.19 CONTROL OF SUBMITTALS

The Contractor shall carefully control his procurement operations to ensure that each individual submittal is made on or before the Contractor scheduled submittal date shown on the approved "Submittal Register."

1.20 GOVERNMENT APPROVED SUBMITTALS

Upon completion of review of submittals requiring Government approval, the submittals will be identified as having received approval by being so stamped and dated. Four copies of the submittal will be retained by the Contracting Officer and two copies of the submittal will be returned to the Contractor.

1.21 INFORMATION ONLY SUBMITTALS

Normally submittals for information only will not be returned. Approval of the Contracting Officer is not required on information only submittals. The Government reserves the right to require the Contractor to resubmit any item found not to comply with the contract. This does not relieve the Contractor from the obligation to furnish material conforming to the plans and specifications; will not prevent the Contracting Officer from requiring removal and replacement of nonconforming material incorporated in the work; and does not relieve the Contractor of the requirement to furnish samples for testing by the Government laboratory or for check testing by the Government in those instances where the technical specifications so prescribe.

1.22 STAMPS

Stamps used by the Contractor on the submittal data to certify that the submittal meets contract requirements shall be similar to the following:

CONTRACTOR
(Firm Name)
_____ Approved
_____ Approved with corrections as noted on submittal data and/or attached sheets(s).
SIGNATURE: _____
TITLE: _____
DATE: _____

PART 2 PRODUCTS

Not used.

PART 3 EXECUTION

Not used.

-- End of Section --

SUBMITTAL REGISTER

CONTRACT NO.

TITLE AND LOCATION
F1 Channel (Hualapai Way to Beltway)

CONTRACTOR

ACTIVITY NO	TRANSMITTAL NO	SPEC SECT	DESCRIPTION ITEM SUBMITTED	PARAGRAPH #	CLASSIFICATION	GOVT OR A/E REVWR	CONTRACTOR: SCHEDULE DATES			CONTRACTOR ACTION			APPROVING AUTHORITY					
							SUBMIT	APPROVAL NEEDED BY	MATERIAL NEEDED BY	ACTION CODE	DATE OF ACTION	DATE FWD TO APPR AUTH/ DATE RCD FROM CONTR	DATE FWD TO OTHER REVIEWER	DATE RCD FROM OTH REVIEWER	ACTION CODE	DATE OF ACTION	MAILED TO CONTR/ DATE RCD FRM APPR AUTH	REMARKS
(a)	(b)	(c)	(d)	(e)	(f)		(g)	(h)	(i)	(j)	(k)	(l)	(m)	(n)	(o)	(p)	(q)	(r)
		01321	SD-01 Preconstruction Submittals															
			Qualifications	1.5	G													
			Standard Activity Coding	1.6.2.5	FIO													
			Dictionary															
			Schedule Development Session	1.7.2	G													
			Scheduler/Planner															
			Network Analysis Schedule	1.7.3	G													
			Accepted Network Analysis	1.7.5	G													
			Schedule															
			SD-07 Certificates															
			Monthly Network Analysis	1.7.6	G													
			Updates															
			SD-11 Closeout Submittals															
			As-Built Schedule	1.7.7	G													
		01330	SD-01 Preconstruction Submittals															
			Submittal register	1.5.1	G													
		01355	SD-01 Preconstruction Submittals															
			Environmental Protection Plan	1.7	G													
		01356	SD-07 Certificates															
			Mill Certificate or Affidavit	2.1.3	FIO													
		01702	SD-11 Closeout Submittals															
			As-built Drawings		G													
		02300	SD-01 Preconstruction Submittals															
			Excavation Plan	3.1	G													
			Excavation Plan	3.1.1	G													
			Haul Route Plan		G													

SUBMITTAL REGISTER

CONTRACT NO.

TITLE AND LOCATION
F1 Channel (Hualapai Way to Beltway)

CONTRACTOR

ACTIVITY NO	TRANSMITTAL NO	SPEC SECT	DESCRIPTION ITEM SUBMITTED	PARAGRAPH #	CLASSIFICATION	GOVT OR A/E REVWR	CONTRACTOR: SCHEDULE DATES			CONTRACTOR ACTION			APPROVING AUTHORITY					
							SUBMIT	APPROVAL NEEDED BY	MATERIAL NEEDED BY	ACTION CODE	DATE OF ACTION	DATE FWD TO APPR AUTH/ DATE RCD FROM CONTR	DATE FWD TO OTHER REVIEWER	DATE RCD FROM OTH REVIEWER	ACTION CODE	DATE OF ACTION	MAILED TO CONTR/ DATE RCD FRM APPR AUTH	REMARKS
(a)	(b)	(c)	(d)	(e)	(f)		(g)	(h)	(i)	(j)	(k)	(l)	(m)	(n)	(o)	(p)	(q)	(r)
		02300	Field Density Tests		G													
			Treating of Compacted Fill		G													
			Materials															
			SD-02 Shop Drawings															
			Shop Drawings		G													
			Explosive Storage Locations		G													
			SD-05 Design Data															
			Blast Data		FIO													
		02316	SD-06 Test Reports															
			Field Density Tests	3.3.3	G													
			Testing of Backfill Materials	3.3.2	G													
		02510	SD-06 Test Reports															
			Bacteriological Disinfection	3.3.1	FIO													
			SD-07 Certificates															
			Waste Water Disposal Method		G													
			Installation	3.1	FIO													
			SD-08 Manufacturer's Instructions															
			Installation	3.1	G													
			SD-11 Closeout Submittals															
			Satisfactory Installation		FIO													
		02531	SD-06 Test Reports															
			Test Reports		FIO													
		02630	SD-07 Certificates															
			Pipeline Testing		G													
			Hydrostatic Test on Watertight	2.2	G													
			Joints															

SUBMITTAL REGISTER

CONTRACT NO.

TITLE AND LOCATION
F1 Channel (Hualapai Way to Beltway)

CONTRACTOR

ACTIVITY NO	TRANSMITTAL NO	SPEC SECT	DESCRIPTION ITEM SUBMITTED	PARAGRAPH #	CLASSIFICATION	GOVT OR A/E REVWR	CONTRACTOR: SCHEDULE DATES			CONTRACTOR ACTION			APPROVING AUTHORITY					MAILED TO CONTR/ DATE RCD FRM APPR AUTH	REMARKS
							SUBMIT	APPROVAL NEEDED BY	MATERIAL NEEDED BY	ACTION CODE	DATE OF ACTION	DATE FWD TO APPR AUTH/ DATE RCD FROM CONTR	DATE FWD TO OTHER REVIEWER	DATE RCD FROM OTH REVIEWER	ACTION CODE	DATE OF ACTION		
(a)	(b)	(c)	(d)	(e)	(f)		(g)	(h)	(i)	(j)	(k)	(l)	(m)	(n)	(o)	(p)	(q)	(r)
		02630	SD-08 Manufacturer's Instructions															
			Placing Pipe		G													
		02710	SD-04 Samples															
			Filter Fabric		FIO													
		02722	SD-03 Product Data															
			Plant, Equipment, and Tools	1.6	FIO													
			Waybills and Delivery Tickets		G													
			SD-06 Test Reports															
			Sampling and testing	1.4	G													
			Field Density Tests	1.4.2.4	G													
		02741	SD-03 Product Data															
			Mix Design	2.3	G													
			Contractor Quality Control	3.10	G													
			Material Acceptance and Percent	3.11	G													
			Payment															
			Aggregates	2.1	G													
			SD-06 Test Reports															
			Aggregates	2.1	G													
			QC Monitoring	3.10.2.10	G													
			SD-07 Certificates															
			Asphalt Cement Binder	2.2	G													
			Testing Laboratory	3.6	G													
			Certification of compliance		FIO													
			Plant Scale Calibration		FIO													
			Certification															
		02748	SD-06 Test Reports															

SUBMITTAL REGISTER

CONTRACT NO.

TITLE AND LOCATION
F1 Channel (Hualapai Way to Beltway)

CONTRACTOR

ACTIVITY NO	TRANSMITTAL NO	SPEC SECT	DESCRIPTION ITEM SUBMITTED	PARAGRAPH #	CLASSIFICATION	GOVT OR A/E REVWR	CONTRACTOR: SCHEDULE DATES			CONTRACTOR ACTION			APPROVING AUTHORITY					
							SUBMIT	APPROVAL NEEDED BY	MATERIAL NEEDED BY	ACTION CODE	DATE OF ACTION	DATE FWD TO APPR AUTH/ DATE RCD FROM CONTR	DATE FWD TO OTHER REVIEWER	DATE RCD FROM OTH REVIEWER	ACTION CODE	DATE OF ACTION	MAILED TO CONTR/ DATE RCD FRM APPR AUTH	REMARKS
(a)	(b)	(c)	(d)	(e)	(f)		(g)	(h)	(i)	(j)	(k)	(l)	(m)	(n)	(o)	(p)	(q)	(r)
		02748	Sampling and Testing	3.7	FIO													
		02821	SD-07 Certificates															
			Chain Link Fence	2.1.1	G													
		03101	SD-02 Shop Drawings															
			Shop Drawings	1.4	G													
			SD-03 Product Data															
			Materials	2.1	FIO													
			SD-06 Test Reports															
			Inspection	3.3	FIO													
			Formwork Not Supporting Weight	3.2.1	G													
			of Concrete															
		03151	SD-04 Samples															
			Field Molded Sealants and Primer	2.1.2.1	G													
			SD-06 Test Reports															
			Premolded Expansion Joint Filler	2.1.1	FIO													
			Strips															
			Compression Seals and Lubricant	2.1.2.2	FIO													
		03200	SD-02 Shop Drawings															
			Reinforcement	3.1	G													
			SD-07 Certificates															
			Reinforcing Steel	2.2	FIO													
		03301	SD-03 Product Data															
			Concrete Mixture Proportioning	2.2	FIO													
			Batch Plant	3.1.2	FIO													
			Placing Equipment	3.1.1	FIO													
			Tests and Inspections	3.7	FIO													

SUBMITTAL REGISTER

CONTRACT NO.

TITLE AND LOCATION
F1 Channel (Hualapai Way to Beltway)

CONTRACTOR

ACTIVITY NO	TRANSMITTAL NO	SPEC SECT	DESCRIPTION ITEM SUBMITTED	PARAGRAPH #	CLASSIFICATION	GOVT OR A/E REVWR	CONTRACTOR: SCHEDULE DATES			CONTRACTOR ACTION			APPROVING AUTHORITY					
							SUBMIT	APPROVAL NEEDED BY	MATERIAL NEEDED BY	ACTION CODE	DATE OF ACTION	DATE FWD TO APPR AUTH/ DATE RCD FROM CONTR	DATE FWD TO OTHER REVIEWER	DATE RCD FROM OTH REVIEWER	ACTION CODE	DATE OF ACTION	MAILED TO CONTR/ DATE RCD FRM APPR AUTH	REMARKS
(a)	(b)	(c)	(d)	(e)	(f)		(g)	(h)	(i)	(j)	(k)	(l)	(m)	(n)	(o)	(p)	(q)	(r)
		03301	Testing Technicians	3.7.1	FIO													
			Construction Joint Treatment	3.2.4	G													
			Curing and Protection	3.5	G													
			Cold-Weather Placing	3.3.4	G													
			Hot-Weather Placing	3.3.5	G													
			Finishing	3.4	G													
			SD-04 Samples															
			Aggregates	1.3.1.1	G													
			Cementitious Materials,	1.3.1.2	G													
			Admixtures, and Curing Compound															
			SD-06 Test Reports															
			Quality of Aggregates	3.7.2.3	G													
			Mixer Uniformity	3.7.2.13	FIO													
			Tests and Inspections	3.7	FIO													
			SD-07 Certificates															
			Cementitious Materials	2.1.1	FIO													
			Membrane-Forming Curing	2.1.4.1	FIO													
			Compound															
			Epoxy Resin	2.1.8	FIO													
			Latex Bonding Compound	2.1.7	FIO													
			Nonshrink Grout	2.1.6	FIO													
		05500	SD-02 Shop Drawings															
			Miscellaneous Metal Items	1.5	G													
		09900	SD-03 Product Data															
			Manufacturer's Technical Data	2.1	FIO													
			Sheets															

SUBMITTAL REGISTER

CONTRACT NO.

TITLE AND LOCATION
F1 Channel (Hualapai Way to Beltway)

CONTRACTOR

ACTIVITY NO	TRANSMITTAL NO	SPEC SECT	DESCRIPTION ITEM SUBMITTED	PARAGRAPH #	CLASSIFICATION	GOVT OR A/E REVWR	CONTRACTOR: SCHEDULE DATES			CONTRACTOR ACTION			APPROVING AUTHORITY					MAILED TO CONTR/ DATE RCD FRM APPR AUTH	REMARKS
							SUBMIT	APPROVAL NEEDED BY	MATERIAL NEEDED BY	ACTION CODE	DATE OF ACTION	DATE FWD TO APPR AUTH/ DATE RCD FROM CONTR	DATE FWD TO OTHER REVIEWER	DATE RCD FROM OTH REVIEWER	ACTION CODE	DATE OF ACTION		
(a)	(b)	(c)	(d)	(e)	(f)		(g)	(h)	(i)	(j)	(k)	(l)	(m)	(n)	(o)	(p)	(q)	(r)
		09900	SD-04 Samples															
			Color	1.8	G													
			SD-07 Certificates															
			Statements	1.3.1	FIO													
			Statements	1.3.1	FIO													
			SD-08 Manufacturer’s Instructions															
			Application instructions		FIO													
			Mixing		FIO													
			Manufacturer's Material Safety	1.6.2	FIO													
			Data Sheets															

TRANSMITTAL OF SHOP DRAWINGS, EQUIPMENT DATA, MATERIAL SAMPLES, OR MANUFACTURER'S CERTIFICATES OF COMPLIANCE *(Read instructions on the reverse side prior to initiating this form)*	DATE	TRANSMITTAL NO.

SECTION I - REQUEST FOR APPROVAL OF THE FOLLOWING ITEMS *(This section will be initiated by the contractor)*

TO:	FROM:	CONTRACT NO.	CHECK ONE: ☐ THIS IS A NEW TRANSMITTAL ☐ THIS IS A RESUBMITTAL OF TRANSMITTAL _____
SPECIFICATION SEC. NO. *(Cover only one section with each transmittal)*	PROJECT TITLE AND LOCATION		CHECK ONE: THIS TRANSMITTAL IS FOR ☐ FIO ☐ GOV'T. APPROVAL

ITEM NO. *a.*	DESCRIPTION OF ITEM SUBMITTED *(Type size, model number/etc.)*	MFG OR CONTR. CAT., CURVE DRAWING OR BROCHURE NO. *(See instruction no. 8)* *c.*	NO. OF COPIES *d.*	CONTRACT REFERENCE DOCUMENT		FOR CONTRACTOR USE CODE *g.*	VARIATION *(See instruction No. 6)* *h.*	FOR CE USE CODE *i.*
				SPEC. PARA. NO. *e.*	DRAWING SHEET NO. *f.*			

REMARKS

I certify that the above submitted items have been reviewed in detail and are correct and in strict conformance with the contract drawings and specifications except as other wise stated.

NAME AND SIGNATURE OF CONTRACTOR

SECTION II - APPROVAL ACTION

ENCLOSURES RETURNED *(List by Item No.)*	NAME, TITLE AND SIGNATURE OF APPROVING AUTHORITY	DATE

INSTRUCTIONS

1. Section I will be initiated by the Contractor in the required number of copies.

2. Each transmittal shall be numbered consecutively in the space provided for "Transmittal No.". This number, in addition to the contract number, will form a serial number for identifying each submittal. For new submittals or resubmittals mark the appropriate box; on resubmittals, insert transmittal number of last submission as well as the new submittal number.

3. The "Item No." will be the same "Item No." as indicated on ENG FORM 4288-R for each entry on this form.

4. Submittals requiring expeditious handling will be submitted on a separate form.

5. Separate transmittal form will be used for submittals under separate sections of the specifications.

6. A check shall be placed in the "Variation" column when a submittal is not in accordance with the plans and specifications--also, a written statement to that effect shall be included in the space provided for "Remarks".

7. Form is self-transmittal, letter of transmittal is not required.

8. When a sample of material or Manufacturer's Certificate of Compliance is transmitted, indicate "Sample" or "Certificate" in column c, Section I.

9. U.S. Army Corps of Engineers approving authority will assign action codes as indicated below in space provided in Section I, column i to each item submitted. In addition they will ensure enclosures are indicated and attached to the form prior to return to the contractor. The Contractor will assign action codes as indicated below in Section I, column g, to each item submitted.

THE FOLLOWING ACTION CODES ARE GIVEN TO ITEMS SUBMITTED

A -- Approved as submitted.

B -- Approved, except as noted on drawings.

C -- Approved, except as noted on drawings. Refer to attached sheet resubmission required.

D -- Will be returned by separate correspondence.

E -- Disapproved (See attached).

F -- Receipt acknowledged.

FX -- Receipt acknowledged, does not comply as noted with contract requirements.

G -- Other *(Specify)*

10. Approval of items does not relieve the contractor from complying with all the requirements of the contract plans and specifications.

(Reverse of ENG Form 4025-R)

SECTION TABLE OF CONTENTS

DIVISION 01 - GENERAL REQUIREMENTS

SECTION 01355

ENVIRONMENTAL PROTECTION

PART 1 GENERAL

1.1 REFERENCES
1.2 DEFINITIONS
1.2.1 Environmental Pollution and Damage
1.2.2 Environmental Protection
1.2.3 Contractor Generated Hazardous Waste
1.2.4 Land Application for Discharge Water
1.2.5 Surface Discharge
1.2.6 Waters of the United States
1.2.7 Wetlands
1.3 GENERAL REQUIREMENTS
1.4 SUBCONTRACTORS
1.5 PAYMENT
1.6 SUBMITTALS
1.7 Environmental Protection Plan
1.7.1 Compliance
1.7.2 Contents
1.7.3 Appendix
1.8 PROTECTION FEATURES
1.9 SPECIAL ENVIRONMENTAL REQUIREMENTS
1.10 ENVIRONMENTAL ASSESSMENT OF CONTRACT DEVIATIONS
1.11 NOTIFICATION

PART 2 PRODUCTS (NOT USED)

PART 3 EXECUTION

3.1 ENVIRONMENTAL PERMITS AND COMMITMENTS
3.2 LAND RESOURCES
3.2.1 Work Area Limits
3.2.2 Landscape
3.2.3 Erosion and Sediment Controls
3.2.4 Unprotected Erodible Soils
3.2.5 Disturbed Areas
3.2.6 Contractor Facilities and Work Areas
3.3 WATER RESOURCES
3.4 AIR RESOURCES
3.4.1 Particulates
3.4.2 Odors
3.4.3 Sound Intrusions
3.4.4 Burning

3.5 CHEMICAL MATERIALS MANAGEMENT AND WASTE DISPOSAL
3.5.1 Solid Wastes
3.5.2 Chemicals and Chemical Wastes
3.5.3 Contractor Generated Hazardous Wastes/Excess Hazardous Materials
3.5.4 Fuel and Lubricants
3.5.5 Waste Water
3.6 HISTORICAL, ARCHAEOLOGICAL, AND CULTURAL RESOURCES
3.7 BIOLOGICAL RESOURCES
3.7.1 Threatened and Endangered Species Protection
3.7.2 Protection of Biological Resources
3.8 PREVIOUSLY USED EQUIPMENT
3.9 MAINTENANCE OF POLLUTION FACILITIES
3.10 TRAINING OF CONTRACTOR PERSONNEL
3.11 POST CONSTRUCTION CLEANUP

-- End of Section Table of Contents --

SECTION 01355

ENVIRONMENTAL PROTECTION

PART 1 GENERAL

1.1 REFERENCES

The publications listed below form a part of this specification to the extent referenced. The publications are referred to in the text by basic designation only.

CODE OF FEDERAL REGULATIONS (CFR)

33 CFR 328	Definitions
40 CFR 68	Chemical Accident Prevention Provisions
40 CFR 261	Identification and Listing of Hazardous Waste
40 CFR 279	Standards for the Management of Used Oil
40 CFR 302	Designation, Reportable Quantities, and Notification
40 CFR 355	Emergency Planning and Notification
49 CFR 171 - 178	Hazardous Materials Regulations

U.S. ARMY CORPS OF ENGINEERS (USACE)

COE EM 385-1-1	(1996) Safety and Health Requirements Manual

US ARMY CORPS OF ENGINEERS TECHNICAL REPORT

WETLAND MANUAL	Corps of Engineers Wetlands Delineation Manual Technical Report Y-87-1

1.2 DEFINITIONS

1.2.1 Environmental Pollution and Damage

Environmental pollution and damage is the presence of chemical, physical, or biological elements or agents which adversely affect human health or welfare; unfavorably alter ecological balances of importance to human life; affect other species of importance to humankind; or degrade the environment aesthetically, culturally and/or historically.

1.2.2 Environmental Protection

Environmental protection is the prevention/control of pollution and habitat disruption that may occur to the environment during construction. The control of environmental pollution and damage requires consideration of land, water, and air; biological and cultural resources; and includes management of visual aesthetics; noise; solid, chemical, gaseous, and liquid waste; radiant energy and radioactive material as well as other pollutants.

1.2.3 Contractor Generated Hazardous Waste

Contractor generated hazardous waste means materials that, if abandoned or disposed of, may meet the definition of a hazardous waste. These waste streams would typically consist of material brought on site by the Contractor to execute work, but are not fully consumed during the course of construction. Examples include, but are not limited to, excess paint thinners (i.e. methyl ethyl ketone, toluene etc.), waste thinners,excess paints, excess solvents, waste solvents, and excess pesticides, and contaminated pesticide equipment rinse water.

1.2.4 Land Application for Discharge Water

The term "Land Application" for discharge water implies that the Contractor shall discharge water at a rate which allows the water to percolate into the soil. No sheeting action, soil erosion, discharge into storm sewers, discharge into defined drainage areas, or discharge into the "waters of the United States" shall occur. Land Application shall be in compliance with all applicable Federal, State, and local laws and regulations.

1.2.5 Surface Discharge

The term "Surface Discharge" implies that the water is discharged with possible sheeting action and subsequent soil erosion may occur. Waters that are surface discharged may terminate in drainage ditches, storm sewers,creeks, and/or "waters of the United States" and would require a permit to discharge water from the governing agency.

1.2.6 Waters of the United States

All waters which are under the jurisdiction of the Clean Water Act, as defined in 33 CFR 328.

1.2.7 Wetlands

Wetlands means those areas that are inundated or saturated by surface or ground water at a frequency and duration sufficient to support, and that under normal circumstances do support, a prevalence of vegetation typically adapted for life in saturated soil conditions. Wetlands generally include swamps, marshes, and bogs. Official determination of whether or not an area is classified as a wetland must be done in accordance with WETLAND MANUAL.

1.3 GENERAL REQUIREMENTS

The Contractor shall minimize environmental pollution and damage that may occur as the result of construction operations. The environmental resources within the project boundaries and those affected outside the limits of permanent work shall be protected during the entire duration of this contract. The Contractor shall comply with all applicable environmental Federal, State, and local laws and regulations. The Contractor shall be responsible for any delays resulting from failure to comply with environmental laws and regulations.

1.4 SUBCONTRACTORS

The Contractor shall ensure compliance with this section by subcontractors.

1.5 PAYMENT

No separate payment will be made for work covered under this section. The Contractor shall be responsible for payment of fees associated with environmental permits, application, and/or notices obtained by the Contractor. All costs associated with this section shall be included in the contract price. The Contractor shall be responsible for payment of all fines/fees for violation or non-compliance with Federal, State, Regional and local laws and regulations.

1.6 SUBMITTALS

Government approval is required for submittals with a "G" designation; submittals not having a "G" designation are for information only. When used, a designation following the "G" designation identifies the office that will review the submittal for the Government. The "RE" designates that the Resident Office will review the submittal for the Government. Submit the following in accordance with Section 01330, SUBMITTAL PROCEDURES:

SD-01 Preconstruction Submittals

Environmental Protection Plan; G, RE.

1.7 Environmental Protection Plan

Prior to commencing construction activities or delivery of materials to the site, the Contractor shall submit an Environmental Protection Plan for review and approval by the Contracting Officer. The purpose of the Environmental Protection Plan is to present a comprehensive overview of known or potential environmental issues which the Contractor must address during construction. Issues of concern shall be defined within the Environmental Protection Plan as outlined in this section. The Contractor shall address each topic at a level of detail commensurate with the environmental issue and required construction task(s). Topics or issues which are not identified in this section, but which the Contractor considers necessary, shall be identified and discussed after those items formally identified in this section. Prior to submittal of the Environmental Protection Plan, the Contractor shall meet with the Contracting Officer for the purpose of discussing the implementation of the initial Environmental Protection Plan; possible subsequent additions and revisions to the plan including any reporting requirements; and methods for

administration of the Contractor's Environmental Plans. The Environmental Protection Plan shall be current and maintained onsite by the Contractor.

1.7.1 Compliance

No requirement in this Section shall be construed as relieving the Contractor of any applicable Federal, State, and local environmental protection laws and regulations. During Construction, the Contractor shall be responsible for identifying, implementing, and submitting for approval any additional requirements to be included in the Environmental Protection Plan.

1.7.2 Contents

The environmental protection plan shall include, but shall not be limited to, the following:

a. Name(s) of person(s) within the Contractor's organization who is(are) responsible for ensuring adherence to the Environmental Protection Plan.

b. Name(s) and qualifications of person(s) responsible for manifesting hazardous waste to be removed from the site, if applicable.

c. Name(s) and qualifications of person(s) responsible for training the Contractor's environmental protection personnel.

d. Description of the Contractor's environmental protection personnel training program.

e. An erosion and sediment control plan which identifies the type and location of the erosion and sediment controls to be provided. The plan shall include monitoring and reporting requirements to assure that the control measures are in compliance with the erosion and sediment control plan, Federal, State, and local laws and regulations. A Storm Water Pollution Prevention Plan (SWPPP) may be substituted for this plan.

f. Drawings showing locations of proposed temporary excavations or embankments for haul roads, stream crossings, material storage areas, structures, sanitary facilities, and stockpiles of excess or spoil materials including methods to control runoff and to contain materials on the site.

g. Traffic control plans including measures to reduce erosion of temporary roadbeds by construction traffic, especially during wet weather. Plan shall include measures to minimize the amount of mud transported onto paved public roads by vehicles or runoff.

h. Work area plan showing the proposed activity in each portion of the area and identifying the areas of limited use or nonuse. Plan should include measures for marking the limits of use areas including methods for protection of features to be preserved

within authorized work areas.

i. Drawing showing the location of borrow areas.

j. The Spill Control plan shall include the procedures, instructions, and reports to be used in the event of an unforeseen spill of a substance regulated by 40 CFR 68, 40 CFR 302, 40 CFR 355, and/or regulated under State or Local laws and regulations. The Spill Control Plan supplements the requirements of COE EM 385-1-1. This plan shall include as a minimum:

1. The name of the individual who will report any spills or hazardous substance releases and who will follow up with complete documentation. This individual shall immediately notify the Contracting Officer and the local Fire Department in addition to the legally required Federal, State, and local reporting channels (including the National Response Center 1-800-424-8802) if a reportable quantity is released to the environment. The plan shall contain a list of the required reporting channels and telephone numbers.

2. The name and qualifications of the individual who will be responsible for implementing and supervising the containment and cleanup.

3. Training requirements for Contractor's personnel and methods of accomplishing the training.

4. A list of materials and equipment to be immediately available at the job site, tailored to cleanup work of the potential hazard(s) identified.

5. The names and locations of suppliers of containment materials and locations of additional fuel oil recovery, cleanup, restoration, and material-placement equipment available in case of an unforeseen spill emergency.

6. The methods and procedures to be used for expeditious contaminant cleanup.

k. A non-hazardous solid waste disposal plan identifying methods and locations for solid waste disposal including clearing debris. The plan shall include schedules for disposal. The Contractor shall identify any subcontractors responsible for the transportation and disposal of solid waste. Licenses or permits shall be submitted for solid waste disposal sites that are not a commercial operating facility. Evidence of the disposal facility's acceptance of the solid waste shall be attached to this plan during the construction. The Contractor shall attach a copy of each of the Non-hazardous Solid Waste Diversion Reports to the disposal plan. The report shall be submitted on the first working day after the first quarter that non-hazardous solid waste has been disposed and/or diverted and shall be for the previous quarter (e.g. the first working day of January, April, July, and October). The

report shall indicate the total amount of waste generated and total amount of waste diverted in cubic meters or tons along with the percent that was diverted.

l. A recycling and solid waste minimization plan with a list of measures to reduce consumption of energy and natural resources. The plan shall detail the Contractor's actions to comply with and to participate in Federal, State, Regional, and local government sponsored recycling programs to reduce the volume of solid waste at the source.

m. An air pollution control plan detailing provisions to assure that dust, debris, materials, trash, etc., do not become air borne and travel off the project site.

n. A contaminant prevention plan that: identifies potentially hazardous substances to be used on the job site; identifies the intended actions to prevent introduction of such materials into the air, water, or ground; and details provisions for compliance with Federal, State, and local laws and regulations for storage and handling of these materials. In accordance with COE EM 385-1-1, a copy of the Material Safety Data Sheets (MSDS) and the maximum quantity of each hazardous material to be on site at any given time shall be included in the contaminant prevention plan. As new hazardous materials are brought on site or removed from the site, the plan shall be updated.

o. A waste water management plan that identifies the methods and procedures for management and/or discharge of waste waters which are directly derived from construction activities, such as concrete curing water, clean-up water, dewatering of ground water, disinfection water, hydrostatic test water, and water used in flushing of lines. If a settling/retention pond is required, the plan shall include the design of the pond including drawings, removal plan, and testing requirements for possible pollutants. If land application will be the method of disposal for the waste water, the plan shall include a sketch showing the location for land application along with a description of the pretreatment methods to be implemented. If surface discharge will be the method of disposal, a copy of the permit and associated documents shall be included as an attachment prior to discharging the waste water. If disposal is to a sanitary sewer, the plan shall include documentation that the Waste Water Treatment Plant Operator has approved the flow rate, volume, and type of discharge.

p. A historical, archaeological, cultural resources biological resources and wetlands plan that defines procedures for identifying and protecting historical, archaeological, cultural resources, biological resources and wetlands known to be on the project site: and/or identifies procedures to be followed if historical archaeological, cultural resources, biological resources and wetlands not previously known to be onsite or in the area are discovered during construction. The plan shall include methods to assure the protection of known or discovered resources

and shall identify lines of communication between Contractor personnel and the Contracting Officer.

1.7.3 Appendix

Copies of all environmental permits, permit application packages, approvals to construct, notifications, certifications, reports, and termination documents shall be attached,as an appendix, to the Environmental Protection Plan.

1.8 PROTECTION FEATURES

Prior to starting any onsite construction activities, the Contractor and the Contracting Officer shall make a joint survey after which the Contractor shall prepare a brief report indicating on a layout plan the areas where native plants will be salvaged. All plant materials to be salvaged shall be identified and clearly marked. Vegetation outside of the project area shall be identified for protection.

1.9 SPECIAL ENVIRONMENTAL REQUIREMENTS

The Contractor shall comply with the stipulation of the BLM right-of-way grant and the special environmental requirements included at the end of this section.

1.10 ENVIRONMENTAL ASSESSMENT OF CONTRACT DEVIATIONS

Any deviations, requested by the Contractor, from the drawings,plans and specifications which may have an environmental impact will be subject to approval by the Contracting Officer and may require an extended review, processing, and approval time. The Contracting Officer reserves the right to disapprove alternate methods, even if they are more cost effective, if the Contracting Officer determines that the proposed alternate method will have an adverse environmental impact.

1.11 NOTIFICATION

The Contracting Officer will notify the Contractor in writing of any observed noncompliance with Federal, State or local environmental laws or regulations, permits, and other elements of the Contractor's Environmental Protection plan. The Contractor shall, after receipt of such notice, inform the Contracting Officer of the proposed corrective action and take such action when approved by the Contracting Officer. The Contracting Officer may issue an order stopping all or part of the work until satisfactory corrective action has been taken. No time extensions shall be granted or equitable adjustments allowed to the Contractor for any such suspensions. This is in addition to any other actions the Contracting Officer may take under the contract, or in accordance with the Federal Acquisition Regulation or Federal Law.

PART 2 PRODUCTS (NOT USED)

PART 3 EXECUTION

3.1 ENVIRONMENTAL PERMITS AND COMMITMENTS

This paragraph supplements the Contractor's responsibility under the contract clause "PERMITS AND RESPONSIBILITIES" to the extent that the Government has obtained environmental permits. The Contractor shall comply with the terms and conditions of the attached list of environmental commitments at the end of this section.

The Contractor shall be responsible for obtaining and complying with all environmental permits and commitments required by Federal, State, Regional, and local environmental laws and regulations.

3.2 LAND RESOURCES

The Contractor shall confine all activities to areas defined by the drawings and specifications. Prior to the beginning of any construction, the Contractor shall identify any land resources to be preserved within the work area. Except in areas indicated on the drawings or specified to be cleared, the Contractor shall not remove, cut, deface, injure, or destroy land resources including trees, shrubs, vines, grasses, topsoil, and land forms without approval. No ropes, cables, or guys shall be fastened to or attached to any trees for anchorage unless specifically authorized. The Contractor shall provide effective protection for land and vegetation resources at all times as defined in the following subparagraphs. Stone, soil, or other materials displaced into uncleared areas shall be removed by the Contractor.

3.2.1 Work Area Limits

Prior to commencing construction activities, the Contractor shall mark the areas that need not be disturbed under this contract. Cactus Yucca, shrubs, grasses, land forms and other landscape features outside the construction area shall be preserved. Isolated areas within the general work area which are not to be disturbed shall be marked or fenced. Monuments and markers shall be protected before construction operations commence. Where construction operations are to be conducted during darkness, any markers shall be visible in the dark. The Contractor's personnel shall be knowledgeable of the purpose for marking and/or protecting particular objects.

3.2.2 Landscape

Trees, shrubs, vines, grasses, land forms and other landscape features indicated and defined on the drawings to be preserved shall be clearly identified by marking, fencing, or wrapping with boards, or any other approved techniques. The Contractor shall restore landscape features damaged or destroyed during construction operations outside the limits of the approved work area.

3.2.3 Erosion and Sediment Controls

The Contractor shall be responsible for providing erosion and sediment control measures in accordance with Federal, State, and local laws and regulations. The erosion and sediment controls selected and maintained by

the Contractor shall be such that water quality standards are not violated as a result of the Contractor's construction activities. The area of bare soil exposed at any one time by construction operations should be kept to a minimum. The Contractor shall construct or install temporary and permanent erosion and sediment control best management practices (BMPs) as specified in Section 01356 STORM WATER POLLUTION PREVENTION MEASURES. BMPs may include, but not be limited to, vegetation cover, stream bank stabilization, slope stabilization, silt fences, construction of terraces, interceptor channels, sediment traps, inlet and outfall protection, diversion channels, and sedimentation basins. The Contractor's best management practices shall also be in accordance with the National Pollutant Discharge Elimination System (NPDES) Storm Water Pollution Prevention Plan (SWPPP) which may be reviewed at the Environmental Office. Any temporary measures shall be removed after the area has been stabilized.

3.2.4 Unprotected Erodible Soils

Earthwork brought to final grade shall be finished as indicated. Side slopes and back slopes shall be protected as soon as practicable upon completion of rough grading. All earthwork shall be planned and conducted to minimize the duration of exposure of unprotected soils. Except in cases where the constructed feature obscures borrow areas, quarries, and waste material areas, these areas shall not initially be totally cleared. Clearing of such areas shall progress in reasonably sized increments as needed to use the developed areas as approved by the Contracting Officer.

3.2.5 Disturbed Areas

The Contractor shall effectively prevent erosion and control sedimentation through approved methods including, but not limited to, the following:

a. Retardation and control of runoff. Runoff from the construction site or from storms shall be controlled, retarded, and diverted to protected drainage courses by means of diversion ditches, benches, berms, and by any measures required by area wide plans under the Clean Water Act.

3.2.6 Contractor Facilities and Work Areas

The Contractor's field offices, staging areas, stockpile storage, and temporary buildings shall be placed in areas designated on the drawings or as directed by the Contracting Officer. Temporary movement or relocation of Contractor facilities shall be made only when approved. Erosion and sediment controls shall be provided for on-site borrow and spoil areas to prevent sediment from entering nearby waters. Temporary excavation and embankments for plant and/or work areas shall be controlled to protect adjacent areas.

3.3 WATER RESOURCES

The Contractor shall monitor construction activities to prevent pollution of surface and ground waters. Toxic or hazardous chemicals shall not be applied to soil or vegetation unless otherwise indicated. All water areas affected by construction activities shall be monitored by the Contractor.

For construction activities immediately adjacent to impaired surface waters, the Contractor shall be capable of quantifying sediment or pollutant loading to that surface water when required by State or Federally issued Clean Water Act permits.

3.4 AIR RESOURCES

Equipment operation and activities or processes performed by the Contractor in accomplishing the specified construction shall be in accordance with the State's rules and all Federal emission and performance laws and standards. The Contractor shall obtain and comply with Air Quality Permits. Ambient Air Quality Standards set by the Environmental Protection Agency shall be maintained. Monitoring of air quality shall be the Contractor's responsibility. All air areas affected by the construction activities shall be monitored by the Contractor. Monitoring results will be periodically reviewed by the Government to ensure compliance.

Special management techniques as set out below shall be implemented to control air pollution by the construction activities. These techniques supplement the requirements of Federal, State, and local laws and regulations; and the safety requirements under this Contract. If any of the following techniques conflict with the requirements of Federal, State, or local laws or regulations, or safety requirements under this contract, then those requirements shall be followed in lieu of the following.

3.4.1 Particulates

Dust particles; aerosols and gaseous by-products from construction activities; and processing and preparation of materials, such as from asphaltic batch plants; shall be controlled at all times, including weekends, holidays and hours when work is not in progress. The Contractor shall maintain excavations, stockpiles, haul roads, permanent and temporary access roads, plant sites, spoil areas, borrow areas, and other work areas within or outside the project boundaries free from particulates which would cause the Federal, State, and local air pollution standards to be exceeded or which would cause a hazard or a nuisance. Sprinkling, chemical treatment of an approved type, baghouse, scrubbers, electrostatic precipitators or other methods will be permitted to control particulates in the work area. Sprinkling, to be efficient, must be repeated to keep the disturbed area damp at all times. The Contractor must have sufficient, competent equipment available to accomplish these tasks. Particulate control shall be performed as the work proceeds and whenever a particulate nuisance or hazard occurs. The Contractor shall comply with all State and local visibility regulations.

3.4.2 Odors

Odors from construction activities shall be controlled at all times. The odors shall not cause a health hazard and shall be in compliance with State regulations and/or local ordinances.

3.4.3 Sound Intrusions

The Contractor shall keep construction activities under surveillance and

control to minimize environment damage by noise.

3.4.4 Burning

Burning shall be prohibited on the Government premises.

3.5 CHEMICAL MATERIALS MANAGEMENT AND WASTE DISPOSAL

Disposal of wastes shall be as directed below, unless otherwise specified in other sections and/or shown on the drawings.

3.5.1 Solid Wastes

Solid wastes (excluding clearing debris) shall be placed in containers which are emptied on a regular schedule. Handling, storage, and disposal shall be conducted to prevent contamination. Segregation measures shall be employed so that no hazardous or toxic waste will become co-mingled with solid waste. The Contractor shall transport solid waste off site and dispose of it in compliance with Federal, State, and local requirements for solid waste disposal.

3.5.2 Chemicals and Chemical Wastes

Chemicals shall be dispensed ensuring no spillage to the ground or water. Periodic inspections of dispensing areas to identify leakage and initiate corrective action shall be performed and documented. This documentation will be periodically reviewed by the Government. Chemical waste shall be collected in corrosion resistant, compatible containers. Collection drums shall be monitored and removed to a staging or storage area when contents are within 150 mm of the top. Wastes shall be classified, managed, stored, and disposed of in accordance with Federal, State, and local laws and regulations.

3.5.3 Contractor Generated Hazardous Wastes/Excess Hazardous Materials

Hazardous wastes are defined in 40 CFR 261, or are as defined by applicable State and local regulations. The Contractor shall take sufficient measures to prevent spillage of hazardous and toxic materials during dispensing. The Contractor shall segregate hazardous waste from other materials and wastes, shall protect it from the weather by placing it in a safe covered location, and shall take precautionary measures such as berming or other appropriate measures against accidental spillage. The Contractor shall be responsible for storage, describing, packaging, labeling, marking, and placarding of hazardous waste and hazardous material in accordance with 49 CFR 171 - 178, State, and local laws and regulations. The Contractor shall transport Contractor generated hazardous waste off Government property within 60 days in accordance with the Environmental Protection Agency and the Department of Transportation laws and regulations. The Contractor shall dispose of hazardous waste in compliance with Federal, State and local laws and regulations. Spills of hazardous or toxic materials shall be immediately reported to the Contracting Officer. Cleanup and cleanup costs due to spills shall be the Contractor's responsibility.

3.5.4 Fuel and Lubricants

Storage, fueling and lubrication of equipment and motor vehicles shall be conducted in a manner that affords the maximum protection against spill and evaporation. Fuel, lubricants and oil shall be managed and stored in accordance with all Federal, State, Regional, and local laws and regulations. Used lubricants and used oil to be discarded shall be stored in marked corrosion-resistant containers and recycled or disposed in accordance with 40 CFR 279, State, and local laws and regulations. [There shall be no storage of fuel on the project site. Fuel must be brought to the project site each day that work is performed.] [Storage of fuel on the project site shall be accordance with all Federal, State, and local laws and regulations.]

3.5.5 Waste Water

Disposal of waste water shall be as specified below.

a. Waste water from construction activities, such as onsite material processing, concrete curing, foundation and concrete clean-up, water used in concrete trucks, forms, etc. shall not be allowed to enter water ways or to be discharged prior to being treated to remove pollutants. The Contractor shall dispose of the construction related waste water in accordance with all Federal, State, Regional and Local laws and regulations.

3.6 HISTORICAL, ARCHAEOLOGICAL, AND CULTURAL RESOURCES

If during excavation or other construction activities any previously unidentified or unanticipated historical, archaeological, and cultural resources are discovered or found, all activities that may damage or alter such resources shall be temporarily suspended. Resources covered by this paragraph include but are not limited to: any human skeletal remains or burials; artifacts; shell, midden, bone, charcoal, or other deposits; rock or coral alignments, pavings, wall, or other constructed features; and any indication of agricultural or other human activities. Upon such discovery or find, the Contractor shall immediately notify the Contracting Officer so that the appropriate authorities may be notified and a determination made as to their significance and what, if any, special disposition of the finds should be made. The Contractor shall cease all activities that may result in impact to or the destruction of these resources. The Contractor shall secure the area and prevent employees or other persons from trespassing on, removing, or otherwise disturbing such resources.

3.7 BIOLOGICAL RESOURCES

3.7.1 Threatened and Endangered Species Protection

If during construction activities any threatened or endangered species (particularly the Desert Tortoise) are observed in or near the construction area, such observations shall be reported immediately to the Contracting Officer so that the appropriate authorities may be notified and a determination made as to what special disposition should be made. The Contractor shall strictly adhere to the relevant articles of the following

Table 01355-1 found at the end of this section. In no circumstances shall any employee directly handle any tortoise unless it is in imminent danger. The Contractor shall cease all activities that may result in an impact to or the destruction of these resources. The Contractor shall prevent his employees from trespassing on private property, removing, or otherwise disturbing any threatened or endangered species.

Based on the Nevada Division of Wildlife's (NDOW) February 23, 2001 comments on the January 2001 DSEA for the R-4 Detention Basin and Haul Road Alignment, the Corps has agreed to incorporate protocols to protect the Gila monster into its program to protect the desert tortoise. Separate surveys for the Gila monster are not required. The biological monitor (for the desert tortoise) shall also be trained to recognize the Gila monster and to handle this species according to NDOW protocol. The Gila monster is not federally listed as Threatened or Endangered, but it is classified as a State of Nevada Protected Reptile and a BLM Sensitive Species. If during the preconstruction biological surveys or construction monitoring (for desert tortoise), a Gila monster is discovered, the NDOW will be notified. If the NDOW is not available, the biologist shall photograph the Gila monster, document its location, capture, and release the Gila monster out of harm's way, using precautions to avoid being bitten.

3.7.2 Protection of Biological Resources

The Contractor shall keep construction activities under surveillance, management, and control to minimize interference with, disturbance to, and damage of, native vegetation, fish, and wildlife. The Contractor shall minimize interference with, disturbance to, and damage of wildlife. Species that require specific attention along with measures for their protection shall be listed by the Contractor prior to beginning of construction operations.

3.8 PREVIOUSLY USED EQUIPMENT

The Contractor shall clean all previously used construction equipment prior to bringing it onto the project site. The Contractor shall ensure that the equipment is free from soil residuals, egg deposits from plant pests, noxious weeds, and plant seeds. The Contractor shall consult with the USDA jurisdictional office for additional cleaning requirements.

3.9 MAINTENANCE OF POLLUTION FACILITIES

The Contractor shall maintain permanent and temporary pollution control facilities and devices for the duration of the contract or for that length of time construction activities create the particular pollutant.

3.10 TRAINING OF CONTRACTOR PERSONNEL

The Contractor's personnel shall be trained in all phases of environmental protection and pollution control. The Contractor shall conduct environmental protection/pollution control meetings for all Contractor personnel prior to commencing construction activities. Additional meetings shall be conducted for new personnel and when site conditions change. The training and meeting agenda shall include: methods of detecting and

avoiding pollution; familiarization with statutory and contractual pollution standards; installation and care of devices, vegetative covers, and instruments required for monitoring purposes to ensure adequate and continuous environmental protection/pollution control; anticipated hazardous or toxic chemicals or wastes, and other regulated contaminants; recognition and protection of archaeological sites, artifacts, wetlands, and endangered species and their habitat that are known to be in the area.

3.11 POST CONSTRUCTION CLEANUP

The Contractor shall clean up all areas used for construction in accordance with Contract Clause: "Cleaning Up". The Contractor shall, unless otherwise instructed in writing by the Contracting Officer, obliterate all signs of temporary construction facilities such as haul roads, work area, structures, foundations of temporary structures, stockpiles of excess or waste materials, and other vestiges of construction prior to final acceptance of the work. The disturbed area shall be graded, filled and the entire area seeded unless otherwise indicated.

-- End of Section --

Table 01355-1

ENVIRONMENTAL COMMITMENTS

Significant Impact	EIS Ref.	Federal Enviro nmental	Mitigation Commitment	Implementa tion
Impacts to desert tortoise	Para 2.03	NEPA, Endan-gered Species Act	Payment of a Compensation Fee of $550 per acre of permanent disturbance and $220 per acre of tempo-rary disturbance (40 percent of the assessment for permanent disturbance). This assessment would re-sult in a compensation of $401,340 for permanent disturbance and $47,214 for temporary disturbance for a total of $448,554.	Prior to the initi-ation of construc-tion. Paid by Corps of Engineers.
Impacts to desert tortoise during pre construction and construc-tion	Para 2.03	NEPA, Endan-gered Species Act	The Corps will designate an individual as a contact representative who will be responsible for overseeing compliance with protective stipulations for the desert tortoise and coordination with the FWS.	Concurrent with pre con-struction and con-struction activities causing
			Any biologist supervising pre-construction and construction activity and/or moving tortoises or their eggs shall be a qualified tortoise biologist trained in the handling procedures specified in the Appendix A to the Biological Opinion (BO) issued by the FWS (Appendix D).	Concurrent with pre con-struction and con-struction activities

			Prior to start of pre-construction and construction activities in any areas occupied by the desert tortoise, or in which tortoise habitat is found, all employees who will work in such areas will be informed, through an education program, developed by the Corps, of the occurrence of the desert tortoise in the project area, and of the Threatened status of the species. They will be advised of the definition of "take", of the potential for impacts to the tortoise, and of the potential penalties (up to $25,000 in fines and 6 months in prison) for taking a threatened species. They will also be informed of the mitigation measures to which the Corps has committed and the terms and conditions included in the Biological Opinion.	Concurrent with pre construction and construction activities causing impacts.
			The contents of the education program would be coordinated with the FWS prior to its implementation. The program will also be presented to all supervisory and maintenance personnel associated with activities in tortoise habitat, and private landowners, if any, who will be responsible for maintenance of facilities on their properties. All such persons will sign a statement indicating that they have completed the education program and understand fully its provisions and the specific measures, terms, and conditions included in the EIS and Biological Opinion.	Concurrent with pre construction and construction activities causing impacts.

			Within 60 days prior to initial brushing, grubbing, grading, or other construction activity, a thorough survey of the construction site, including areas outside the facility boundaries likely to be disturbed by construction activities, will be conducted by the qualified Biologist. All tortoises, including any eggs found, will be removed form the site no more than 60 days prior to the onset of construction. Alternatively, removal efforts may occur in concert with surveys of project areas if performed no more than 60 days prior to the onset of construction.	Concurrent with pre construction and construction activities causing impacts.
			Each burrow, whether showing evidence of activity of not, will be 1) either examined using a fiberoptiscope and, if a tortoise is present, excavated by hand to remove the tortoise, or (2 excavated by hand to remove any tortoise or eggs that may be present. Burrows or dens of other species that could be used by tortoises also will be treated in the same manner. Tortoises found in these areas shall be handled and moved out of the construction zone according to the protocol provided in Appendix A to the Biological Opinion. All burrows will be excavated under the supervision of the Biologist. Only the Biologist shall handle tortoises or tortoise eggs.	Concurrent with pre construction and construction activities causing impacts.
			Tortoises removed from the wild will be relocated as specified under the section on measures to minimize mortality of desert tortoises during transportation, handling, and care following removal from project sites, below.	Concurrent with construction activities causing impacts.

			The Construction right-of-way for all primary channels and the lateral collector channel system will be inspected for tortoises and their burrows not more than one working day prior to any surface disturbing activities. The inspection will be conducted by a qualified tortoise biologist and will provide 100 percent coverage of the right-of-way. The area will be surveyed three times unless no tortoises are found on the second pass.	Concurrent with construction activities causing impacts.
			Tortoises found on all channel and lateral collector sites will be moved off the construction site for a distance of 300 to 1,000 feet and placed in the shade of a shrub, in a natural unoccupied burrow similar to the hibernaculum in which it was found, or in an artificially constructed burrow following the protocol provided in Appendix A to the Biological Assessment. Tortoises will not be placed on land not under the ownership of the Bureau of Land Management or the Flood Control District without the written permission of the landowner. If such permission is not obtained, the tortoise would be handled under the procedures outlined above.	Concurrent with construction activities causing impacts.

			Tortoises showing symptoms of Upper Respiratory Tract Disease will be left in the wild. To minimize the risk of spreading the Upper Respiratory Tract Disease, each tortoise will be handled with a separate pair of disposable gloves. All materials used to handle or contain tortoises will be used once and then discarded or sterilized. Cardboard boxes used to hold tortoises will be purchased new, used once, and then discarded. Tortoises will be purposefully moved only by qualified tortoise biologists, solely for the purpose of moving them out of harm's way. If a suitable location is not found, tortoises will be disposed of as specified under the subparagraph on measures to minimize mortality of desert tortoises during transportation, handling, and care following removal from project sites, below.	Concurrent with con-struction activities causing impacts.
			All vehicle traffic during construction will be restricted to existing roadways and to areas that have been cleared of tortoises. Speed limits in undeveloped areas containing tortoise habitat will not exceed 10 miles per hour from March 1 to November 15 of any year, except in emergency situations involving human health and safety. Information will be provided to construction crews and other workers regarding areas where vehicular traffic is not allowed. The ground beneath any vehicle parked in areas occupied by the desert tortoise will be carefully searched for tortoises before the vehicle is moved. If a tortoise is found beneath a vehicle, then the Biologist will move it according to the protocol specified in Appendix A to the Biological Opinion.	Concurrent with con-struction activities causing impacts.

			The Corps or the local sponsor, as appropriate, will deliver all tortoises that are to be removed permanently from the wild to Dewey Animal Care, Inc., in Las Vegas, Nevada. The Corps or the local sponsor will bear the cost incurred by Dewey Animal Care, Inc., of caring for and marking the tortoises. The time and date of collection, Biological Opinion number, and collector's name will be marked by the Corps or the local sponsor on each individual box containing a desert tortoise. The Corps or local sponsor will contact the tortoise transfer facility in writing at least 10 days in advance that tortoises are to be collected and delivered to the facility. The Corps will notify the local sponsor of this requirement.	Concurrent with construction activities causing impacts.
			The Corps is responsible for ensuring that the following provisions are implemented: 1) All tortoises delivered from the transfer facility will be permaneltly and humanely marked as provided under the Short-term Habitat Conservaton Plan for the Desert Tortoise. 2) Handling of tortoises by Dewey Animal Care, Inc., will be consistent with conditions authorized under Fish and Wildlife 10(a)(1)(B) Permit #756260.	Concurrent with construction activities causing impacts.
			The Corps and/or its designee will implement a litter control program during construction that will include the use of covered, raven-proof trash receptacles, removal of trash from the construction site to the trash receptacles following the close of each work day, and proper disposal of trash in a designated solid waste disposal facility at the end of each work week.	Concurrent with construction activities causing impacts.

Impacts to desert tortoise during operation and mainatenance	Para 2.03	NEPA, Endan-gered Species Act	Prior to maintenance activities at any facility in tortoise habitat, a qualified Biologist will conduct a thorough survey of the facility not more than 1 day prior to initiation of the work and flag all tortoise burrows found within the area in which maintenance activities will take place. If the maintenance is to occur between November 1 and March 15, burrows shall either be completely avoided, or the burrows dug out and hibernating tortoises moved as specified in Appendix A of the Biological Opinion. If the maintenance is to occur between March 15 and November 1, a Biologist shall accompany the maintenance crew and move all tortoises to safety that would be affected by the activity as specified in Appendix A of the Biological Opinion.	Subsequent to project completion (operation and main-tenance).
			Herbicides shall not be used in or adjacent to any facilities located in areas occupied by the desert tortoise unless approved in writing by the FWS.	Subsequent to project completion (operation and main-tenance).
			Maintenance crews that locate a tortoise that is trapped in any flood control facility will im-mediately notify a person designated by the local sponsor to handle such situations. The tortoise will be moved by a person trained in tortoise handling procedures. If a live tortoise is in imminent danger of harm within a facility, a maintenance crew member may move the tortoise out of harms way using methods provided in the training program.	Subsequent to project completion (operation and main-tenance).

Temporary impacts to the desert tortoise and other vegetation and wildlife	Para 2.03	NEPA, Endangered Species Act	The Corps will develop and implement a revegetation program for temporarily disturbed sites west of Durango Road in areas adjacent to tortoise habitat. The Corps also will monitor the effects of revegetation for ten years after revegetation. Revegetation and monitoring plans will be developed by the Corps and coordinated with the FWS prior to initiation of construction.	Upon completion of construction.
Temporary construction impacts	Paras 4.07a, and 4.11	NEPA	Planting of native species in disturbed areas for erosion control.	Upon completion of construction.

SECTION TABLE OF CONTENTS

DIVISION 01 - GENERAL REQUIREMENTS

SECTION 01356

STORM WATER POLLUTION PREVENTION MEASURES

PART 1 GENERAL

1.1 REFERENCES
1.2 GENERAL
1.3 SUBMITTALS
1.4 EROSION AND SEDIMENT CONTROLS
1.4.1 Stabilization Practices
1.4.1.1 Unsuitable Conditions
1.4.1.2 No Activity for Less Than 21 Days
1.4.2 Structural Practices
1.4.2.1 Silt Fences
1.4.2.2 Straw Bales
1.4.2.3 Diversion Dikes

PART 2 PRODUCTS

2.1 COMPONENTS FOR SILT FENCES
2.1.1 Filter Fabric
2.1.2 Silt Fence Stakes and Posts
2.1.3 Mill Certificate or Affidavit
2.1.4 Identification Storage and Handling
2.2 COMPONENTS FOR STRAW BALES

PART 3 EXECUTION

3.1 INSTALLATION OF SILT FENCES
3.2 INSTALLATION OF STRAW BALES
3.3 MAINTENANCE
3.3.1 Silt Fence Maintenance
3.3.2 Straw Bale Maintenance
3.3.3 Diversion Dike Maintenance
3.4 INSPECTIONS
3.4.1 General
3.4.2 Inspections Details
3.4.3 Inspection Reports

-- End of Section Table of Contents --

SECTION 01356

STORM WATER POLLUTION PREVENTION MEASURES

PART 1 GENERAL

1.1 REFERENCES

The publications listed below form a part of this specification to the extent referenced. The publications are referred to in the text by basic designation only.

AMERICAN SOCIETY FOR TESTING AND MATERIALS (ASTM)

ASTM D 4439	(2000) Geosynthetics
ASTM D 4491	(1999a) Water Permeability of Geotextiles by Permittivity
ASTM D 4533	(1991; R 1996) Trapezoid Tearing Strength of Geotextiles
ASTM D 4632	(1991; R 1997) Grab Breaking Load and Elongation of Geotextiles
ASTM D 4751	(1999a) Determining Apparent Opening Size of a Geotextile
ASTM D 4873	(2001) Identification, Storage, and Handling of Geosynthetic Rolls

1.2 GENERAL

The Contractor shall implement the storm water pollution prevention measures specified in this section in a manner which will meet the requirements of Section 01355 ENVIRONMENTAL PROTECTION, and the requirements of the National Pollution Discharge Elimination System (NPDES) permit.

1.3 SUBMITTALS

Government approval is required for submittals with a "G" designation; submittals not having a "G" designation are for information only. When used, a designation following the "G" designation identifies the office that will review the submittal for the Government. Submit the following in accordance with Section 01330, SUBMITTAL PROCEDURES:

SD-07 Certificates

Mill Certificate or Affidavit.

Certificate attesting that the Contractor has met all specified requirements.

1.4 EROSION AND SEDIMENT CONTROLS

The controls and measures required by the Contractor are described below.

1.4.1 Stabilization Practices

The stabilization practices to be implemented shall include silt fences, straw bales, soil stabilizer, geotextiles, erosion control matts, etc. On his daily CQC Report, the Contractor shall record the dates when the major grading activities occur, (e.g., clearing and grubbing, excavation, embankment, and grading); when construction activities temporarily or permanently cease on a portion of the site; and when stabilization practices are initiated. Except as provided in paragraphs UNSUITABLE CONDITIONS and NO ACTIVITY FOR LESS THAN 21 DAYS, stabilization practices shall be initiated as soon as practicable, but no more than 14 days, in any portion of the site where construction activities have temporarily or permanently ceased.

1.4.1.1 Unsuitable Conditions

Where the initiation of stabilization measures by the fourteenth day after construction activity temporarily or permanently ceases is precluded by unsuitable conditions caused by the weather, stabilization practices shall be initiated as soon as practicable after conditions become suitable.

1.4.1.2 No Activity for Less Than 21 Days

Where construction activity will resume on a portion of the site within 21 days from when activities ceased (e.g., the total time period that construction activity is temporarily ceased is less than 21 days), then stabilization practices do not have to be initiated on that portion of the site by the fourteenth day after construction activity temporarily ceased.

1.4.2 Structural Practices

Structural practices shall be implemented to divert flows from exposed soils, temporarily store flows, or otherwise limit runoff and the discharge of pollutants from exposed areas of the site. Structural practices shall be implemented in a timely manner during the construction process to minimize erosion and sediment runoff. Structural practices shall include the following devices as necessary.

1.4.2.1 Silt Fences

The Contractor shall provide silt fences as a temporary structural practice to minimize erosion and sediment runoff. Silt fences shall be properly installed to effectively retain sediment immediately after completing each phase of work where erosion would occur in the form of sheet and rill erosion (e.g. clearing and grubbing, excavation, embankment, and grading). Silt fences shall be installed in the locations indicated on the drawings. Final removal of silt fence barriers shall be upon approval by the

Contracting Officer.

1.4.2.2 Straw Bales

The Contractor shall provide bales of straw as a temporary structural practice to minimize erosion and sediment runoff. Bales shall be properly placed to effectively retain sediment immediately after completing each phase of work (e.g., clearing and grubbing, excavation, embankment, and grading) in each independent runoff area (e.g., after clearing and grubbing in a area between a ridge and drain, bales shall be placed as work progresses, bales shall be removed/replaced/relocated as needed for work to progress in the drainage area). Areas where straw bales are to be used shall be shown in the SWPPP. Final removal of straw bale barriers shall be upon approval by the Contracting Officer. Rows of bales of straw shall be provided as follows:

a. Along the downhill perimeter edge of all areas disturbed.

b. Along the top of the slope or top bank of drainage ditches, channels, swales, etc. that traverse disturbed areas.

c. Along the toe of all cut slopes and fill slopes of the construction areas.

d. Perpendicular to the flow in the bottom of existing drainage ditches, channels, swales, etc. that traverse disturbed areas or carry runoff from disturbed areas. Rows shall be spaced as shown in the SWPPP.

e. Perpendicular to the flow in the bottom of new drainage ditches, channels, and swales. Rows shall be spaced as shown in the SWPPP.

f. At the entrance to culverts that receive runoff from disturbed areas.

1.4.2.3 Diversion Dikes

Diversion dikes shall have a maximum channel slope of 2 percent and shall be adequately compacted to prevent failure. The minimum height measured from the top of the dike to the bottom of the channel shall be 0.5 m. The minimum base width shall be 1.8 m and the minimum top width shall be 0.6 m. The Contractor shall ensure that the diversion dikes are not damaged by construction operations or traffic. Diversion dikes shall be located as shown in the SWPPP.

PART 2 PRODUCTS

2.1 COMPONENTS FOR SILT FENCES

2.1.1 Filter Fabric

The geotextile shall comply with the requirements of ASTM D 4439, and shall consist of polymeric filaments which are formed into a stable network such that filaments retain their relative positions. The filament shall

consist of a long-chain synthetic polymer composed of at least 85 percent by weight of ester, propylene, or amide, and shall contain stabilizers and/or inhibitors added to the base plastic to make the filaments resistance to deterioration due to ultraviolet and heat exposure. Synthetic filter fabric shall contain ultraviolet ray inhibitors and stabilizers to provide a minimum of six months of expected usable construction life at a temperature range of -18 to 49 degrees C. The filter fabric shall meet the following requirements:

FILTER FABRIC FOR SILT SCREEN FENCE

PHYSICAL PROPERTY	TEST PROCEDURE	STRENGTH REQUIREMENT
Grab Tensile	ASTM D 4632	445 N min.
Elongation (%)		30 % max.
Trapezoid Tear	ASTM D 4533	245 N min.
Permittivity	ASTM D 4491	0.2 sec-1
AOS (U.S. Std Sieve)	ASTM D 4751	20-100

2.1.2 Silt Fence Stakes and Posts

The Contractor may use either wooden stakes or steel posts for fence construction. Wooden stakes utilized for silt fence construction, shall have a minimum cross section of 50 mm by 50 mm when oak is used and 100 mm by 100 mm when pine is used, and shall have a minimum length of 1.5 m. Steel posts (standard "U" or "T" section) utilized for silt fence construction, shall have a minimum mass of 1.98 kg per linear meter and a minimum length of 1.5 m.

2.1.3 Mill Certificate or Affidavit

A mill certificate or affidavit shall be provided attesting that the fabric and factory seams meet chemical, physical, and manufacturing requirements specified above. The mill certificate or affidavit shall specify the actual Minimum Average Roll Values and shall identify the fabric supplied by roll identification numbers. The Contractor shall submit a mill certificate or affidavit signed by a legally authorized official from the company manufacturing the filter fabric.

2.1.4 Identification Storage and Handling

Filter fabric shall be identified, stored and handled in accordance with ASTM D 4873.

2.2 COMPONENTS FOR STRAW BALES

The straw in the bales shall be stalks from oats, wheat, rye, barley, rice, or from grasses such as byhalia, bermuda, etc., furnished in air dry condition. The bales shall have a standard cross section of 350 mm by 450 mm. All bales shall be either wire-bound or string-tied. The Contractor

may use either wooden stakes or steel posts to secure the straw bales to the ground. Wooden stakes utilized for this purpose, shall have a minimum dimensions of 50 mm by 50 mm in cross section and shall have a minimum length of 1 m. Steel posts (standard "U" or "T" section) utilized for securing straw bales, shall have a minimum mass of 1.98 kg per linear meter and a minimum length of 1 m .

PART 3 EXECUTION

3.1 INSTALLATION OF SILT FENCES

Silt fences shall extend a minimum of 400 mm above the ground surface and shall not exceed 860 mm above the ground surface. Filter fabric shall be from a continuous roll cut to the length of the barrier to avoid the use of joints. When joints are unavoidable, filter fabric shall be spliced together at a support post, with a minimum 150 mm overlap, and securely sealed. A trench shall be excavated approximately 100 mm wide and 100 mm deep on the upslope side of the location of the silt fence. The 100 mm by 100 mm trench shall be backfilled and the soil compacted over the filter fabric. Silt fences shall be removed upon approval by the Contracting Officer.

3.2 INSTALLATION OF STRAW BALES

Straw bales shall be placed in a single row, lengthwise on the contour, with ends of adjacent bales tightly abutting one another. Straw bales shall be installed so that bindings are oriented around the sides rather than along the tops and bottoms of the bales in order to prevent deterioration of the bindings. The barrier shall be entrenched and backfilled. A trench shall be excavated the width of a bale and the length of the proposed barrier to a minimum depth of 100 mm. After the bales are staked and chinked (gaps filled by wedging with straw), the excavated soil shall be backfilled against the barrier. Backfill soil shall conform to the ground level on the downhill side and shall be built up to 100 mm against the uphill side of the barrier. Loose straw shall be scattered over the area immediately uphill from a straw bale barrier to increase barrier efficiency. Each bale shall be securely anchored by at least two stakes driven through the bale. The first stake or steel post in each bale shall be driven toward the previously laid bale to force the bales together. Stakes or steel pickets shall be driven a minimum 450 mm deep into the ground to securely anchor the bales.

3.3 MAINTENANCE

The Contractor shall maintain the temporary and permanent vegetation, erosion and sediment control measures, and other protective measures in good and effective operating condition by performing routine inspections to determine condition and effectiveness, by restoration of destroyed vegetative cover, and by repair of erosion and sediment control measures and other protective measures. The following procedures shall be followed to maintain the protective measures.

3.3.1 Silt Fence Maintenance

Silt fences shall be inspected in accordance with paragraph INSPECTIONS. Any required repairs shall be made promptly. Close attention shall be paid to the repair of damaged silt fence resulting from end runs and undercutting. Should the fabric on a silt fence decompose or become ineffective, and the barrier is still necessary, the fabric shall be replaced promptly. Sediment deposits shall be removed when deposits reach one-third of the height of the barrier. When a silt fence is no longer required, it shall be removed. The immediate area occupied by the fence and any sediment deposits shall be shaped to an acceptable grade.

3.3.2 Straw Bale Maintenance

Straw bale barriers shall be inspected in accordance with paragraph INSPECTIONS. Close attention shall be paid to the repair of damaged bales, end runs and undercutting beneath bales. Necessary repairs to barriers or replacement of bales shall be accomplished promptly. Sediment deposits shall be removed when deposits reach one-half of the height of the barrier. Bale rows used to retain sediment shall be turned uphill at each end of each row. When a straw bale barrier is no longer required, it shall be removed. The immediate area occupied by the bales and any sediment deposits shall be shaped to an acceptable grade.

3.3.3 Diversion Dike Maintenance

Diversion dikes shall be inspected in accordance with paragraph INSPECTIONS. Close attention shall be paid to the repair of damaged diversion dikes and necessary repairs shall be accomplished promptly. When diversion dikes are no longer required, they shall be shaped to an acceptable grade.

3.4 INSPECTIONS

3.4.1 General

The Contractor shall inspect disturbed areas of the construction site, areas used for storage of materials that are exposed to precipitation that have not been finally stabilized, stabilization practices, structural practices, other controls, and area where vehicles exit the site at least once every seven (7) calendar days and within 24 hours of the end of any storm that produces 13 mm or more rainfall at the site. Where sites have been finally stabilized, such inspection shall be conducted at least once every month.

3.4.2 Inspections Details

Disturbed areas and areas used for material storage that are exposed to precipitation shall be inspected for evidence of, or the potential for, pollutants entering the drainage system. Erosion and sediment control measures identified in the Storm Water Pollution Prevention Plan shall be observed to ensure that they are operating correctly. Discharge locations or points shall be inspected to ascertain whether erosion control measures are effective in preventing significant impacts to receiving waters. Locations where vehicles exit the site shall be inspected for evidence of offsite sediment tracking.

3.4.3 Inspection Reports

For each inspection conducted, the Contractor shall prepare a report summarizing the scope of the inspection, name(s) and qualifications of personnel making the inspection, the date(s) of the inspection, major observations relating to the implementation of the Storm Water Pollution Prevention Plan, maintenance performed, and actions taken. The report shall be furnished to the Contracting Officer within 24 hours of the inspection as a part of the Contractor's daily CQC REPORT. A copy of the inspection report shall be maintained on the job site.

-- End of Section --

SECTION TABLE OF CONTENTS

DIVISION 01 - GENERAL REQUIREMENTS

SECTION 01415

METRIC MEASUREMENTS

1.1 REFERENCES
1.2 GENERAL
1.3 USE OF MEASUREMENTS
1.3.1 Hard Metric
1.3.2 Soft Metric
1.3.3 Neutral
1.4 COORDINATION
1.5 RELATIONSHIP TO SUBMITTALS

-- End of Section Table of Contents --

SECTION 01415

METRIC MEASUREMENTS

1.1 REFERENCES

The publications listed below form a part of this specification to the extent referenced. The publications are referred to in the text by basic designation only.

AMERICAN SOCIETY FOR TESTING AND MATERIALS (ASTM)

ASTM E 380	(1993) Practice for Use of the International System of Units (SI)
ASTM E 621	(1994; R 1999el) Practice for Use of Metric (SI) Units in Building Design and Construction

1.2 GENERAL

This project includes metric units of measurements. The metric units used are the International System of Units (SI) developed and maintained by the General Conference on Weights and Measures (CGPM); the name International System of Units and the international abbreviation SI were adopted by the 11th CGPM in 1960. A number of circumstances require that both metric SI units and English inch-pound (I-P) units be included in a section of the specifications. When both metric and I-P measurements are included, the section may contain measurements for products that are manufactured to I-P dimensions and then expressed in mathematically converted metric value (soft metric) or, it may contain measurements for products that are manufactured to an industry recognized rounded metric (hard metric) dimensions but are allowed to be substituted by I-P products to comply with the law. Dual measurements are also included to indicate industry and/or Government standards, test values or other controlling factors, such as the code requirements where I-P values are needed for clarity or to trace back to the referenced standards, test values or codes.

1.3 USE OF MEASUREMENTS

Measurements shall be either in SI or I-P units as indicated, except for soft metric measurements or as otherwise authorized. When only SI or I-P measurements are specified for a product, the product shall be procured in the specified units (SI or I-P) unless otherwise authorized by the Contracting Officer. The Contractor shall be responsible for all associated labor and materials when authorized to substitute one system of units for another and for the final assembly and performance of the specified work and/or products.

1.3.1 Hard Metric

A hard metric measurement is indicated by an SI value with no expressed correlation to an I-P value, i.e., where an SI value is not an exact mathematical conversion of an I-P value, such as the use of 100 mm in lieu of 4 inches. Hard metric measurements are often used for field data such as distance from one point to another or distance above the floor. Products are considered to be hard metric when they are manufactured to metric dimensions or have an industry recognized metric designation.

1.3.2 Soft Metric

a. A soft metric measurement is indicated by an SI value which is a mathematical conversion of the I-P value shown in parentheses (e.g. 38.1 mm (1-1/2 inches)). Soft metric measurements are used for measurements pertaining to products, test values, and other situations where the I-P units are the standard for manufacture, verification, or other controlling factor. The I-P value shall govern while the metric measurement is provided for information.

b. A soft metric measurement is also indicated for products that are manufactured in industry designated metric dimensions but are required by law to allow substitute I-P products. These measurements are indicated by a manufacturing hard metric product dimension followed by the substitute I-P equivalent value in parentheses (e.g., 190 x 190 x 390 mm (7-5/8 x 7-5/8 x 15-5/8 inches)).

1.3.3 Neutral

A neutral measurement is indicated by an identifier which has no expressed relation to either an SI or an I-P value (e.g., American Wire Gage (AWG) which indicates thickness but in itself is neither SI nor I-P).

1.4 COORDINATION

Discrepancies, such as mismatches or product unavailability, arising from use of both metric and non-metric measurements and discrepancies between the measurements in the specifications and the measurements in the drawings shall be brought to the attention of the Contracting Officer for resolution.

1.5 RELATIONSHIP TO SUBMITTALS

Submittals for Government approval or for information only shall cover the SI or I-P products actually being furnished for the project. The Contractor shall submit the required drawings and calculations in the same units used in the contract documents describing the product or requirement unless otherwise instructed or approved. The Contractor shall use ASTM E 380 and ASTM E 621 as the basis for establishing metric measurements required to be used in submittals.

-- End of Section --

SECTION TABLE OF CONTENTS

DIVISION 01 - GENERAL REQUIREMENTS

SECTION 01420

SOURCES FOR REFERENCE PUBLICATIONS

1. GENERAL
1.1 REFERENCES
1.2 ORDERING INFORMATION

-- End of Section Table of Contents --

SECTION 01420

SOURCES FOR REFERENCE PUBLICATIONS

1. GENERAL

1.1 REFERENCES

Various publications are referenced in other sections of the specifications to establish requirements for the work. These references are identified in each section by document number, date and title. The document number used in the citation is the number assigned by the standards producing organization, (e.g. ASTM B 564 Nickel Alloy Forgings). However, when the standards producing organization has not assigned a number to a document, an identifying number has been assigned for reference purposes.

1.2 ORDERING INFORMATION

The addresses of the standards publishing organizations whose documents are referenced in other sections of these specifications are listed below, and if the source of the publications is different from the address of the sponsoring organization, that information is also provided. Documents listed in the specifications with numbers which were not assigned by the standards producing organization should be ordered from the source by title rather than by number.

ACI INTERNATIONAL (ACI)

P.O. Box 9094
Farmington Hills, MI 48333-9094
Ph: 248-848-3700
Fax: 248-848-3701
Internet: http://www.aci-int.org
AOK 6/00
LOK 6/00

AMERICAN ASSOCIATION OF STATE HIGHWAY AND TRANSPORTATION OFFICIALS (AASHTO)

444 N. Capital St., NW, Suite 249
Washington, DC 20001
Ph: 800-231-3475 202-624-5800
Fax: 800-525-5562 202-624-5806
Internet: www.aashto.org
AOK 6/00
LOK 6/00

NOTE: AASHTO documents with numbers beginning with M or T are available only in Standard Specifications for Transportation Materials and Methods of Sampling and Testing, 1998 @$289.00\X

AMERICAN CONCRETE PIPE ASSOCIATION (ACPA)

222 West Las Colinas Blvd., Suite 641
Irving, TX 75039-5423
Ph: 972-506-7216
Fax: 972-506-7682
Internet: http://www.concrete-pipe.org
e-mail: info@concrete-pipe.org
AOK 6/00
LOK 6/00

AMERICAN INSTITUTE OF STEEL CONSTRUCTION (AISC)

One East Wacker Dr., Suite 3100
Chicago, IL 60601-2001
Ph: 312-670-2400
Publications: 800-644-2400
Fax: 312-670-5403
Internet: www.aisc.org
AOK 6/00
LOK 6/00

AMERICAN INSTITUTE OF TIMBER CONSTRUCTION (AITC)

7012 So. Revere Parkway, Suite 140
Englewood, CO 80112
Ph: 303-792-9559
Fax: 303-792-0669
Internet: www.aitc-glulam.org
AOK 6/00
LOK 6/00

AMERICAN IRON AND STEEL INSTITUTE (AISI)

1101 17th St., NW Suite 1300
Washington, DC 20036
Ph: 202-452-7100
AOK 6/00
LOK 6/00

AMERICAN NATIONAL STANDARDS INSTITUTE (ANSI)

11 West 42nd St
New York, NY 10036
Ph: 212-642-4900
Fax: 212-398-0023
Internet: www.ansi.org/
Note: Documents beginning with the letter "S" can be ordered from:
Acoustical Society of America
P. O. Box 1020
Sweickley, PA 15143-9998
Ph: 412-741-1979
Fax: 412-741-0609

Internet: asa.aip.org
AOK 6/00
LOK 6/00

AMERICAN NURSERY AND LANDSCAPE ASSOCIATION (ANLA)

1250 I St., NW, Suite 500
Washington, DC 20005-3922
Ph: 202-789-2900
FAX: 202-789-1893
AOK 6/00
LOK 6/00

AMERICAN SOCIETY FOR NONDESTRUCTIVE TESTING (ASNT)

1711 Arlingate Lane
P.O. Box 28518
Columbus, OH 43228-0518
Ph: 800-222-2768
Fax: 614-274-6899
Internet: www.asnt.org
AOK 6/00
LOK 6/00

AMERICAN SOCIETY FOR QUALITY (ASQ)

611 East Wisconsin Ave.
P.O. Box 3005
Milwaukee, WI 53201-3005
Ph: 800-248-1946
Fax: 414-272-1734
Internet: http://www.asq.org
AOK 6/00
LOK 6/00

AMERICAN SOCIETY FOR TESTING AND MATERIALS (ASTM)

100 Barr Harbor Drive
West Conshohocken, PA 19428-2959
Ph: 610-832-9585
Fax: 610-832-9555
Internet: www.astm.org
AOK 6/00
LOK 6/00

NOTE: The annual ASTM Book of Standards (66 Vol) is available for $3500.00. Prices of individual standards vary.

AMERICAN SOCIETY OF CIVIL ENGINEERS (ASCE)

1801 Alexander Bell Drive
Reston, VA 20190-4400
Ph: 703-295-6300 - 800-548-2723
Fax: 703-295-6222

Internet: www.asce.org
e-mail: marketing@asce.org
AOK 6/00
LOK 6/00

AMERICAN SOCIETY OF SANITARY ENGINEERING FOR PLUMBING AND SANITARY RESEARCH (ASSE)

901 Canterbury, Suite A
Westlake, OH 44145
Ph: 440-835-3040
Fax: 440-835-3488
E-mail: asse@ix.netcom.com
Internet: www.asse-plumbing.org
AOK 6/00
LOK 6/00

AMERICAN WATER WORKS ASSOCIATION(AWWA)

6666 West Quincy
Denver, CO 80235
Ph: 800-926-7337 - 303-794-7711
Fax: 303-347-0804
Internet: www.awwa.org
AOK 6/00
LOK 6/00

AMERICAN WELDING SOCIETY (AWS)

550 N.W. LeJeune Road
Miami, FL 33126
Ph: 800-443-9353 - 305-443-9353
Fax: 305-443-7559
Internet: http://www.amweld.org
AOK 6/00
LOK 6/00

AMERICAN WOOD-PRESERVERS' ASSOCIATION (AWPA)

P.O. Box 5690
Grandbury, TX 76049-0690
Ph: 817-326-6300
Fax: 817-326-6306
Internet: http://www.awpa.com
AOK 8/00
LOK 6/00

NOTE: AWPA Book of Standards is published yearly @$75.00; individual standards may be ordered separately for $12.00 to $28.00 each.

ARMY ENVIRONMENTAL CENTER (AEC)

5179 Hoadley Road

Aberdeen Proving Ground, MD 21010-5401
Internet: www.aec.army.mil
AOK 8/00

ASPHALT INSTITUTE (AI)

Research Park Dr.
P.O. Box 14052
Lexington, KY 40512-4052
Ph: 606-288-4960
Fax: 606-288-4999
Internet: www.asphaltinstitute.org
AOK 8/00
LOK 6/00

ASSOCIATION OF IRON AND STEEL ENGINEERS (AISE)

Three Gateway Center, Suite 1900
Pittsburgh, PA 15222-1004
Ph: 412-281-6323
Fax: 412-281-4657
Internet: http://www.aise.org
AOK 8/00
LOK 6/00

BUILDERS HARDWARE MANUFACTURERS ASSOCIATION (BHMA)

355 Lexington Ave.
17th floor
New York, NY 10017-6603
Ph: 212-297-2100
Fax: 212-370-9047
Internet: www.buildershardware.com
AOK 8/00
LOK 6/00

BUILDING OFFICIALS & CODE ADMINISTRATORS INTERNATIONAL (BOCA)

4051 W. Flossmoor Rd.
Country Club Hills, IL 60478
Ph: 708-799-2300
Fax: 708-799-4981
Internet: www.bocai.org
AOK 8/00
LOK 6/00

BUREAU OF RECLAMATION (BOR)

Denver Federal Center
P.O. Box 25007
Denver, CO 80225
Ph: 303-445-2080
Order from:
National Technical Information

Services (NTIS)
5285 Port Royal Rd.
Springfield, VA 22161
Ph: 703-605-6000
Fax: 703-605-6900
Internet: www.ntis.org
AOK 8/00
LOK 6/00

CALIFORNIA DEPARTMENT OF TRANSPORTATION (CDT)

Publication Distribution Unit
1900 Royal Oaks Dr.
Sacramento, CA 95815
Ph: 916-445-3520 or 916-227-7000 (CA Transportation Lab)
Fax: 916-324-8997

CODE OF FEDERAL REGULATIONS (CFR)

Order from:
Government Printing Office
Washington, DC 20402
Ph: 202-512-1800
Fax: 202-275-7703
Internet: http://www.gpo.gov
AOK 8/00
LOK 6/00

CONCRETE REINFORCING STEEL INSTITUTE (CRSI)

933 N. Plum Grove Rd.
Schaumburg, IL 60173-4758
Ph: 847-517-1200
Fax: 847-517-1206
Internet: www.crsi.org
AOK 8/00
LOK 6/00

CORPS OF ENGINEERS (COE)

Order from:
U.S. Army Engineer Waterways Experiment Station
ATTN: Technical Report Distribution Section, Services
Branch, TIC
3909 Halls Ferry Rd.
Vicksburg, MS 39180-6199
Ph: 601-634-2664
Fax: 601-634-2388
Internet: www.usace.army.mil
AOK 8/00
LOK 6/00

NOTE: COE Handbook for Concrete and Cement (Documents w/prefix CRD-C) (1949-present; 2 Vol) free to Government offices; $10.00

plus $8.00 per yr for 4 qtrly supplements to others). Individual documents, single copies free. Order from address above.

DEPARTMENT OF COMMERCE (DOC)

Order From:
National Technical Information Service
5285 Port Royal Road
Springfield, VA 22161
Ph: 703-605-6000
Fax: 703-605-6900
Internet: http://www.ntis.gov
AOK 8/00
LOK 6/00

DUCTILE IRON PIPE RESEARCH ASSOCIATION (DIPRA)

245 Riverchase Parkway East, Suite 0
Birmingham, AL 35244
Ph: 205-402-8700
Fax: 205-402-8730
Internet: www.dipra.org
E-mail: info@dipra.org
AOK 8/00
LOK 6/00

ENGINEERING MANUALS (EM)

USACE Publications Depot
Attn: CEIM-SP-D
2803 52nd Avenue
Hyattsville, MD 20781-1102
Ph: 301-394-0081
Fax: 301-394-0084
Internet: www.usace.army.mil
AOK 8/00
LOK 6/00

ENGINEERING PAMPHLETS (EP)

USACE Publications Depot
Attn: CEIM-SP-D
2803 52nd Avenue
Hyattsville, MD 20781-1102
Ph: 301-394-0081
Fax: 301-394-0084
Internet: www.usace.army.mil
AOK 8/00
LOK 6/00

ENGINEERING REGULATIONS (ER)

USACE Publications Depot
Attn: CEIM-SP-D

2803 52nd Avenue
Hyattsville, MD 20781-1102
Ph: 301-394-0081
Fax: 301-394-0084
Internet: www.usace.army.mil
AOK 8/00
LOK 6/00

ENVIRONMENTAL PROTECTION AGENCY (EPA)

Ariel Rios Building
1200 Pennsylvania Avenue, N.W.
Washington, DC 20460
Ph: 202-260-2090
FAX: 202-260-6257
Internet: http://www.epa.gov
NOTE: Some documents are available only from: National Technical Information Services (NTIS)
5285 Port Royal Rd.
Springfield, VA 22161
Ph: 800-553-6847
Fax: 703-321-8547
Internet: www.ntis.gov
AOK 8/00
LOK 6/00

EXPANSION JOINT MANUFACTURERS ASSOCIATION (EJMA)

25 N Broadway
Tarrytown, NY 10591
Ph: 914-332-0040
Fax: 914-332-1541
Internet: www.ejma.org
AOK 8/00
LOK 6/00

FEDERAL HIGHWAY ADMINISTRATION (FHWA)

Office of Highway Safety (HHS-31)
400 Seventh St., SW
Washington, DC 20590-0001
Ph: 202-366-0411
Fax: 202-366-2249
Internet: www.fhwa.dot.gov
Order from:
Government Printing Office
Superintendent of Documents
Washington, DC 20402
Ph: 202-783-3238
AOK 8/00
LOK 6/00

FEDERAL SPECIFICATIONS (FS)

Order from:
General Services Administration
Federal Supply Service Bureau
470 L'Enfant Plaza, S.W.
Washington, DC 20407
Ph: 202-619-8925
Fax: 202-619-8978
Internet: http://pub.fss.gsa.gov/

FEDERAL STANDARDS (FED-STD)

Order from:
General Services Administration
Federal Supply Service Bureau
470 E L'Enfant Plaza, S.W.
Washington, DC 20407
Ph: 202-619-8925
Fax: 202-619-8978
Internet: http://pub.fss.gsa.gov/

GEOLOGICAL SOCIETY OF AMERICA (GSA)

P.O. Box 9140
Boulder, CO 80301-9140
3300 Penrose Place
Boulder, CO 80301-1806
Ph: 800-447-2020
Fax: 303-447-1133
Internet: www.geosociety.org
AOK 8/00
LOK 6/00

GEOSYNTHETIC INSTITUTE (GSI)

475 Kedron Ave.
Folsom, PA 19033-1208
Ph: 610-522-8440
Fax: 610-522-8441
AOK 8/00
LOK 6/00

HARDWOOD PLYWOOD & VENEER ASSOCIATION (HPVA)

1825 Michael Faraday Dr.
P.O. Box 2789
Reston, VA 20195-0789
Ph: 703-435-2900
Fax: 703-435-2537
Internet: www.hpva.org
AOK 8/00
LOK 6/00

HYDRAULIC INSTITUTE (HI)

9 Sylvan Way, Suite 180
Parsippany, NJ 07054-3802
Ph: 888-786-7744 or 973-267-9700
Fax: 973-267-9055
Internet: www.pumps.org
AOK 8/00
LOK 6/00

INTERNATIONAL ORGANIZATION FOR STANDARDIZATION (ISO)

1, rue de Varembe'
Case Postale 56
CH-1211 Geneve 20
Switzerland
Ph: 41-22-749-0111
Fax: 41-22-733-3430
Internet: www.iso.ch
e-mail: central@iso.ch
AOK 8/00
LOK 6/00

IRON & STEEL SOCIETY (ISS)

186 Thornhill Rd
Warrendale, PA 15086-7528
Ph: 724-776-1353 Ext 1
Fax: 724-776-0430
E-Mail: custserv@issource.org
Internet: www.issource.org
AOK 8/00
LOK 6/00

NATIONAL CABLE TELEVISION ASSOCIATION (NCTA)

1724 Massachusetts Ave. NW
Washington, DC 20036-1969
Ph: 202-775-3629
Fax: 202-775-1055
Internet: www.ncta.com
AOK 8/00
LOK 6/00

NATIONAL DRILLING ASSOCIATION (NDA)

6089 Frantz Rd., Suite 101
Dublin, OH 43017
Ph: 614-798-8080
Fax: 614-798-2255
email: info@nda4U.com
Internet: http://www.nda4U.com
AOK 8/00
LOK 6/00

NATIONAL ELECTRICAL MANUFACTURERS ASSOCIATION (NEMA)

1300 N. 17th St., Suite 1847
Rosslyn, VA 22209
Ph: 703-841-3200
Fax: 703-841-3300
Internet: http//www.nema.org/
AOK 8/00
LOK 6/00

NATIONAL FIRE PROTECTION ASSOCIATION (NFPA)

1 Batterymarch Park
P.O. Box 9101
Quincy, MA 02269-9101
Ph: 617-770-3000
Fax: 617-770-0700
Internet: www.nfpa.org
NOTE: The complete set of 1997 NFPA National Fire Codes (13 Vol.) is available for $835.00.
AOK 8/00
LOK 8/00

NATIONAL HARDWOOD LUMBER ASSOCIATION (NHLA)

P.O. Box 34518
Memphis, TN 38184-0518
Ph: 901-377-1818
Fax: 901-382-6419
e-mail: nhla@natlhardwood.org
Internet: natlhardwood.org
AOK 8/00
LOK 6/00

NATIONAL INSTITUTE FOR CERTIFICATION IN ENGINEERING TECHNOLOGIES (NICET)

1420 King Street
Alexandria, VA 22314-2794
Ph: 888-476-4238
Internet: www.nicet.org
AOK 8/00
LOK 6/00

NATIONAL INSTITUTE FOR OCCUPATIONAL SAFETY AND HEALTH (NIOSH)

Mail Stop C-13
4676 Columbia Parkway
Cincinnati, OH 45226-1998
Ph: 800-356-4676
Internet: http://www.cdc.gov/niosh/homepage.html
To order pubs for which a fee is charged, order from:
Superintendent of Documents
Government Printing Office
Washington, DC 20402-9325

Ph: 202-512-1800
Fax: 202-512-2250
AOK 8/00
LOK 6/00

NATIONAL INSTITUTE OF STANDARDS AND TECHNOLOGY (NIST)

Department of Commerce
Gaithersburg, MD 20899-0001
Ph: 301-975-4025
Fax: 301-926-1630
Order Publications From:
Superintendent of Documents
U.S. Government Printing Office (GPO)
Washington, DC 20402
Ph: 202-512-1800
Fax: 202-512-2250
or
National Technical Information Services (NTIS)
5285 Port Royal Rd.
Springfield, VA 22161
Ph: 800-553-6847
Fax: 703-321-8547
Internet: www.gov/ntis.gov
AOK 8/00
LOK 6/00

NATIONAL READY-MIXED CONCRETE ASSOCIATION (NRMCA)

900 Spring St.
Silver Spring, MD 20910
Ph: 301-587-1400
Fax: 301-585-4219
Internet: www.nrmca.org
AOK 8/00
LOK 6/00

PIPE FABRICATION INSTITUTE (PFI)

PMB 323
611 Pennsylvania Ave. SE
Washington, DC 20003
Ph: 514-634-3434
Fax: 514-634-9736
Internet: www.pfi-institute.org
e-mail: pfi@pfi-institute.org
AOK 8/00
LOK 6/00

PLASTIC PIPE AND FITTINGS ASSOCIATION (PPFA)

800 Roosevelt Rd., Bldg C, Suite 20
Glen Ellyn, IL 60137
Ph: 630-858-6540

Fax: 630-790-3095
Internet: www.ppfahome.org
AOK 8/00
LOK 6/00

PLASTICS PIPE INSTITUTE (PPI)

1825 Connecticut Ave. NW
Washington, D. C. 20009
Ph: 202-462-9607
Fax: 202-462-9779
Internet: www.plasticpipe.org
AOK 8/00
LOK 6/00

PLUMBING AND DRAINAGE INSTITUTE (PDI)

45 Bristol Dr.
South Easton, MA 02375
Ph: 508-230-3516 or 800-589-8956
Fax: 508-230-3529
Internet: www.pdionline.org
E-Mail: info@pdionline.org
AOK 8/00
LOK 6/00

PLUMBING AND PIPING INDUSTRY COUNCIL (PPIC)

9450 SW Commerce Circle, Suite 310
Wilsonville, OR 97070-9626
Ph: 503-682-7919

PRECAST/PRESTRESSED CONCRETE INSTITUTE (PCI)

209 West Jackson Blvd.
Chicago, IL 60606-6938
Ph: 312-786-0300
Fax: 312-786-0353
Internet: www.pci.org
e-mail: info@pci.org
AOK 8/00
LOK 6/00

RUBBER MANUFACTURERS ASSOCIATION (RMA)

1400 K St., NW, Suite 900
Washington, D. C. 20005
Ph: 202-682-4800
Fax: 202-682-4854
Internet: www.rma.org
Order Publications from:
The Mail Room
P. O. Box 3147
Medina, OH 44258

Ph: 800-325-5095 EXT 242 or 330-723-2978
Fax: 330-725-0576
AOK 8/00
LOK 6/00

RURAL UTILITIES SERVICE (RUS)

ATTN: Publications
14th and Independence Ave., SW, Room 4028-S
Washington, DC 20250
Ph: 202-720-8674 OR 202-720-8679
Fax: 202-205-3654
Internet: www.usda.gov/rus

SCREEN MANUFACTURERS ASSOCIATION (SMA)

2850 South Ocean Boulevard, Suite 311
Palm Beach, FL 33480-5535
Ph: 561-533-0991
Fax: 561-533-7466
e-mail: fscottfitzgerald@compuserve.com
Internet: www.eren.doe.gov
AOK 8/00
LOK 6/00

THE SOCIETY FOR PROTECTIVE COATINGS (SSPC)

40 24th Street, 6th Floor
Pittsburgh, PA 15222-4656
Ph: 412-281-2331
Fax: 412-281-9992
Internet: www.sspc.org
AOK 8/00
LOK 6/00

NOTE: SSPC documents, except as noted otherwise, are available only as a part of the 1995 Steel Structures Painting Manual, 7th Edition @ $115.00.

STEEL DECK INSTITUTE (SDI)

P.O. Box 25
Fox River Grove, IL 60021-0025
Ph: 847-462-1930
Fax: 847-462-1940
Internet: http://www.sdi.org
e-mail: Steve@sdi.org
AOK 8/00
LOK 6/00

STEEL JOIST INSTITUTE (SJI)

3127 Tenth Ave., North Ext.
Myrtle Beach, SC 29577-6760

Ph: 843-626-1995
Fax: 843-626-5565
Internet: www.steeljoist.org
AOK 8/00
LOK 6/00

UNDERWRITERS LABORATORIES (UL)

333 Pfingsten Rd.
Northbrook, IL 60062-2096
Ph: 847-272-8800
Fax: 847-272-8129
Internet: http://www.ul.com/
e-mail: northbrook@us.ul.com
AOK 8/00
LOK 6/00

Note: First price is for the standard only. Second price is for the standard including the Revision Subscription Service.

UNI-BELL PVC PIPE ASSOCIATION (UBPPA)

2655 Villa Creek Dr., Suite 155
Dallas, TX 75234
Ph: 214-243-3902
Fax: 214-243-3907
Internet: www.uni-bell.org
e-mail: info@uni-bell.org
AOK 8/00
LOK 6/00

U. S. ARMY ENVIORNMENTAL HYGIENE AGENCY (USAEHA)

Waste Disposal Engineering Division
Aberdeen Proving Ground, MD 21010-5422
Ph: 410-436-3652

WATER ENVIRONMENT FEDERATION (WEF)

601 Wythe St.
Alexandria, VA 22314-1994
Ph: 703-684-2452
Fax: 703-684-2492
Internet: www.wef.org
AOK 8/00
LOK 6/00

WATER QUALITY ASSOCIATION (WQA)

4151 Naperville Rd.
Lisle, IL 60532
Ph: 630-505-0160
Fax: 630-505-9637
Internet: www.wqa.org

e-mail: info@mail.wqa.org
AOK 8/00
LOK 6/00

WEST COAST LUMBER INSPECTION BUREAU (WCLIB)

P.O. Box 23145
Portland, OR 97281
Ph: 503-639-0651
Fax: 503-684-8928
internet: www.wclib.org
e-mail: info@wclib.org
AOK 8/00
LOK 6/00

WESTERN WOOD PRESERVERS INSTITUTE (WWPI)

7017 N.E. Highway 99 # 108
Vancover, WA 98665
Ph: 360-693-9958
Fax: 360-693-9967
Internet: www.awpi.org/wwpi
e-mail: wwpi@teleport.com
AOK 8/00
LOK 6/00

WESTERN WOOD PRODUCTS ASSOCIATION (WWPA)

Yeon Bldg.
522 SW 5th Ave.
Suite 500
Portland, OR 97204-2122
Ph: 503-224-3930
Fax: 503-224-3934
Internet: www.wwpa.org
e-mail: info@wwpa.org
AOK 8/00
LOK 6/00

-- End of Section --

SECTION TABLE OF CONTENTS

DIVISION 01 - GENERAL REQUIREMENTS

SECTION 01451

CONTRACTOR QUALITY CONTROL

PART 1 GENERAL

1.1 REFERENCES
1.2 PAYMENT

PART 2 PRODUCTS (Not Applicable)

PART 3 EXECUTION

3.1 GENERAL REQUIREMENTS
3.2 QUALITY CONTROL PLAN
3.2.1 Content of the CQC Plan
3.2.2 Acceptance of Plan
3.2.3 Notification of Changes
3.3 COORDINATION MEETING
3.4 QUALITY CONTROL ORGANIZATION
3.4.1 Personnel Requirements
3.4.2 CQC System Manager
3.4.3 CQC Personnel
3.4.4 Additional Requirement
3.4.5 Organizational Changes
3.5 SUBMITTALS AND DELIVERABLES
3.6 CONTROL
3.6.1 Preparatory Phase
3.6.2 Initial Phase
3.6.3 Follow-up Phase
3.6.4 Additional Preparatory and Initial Phases
3.7 TESTS
3.7.1 Testing Procedure
3.7.2 Testing Laboratories
3.7.2.1 Capability Check
3.7.2.2 Capability Recheck
3.7.3 Onsite Laboratory
3.7.4 Furnishing or Transportation of Samples for Testing
3.8 COMPLETION INSPECTION
3.8.1 Punch-Out Inspection
3.8.2 Pre-Final Inspection
3.8.3 Final Acceptance Inspection
3.9 DOCUMENTATION
3.10 SAMPLE FORMS
3.11 NOTIFICATION OF NONCOMPLIANCE

-- End of Section Table of Contents --

SECTION 01451

CONTRACTOR QUALITY CONTROL

PART 1 GENERAL

1.1 REFERENCES

The publications listed below form a part of this specification to the extent referenced. The publications are referred to in the text by basic designation only.

AMERICAN SOCIETY FOR TESTING AND MATERIALS (ASTM)

ASTM D 3740	(2001) Minimum Requirements for Agencies Engaged in the Testing and/or Inspection of Soil and Rock as Used in Engineering Design and Construction
ASTM E 329	(2000b) Agencies Engaged in the Testing and/or Inspection of Materials Used in Construction

1.2 PAYMENT

Separate payment will not be made for providing and maintaining an effective Quality Control program, and all costs associated therewith shall be included in the applicable unit prices or lump-sum prices contained in the Bidding Schedule.

PART 2 PRODUCTS (Not Applicable)

PART 3 EXECUTION

3.1 GENERAL REQUIREMENTS

The Contractor is responsible for quality control and shall establish and maintain an effective quality control system in compliance with the Contract Clause titled "Inspection of Construction." The quality control system shall consist of plans, procedures, and organization necessary to produce an end product which complies with the contract requirements. The system shall cover all construction operations, both onsite and offsite, and shall be keyed to the proposed construction sequence. The project manager will be held responsible for the quality of work on the job and is subject to removal by the Contracting Officer for non-compliance with the quality requirements specified in the contract. The project manager in this context shall be responsible for the overall construction activities at the site, including quality and production. The project manager shall maintain a physical presence at the site at all times, except as otherwise acceptable to the Contracting Officer, and shall be responsible for all construction and construction related activities at the site.

3.2 QUALITY CONTROL PLAN

The Contractor shall furnish for review by the Government, not later than 10 days after receipt of notice to proceed, the Contractor Quality Control (CQC) Plan proposed to implement the requirements of the Contract Clause titled "Inspection of Construction." The plan shall identify personnel, procedures, control, instructions, tests, records, and forms to be used. The Government will consider an interim plan for the first 30 days of operation. Construction will be permitted to begin only after acceptance of the CQC Plan or acceptance of an interim plan applicable to the particular feature of work to be started. Work outside of the features of work included in an accepted interim plan will not be permitted to begin until acceptance of a CQC Plan or another interim plan containing the additional features of work to be started.

3.2.1 Content of the CQC Plan

The CQC Plan shall include, as a minimum, the following to cover all construction operations, both onsite and offsite, including work by subcontractors, fabricators, suppliers, and purchasing agents:

a. A description of the quality control organization, including a chart showing lines of authority and acknowledgment that the CQC staff shall implement the three phase control system for all aspects of the work specified. The staff shall include a CQC System Manager who shall report to the project manager.

b. The name, qualifications (in resume format), duties, responsibilities, and authorities of each person assigned a CQC function.

c. A copy of the letter to the CQC System Manager signed by an authorized official of the firm which describes the responsibilities and delegates sufficient authorities to adequately perform the functions of the CQC System Manager, including authority to stop work which is not in compliance with the contract. The CQC System Manager shall issue letters of direction to all other various quality control representatives outlining duties, authorities, and responsibilities. Copies of these letters shall also be furnished to the Government.

d. Procedures for scheduling, reviewing, certifying, and managing submittals, including those of subcontractors, offsite fabricators, suppliers, and purchasing agents. These procedures shall be in accordance with Section 01330 SUBMITTAL PROCEDURES.

e. Control, verification, and acceptance testing procedures for each specific test to include the test name, specification paragraph requiring test, feature of work to be tested, test frequency, and person responsible for each test. (Laboratory facilities will be approved by the Contracting Officer.)

f. Procedures for tracking preparatory, initial, and follow-up

control phases and control, verification, and acceptance tests including documentation.

g. Procedures for tracking construction deficiencies from identification through acceptable corrective action. These procedures shall establish verification that identified deficiencies have been corrected.

h. Reporting procedures, including proposed reporting formats.

i. A list of the definable features of work. A definable feature of work is a task which is separate and distinct from other tasks, has separate control requirements, and may be identified by different trades or disciplines, or it may be work by the same trade in a different environment. Although each section of the specifications may generally be considered as a definable feature of work, there are frequently more than one definable features under a particular section. This list will be agreed upon during the coordination meeting.

3.2.2 Acceptance of Plan

Acceptance of the Contractor's plan is required prior to the start of construction. Acceptance is conditional and will be predicated on satisfactory performance during the construction. The Government reserves the right to require the Contractor to make changes in his CQC Plan and operations including removal of personnel, as necessary, to obtain the quality specified.

3.2.3 Notification of Changes

After acceptance of the CQC Plan, the Contractor shall notify the Contracting Officer in writing of any proposed change. Proposed changes are subject to acceptance by the Contracting Officer.

3.3 COORDINATION MEETING

After the Preconstruction Conference, before start of construction, and prior to acceptance by the Government of the CQC Plan, the Contractor shall meet with the Contracting Officer or Authorized Representative and discuss the Contractor's quality control system. The CQC Plan shall be submitted for review a minimum of 10 calendar days prior to the Coordination Meeting. During the meeting, a mutual understanding of the system details shall be developed, including the forms for recording the CQC operations, control activities, testing, administration of the system for both onsite and offsite work, and the interrelationship of Contractor's Management and control with the Government's Quality Assurance. Minutes of the meeting shall be prepared by the Government and signed by both the Contractor and the Contracting Officer. The minutes shall become a part of the contract file. There may be occasions when subsequent conferences will be called by either party to reconfirm mutual understandings and/or address deficiencies in the CQC system or procedures which may require corrective action by the Contractor.

3.4 QUALITY CONTROL ORGANIZATION

3.4.1 Personnel Requirements

The requirements for the CQC organization are a CQC System Manager and sufficient number of additional qualified personnel to ensure safety and contract compliance. The Safety and Health Manager shall receive direction and authority from the CQC System Manager and shall serve as a member of the CQC staff. Personnel identified in the technical provisions as requiring specialized skills to assure the required work is being performed properly will also be included as part of the CQC organization. The Contractor's CQC staff shall maintain a presence at the site at all times during progress of the work and have complete authority and responsibility to take any action necessary to ensure contract compliance. The CQC staff shall be subject to acceptance by the Contracting Officer. The Contractor shall provide adequate office space, filing systems and other resources as necessary to maintain an effective and fully functional CQC organization. Complete records of all letters, material submittals, show drawing submittals, schedules and all other project documentation shall be promptly furnished to the CQC organization by the Contractor. The CQC organization shall be responsible to maintain these documents and records at the site at all times, except as otherwise acceptable to the Contracting Officer.

3.4.2 CQC System Manager

The Contractor shall identify as CQC System Manager an individual within the onsite work organization who shall be responsible for overall management of CQC and have the authority to act in all CQC matters for the Contractor. The CQC System Manager shall be a graduate engineer, a graduate of construction management, or construction person with a minimum of 5 years construction experience on construction similar to this contract. This CQC System Manager shall be on the site at all times during construction and shall be employed by the prime Contractor. The CQC System Manager shall be assigned no other duties. An alternate for the CQC System Manager shall be identified in the plan to serve in the event of the System Manager's absence. The requirements for the alternate shall be the same as for the designated CQC System Manager.

3.4.3 CQC Personnel

In addition to CQC personnel specified elsewhere in the contract, the Contractor shall provide as part of the CQC organization specialized personnel to assist the CQC System Manager for the following areas: civil, structural, materials technician. These individuals may be employees of the prime or subcontractor; be responsible to the CQC System Manager; be physically present at the construction site during work on their areas of responsibility; have the necessary education and/or experience in accordance with the experience matrix listed herein. These individuals may perform other duties but must be allowed sufficient time to perform their assigned quality control duties as described in the Quality Control Plan.

Experience Matrix

	Area	Qualifications
a.	Civil	Graduate Civil Engineer with 2 years experience in the type of work being performed on this project or technician with 5 yrs related experience
b.	Structural	Graduate Structural Engineer with 2 yrs experience or person with 5 yrs related experience
c.	Concrete, Pavements and Soils	Materials Technician with 2 yrs experience for the appropriate area

3.4.4 Additional Requirement

In addition to the above experience and education requirements the CQC System Manager shall have completed the course entitled "Construction Quality Management For Contractors".

3.4.5 Organizational Changes

The Contractor shall maintain the CQC staff at full strength at all times. When it is necessary to make changes to the CQC staff, the Contractor shall revise the CQC Plan to reflect the changes and submit the changes to the Contracting Officer for acceptance.

3.5 SUBMITTALS AND DELIVERABLES

Submittals, if needed, shall be made as specified in Section 01330 SUBMITTAL PROCEDURES. The CQC organization shall be responsible for certifying that all submittals and deliverables are in compliance with the contract requirements.

3.6 CONTROL

Contractor Quality Control is the means by which the Contractor ensures that the construction, to include that of subcontractors and suppliers, complies with the requirements of the contract. At least three phases of control shall be conducted by the CQC System Manager for each definable feature of work as follows:

3.6.1 Preparatory Phase

This phase shall be performed prior to beginning work on each definable feature of work, after all required plans/documents/materials are approved/accepted, and after copies are at the work site. This phase shall

include:

a. A review of each paragraph of applicable specifications, reference codes, and standards. A copy of those sections of referenced codes and standards applicable to that portion of the work to be accomplished in the field shall be made available by the Contractor at the preparatory inspection. These copies shall be maintained in the field and available for use by Government personnel until final acceptance of the work.

b. A review of the contract drawings.

c. A check to assure that all materials and/or equipment have been tested, submitted, and approved.

d. Review of provisions that have been made to provide required control inspection and testing.

e. Examination of the work area to assure that all required preliminary work has been completed and is in compliance with the contract.

f. A physical examination of required materials, equipment, and sample work to assure that they are on hand, conform to approved shop drawings or submitted data, and are properly stored.

g. A review of the appropriate activity hazard analysis to assure safety requirements are met.

h. Discussion of procedures for controlling quality of the work including repetitive deficiencies. Document construction tolerances and workmanship standards for that feature of work.

i. A check to ensure that the portion of the plan for the work to be performed has been accepted by the Contracting Officer.

j. Discussion of the initial control phase.

k. The Government shall be notified at least 48 hours in advance of beginning the preparatory control phase. This phase shall include a meeting conducted by the CQC System Manager and attended by the superintendent, other CQC personnel (as applicable), and the foreman responsible for the definable feature. The results of the preparatory phase actions shall be documented by separate minutes prepared by the CQC System Manager and attached to the daily CQC report. The Contractor shall instruct applicable workers as to the acceptable level of workmanship required in order to meet contract specifications.

3.6.2 Initial Phase

This phase shall be accomplished at the beginning of a definable feature of work. The following shall be accomplished:

a. A check of work to ensure that it is in full compliance with contract requirements. Review minutes of the preparatory meeting.

b. Verify adequacy of controls to ensure full contract compliance. Verify required control inspection and testing.

c. Establish level of workmanship and verify that it meets minimum acceptable workmanship standards. Compare with required sample panels as appropriate.

d. Resolve all differences.

e. Check safety to include compliance with and upgrading of the safety plan and activity hazard analysis. Review the activity analysis with each worker.

f. The Government shall be notified at least 48 hours in advance of beginning the initial phase. Separate minutes of this phase shall be prepared by the CQC System Manager and attached to the daily CQC report. Exact location of initial phase shall be indicated for future reference and comparison with follow-up phases.

g. The initial phase should be repeated for each new crew to work onsite, or any time acceptable specified quality standards are not being met.

3.6.3 Follow-up Phase

Daily checks shall be performed to assure control activities, including control testing, are providing continued compliance with contract requirements, until completion of the particular feature of work. The checks shall be made a matter of record in the CQC documentation. Final follow-up checks shall be conducted and all deficiencies corrected prior to the start of additional features of work which may be affected by the deficient work. The Contractor shall not build upon nor conceal non-conforming work.

3.6.4 Additional Preparatory and Initial Phases

Additional preparatory and initial phases shall be conducted on the same definable features of work if: the quality of on-going work is unacceptable; if there are changes in the applicable CQC staff, onsite production supervision or work crew; if work on a definable feature is resumed after a substantial period of inactivity; or if other problems develop.

3.7 TESTS

3.7.1 Testing Procedure

The Contractor shall perform specified or required tests to verify that control measures are adequate to provide a product which conforms to contract requirements. Upon request, the Contractor shall furnish to the Government duplicate samples of test specimens for possible testing by the

Government. Testing includes operation and/or acceptance tests when specified. The Contractor shall procure the services of a Corps of Engineers approved testing laboratory or establish an approved testing laboratory at the project site. The Contractor shall perform the following activities and record and provide the following data:

a. Verify that testing procedures comply with contract requirements.

b. Verify that facilities and testing equipment are available and comply with testing standards.

c. Check test instrument calibration data against certified standards.

d. Verify that recording forms and test identification control number system, including all of the test documentation requirements, have been prepared.

e. Results of all tests taken, both passing and failing tests, shall be recorded on the CQC report for the date taken. Specification paragraph reference, location where tests were taken, and the sequential control number identifying the test shall be given. If approved by the Contracting Officer, actual test reports may be submitted later with a reference to the test number and date taken. An information copy of tests performed by an offsite or commercial test facility shall be provided directly to the Contracting Officer. Failure to submit timely test reports as stated may result in nonpayment for related work performed and disapproval of the test facility for this contract.

3.7.2 Testing Laboratories

3.7.2.1 Capability Check

The Government reserves the right to check laboratory equipment in the proposed laboratory for compliance with the standards set forth in the contract specifications and to check the laboratory technician's testing procedures and techniques. Laboratories utilized for testing soils, concrete, asphalt, and steel shall meet criteria detailed in ASTM D 3740 and ASTM E 329.

3.7.2.2 Capability Recheck

If the selected laboratory fails the capability check, the Contractor will be assessed a charge of $500.00 to reimburse the Government for each succeeding recheck of the laboratory or the checking of a subsequently selected laboratory. Such costs will be deducted from the contract amount due the Contractor.

3.7.3 Onsite Laboratory

The Government reserves the right to utilize the Contractor's control testing laboratory and equipment to make assurance tests, and to check the Contractor's testing procedures, techniques, and test results at no additional cost to the Government.

3.7.4 Furnishing or Transportation of Samples for Testing

Costs incidental to the transportation of samples or materials shall be borne by the Contractor. Samples of materials for test verification and acceptance testing by the Government shall be delivered to a Quality Assurance Laboratory, at an address to be determined.

Coordination for each specific test, exact delivery location, and dates will be made through the Area Office.

3.8 COMPLETION INSPECTION

3.8.1 Punch-Out Inspection

Near the end of the work, or any increment of the work established by a time stated in the Special Clause, "Commencement, Prosecution, and Completion of Work", or by the specifications, the CQC Manager shall conduct an inspection of the work. A punch list of items which do not conform to the approved drawings and specifications shall be prepared and included in the CQC documentation, as required by paragraph DOCUMENTATION. The list of deficiencies shall include the estimated date by which the deficiencies will be corrected. The CQC System Manager or staff shall make a second inspection to ascertain that all deficiencies have been corrected. Once this is accomplished, the Contractor shall notify the Government that the facility is ready for the Government Pre-Final inspection.

3.8.2 Pre-Final Inspection

The Government will perform the pre-final inspection to verify that the facility is complete and ready to be occupied. A Government Pre-Final Punch List may be developed as a result of this inspection. The Contractor's CQC System Manager shall ensure that all items on this list have been corrected before notifying the Government, so that a Final inspection with the customer can be scheduled. Any items noted on the Pre-Final inspection shall be corrected in a timely manner. These inspections and any deficiency corrections required by this paragraph shall be accomplished within the time slated for completion of the entire work or any particular increment of the work if the project is divided into increments by separate completion dates.

3.8.3 Final Acceptance Inspection

The Contractor's Quality Control Inspection personnel, plus the superintendent or other primary management person, and the Contracting Officer's Representative shall be in attendance at the final acceptance inspection. Additional Government personnel including, but not limited to, those from Base/Post Civil Facility Engineer user groups, and major commands may also be in attendance. The final acceptance inspection will be formally scheduled by the Contracting Officer based upon results of the Pre-Final inspection. Notice shall be given to the Contracting Officer at least 14 days prior to the final acceptance inspection and shall include the Contractor's assurance that all specific items previously identified to the Contractor as being unacceptable, along with all remaining work

performed under the contract, will be complete and acceptable by the date scheduled for the final acceptance inspection. Failure of the Contractor to have all contract work acceptably complete for this inspection will be cause for the Contracting Officer to bill the Contractor for the Government's additional inspection cost in accordance with the contract clause titled "Inspection of Construction".

3.9 DOCUMENTATION

The Contractor shall maintain current records providing factual evidence that required quality control activities and/or tests have been performed. These records shall include the work of subcontractors and suppliers and shall be on an acceptable form that includes, as a minimum, the following information:

a. Contractor/subcontractor and their area of responsibility.

b. Operating plant/equipment with hours worked, idle, or down for repair.

c. Work performed each day, giving location, description, and by whom. When Network Analysis (NAS) is used, identify each phase of work performed each day by NAS activity number.

d. Test and/or control activities performed with results and references to specifications/drawings requirements. The control phase shall be identified (Preparatory, Initial, Follow-up). List of deficiencies noted, along with corrective action.

e. Quantity of materials received at the site with statement as to acceptability, storage, and reference to specifications/drawings requirements.

f. Submittals and deliverables reviewed, with contract reference, by whom, and action taken.

g. Offsite surveillance activities, including actions taken.

h. Job safety evaluations stating what was checked, results, and instructions or corrective actions.

i. Instructions given/received and conflicts in plans and/or specifications.

j. Contractor's verification statement.

These records shall indicate a description of trades working on the project; the number of personnel working; weather conditions encountered; and any delays encountered. These records shall cover both conforming and deficient features and shall include a statement that equipment and materials incorporated in the work and workmanship comply with the contract. The original and one copy of these records in report form shall be furnished to the Government daily within 12 hours after the date covered by the report, except that reports need not be submitted for days on which

no work is performed. As a minimum, one report shall be prepared and submitted for every 7 days of no work and on the last day of a no work period. All calendar days shall be accounted for throughout the life of the contract. The first report following a day of no work shall be for that day only. Reports shall be signed and dated by the CQC System Manager. The report from the CQC System Manager shall include copies of test reports and copies of reports prepared by all subordinate quality control personnel.

3.10 SAMPLE FORMS

Sample forms enclosed at the end of this section.

3.11 NOTIFICATION OF NONCOMPLIANCE

The Contracting Officer will notify the Contractor of any detected noncompliance with the foregoing requirements. The Contractor shall take immediate corrective action after receipt of such notice. Such notice, when delivered to the Contractor at the work site, shall be deemed sufficient for the purpose of notification. If the Contractor fails or refuses to comply promptly, the Contracting Officer may issue an order stopping all or part of the work until satisfactory corrective action has been taken. No part of the time lost due to such stop orders shall be made the subject of claim for extension of time or for excess costs or damages by the Contractor.

-- End of Section --

FIGURE 1
SAMPLE SPREADSHEET

SEVEN OAKS DAM, DAM AND APPURTENANCES
SAN BERNARDINO COUNTY, CALIFORNIA

ITEM #	DESCRIPTION	TOTALS AMOUNT	%	FED BE069	%	O.C. NON-FED FW090	%
1.	MOB & DEMOB	$1,000,000.00	94,1797	$941,797.00	5.1044	$51,044.00	0.4092
2.	DIV & CONTROL WA	$2,000,000.00	94,1797	$1,883,594.00	5.1044	$102,088.00	0.4092
3.	CLEAR SITE	$1,000,000.00	94,1797	$941,797.00	5.1044	$51,044.00	0.4092
4.	SCALING	$2,000,000.00	94,1797	$1,883,594.00	5.1044	$102,088.00	0.4092
5.	EXC, FOUND ALLU	$5,000,000.00	94,1797	$4,708,985.00	5.1044	$255,220.00	0.4092
6.	EXC, FOUND ROCK	$5,000,000.00	94,1797	$4,708,985.00	5.1044	$255,220.00	0.4092
					%	NON-FED VW090	%
7.	PROTECT-IN-PLACE	$1,000,000.00			87.6999	$876,999.00	7.0306
8.	RELOCATE NEWPO	$2,000,000.00			87.6999	$1,753,998.00	7.0306

SECTION TABLE OF CONTENTS

DIVISION 01 - GENERAL REQUIREMENTS

SECTION 01702

AS-BUILT DRAWINGS

PART 1 GENERAL

1.1 SUBMITTALS

PART 2 PRODUCTS (NOT APPLICABLE)

PART 3 EXECUTION

3.1 AS-BUILT FIELD DATA
3.1.1 General
3.1.2 Preliminary As-Built Drawings
3.1.2.1 Submittal of the Preliminary As-Built Field Data
3.1.2.2 FINAL AS-BUILT DRAWINGS
3.2 AS-BUILT ELECTRONIC FILE DRAWINGS
3.2.1 General

-- End of Section Table of Contents --

SECTION 01702

AS-BUILT DRAWINGS

PART 1 GENERAL

1.1 SUBMITTALS

Government approval is required for submittals with a "G" designation; submittals not having a "G" designation are for information only. When used, a designation following the "G" designation identifies the office that will review the submittal for the Government. The "RE" designates that the Resident Office will review the submittal for the Government. Submit the following in accordance with Section 01330, SUBMITTAL PROCEDURES: Due dates shall be as indicated in applicable paragraphs and all submittals shall be completed before final payment will be made.

SD-11 Closeout Submittals

As-built Drawings; G, RE.

Red marked up blueline drawings.

PART 2 PRODUCTS (NOT APPLICABLE)

PART 3 EXECUTION

3.1 AS-BUILT FIELD DATA

3.1.1 General

The Contractor shall prepare and furnish the as-built drawings for the project. The as-built drawings shall be a record of the construction as installed and completed by the Contractor. They shall include all the information shown on the contract set of drawings and a record of all deviations, modifications, or changes from those drawings, however minor, which were incorporated in the work, all additional work not appearing on the contract drawings, and all changes which are made after final inspection of the contract work. In the event the Contractor accomplishes additional work which changes the as-built conditions of the facility after submission of the as-built drawings, the Contractor shall furnish revised and/or additional drawings as required to depict as-built conditions. The requirements for these additional drawings will be the same as for the as-built drawings included in the original submission. The drawings shall show the following information, but not be limited thereto:

(a) The location and description of any utility lines or other installations of any kind or description known to exist within the construction area. The location includes dimensions to permanent features.

(b) The location and dimensions of any changes within the building or structures.

(c) Correct grade or alignment of roads, channels, structures or utilities if any changes were made from contract plans.

(d) Correct elevations if changes were made in site grading.

(e) Changes in details of design or additional information obtained from working drawings specified to be prepared and/or furnished by the Contractor including but not limited to fabrication, erection, installation plans and placing details, pipe sizes, dimensions of equipment foundations, etc.

(f) The topography and grades of all drainage installed or affected as a part of the project construction.

(g) All changes or modifications which result from the final inspection.

(h) Where contract drawings or specifications allow options, only the option actually used in the construction shall be shown on the as-built drawings. The option not used shall be deleted.

3.1.2 Preliminary As-Built Drawings

The Contractor shall maintain four (4) sets of full size, blueline prints marked up in red to show the as-built conditions. The sets of as-built prints shall be kept current and available at the job site at all times. All changes from what is shown on the contract plans, whether it be from changes requested by the Contracting Officer or resulting from additional information which might be uncovered in the course of construction, shall be accurately and neatly recorded as they occur by means of details and notes. The marked-up as-built prints will be jointly inspected for accuracy and completeness by the Contracting Officer and Contractor prior to submission of each monthly pay estimate. Failure to keep the As-Built Field Data current shall be sufficient justification to withhold a retained percentage from the monthly pay estimate. Information to be included on these preliminary drawings shall conform to the requirements as stated above. Any and all as-built modifications shall be reflected on all sheets affected by the modifications.

3.1.2.1 Submittal of the Preliminary As-Built Field Data

One (1) full size set of marked up drawings with the as-built field data shall be submitted to the Contracting Officer for review and approval a minimum of 20 calendar days prior to the date of final inspection. If review of the preliminary as-built drawings reveals errors and/or omissions, the drawings will be returned to the Contractor for corrections. The Contractor shall make all corrections and return the drawings to the Contracting Officer within 10 calendar days of receipt.

3.1.2.2 FINAL AS-BUILT DRAWINGS

The final as-built record drawings shall be completed and returned together with the approved preliminary as-built drawings to the Contracting Officer within 30 calendar days of final acceptance. The Contracting Officer will review all final as-built record drawings for accuracy and conformance to the drafting standards and other requirements contained in DIVISION 1 GENERAL REQUIREMENTS. The drawings shall be returned to the Contractor if corrections are necessary. The Contractor shall make all corrections and shall return the drawings to the Contracting Officer within 5 calendar days of receipt. All project files, whether revised or not, shall be provided to the Contracting Officer.

3.2 AS-BUILT ELECTRONIC FILE DRAWINGS

3.2.1 General

The Construction Contractor is not required to submit the red-lined as-built field data in electronic format. The United States Army Corps of Engineers Architect-Engineering firm will accomplish the electronic format of the As-Built Field Data from the Construction Contractors red-lined marked up blueline as-built field data prints.

-- End of Section --

SECTION TABLE OF CONTENTS

DIVISION 02 - SITE WORK

SECTION 02100

DIVERSION AND CONTROL OF WATER

PART 1 GENERAL

1.1 REQUIREMENT
1.1.1 General
1.1.2 Requirements
1.1.3 Drainage Ditches

PART 2 PRODUCTS (Not Applicable)

PART 3 EXECUTION (Not Applicable)

-- End of Section Table of Contents --

SECTION 02100

DIVERSION AND CONTROL OF WATER

PART 1 GENERAL

1.1 REQUIREMENT

1.1.1 General

All permanent construction shall be carried on in areas free from water. Storm runoff from watersheds can be rapid and, during periods of rain, flash flooding may be expected. The project consists of improvements to a natural drainage course.

Within 10 days after receipt of Notice to Proceed, the Contractor shall submit a control of water plan showing the method that he proposes to use to protect each working area. Damage to all work (including temporary construction), utilities, materials, equipment, and plant shall be repaired to the satisfaction of the Contracting Officer at the Contractor's expense, regardless of the cause of such damage.

1.1.2 Requirements

The Contractor is responsible for control of all runoff entering the construction area. The runoff will include water originating from upstream drainages; and in addition any and all seepage and groundwater originating within the work. The work site may be inundated because of runoff. The Contractor shall be responsible for protection of work site during times of runoff by his own means as described in his Storm Water Pollution Prevention Plan (SWPPP) as required per Section 01200 GENERAL REQUIREMENTS and shall be approved by the Contracting Officer.

1.1.3 Drainage Ditches

The location and depth of any drainage ditch to be constructed under this contract shall be subject to the approval of the Contracting Officer. Special precautions shall be taken to avoid impairing the permanent subgrade. Damaged subgrade shall be replaced in accordance with Section 02300 EARTHWORK by and at the expense of the Contractor.

PART 2 PRODUCTS (Not Applicable)

PART 3 EXECUTION (Not Applicable)

-- End of Section --

SECTION TABLE OF CONTENTS

DIVISION 02 - SITE WORK

SECTION 02230

CLEAR SITE AND REMOVE OBSTRUCTIONS

PART 1 GENERAL

1.1 DEFINITIONS
1.1.1 Clearing
1.1.2 Grubbing
1.2 SUBMITTALS (NOT APPLICABLE)
1.3 ENVIRONMENTAL PROTECTION
1.4 BURNING

PART 2 PRODUCTS (Not Applicable)

PART 3 EXECUTION

3.1 REQUIREMENTS
3.1.1 General
3.1.2 Existing Structures and Obstructions
3.2 CLEARING
3.3 GRUBBING
3.4 Trash and Construction Debris
3.5 Environmental Assessment Requirement
3.6 DISPOSAL OF GRUBBED AND REMOVED MATERIAL

-- End of Section Table of Contents --

SECTION 02230

CLEAR SITE AND REMOVE OBSTRUCTIONS

PART 1 GENERAL

1.1 DEFINITIONS

1.1.1 Clearing

Clearing shall consist of the felling, trimming, and cutting of trees into sections and the satisfactory disposal of the trees and other vegetation designated for removal, including down timber, snags, brush, and rubbish occurring in the areas to be cleared.

1.1.2 Grubbing

Grubbing shall consist of the removal and disposal of stumps, roots larger than 75 mm in diameter, and matted roots from the designated grubbing areas.

1.2 SUBMITTALS (NOT APPLICABLE)

1.3 ENVIRONMENTAL PROTECTION

All work and Contractor operations shall comply with the requirements of Section 01355 ENVIRONMENTAL PROTECTION and Section 02300 EARTHWORK.

1.4 BURNING

The use of burning at the project site for the disposal of refuse and debris will not be permitted.

PART 2 PRODUCTS (Not Applicable)

PART 3 EXECUTION

3.1 REQUIREMENTS

3.1.1 General

Except as otherwise specified, and/or indicated, areas to be cleared will be limited to actual excavation areas, and areas on which fills and/or structures are to be placed. The removal of trees, shrubs, turf, and other vegetation outside of these areas shall be held to a minimum and care shall be exercised not to damage any trees, shrubs, turf, or vegetation which can be left in place.

3.1.2 Existing Structures and Obstructions

The Contractor shall clear and grub areas of fill and excavation, and remove and dispose of existing structures and obstructions necessary for project construction, except for those structures which are identified to be protected in place as shown on the drawings.

3.2 CLEARING

All rubbish, waste dumps, and debris areas shall be cleared. Vegetation including grasses, shrubs and weeds shall be removed by grading the existing ground surface to a depth of 0.15 meters, except such vegetation as may be indicated or directed to be left standing. Vegetation to be left standing shall be protected from damage incident to clearing, grubbing, and construction operations by the erection of barriers or by such other means as the circumstances require. Clearing shall also include the removal and disposal of structures that obtrude, encroach upon, or otherwise obstruct the work.

3.3 GRUBBING

Grubbing shall consist of removing non-salvaged roots larger than 75 mm in diameter, matted roots, and other objectionable vegetable matter in the required fill areas, foundation areas, and all excavation areas. In grubbing roots, 610 mm roots shall be removed to below the depth of the required excavation or existing ground level, whichever is lower. Depressions made by grubbing shall be filled with suitable material and compacted to make the surface conform with the original adjacent surface of the ground.

3.4 Trash and Construction Debris

Surface trash and construction debris may be present at the project site. Surface trash and construction debris shall be removed from within the limits of the right-of-way and temporary construction easements.

3.5 Environmental Assessment Requirement

The Contractor shall notify the Contracting Officer 14 calendar days prior to the start of clearing and grubbing activities in accordance with Section 01200 GENERAL REQUIREMENTS, Paragraph ENVIRONMENTAL ASSESSMENT REQUIREMENT.

3.6 DISPOSAL OF GRUBBED AND REMOVED MATERIAL

Trash, construction debris, and material from grubbing, that is designated as scrap, shall become the property of the Contractor, and shall be removed from the site. Scrap and unsatisfactory soils and materials and unstable soils and materials as described in Section 02300 EARTHWORK, paragraph DISPOSITION AND DISPOSAL OF EXCAVATED MATERIALS, shall become the property of the Contractor, and shall be removed from the site. Disposal shall be in accordance with the requirements of SECTION 01355 ENVIRONMENTAL PROTECTION.

-- End of Section --

SECTION TABLE OF CONTENTS

DIVISION 02 - SITE WORK

SECTION 02300

EARTHWORK

PART 1 GENERAL

1.1 REFERENCES
1.2 SUBMITTALS

PART 2 PRODUCTS (NOT APPLICABLE)

PART 3 EXECUTION

3.1 EXCAVATION, GENERAL
3.1.1 Excavation Plan
3.2 Blasting
3.2.1 General Requirements
3.2.2 Blasting
3.2.3 Overshooting
3.2.4 Pre-excavation Survey
3.2.4.1 Vibration Monitoring
3.2.5 Notifications
3.2.6 Qualifications
3.2.7 Post-Blast Reports
3.2.8 Explosives
3.2.8.1 Safety
3.2.8.2 Storage
3.3 PRESERVATION OF PROPERTY
3.4 EXCAVATION FOR STRUCTURES
3.5 EXCAVATION CHANNEL
3.6 REMOVAL OF UNSATISFACTORY SOILS
3.7 DISPOSITION AND DISPOSAL OF EXCAVATED MATERIALS
3.7.1 Hauled Excavated Material
3.8 OVERCUT
3.9 COMPACTION EQUIPMENT
3.10 GENERAL REQUIREMENTS FOR COMPACTED FILLS AND COMPACTED BACKFILLS
3.10.1 Control
3.10.1.1 Laboratory Control
3.10.1.2 Field Control
3.10.2 Settling of Fills or Backfills with Water
3.10.3 Fill Material
3.10.4 Placement
3.10.5 Moisture Content
3.10.6 Compaction
3.11 COMPACTED FILL, CHANNEL
3.11.1 Invert

3.11.1.1 Preparation for Placing
3.11.1.2 Compaction
3.11.2 Behind Channel Walls
3.11.2.1 Limitations on Equipment
3.11.2.2 Construction Balance
3.11.2.3 Compaction
3.11.2.4 Trimming
3.11.2.5 Backfill Against Plywood at Ends of Pipe and Sewer Stubs
3.11.3 Compacted Fill Over Covered Channel
3.11.3.1 General
3.11.3.2 Material
3.11.3.3 Placement
3.11.3.4 Contractors Option
3.11.3.5 Compaction
3.11.4 Compacted Fill, Roadway
3.11.4.1 Compaction
3.11.4.2 Trimming
3.12 BACKFILL
3.12.1 Structural Backfill
3.12.1.1 Location
3.12.1.2 Material
3.12.1.3 Placing
3.12.1.4 Compaction
3.13 SUBGRADE PREPARATION
3.13.1 Subgrade for Channel
3.14 SOIL STABILIZER

-- End of Section Table of Contents --

SECTION 02300

EARTHWORK

PART 1 GENERAL

1.1 REFERENCES

The publications listed below form a part of this specification to the extent referenced. The publications are referred to in the text by basic designation only.

U.S. ARMY CORPS OF ENGINEERS (USACE)

COE EM 385-1-1	(1996) Safety and Health Requirements Manual

AMERICAN SOCIETY FOR TESTING AND MATERIALS (ASTM)

ASTM C 136	(1996a) Sieve Analysis of Fine and Coarse Aggregates
ASTM D 422	(1963; R 1998) Particle-Size Analysis of Soils
ASTM D 1140	(1997) Amount of Material in Soils Finer than the No. 200 (75-micrometer) Sieve
ASTM D 1556	(1990; R 1996el) Density and Unit Weight of Soil in Place by the Sand-Cone Method
ASTM D 1557	(1991; R 1998) Laboratory Compaction Characteristics of Soil Using Modified Effort (56,000 ft-lbf/cu. ft. (2,700 kN-m/cu. m.))
ASTM D 2167	(1994) Density and Unit Weight of Soil in Place by the Rubber Balloon Method
ASTM D 2487	(1998) Classification of Soils for Engineering Purposes (Unified Soil Classification System)
ASTM D 2922	(1996el) Density of Soil and Soil-Aggregate in Place by Nuclear Methods (Shallow Depth)
ASTM D 2937	(1994) Density of Soil in Place by the Drive-Cylinder Method

ASTM D 3017	(1988; R 1996el) Water Content of Soil and Rock in Place by Nuclear Methods (Shallow Depth)
ASTM D 4318	(1998) Liquid Limit, Plastic Limit, and Plasticity Index of Soils
ASTM D 4914	(1994) Density of Soil and Rock in Place by the Sand Replacement Method in a Test Pit.
ASTM D 5030	(1994) Density of Soil and Rock in Place by the Water Replacement Method in a Test Pit.

1.2 SUBMITTALS

Government approval is required for submittals with a "G" designation; submittals not having a "G" designation are for information only. When used, a designation following the "G" designation identifies the office that will review the submittal for the Government. The following shall be submitted in accordance with Section 01330 SUBMITTAL PROCEDURES:

SD-01 Preconstruction Submittals

Excavation Plan; G, RE.

The Contractor shall submit his excavation plan to the Contracting Officer in conformance with paragraph EXCAVATION PLAN

Haul Route Plan; G, RE.

The Contractor shall submit a haul route plan for removal of required excavated materials and for placing required fill materials.

Field Density Tests; G, RE.

Treating of Compacted Fill Materials; G, RE.

Copies of all laboratory and field test reports shall be submitted to the contracting officer within 24 hours of the completion of the tests.

SD-02 Shop Drawings

Shop Drawings; G, RE.

The contractor shall submit for approval shop drawings showing the proposed method of bracing which he intends to use to protect existing property.

Explosive Storage Locations; G, RE.

The contractor shall submit to the Contracting Officer drawings showing the location, access to and type of construction of the proposed storage magazine for explosives, and cap house.

SD-05 Design Data

Blast Data.

The Contractor shall submit Pre- and Post-Blast Reports which shall contain all of the pertinent data on the location by station, ground surface elevation in the area of the blast; diameter, spacing, depth, over-depth, pattern and inclination of blast holes; the type, strength, amount, distribution and powder factor for the explosives to be used and actually used per hole and per blast; the sequence and pattern of delays, and description and purpose of special methods.

PART 2 PRODUCTS (NOT APPLICABLE)

PART 3 EXECUTION

3.1 EXCAVATION, GENERAL

Excavation shall consist of the removal of every type of material encountered in the designated areas or from areas directed. The material to be removed may include but is not limited to hardpan, silt, sand, gravel, cobbles and boulders, cemented silt/sand/gravel/cobbles/boulders with various degrees of cementation, caliche, asphalt, vegetation, trash, and other debris. Slope lines indicated on the drawings for temporary cuts do not necessarily represent the actual slopes to which the excavation must be made to safely perform the work. Unforeseen conditions may dictate that the temporary cut slope shall be made to the actual slope to which the work can be safely performed. Measurement and payment for excavation will be made in accordance with Section 01270A. Excavation for permanent cuts shall be made to the slope lines indicated. Excavation will likely require ripping or other rock-excavation techniques, which may include blasting, and shall be performed in a manner which will not impair the subgrade. Use of heavy tractors equipped with a ripper tooth, hoe-rams, and hydraulic or pneumatic rock breaker could be necessary to excavate highly cemented soils. Rock or cemented material from required excavation to be used in compacted fills and backfills shall be crushed or otherwise reduced in size to meet gradation requirements prior to placement or stockpiling. Except as otherwise specified, the finish surface of subgrades shall be smooth and shall not vary more than 25 mm from indicated grade, except at areas to receive concrete where finished surfaces of subgrade shall not vary more than 12.5 mm from indicated grade. Excess excavated materials shall be hauled and stockpiled in the disposal site per the lines and grades shown on the drawings. Excess excavated materials including rocks and cemented soils shall be processed/crashed or otherwise reduced in sizes not exceeding 75 mm, prior to hauling and placing in the primary disposal site. Prior to commencing excavation, the Contractor shall submit his Excavation Plan to the Contracting Officer. All subgrade excavations will be inspected by the Contracting Officer prior to placement of any fill materials.

3.1.1 Excavation Plan

Prior to commencing excavation, the Contractor shall submit his plan for excavation to the Contracting Officer for acceptance. The plan must show

all proposed locations of excavation operations utilizing methods involving blasting, headache balling, hoe ramming, or other techniques as may be applicable. In addition, the plan must include the results of a pre-excavation survey, a detailed blasting plan (if applicable) performed by a certified blasting consultant, and a seismic monitoring plan. The excavation plan shall be updated and resubmitted to the Contracting Officer any time the Contractor proposes altering his methods. The Contractor's methods for excavation are solely his responsibility. Approval of the excavation plan by the Contracting Officer will in no way limit the Contractor's liability regarding property damaged by this operations, nor will it alter the Contractor's sole responsibility for the safety of his operations. The Contractor shall be responsible for all damage caused by his excavation operations and be responsible for answering all complaints. The Contractor shall provide the Contracting Officer with 30 days advance warning of the use of excavation techniques which may lead to property damage to allow for review of the proposed techniques, to confirm general compliance with these specifications, and to allow monitoring of the excavations methods.

3.2 Blasting

Any method used to excavate the structure or channel using explosives shall be subject to the approval by the Contracting Officer.

3.2.1 General Requirements

The drilling and blasting program and methods shall be the minimum necessary to break up the rock and/or caliche/cemented alluvium into bulldozer-manageable sized pieces for removal. Only the minimum strength explosive that will accomplish the fracturing will be allowed. If multiple charges are deemed necessary, they will be sequenced to produce good breakage of the rock or caliche/cemented alluvium and reduce airblast (sonic impacts) and ground vibrations to minimal levels. In the design of the blasting pattern, no blastholes will be permitted within 60 meters of an active tortoise or Gila Monster burrow. A qualified desert tortoise ecologist is required to be present during all blasting operations to ensure that there are no occupied burrows and/or to remove tortoises or Gila Monsters from the surface or burrows within the 60 meter limit. The desert tortoise ecologist will provide a short report with field notes to the Contracting Officer. The desert tortoise ecologist will be provided by the Contractor as his own expense. Additional restrictions may be imposed during the hibernation period (15 November through 15 March) to protect hibernating tortoises, if necessary and directed by the Contracting Officer. The Contractor shall strictly comply with all State and local regulations regarding construction blasting (e.g., Uniform Standard Specifications for Public Works Construction Off-Site Improvements, Clark County Area, Nevada, Third Edition, subsections 107.10, 203.03.03, and 208.03.01, and Engineer Manual (EM) 1110-2-3800, including all notice and reporting requirements). Under no circumstances shall blasting be performed within 30 meters of concrete that has been placed less than seven days. Blasting within 30 meters of concrete older than seven days will be permitted only if approved by the Contracting Officer.

3.2.2 Blasting

Prior to drilling for each blast, unless waived by the Contracting Officer, the Contractor shall submit a Pre-Blast plan on an approved form, which includes the pertinent data on the location by station, ground surface elevation in the area of the blast; diameter, spacing, depth, overdepth, pattern and inclination of blast holes; the type, strength, amount, distribution and powder factor for the explosives used per hole and per blast; the sequence and pattern of delays, and description and purpose of special methods. The loading of holes shall be done in the presence of a Government inspector. Acceptance by the Contracting Officer of the Pre-Blast plan will not relieve the Contractor of his sole responsibility to produce satisfactory results as set forth in these specifications. Drilling and blasting shall be done only to the depth, amount, and at such locations, with explosives of such quantity, distribution and density that will not produce unsafe or damaged rock and/or caliche/cemented alluvium surfaces or damage beyond the prescribed excavation limits. When a drilling and blasting program results in damage to the excavation, or to natural or man-made features, or is injurious to wildlife and habitat, the Contractor will be required to devise and employ methods which will prevent such damage. The revision may include special methods such as presplit and zone blasting, shallow lifts, reduction in size of individual blasts, small diameter blast holes, closely spaced blast holes, reduction of explosives, greater distribution of explosives by use of decking and primacord or variation in density of explosives.

3.2.3 Overshooting

The Contractor shall use controlled blasting techniques so as not to overshoot. All possible care shall be exercised in drilling and blasting operations to prevent formation of discontinuities and to minimize over-break and blast damage of adjacent unexcavated ground and structures. Any material outside the authorized limits which may be shattered or loosened because of blasting shall be removed and/or re-compacted by the Contractor at his expense. Shattered or loosened material below the bottom limits of the required excavation shall be uniformly distributed and compacted or otherwise disposed of in a manner satisfactory to the Contracting Officer. The Contractor shall discontinue any method of blasting which leads to overshooting or is dangerous to the public, destructive of natural or man-made features, or is injurious to wildlife and habitat.

3.2.4 Pre-excavation Survey

The Contractor shall perform a pre-excavation survey which shall include as a minimum; detailed examination of adjacent structures, including video taping and installation of crack monitoring tape along existing structural cracks. Also included shall be a seismic survey performed by a certified seismic survey firm to determine limiting charge weights, distances to structures, ect. for all areas where blasting is proposed and limiting ball weights, height of drop, etc., for all areas where headache balls and/or hoe ram techniques are proposed.

3.2.4.1 Vibration Monitoring

During construction, the Contractor shall hire a certified seismic survey firm to perform a seismic monitoring program to determine the effects of any blasting, headache ball or hoe ram use, or any other specialized excavation technique. Particle velocities measured at an existing structure or 300 meters, which ever is closest, shall not exceed statutory limits or per second (whether the result of blasting or other excavation technique). In addition to these requirements, the Contractor shall provide suitable vibration monitoring equipment to measure and record ground motions at the 60 meter distance.

3.2.5 Notifications

The Contractor shall notify each property owner and public utility company having structures or facilities in proximity to the site of the work of his intention to use explosives. Such notice shall be given sufficiently in advance to enable the companies to take such steps as they may deem necessary to protect their property from injury. Any blasting adjacent to or crossing existing utilities shall be fully coordinated with the owner of the effected utility to include hole spacing, loading and vibration.

3.2.6 Qualifications

During blasting operations, the Contractor shall have on site, and in immediate charge of the blasting, a licensed blaster acceptable to the Contracting Officer who has had no less than 3 years of experience in controlled blasting and rock excavation operations. Powder handlers shall have had no less than one year continuous experience in preparation and loading of powder charges.

3.2.7 Post-Blast Reports

In addition to the reporting requirements required above, a separate Post-Blast Report of each blast shall be prepared and furnished to the Contracting Officer on an approved form. The report shall indicate the location of the blast by specific stationing, ground surface elevation, depth of round, pounds of explosives used by type and grade, total number of loaded holes, total pounds per delay, quantity and kind of explosive in each hole, maximum measured blast vibration, and all other blast information directed by the Contracting Officer. Original or legible copies of the report shall be provided to the Contracting Officer within 24 hours of the blast event.

3.2.8 Explosives

3.2.8.1 Safety

The contractor shall fully comply with Section 29, Blasting, COE EM 385-1-1 and any Local or State Laws and Regulations applicable to the proposed Blasting Plan.

3.2.8.2 Storage

The Contractor shall submit to the Contracting Officer, for approval, drawings showing the location, access to and type of construction of the

proposed storage magazine for explosives, and cap house. The explosives storage magazine and other facilities may be located on project lands if a satisfactory location can be found and is approved by the Contracting Officer. The Contractor shall maintain the explosive storage area at his own expense. The explosives storage magazine shall be securely locked when not in use.

3.3 PRESERVATION OF PROPERTY

All excavation operations shall be conducted in such a manner that concrete structures, embankments, utilities, or other facilities and improvements which are to remain in place permanently will not be subjected to settlement or horizontal movement. The Contractor shall furnish and install sheet piling, cribbing, bulkheads, shores, or whatever means may be necessary to adequately support material carrying such improvements or to support the improvements themselves and shall maintain such means in position until they are no longer needed. Temporary sheet piling, cribbing, bulkheads, shores or other protective means shall remain the property of the Contractor and when no longer needed shall be removed from the site. The Contractor shall submit for approval shop drawings showing proposed method of bracing which he intends to use. All shoring and bracing shall be designed so that it is effective to the bottom of the excavation, and shall be based upon calculation of pressures exerted by (and the condition and nature of) the materials to be retained, including surcharge imparted to the side of the trench by equipment and stored materials. Removal of shoring shall be performed in such manner as not to disturb or damage the finished concrete or other facility.

3.4 EXCAVATION FOR STRUCTURES

Excavation within the vicinity of existing structures, utilities, roads, and drainage pipes to remain in place shall be performed in a manner to prevent damage to the structure. Earth banks and facilities to remain in place shall be supported as necessary during excavation. Potential for damage resulting from severe vibration may limit the Contractor's operations or choice of equipment. In general, unless otherwise shown or specified, the actual side slopes shall be in accordance with COE EM 385-1-1.

3.5 EXCAVATION CHANNEL

Channel excavation consists of the removal of all materials within the lines and grades indicated.

3.6 REMOVAL OF UNSATISFACTORY SOILS

The removal of soils or materials which are unsatisfactory for the foundation of the channel, or structures may be required in certain areas. Unsatisfactory soils or materials include but are not limited to those materials containing roots and other organic matter, trash, debris and materials classified in ASTM D 2487, as Pt, OH, OL, CH, MH, and materials too wet to support construction equipment. Channel subgrade materials that cannot be brought to 95% compaction after scarification, shall be removed. The Contractor will be required to excavate any such areas to the depth directed and backfill the removal areas with compacted fill conforming to

the requirements of Paragraph GENERAL REQUIREMENTS FOR COMPACTED FILLS AND COMPACTED BACKFILLS.

3.7 DISPOSITION AND DISPOSAL OF EXCAVATED MATERIALS

Excavated materials suitable for required fills shall be placed in temporary stockpiles or used directly in the work. Excess excavated satisfactory natural ground and surface material and soils not utilized as part of the construction shall be hauled and stockpiled in the designated disposal site. Materials and soils to be placed in the designated disposal site shall be free from trash, dumped debris and demolition products, and shall consist of no materials and soils suspected of having characteristics of hazardous and/or toxic waste materials characterized as unsatisfactory soil and material including trash, dumped debris and demolition products. Materials and soils suspected of having characteristics of hazardous and/or toxic waste materials characterized as unsatisfactory soil including trash, dumped debris and demolition products and unstable soils shall become the property of the Contractor and shall be removed from the project site in accordance with requirements Section 01355 ENVIRONMENTAL PROTECTION and Section 01200 GENERAL REQUIREMENTS. No excavated material or waste of any kind shall be removed beyond the project limits under this contract without the express written authority of the Contracting Officer. Prior to placing material, the approved stockpile area(s) and designated disposal site shall be cleared of trash and vegetation. Vegetation shall be removed by grading the existing ground surface to a depth of 150 mm. Any stockpiles shall be placed in a manner to preclude ponding of water. The designated disposal site shall be graded and filled as per plan(s). Natural ground and surface soils and materials thus excavated and removed will then be designated as either:

i. Materials to be salvaged, or
ii. Scrap and unsatisfactory materials and soils and unstable materials and soils to be treated as specified above and in Section 02230 CLEAR SITE AND REMOVE OBSTRUCTIONS.

3.7.1 Hauled Excavated Material

The Contractor shall have a routing plan for haul within the project limits, including removal of required excavated materials and placing fill materials. The haul route plan shall be submitted to the Contracting Officer for approval. Haul routes for transport of the excess excavated material shown on the drawing sheets are approximate. The Contractor will be responsible for obtaining all permits and licenses necessary to haul material off-site. The Contractor will provide to the Contracting Officer three copies of the proposed street haul route plan for transport of all excess excavated material.

3.8 OVERCUT

Except as otherwise specified or specifically ordered in writing, any overcut or excavation beyond the lines and grades indicated in the plans (or as directed) shall be backfilled with compacted fill conforming to the Paragraph GENERAL REQUIREMENTS FOR COMPACTED FILLS AND COMPACTED BACKFILLS, or concrete conforming to the Section 03301 CAST-IN-PLACE STRUCTURAL

CONCRETE FOR CIVIL WORKS. The Contractor shall expect to overbuild and trim back the compacted fill required to backfill overcuts made at trapezoidal channel sections. All excavating, backfilling, compacting of backfill, and concreting occasioned thereby shall be by the Contractor at no additional cost to the Government. Any overcut under existing or newly constructed channels and structures shall be backfilled with concrete.

3.9 COMPACTION EQUIPMENT

Compaction shall be accomplished by tamping roller, rubber tired roller vibratory compactor or mechanical tampers. All equipment, tools, and machines shall be maintained in satisfactory working condition at all times. Compaction equipment shall be suitable for consistently producing uniform soil densities.

3.10 GENERAL REQUIREMENTS FOR COMPACTED FILLS AND COMPACTED BACKFILLS

3.10.1 Control

Moisture-density relations shall be established by the Contractor. The soil used for each maximum density test shall be classified in accordance with ASTM D 2487 and shall include a particle size analysis in accordance with ASTM D 422. At least one five point maximum density test shall be made for every 10 field density tests. Field density test shall be performed by the Contractor at the frequency established in paragraph Field Control, and in such locations to insure that the specified density is being obtained. Moisture-density relations and field densities shall be reported on approved forms. One copy of density data less dry weight determinations shall be provided on the day each test is taken. The completed test reports shall be provided with the Contractor Quality Control Report on the work day following the test.

3.10.1.1 Laboratory Control

Moisture-density relations shall be established by the Contractor. One moisture-density relation shall be made for each classification, blend or change in classification of soil materials encountered. Approval of moisture-density relations shall be obtained prior to the compacting of any material in the work. The moisture-density relations shall be determined in a laboratory in accordance with ASTM D 1557.

a. The desired amount of mixing water will be added for each compaction test specimen, mixed well, and the mixture will be placed in a container with an airtight cover and allowed to cure for 24 hours. A shorter curing time may be allowed where tests show that shortening the curing time will not affect the results.

3.10.1.2 Field Control

Field in-place density shall be determined in accordance with ASTM D 1556. The field moisture content shall be determined in accordance with ASTM D 2216. Determination of in-place densities using the nuclear method ASTM D 2922 may be used to supplement the sand cone density tests ASTM D 1556. When ASTM D 2922 is used, the calibration curves shall be checked and

adjusted using only the sand cone method as described in ASTM D 1556. When material contain considerable amount of rock or coarse gravel in-place density test method ASTM D 4914 or ASTM D 5030 shall be used. At least one adjacent sand cone test shall be performed for every five nuclear density tests performed. If field density tests determined by the nuclear method vary by more than 0.1 kilonewtons per cubic meter from comparison sand-cone tests, and are consistently high or low, adjustment of the calibration curve is necessary.

a. In-Place Densities

One test per 750 cubic meters, for the first 7,500 cubic meters of material and one test for each 1,500 cubic meters thereafter, or fraction thereof, shall be made of each lift of fill or backfill areas compacted by other than hand-operated machines. At least one test shall be made in each 600 mm layer of compacted fill or backfill processed as a unit and not less than one test shall be made in each area. One test per 300 cubic meters, or fraction thereof, shall be made of each lift of fill or backfill areas compacted by hand-operated machines. The contractor CQC shall maintain a log of all tests, which will, updated and submitted to the contracting officer on a weekly basis. The test log shall include: Test number (if retest shall include retest number), date, feature of work, station and offset, weight of wet soil, weight of dry soil, percent of compaction, optimum moisture content, maximum dry unit weight, soil classification, in-place density test methods either sand-cone or nuclear densimeter.

3.10.2 Settling of Fills or Backfills with Water

Settling of fills or backfills with water will not be permitted.

3.10.3 Fill Material

Fill material shall be obtained from the required excavation. Materials considered unsatisfactory for use as compacted fill include but are not limited to those materials containing roots and other organic matter, trash, debris, chunks or clumps of cemented material, and shall contain no stone whose greatest dimension is more than 3/4 the lift thickness. The Contractor shall expect to break-down, crush or otherwise process required excavation for use as fill material due to the cementation of in-situ soils. Materials classified in ASTM D 2487 as MH, CH, Pt, OH, and OL are also considered unsatisfactory for use as compacted fill. Material for compacted fill behind concrete structures shall contain less than 30 percent by weight passing the 75 mm sieve and shall contain no particle larger than 75 mm.

3.10.4 Placement

Fill material shall not be placed against concrete which has not been in place at least 14 days or until the concrete has attained a strength of 17.2 megapascals when tested in accordance with the Section 03301 CAST-IN-PLACE STRUCTURAL CONCRETE FOR CIVIL WORKS. Fill shall not be placed over covered channels (roof decks) until the concrete has obtained

70% of the contract required design strength. Heavy equipment shall not be operated over pipes and buried structures until at least 600 mm of fill material have been placed and compacted over them. Material from the top of the pipe or buried structure to 600 mm above pipe or buried structure shall be compacted by mechanical tampers or other equipment approved by the Contracting Officer. Compacted fill shall be placed with suitable equipment in horizontal layers which before compaction, shall not exceed 300 mm in depth for rubber-tired or vibratory rollers, 200 mm in depth for tamping rollers, 100 mmin depth when mechanical tampers are used. The Contractor may vary the layer thickness within these limits for most efficient operations. Material containing stones shall be placed in a manner to prevent the stones from striking the concrete structures and to prevent the formation of voids.

3.10.5 Moisture Content

Material shall have a uniform moisture content while being placed and compacted. Water shall be added at the source, if required, or by sprinkling each layer of material during placement. Uniform distribution of moisture shall be obtained by disking, harrowing, or otherwise manipulating the soil during and after time water is added. Material containing an excess of moisture shall be manipulated with suitable implements to facilitate maximum aeration and shall be permitted to dry to the proper consistency before being compacted. Fill shall have a maximum moisture content of not more than 2 percent above optimum and a minimum moisture content of not less than 2 percent below optimum.

3.10.6 Compaction

No layer of fill shall be compacted before the practicable uniform moisture content has been obtained. Scarified areas shall be compacted as specified for the fill placed thereon. Rollers will not be permitted to operate within 300 mm of channel or structure walls or over buried structures until the compacted fill over the top of the structures has reached a depth of 600 mm. Compaction equipment shall be so operated that structures are not damaged nor overstressed during compaction operations. Mechanical tampers shall be used for compaction of fill material adjacent to structures where rolling equipment is impracticable for use in compaction.

3.11 COMPACTED FILL, CHANNEL

3.11.1 Invert

3.11.1.1 Preparation for Placing

The foundation for the compacted fill to be placed and compacted fill at the channel shall be cleared of all existing obstructions, vegetation and debris. Any trash or debris shall be removed in accordance with Section 02230 CLEAR SITE AND REMOVE OBSTRUCTIONS. Unsatisfactory or unstable (too wet) material and soils not meeting the requirements for fill material shall be removed where directed. The existing surfaces for the compacted fill at the channel site shall be scarified to a depth of 150 mm and proofrolled by four passes of the compaction equipment. The subgrade for the channel shall be prepared in accordance with paragraph SUBGRADE

PREPARATION.

3.11.1.2 Compaction

Each layer of the material shall be compacted to not less than 95 percent of maximum density, per ASTM D 1557.

3.11.2 Behind Channel Walls

3.11.2.1 Limitations on Equipment

The gross weight of any piece of equipment, or the combined weight of any combinations of equipment coupled together, used to place, moisten and/or compact fill behind channel walls and up to 600 mm above the top of covered sections shall not exceed 16,000 kilograms, including dynamic forces produced by vibratory equipment. Equipment used to compact the fill behind the channel walls shall be of such size as to be capable of operating in the area between the cut slope and the channel wall. Compaction equipment will not be required to operate at elevations lower than 600 mm above the top of wall footings. This equipment shall be of such size as to be capable of operating in the area between the cut slope and the channel wall at any point 600 mm above the top of the heel of wall footings.

3.11.2.2 Construction Balance

Fills behind wall on one side of the channel shall not exceed by more than 1.5 meters the high of the fill behind the opposite channel wall at any time during construction.

3.11.2.3 Compaction

Each layer of fill behind channel walls, shall be compacted to not less than 90 percent of maximum density, per ASTM D 1557. The top 300 mm of the maintenance road fill adjacent to the channel wall shall be compacted to not less than 95 percent of maximum density per ASTM D 1557.

3.11.2.4 Trimming

The top of fill adjacent to channel walls shall be trimmed to the lines indicated on the drawings with a tolerance of plus or minus 25 mm. Any material loosened by trimming shall be recompacted and the area moistened and compacted with one pass of a smooth-wheeled roller. Tolerances shall apply after rolling. Fill slopes shall be trimmed to a uniform alignment at the top of the berm and reasonably uniform slope at or outside the lines shown on the drawings.

3.11.2.5 Backfill Against Plywood at Ends of Pipe and Sewer Stubs

Plywood shall be braced or otherwise held flush against the end of the pipe during backfilling. The Contractor shall make sure the plywood is of sufficient size to adequately cover the pipe or sewer stub opening. The Contractor shall attach blocks or shims to roughly fit the inside diameter of the pipe to assure that the plywood is not displaced during backfilling.

3.11.3 Compacted Fill Over Covered Channel

3.11.3.1 General

No fill material shall be placed over the top of the covered channel until all voids at the sides of the covered channel have been filled as described below, and until all caved material has been compacted to the specified density to the top of the roof slab.

3.11.3.2 Material

Materials for filling voids shall be clean sand, free of trash, organic materials, debris, and with 100 percent passing the 4.75 mm sieve and not more than 10 percent passing the 150 mm sieve.

3.11.3.3 Placement

The first layer of fill over the concrete box section shall be 300 mm in thickness and shall be compacted with a rubber-tired or vibratory roller having a maximum weight if 9,000 kilograms. The remainder of the fill shall be deposited in 150 mm layers and compacted with rubber-tired or vibratory rollers, or other approved equipment with a maximum weight of 9,000 kilograms until the structure has a cover of at least 600 mm. The remainder of the compacted fill shall be placed as specified in paragraph COMPACTED FILL, CHANNEL of this section.

3.11.3.4 Contractors Option

If the Contractor elects to leave the inside forms and shoring in place, permission will be granted to place fill material 48 hours after concrete has been placed.

3.11.3.5 Compaction

Each layer of fill on top of the covered channel shall be compacted to not less than 95 percent of maximum density, per ASTM D 1557. Compacted Fill under streets and maintenance roads shall be compacted per paragraph COMPACTED FILL, ROADWAY.

3.11.4 Compacted Fill, Roadway

3.11.4.1 Compaction

Fill shall be compacted to not less than 95 percent of maximum density per ASTM D 1557 for the width of all traveled ways plus 1 meter on each side thereof.

3.11.4.2 Trimming

All street and maintenance road shoulders and side slopes shall be trimmed to the lines indicated on the drawings with a tolerance of plus or minus 25 millimeters. Any material loosened by trimming shall be recompacted and the area moistened and compacted with one pass of a smooth-wheeled roller. Tolerances shall apply after rolling. Fill slopes shall be trimmed to a

reasonably uniform slope at or outside the lines shown on the drawings.

3.12 BACKFILL

3.12.1 Structural Backfill

3.12.1.1 Location

Backfill shall consist of all fill against and/or around structures.

3.12.1.2 Material

Backfill material shall be obtained from the required excavation as approved by the Contracting Officer. In general, the best material available will be designated as backfill and fill about structures. Backfill may consist of sand, gravelly sand, and silty sands. Organic material, silt, clay, broken concrete or pavement, boulders and other unsatisfactory material shall not be used. Backfill for structures shall not contain any stones larger than 75 mm.

3.12.1.3 Placing

Backfill material shall not be placed against concrete which has not been in place at least 14 days or until the concrete has attained a strength of 17.2 megapascals when tested in accordance with Section 03301 CAST-IN-PLACE STRUCTURAL CONCRETE FOR CIVIL WORKS.

3.12.1.4 Compaction

Compaction shall be not less than 95 percent of maximum density, per ASTM D 1557 unless noted or shown otherwise.

3.13 SUBGRADE PREPARATION

3.13.1 Subgrade for Channel

Subgrade preparation for channel shall include subgrade preparation for areas to receive concrete, aggregate base course and/or bituminous paving for streets, access roads, maintenance roads, turnarounds, and invert access ramps. All trash and debris shall be removed in accordance with Section 02330 CLEAR SITE AND REMOVE OBSTRUCTIONS. After the channel has been excavated to rough grade, the entire channel invert, invert access ramp, and other area indicated above shall be scarified to a depth of 0.15 meters, moisture conditioned and proofrolled by 4 passes of the compaction equipment and trimmed to a uniform grade and smoothed with a steel-wheeled roller to make the subgrade ready to receive concrete. If the subgrade is disturbed by the Contractor's operations or is overexcavated, or is soft or yielding, the subgrade shall be restored to grade and compacted to a density of 95 percent of maximum density, per ASTM D 1557. The finished surface of the subgrade shall not be more than 13 mm above the indicated grade at any point when tested with a 3 meters straightedge.

3.14 SOIL STABILIZER

Soil stabilizer shall be placed on all exposed excavation and fill surfaces after construction is completed. The soil stabilizer shall be a mixture of plaster and natural fiber mulch. The cellulose fiber mulch shall be produced from grinding clean whole wood chips, or fiber produced from ground newsprint with a labeled ash content not to exceed 7 percent. The plaster shall consist of naturally occurring high purity processed gypsum and aditives. The gypsum shall be produced from a mined or quarried source. The gypsum shall be processed to be composed of crushed dry calcium sulfate hemihydrate having a purity of not less than 88 percent. The soil stabilizer shall be mixed with color pigments to match existing soil color on site. Color can be matched using the "Davis Colors" chart by Soil-Tech, Las, Vegas, Nevada, or equal. The gypsum and additives shall be furnished either in bags or bulk and be accompanied by bills of lading and shipping invoices. The shipping invoices for the gypsum shall state the gypsum's purity content, dry weight, and source of manufacture. Processed gypsum that has become partially air set, lumpy, or caked shall not be used. The plaster/cellulose fiber mulch shall be applied at a rate of 6.75 tonnes of plaster mixed with 2.242 tonnes of fiber per hectare. The plaster/cellulose fiber mulch stabilizer shall formulate a protective crust like barrier within 4 to 8 hours after application. Application of the plaster/cellulose fiber mulch stabilizer will not be permitted when weather conditions are unsuitable for concrete placement in accordance with Section 03301 CAST-IN-PLACE STRUCTURAL CONCRETE FOR CIVIL WORKS.

-- End of Section --

SECTION TABLE OF CONTENTS

DIVISION 02 - SITE WORK

SECTION 02316

EXCAVATION, TRENCHING, AND BACKFILLING FOR UTILITIES SYSTEMS

PART 1 GENERAL

1.1 REFERENCES
1.2 DEGREE OF COMPACTION
1.3 SUBMITTALS

PART 2 PRODUCTS

2.1 MATERIALS
2.1.1 Satisfactory Materials
2.1.2 Unsatisfactory Materials
2.1.3 Cohesionless and Cohesive Materials
2.1.4 Unstable Material
2.1.5 Select Granular Material
2.1.6 Initial Backfill Material

PART 3 EXECUTION

3.1 EXCAVATION
3.1.1 Trench Excavation Requirements
3.1.1.1 Bottom Preparation
3.1.1.2 Removal of Unyielding Material
3.1.1.3 Removal of Unstable Material
3.1.1.4 Excavation for Appurtenances
3.1.2 Stockpiles
3.2 BACKFILLING AND COMPACTION
3.2.1 Trench Backfill
3.2.1.1 Replacement of Unyielding Material
3.2.1.2 Replacement of Unstable Material
3.2.1.3 Bedding and Initial Backfill
3.2.1.4 Final Backfill
3.2.2 Backfill for Appurtenances
3.3 TESTING
3.3.1 Testing Facilities
3.3.2 Testing of Backfill Materials
3.3.3 Field Density Tests

-- End of Section Table of Contents --

SECTION 02316

EXCAVATION, TRENCHING, AND BACKFILLING FOR UTILITIES SYSTEMS

PART 1 GENERAL

1.1 REFERENCES

The publications listed below form a part of this specification to the extent referenced. The publications are referred to in the text by basic designation only.

AMERICAN SOCIETY FOR TESTING AND MATERIALS (ASTM)

ASTM D 1556	(2000) Density and Unit Weight of Soil in Place by the Sand-Cone Method
ASTM D 1557	(2000) Laboratory Compaction Characteristics of Soil Using Modified Effort (56,000 ft-lbf/cu. ft. (2,700 kN-m/cu.m.))
ASTM D 2487	(2000) Classification of Soils for Engineering Purposes (Unified Soil Classification System)
ASTM D 2922	(1996el) Density of Soil and Soil-Aggregate in Place by Nuclear Methods (Shallow Depth)
ASTM D 3017	(1988; R1996el) Water Content of Soil and Rock in Place by Nuclear Methods (Shallow Depth)

1.2 DEGREE OF COMPACTION

Degree of compaction shall be expressed as a percentage of the maximum density obtained by the test procedure presented in ASTM D 1557.

1.3 SUBMITTALS

Government approval is required for submittals with a "G" designation; submittals not having a "G" designation are for information only. When used, a designation following the "G" designation identifies the office that will review the submittal for the Government. The "RE" designates that the Resident Office will review the submittal for the Government. Submit the following in accordance with Section 01330, SUBMITTAL PROCEDURES:

SD-06 Test Reports

Field Density Tests; G, RE.

Testing of Backfill Materials; G, RE.

Copies of all laboratory and field test reports within 24 hours of the completion of the test.

PART 2 PRODUCTS

2.1 MATERIALS

2.1.1 Satisfactory Materials

Satisfactory materials shall comprise any materials classified by ASTM D 2487 as GW, GP, GM, GP-GM, GW-GM, GC, GP-GC, GM-GC, SW, SP.

2.1.2 Unsatisfactory Materials

Materials which do not comply with the requirements for satisfactory materials are unsatisfactory. Unsatisfactory materials also include man-made fills, trash, refuse, or backfills from previous construction. Unsatisfactory material also includes material classified as satisfactory which contains root and other organic matter, frozen material, and stones larger than 75 mm,. The Contracting Officer shall be notified of any contaminated materials.

2.1.3 Cohesionless and Cohesive Materials

Cohesionless materials shall include materials classified in ASTM D 2487 as GW, GP, SW, and SP. Cohesive materials shall include materials classified as GC, SC, ML, CL, MH, and CH. Materials classified as GM and SM shall be identified as cohesionless only when the fines are nonplastic.

2.1.4 Unstable Material

Unstable material shall consist of materials too wet to properly support the utility pipe, conduit, or appurtenant structure.

2.1.5 Select Granular Material

Select granular material shall consist of well-graded sand, gravel, crushed gravel, crushed stone or crushed slag composed of hard, tough and durable particles, and shall contain not more than 10 percent by weight of material passing a 0.075 mm mesh sieve and no less than 95 percent by weight passing the 25 mm sieve. The maximum allowable aggregate size shall be 25 mm, or the maximum size recommended by the pipe manufacturer, whichever is smaller.

2.1.6 Initial Backfill Material

Initial backfill shall consist of select granular material or satisfactory materials free from rocks 25 mm, or larger in any dimension or free from rocks of such size as recommended by the pipe manufacturer, whichever is smaller.

PART 3 EXECUTION

3.1 EXCAVATION

Excavation shall be performed to the lines and grades indicated. During excavation, material satisfactory for backfilling shall be stockpiled in an orderly manner at a distance from the banks of the trench equal to 1/2 the depth of the excavation, but in no instance closer than 600 mm. Excavated material not required or not satisfactory for backfill shall be removed from the site. Grading shall be done as may be necessary to prevent surface water from flowing into the excavation, and any water accumulating shall be removed to maintain the stability of the bottom and sides of the excavation. Unauthorized overexcavation shall be backfilled in accordance with paragraph BACKFILLING AND COMPACTION at no additional cost to the Government.

3.1.1 Trench Excavation Requirements

The trench shall be excavated as recommended by the manufacturer of the pipe to be installed. Trench walls below the top of the pipe shall be sloped, or made vertical, and of such width as recommended in the manufacturer's installation manual. Where no manufacturer's installation manual is available, trench walls shall be made vertical. Trench walls more than 1.5 meters high shall be shored, cut back to a stable slope, or provided with equivalent means of protection for employees who may be exposed to moving ground or cave in. Trench walls which are cut back shall be excavated to at least the angle of repose of the soil. Special attention shall be given to slopes which may be adversely affected by weather or moisture content. The trench width below the top of pipe shall not exceed 600 mm plus pipe outside diameter (O.D.) for pipes of less than 600 mm inside diameter and shall not exceed 900 mm plus pipe outside diameter for sizes larger than 600 mm inside diameter. Where recommended trench widths are exceeded, redesign, stronger pipe, or special installation procedures shall be utilized by the Contractor. The cost of redesign, stronger pipe, or special installation procedures shall be borne by the Contractor without any additional cost to the Government.

3.1.1.1 Bottom Preparation

The bottoms of trenches shall be accurately graded to provide uniform bearing and support for the bottom quadrant of each section of the pipe. Bell holes shall be excavated to the necessary size at each joint or coupling to eliminate point bearing. Stones of 25 mm or greater in any dimension, or as recommended by the pipe manufacturer, whichever is smaller, shall be removed to avoid point bearing.

3.1.1.2 Removal of Unyielding Material

Where overdepth is not indicated and unyielding material is encountered in the bottom of the trench, such material shall be removed 100 mm below the required grade and replaced with suitable materials as provided in paragraph BACKFILLING AND COMPACTION.

3.1.1.3 Removal of Unstable Material

Where unstable material is encountered in the bottom of the trench, such material shall be removed to the depth directed and replaced to the proper grade with select granular material as provided in paragraph BACKFILLING AND COMPACTION. When removal of unstable material is required due to the Contractor's fault or neglect in performing the work, the resulting material shall be excavated and replaced by the Contractor without additional cost to the Government.

3.1.1.4 Excavation for Appurtenances

Excavation for manholes, catch-basins, inlets, or similar structures shall be of sufficient size to permit the placement and removal of forms for the full length and width of structure footings and foundations as shown. Rock shall be cleaned of loose debris and cut to a firm surface either level, stepped, or serrated, as shown or as directed. Loose disintegrated rock and thin strata shall be removed. Removal of unstable material shall be as specified above. When concrete is to be placed in an excavated area, special care shall be taken not to disturb the bottom of the excavation. Excavation to the final grade level shall not be made until just before the concrete is to be placed.

3.1.2 Stockpiles

Stockpiles of satisfactory materials shall be placed and graded as specified. Stockpiles shall be kept in a neat and well drained condition, giving due consideration to drainage at all times. The ground surface at stockpile locations shall be cleared, grubbed, and sealed by rubber-tired equipment, excavated satisfactory and unsatisfactory materials shall be separately stockpiled. Stockpiles of satisfactory materials shall be protected from contamination which may destroy the quality and fitness of the stockpiled material. If the Contractor fails to protect the stockpiles, and any material becomes unsatisfactory, such material shall be removed and replaced with satisfactory material from approved sources at no additional cost to the Government. Locations of stockpiles of satisfactory materials shall be subject to prior approval of the Contracting Officer.

3.2 BACKFILLING AND COMPACTION

Backfill material shall consist of satisfactory material, select granular material, or initial backfill material as required. Backfill shall be placed in layers not exceeding 150 mm loose thickness for compaction by hand operated machine compactors, and 200 mm loose thickness for other than hand operated machines, unless otherwise specified. Each layer shall be compacted to at least 95 percent maximum density.

3.2.1 Trench Backfill

Trenches shall be backfilled to existing grade.

3.2.1.1 Replacement of Unyielding Material

Unyielding material removed from the bottom of the trench shall be replaced with select granular material or initial backfill material.

3.2.1.2 Replacement of Unstable Material

Unstable material removed from the bottom of the trench or excavation shall be replaced with select granular material placed in layers not exceeding 150 mm loose thickness.

3.2.1.3 Bedding and Initial Backfill

Bedding shall be of the type and thickness shown. Initial backfill material shall be placed and compacted with approved tampers to a height of at least one foot above the utility pipe or conduit. The backfill shall be brought up evenly on both sides of the pipe for the full length of the pipe. Care shall be taken to ensure thorough compaction of the fill under the haunches of the pipe.

3.2.1.4 Final Backfill

The remainder of the trench, except for special materials for roadways, shall be filled with satisfactory material. Backfill material shall be placed and compacted to 95 percent maximum density. Water flooding or jetting methods of compaction will not be permitted.

3.2.2 Backfill for Appurtenances

After the manhole, catchbasin, inlet, or similar structure has been constructed and the concrete has been allowed to cure for 7 days, backfill shall be placed in such a manner that the structure will not be damaged by the shock of falling earth. The backfill material shall be deposited and compacted as specified for final backfill, and shall be brought up evenly on all sides of the structure to prevent eccentric loading and excessive stress.

3.3 TESTING

Testing shall be the responsibility of the Contractor and shall be performed at no additional cost to the Government.

3.3.1 Testing Facilities

Tests shall be performed by an approved commercial testing laboratory or may be tested by facilities furnished by the Contractor. No work requiring testing will be permitted until the facilities have been inspected and approved by the Contracting Officer.

3.3.2 Testing of Backfill Materials

Classification of backfill materials shall be determined in accordance with ASTM D 2487 and the moisture-density relations of soils shall be determined in accordance with ASTM D 1557. A minimum of one soil classification and one moisture-density relation test shall be performed on each different type of material used for bedding and backfill.

3.3.3 Field Density Tests

Tests shall be performed in sufficient numbers to ensure that the specified density is being obtained. A minimum of one field density test per lift of backfill for every 50 meters of installation shall be performed. One moisture density relationship shall be determined for every 1,500 cubic meters of material used. Field in-place density shall be determined in accordance with ASTM D 1556 or ASTM D 2922. When ASTM D 2922 is used, the calibration curves shall be checked and adjusted using the sand cone method as described in paragraph Calibration of the ASTM publication. ASTM D 2922 results in a wet unit weight of soil and when using this method, ASTM D 3017 shall be used to determine the moisture content of the soil. The calibration curves furnished with the moisture gauges shall be checked along with density calibration checks as described in ASTM D 3017. The calibration checks of both the density and moisture gauges shall be made at the beginning of a job, on each different type of material encountered, at intervals as directed by the Contracting Officer. Copies of calibration curves, results of calibration tests, and field and laboratory density tests shall be furnished to the Contracting Officer. Trenches improperly compacted shall be reopened to the depth directed, then refilled and compacted to the density specified at no additional cost to the Government.

-- End of Section --

SECTION TABLE OF CONTENTS

DIVISION 02 - SITE WORK

SECTION 02510

WATER DISTRIBUTION SYSTEM

PART 1 GENERAL

1.1 REFERENCES
1.2 PIPING
1.2.1 Distribution Lines 75 mm (3 Inches) or Larger
1.2.2 Potable Water Lines
1.2.3 Excavation, Trenching, and Backfilling
1.3 SUBMITTALS
1.4 HANDLING

PART 2 PRODUCTS

2.1 PIPE
2.1.1 Ductile-Iron Pipe
2.2 FITTINGS AND SPECIALS
2.2.1 Ductile-Iron Pipe System
2.3 JOINTS
2.3.1 Ductile-Iron Pipe Jointing
2.4 VALVES
2.4.1 Gate Valves
2.4.2 Vacuum and Air Relief Valves
2.5 VALVE BOXES
2.6 MISCELLANEOUS ITEMS
2.6.1 Disinfection

PART 3 EXECUTION

3.1 INSTALLATION
3.1.1 Cutting of Pipe
3.1.2 Joint Deflection
3.1.2.1 Allowable for Ductile-Iron Pipe
3.1.3 Placing and Laying
3.1.3.1 Piping Connections
3.1.4 Jointing
3.1.4.1 Ductile-Iron Pipe Requirements
3.1.5 Setting of Valves and Valve Boxes
3.1.5.1 Location of Valves
3.1.6 Thrust Restraint
3.1.6.1 Thrust Blocks
3.1.6.2 Restrained Joints
3.2 HYDROSTATIC TESTS
3.2.1 Pressure Test
3.2.2 Leakage Test

3.2.3 Time for Making Test
3.2.4 Concurrent Hydrostatic Tests
3.3 DISINFECTION
3.3.1 Bacteriological Disinfection
3.4 CLEANUP

-- End of Section Table of Contents --

SECTION 02510

WATER DISTRIBUTION SYSTEM

PART 1 GENERAL

1.1 REFERENCES

The publications listed below form a part of this specification to the extent referenced. The publications are referred to in the text by basic designation only.

AMERICAN WATER WORKS ASSOCIATION (AWWA)

AWWA B300	(1999) Hypochlorites
AWWA B301	(1992; Addenda B301a - 1999) Liquid Chlorine
AWWA C104	(1995) Cement-Mortar Lining for Ductile-Iron Pipe and Fittings for Water
AWWA C105	(1993) Polyethylene Encasement for Ductile-Iron Pipe Systems
AWWA C110	(1998) Ductile-Iron and Gray-Iron Fittings, 3 In. Through 48 In. (75 mm through 1200 mm), for Water and Other Liquids
AWWA C111	(1995) Rubber-Gasket Joints for Ductile-Iron Pressure Pipe and Fittings
AWWA C115	(1999) Flanged Ductile-Iron Pipe With Ductile-Iron or Gray-Iron Threaded Flanges
AWWA C151	(1996) Ductile-Iron Pipe, Centrifugally Cast, for Water or Other Liquids
AWWA C153	(1994; Errata Nov 1996) Ductile-Iron Compact Fittings, 3 In. Through 24 In. (76 mm through 610 mm) and 54 In. through 64 In. (1,400 mm through 1,600 mm) for Water Service
AWWA C500	(1993; C500a) Metal-Sealed Gate Valves for Water Supply Service
AWWA C600	(1999) Installation of Ductile-Iron Water Mains and Their Appurtenances

AWWA C651	(1992) Disinfecting Water Mains

DUCTILE IRON PIPE RESEARCH ASSOCIATION (DIPRA)

DIPRA-Restraint Design	(1997) Thrust Restraint Design for Ductile Iron Pipe

MANUFACTURERS STANDARDIZATION SOCIETY OF THE VALVE AND FITTINGS INDUSTRY (MSS)

MSS SP-80	(1997) Bronze Gate, Globe, Angle and Check Valves

NSF INTERNATIONAL (NSF)

NSF 61	(1999) Drinking Water System Components - Health Effects (Sections 1-9)

1.2 PIPING

This section covers water distribution lines. All work shall conform to the Las Vegas Valley Water District Standard Plates, Drawings, Specifications and the "Uniform Design and Construction Standards for Water Distribution Systems," UDACS, latest edition. The Contractor shall have a copy of the manufacturer's recommendations for each material or procedure to be utilized available at the construction site at all times.

1.2.1 Distribution Lines 75 mm (3 Inches) or Larger

Piping for water distribution lines shall be ductile iron.

1.2.2 Potable Water Lines

Piping and components of potable water systems which come in contact with the potable water shall conform to NSF 61.

1.2.3 Excavation, Trenching, and Backfilling

Excavation, trenching, and backfilling shall be in accordance with the applicable provisions of Section 02316 EXCAVATION, TRENCHING, AND BACKFILLING FOR UTILITIES SYSTEMS, except as modified herein.

1.3 SUBMITTALS

Government approval is required for submittals with a "G" designation; submittals not having a "G" designation are for information only. When used, a designation following the "G" designation identifies the office that will review the submittal for the Government. The "RE" designates that the Resident Office will review the submittal for the Government. Submit the following in accordance with Section 01330, SUBMITTAL PROCEDURES:

SD-06 Test Reports

Bacteriological Disinfection.

Test results from commercial laboratory verifying disinfection.

SD-07 Certificates

Waste Water Disposal Method; G, RE.

The method proposed for disposal of waste water from hydrostatic tests and disinfection, prior to performing hydrostatic tests.

Installation.

A statement signed by the manufacturer's field representative certifying that the Contractor's personnel are capable of properly installing the pipe on the project.

SD-08 Manufacturer's Instructions

Installation; G, RE.

The manufacturer's recommendations for each material or procedure to be utilized.

SD-11 Closeout Submittals

Satisfactory Installation.

A statement signed by the principal officer of the contracting firm stating that the installation is satisfactory and in accordance with the contract drawings and specifications, and the manufacturer's prescribed procedures and techniques, upon completion of the project and before final acceptance.

1.4 HANDLING

Pipe and accessories shall be handled to ensure delivery to the trench in sound, undamaged condition, including no injury to the pipe coating or lining. If the coating or lining of any pipe or fitting is damaged, the repair shall be made by the Contractor in a satisfactory manner, at no additional cost to the Government. Pipe shall be carried into position and not dragged. Use of pinch bars and tongs for aligning or turning pipe will be permitted only on the bare ends of the pipe. The interior of pipe and accessories shall be thoroughly cleaned of foreign matter before being lowered into the trench and shall be kept clean during laying operations by plugging or other approved method. Before installation, the pipe shall be inspected for defects. Material found to be defective before or after laying shall be replaced with sound material without additional expense to the Government. Rubber gaskets that are not to be installed immediately shall be stored in a cool and dark place.

PART 2 PRODUCTS

2.1 PIPE

Pipe shall conform to the respective specifications and other requirements specified below.

2.1.1 Ductile-Iron Pipe

Ductile-iron pipe shall conform to AWWA C151, working pressure not less than 1.03 MPa (150 psi), unless otherwise shown or specified. Pipe shall be cement-mortar lined in accordance with AWWA C104. Linings shall be standard. When installed underground, pipe shall be encased with 0.15 mm thick polyethylene in accordance with AWWA C105. Flanged ductile iron pipe with threaded flanges shall be in accordance with AWWA C115.

2.2 FITTINGS AND SPECIALS

2.2.1 Ductile-Iron Pipe System

Fittings and specials shall be suitable for 1.03 MPa (150 psi) pressure rating, unless otherwise specified. Fittings and specials for mechanical joint pipe shall conform to AWWA C110. Fittings and specials for use with push-on joint pipe shall conform to AWWA C110 and AWWA C111. Fittings and specials shall be cement-mortar lined (standard thickness) in accordance with AWWA C104. Ductile iron compact fittings shall conform to AWWA C153.

2.3 JOINTS

2.3.1 Ductile-Iron Pipe Jointing

a. Mechanical joints shall be of the stuffing box type and shall conform to AWWA C111.

b. Push-on joints shall conform to AWWA C111.

c. Rubber gaskets and lubricants shall conform to the applicable requirements of AWWA C111.

2.4 VALVES

2.4.1 Gate Valves

Gate valves shall be designed for a working pressure of not less than 1.03 MPa (150 psi). Valve connections shall be as required for the piping in which they are installed. Valves shall have a clear waterway equal to the full nominal diameter of the valve, and shall be opened by turning counterclockwise. The operating nut or wheel shall have an arrow, cast in the metal, indicating the direction of opening.

a. Valves smaller than 75 mm (3 inches) shall be all bronze and shall conform to MSS SP-80, Type 1, Class 150.

b. Valves 75 mm (3 inches) and larger shall be iron body, bronze mounted, and shall conform to AWWA C500. Flanges shall not be buried. An approved pit shall be provided for all flanged connections.

2.4.2 Vacuum and Air Relief Valves

Vacuum and air relief valves shall be of the size shown and shall be of a type that will release air and prevent the formation of a vacuum. The valves shall automatically release air when the lines are being filled with water and shall admit air into the line when water is being withdrawn in excess of the inflow. Valves shall be iron body with bronze trim and stainless steel float.

2.5 VALVE BOXES

Valve boxes shall be cast iron. Cast-iron boxes shall be extension type with slide-type adjustment and with flared base. The minimum thickness of metal shall be 5 mm. The word "WATER" shall be cast in the cover. The box length shall adapt, without full extension, to the depth of cover required over the pipe at the valve location.

2.6 MISCELLANEOUS ITEMS

2.6.1 Disinfection

Chlorinating materials shall conform to the following:

Chlorine, Liquid: AWWA B301.

Hypochlorite, Calcium and Sodium: AWWA B300.

PART 3 EXECUTION

3.1 INSTALLATION

3.1.1 Cutting of Pipe

Cutting of pipe shall be done in a neat and workmanlike manner without damage to the pipe. Unless otherwise recommended by the manufacturer and authorized by the Contracting Officer, cutting shall be done with an approved type mechanical cutter. Wheel cutter shall be used when practicable. Squeeze type mechanical cutters shall not be used for ductile iron.

3.1.2 Joint Deflection

3.1.2.1 Allowable for Ductile-Iron Pipe

The maximum allowable deflection shall be as given in AWWA C600. If the alignment requires deflection in excess of the above limitations, special bends or a sufficient number of shorter lengths of pipe shall be furnished to provide angular deflections within the limit set forth.

3.1.3 Placing and Laying

Pipe and accessories shall be carefully lowered into the trench by means of derrick, ropes, belt slings, or other authorized equipment. Water-line materials shall not be dropped or dumped into the trench. Abrasion of the pipe coating shall be avoided. Except where necessary in making

connections with other lines or as authorized by the Contracting Officer, pipe shall be laid with the bells facing in the direction of laying. The full length of each section of pipe shall rest solidly upon the pipe bed, with recesses excavated to accommodate bells, couplings, and joints. Pipe that has the grade or joint disturbed after laying shall be taken up and relaid. Pipe shall not be laid in water or when trench conditions are unsuitable for the work. Water shall be kept out of the trench until joints are complete. When work is not in progress, open ends of pipe, fittings, and valves shall be securely closed so that no trench water, earth, or other substance will enter the pipes or fittings. Where any part of the coating or lining is damaged, the repair shall be made by and at the Contractor's expense in a satisfactory manner. Pipe ends left for future connections shall be valved, plugged, or capped, and anchored, as shown.

3.1.3.1 Piping Connections

Where connections are made between new work and existing mains, the connections shall be made by using specials and fittings to suit the actual conditions. When made under pressure, these connections shall be installed using standard methods as approved by the Contracting Officer.

3.1.4 Jointing

3.1.4.1 Ductile-Iron Pipe Requirements

Mechanical and push-on type joints shall be installed in accordance with AWWA C600 for buried lines.

3.1.5 Setting of Valves and Valve Boxes

3.1.5.1 Location of Valves

After delivery, valves, including those in hydrants, shall be drained to prevent freezing and shall have the interiors cleaned of all foreign matter before installation. Valves and valve boxes shall be installed where shown or specified, and shall be set plumb. Valve boxes shall be centered on the valves. Boxes shall be installed over each outside gate valve unless otherwise shown. Where feasible, valves shall be located outside the area of roads and streets. Earth fill shall be tamped around each valve box or pit to a distance of 1.2 m on all sides of the box, or the undisturbed trench face if less than 1.2 m.

3.1.6 Thrust Restraint

Plugs, caps, tees and bends deflecting 11.25 degrees or more, either vertically or horizontally, on waterlines 100 mm (4 inches) in diameter or larger, and fire hydrants shall be provided with thrust restraints. Valves shall be securely anchored or shall be provided with thrust restraints to prevent movement. Thrust restraints shall be either thrust blocks or, for ductile-iron pipes, restrained joints.

3.1.6.1 Thrust Blocks

Thrust blocking shall be concrete of a mix not leaner than: 1 cement,

2-1/2 sand, 5 gravel; and having a compressive strength of not less than 14 MPa after 28 days. Blocking shall be placed between solid ground and the hydrant or fitting to be anchored. Unless otherwise indicated or directed, the base and thrust bearing sides of thrust blocks shall be poured directly against undisturbed earth. The sides of thrust blocks not subject to thrust may be poured against forms. The area of bearing shall be as shown or as directed. Blocking shall be placed so that the fitting joints will be accessible for repair. Steel rods and clamps, protected by galvanizing or by coating with bituminous paint, shall be used to anchor vertical down bends into gravity thrust blocks.

3.1.6.2 Restrained Joints

For ductile-iron pipe, restrained joints shall be designed by the Contractor or the pipe manufacturer in accordance with DIPRA-Restraint Design.

3.2 HYDROSTATIC TESTS

Where any section of a water line is provided with concrete thrust blocking for fittings or hydrants, the hydrostatic tests shall not be made until at least 5 days after installation of the concrete thrust blocking, unless otherwise approved.

3.2.1 Pressure Test

After the pipe is laid, the joints completed, fire hydrants permanently installed, and the trench partially backfilled leaving the joints exposed for examination, the newly laid piping or any valved section of piping shall, unless otherwise specified, be subjected for 1 hour to a hydrostatic pressure test of 1.38 MPa. Water supply lines designated on the drawings shall be subjected for 1 hour to a hydrostatic pressure test of 1.38 MPa. Each valve shall be opened and closed several times during the test. Exposed pipe, joints, fittings, hydrants, and valves shall be carefully examined during the partially open trench test. Joints showing visible leakage shall be replaced or remade as necessary. Cracked or defective pipe, joints, fittings, hydrants and valves discovered in consequence of this pressure test shall be removed and replaced with sound material, and the test shall be repeated until the test results are satisfactory.

The Contractor may request a waiver, setting forth in writing the reasons for the request and stating the alternative procedure proposed to comply with the required hydrostatic tests. Backfill placed prior to the tests shall be placed in accordance with the requirements of Section 02316 EXCAVATION, TRENCHING, AND BACKFILLING FOR UTILITIES SYSTEMS.

3.2.2 Leakage Test

Leakage test shall be conducted after the pressure tests have been satisfactorily completed. The duration of each leakage test shall be at least 2 hours, and during the test the water line shall be subjected to not less than 1.38 MPa pressure. Water supply lines designated on the drawings shall be subjected to a pressure equal to 1.38 MPa. Leakage is defined as the quantity of water to be supplied into the newly laid pipe, or any

valved or approved section, necessary to maintain pressure within 34.5 kPa (5 psi) of the specified leakage test pressure after the pipe has been filled with water and the air expelled. Piping installation will not be accepted if leakage exceeds the allowable leakage which is determined by the following formula:

L = 0.0001351ND(P raised to 0.5 power)

L = Allowable leakage in gallons per hour
N = Number of joints in the length of pipeline tested
D = Nominal diameter of the pipe in inches
P = Average test pressure during the leakage test, in psi gauge

Should any test of pipe disclose leakage greater than that calculated by the above formula, the defective joints shall be located and repaired until the leakage is within the specified allowance, without additional cost to the Government.

3.2.3 Time for Making Test

Except for joint material setting or where concrete thrust blocks necessitate a 5-day delay, pipelines jointed with rubber gaskets, mechanical or push-on joints, or couplings may be subjected to hydrostatic pressure, inspected, and tested for leakage at any time after partial completion of backfill.

3.2.4 Concurrent Hydrostatic Tests

The Contractor may elect to conduct the hydrostatic tests using either or both of the following procedures. Regardless of the sequence of tests employed, the results of pressure tests, leakage tests, and disinfection shall be as specified. Replacement, repair or retesting required shall be accomplished by the Contractor at no additional cost to the Government.

a. Pressure test and leakage test may be conducted concurrently.

b. Hydrostatic tests and disinfection may be conducted concurrently, using the water treated for disinfection to accomplish the hydrostatic tests. If water is lost when treated for disinfection and air is admitted to the unit being tested, or if any repair procedure results in contamination of the unit, disinfection shall be reaccomplished.

3.3 DISINFECTION

3.3.1 Bacteriological Disinfection

Before acceptance of potable water operation, each unit of completed waterline shall be disinfected as specified. After pressure tests have been made, the unit to be disinfected shall be thoroughly flushed with water until all entrained dirt and mud have been removed before introducing the chlorinating material. The chlorinating material shall be either liquid chlorine, calcium hypochlorite, or sodium hypochlorite, conforming to paragraph MISCELLANEOUS ITEMS. The chlorinating material shall provide a dosage of not less than 50 ppm and shall be introduced into the water

lines in an approved manner. Polyvinyl Chloride (PVC) pipe lines shall be chlorinated using only the above specified chlorinating material in solution. The agent shall not be introduced into the line in a dry solid state. The treated water shall be retained in the pipe long enough to destroy all non-spore forming bacteria. Except where a shorter period is approved, the retention time shall be at least 24 hours and shall produce not less than 25 ppm of free chlorine residual throughout the line at the end of the retention period. Valves on the lines being disinfected shall be opened and closed several times during the contact period. The line shall then be flushed with clean water until the residual chlorine is reduced to less than 1.0 ppm. During the flushing period, each fire hydrant on the line shall be opened and closed several times. From several points in the unit, personnel from the Contractor's commercial laboratory shall take at least 3 water samples from different points, approved by the Contracting Officer, in proper sterilized containers and perform a bacterial examination in accordance with state approved methods. The commercial laboratory shall be certified by the state's approving authority for examination of potable water. The disinfection shall be repeated until tests indicate the absence of pollution for at least 2 full days. The unit will not be accepted until satisfactory bacteriological results have been obtained. See also AWWA C651 for further information.

3.4 CLEANUP

Upon completion of the installation of water lines, and appurtenances, all debris and surplus materials resulting from the work shall be removed.

-- End of Section --

SECTION TABLE OF CONTENTS

DIVISION 02 - SITE WORK

SECTION 02531

SANITARY SEWERS

PART 1 GENERAL

1.1 REFERENCES
1.2 GENERAL REQUIREMENTS
1.3 SUBMITTALS

PART 2 PRODUCTS

2.1 PIPE
2.1.1 Plastic Pipe
2.1.1.1 PVC Pipe
2.2 REQUIREMENTS FOR FITTINGS
2.2.1 Fittings for PVC Pipe
2.3 JOINTS
2.3.1 Plastic Pipe Jointing
2.4 BRANCH CONNECTIONS
2.5 FRAMES AND COVERS
2.6 CEMENT MORTAR
2.6.1 Portland Cement
2.6.2 Portland Cement Concrete
2.7 STRUCTURES
2.7.1 Precast Reinforced Concrete Manhole Sections

PART 3 EXECUTION

3.1 INSTALLATION
3.1.1 Adjacent Facilities
3.1.1.1 Water Lines
3.1.2 Pipe Laying
3.1.2.1 Trenches
3.1.2.2 Backfill
3.1.2.3 Width of Trench
3.1.2.4 Jointing
3.1.2.5 Handling and Storage
3.1.3 Leakage Tests
3.1.4 Test for Deflection
3.2 CONCRETE CRADLE AND ENCASEMENT
3.3 INSTALLATION OF WYE BRANCHES
3.4 MANHOLE DETAILS
3.4.1 General Requirements
3.4.2 Jointing, Plastering and Sealing
3.4.3 Setting of Frames and Covers
3.4.4 External Preformed Rubber Joint Seals

3.5 CONNECTING TO EXISTING MANHOLES
3.6 CLEANOUTS AND OTHER APPURTENANCES

-- End of Section Table of Contents --

SECTION 02531

SANITARY SEWERS

PART 1 GENERAL

1.1 REFERENCES

The publications listed below form a part of this specification to the extent referenced. The publications are referred to in the text by basic designation only.

AMERICAN SOCIETY FOR TESTING AND MATERIALS (ASTM)

ASTM C 33	(1999ael) Concrete Aggregates
ASTM C 94/C 94M	(2000) Ready-Mixed Concrete
ASTM C 150	(1999a) Portland Cement
ASTM C 260	(1998) Air-Entraining Admixtures for Concrete
ASTM C 270	(1999b) Mortar for Unit Masonry
ASTM C 478	(1997) Precast Reinforced Concrete Manhole Sections
ASTM C 478M	(1997) Precast Reinforced Concrete Manhole Sections (Metric)
ASTM C 972	(1995) Compression-Recovery of Tape Sealant
ASTM D 412	(1998a) Vulcanized Rubber and Thermoplastic Rubbers and Thermoplastic Elastomers - Tension
ASTM D 624	(1991; R 1998) Tear Strength of Conventional Vulcanized Rubber and Thermoplastic Elastomers
ASTM D 1784	(1999a) Rigid Poly(Vinyl Chloride) (PVC) Compounds and Chlorinated Poly(Vinyl Chloride) (CPVC) Compounds
ASTM D 3034	(1998) Type PSM Poly(Vinyl Chloride) (PVC) Sewer Pipe and Fittings
ASTM D 3212	(1996a) Joints for Drain and Sewer Plastic Pipes Using Flexible Elastomeric Seals

ASTM F 402	(1993; R 1999) Safe Handling of Solvent Cements, Primers, and Cleaners Used for Joining Thermoplastic Pipe and Fittings

NATIONAL FIRE PROTECTION ASSOCIATION (NFPA)

NFPA 49	(1994) Hazardous Chemicals Data
NFPA 325-1	(1994) Fire Hazard Properties of Flammable Liquids, Gases, and Volatile Solids
NFPA 704	(1996) Identification of the Fire Hazards of Materials for Emergency Response

UNI-BELL PVC PIPE ASSOCIATION (UBPPA)

UBPPA UNI-B-6	(1990) Recommended Practice for the Low-Pressure Air Testing of Installed Sewer Pipe

1.2 GENERAL REQUIREMENTS

All construction and materials shall be in accordance with the latest edition of the Design and Construction Standards for Wastewater Collection Systems and the Uniform Standard Specifications for Public Works Construction Off-Site Improvements, Clark County Area, Nevada. The Contractor shall replace damaged material and redo unacceptable work at no additional cost to the Government. Excavation and backfilling is specified in Section 02316 EXCAVATION, TRENCHING, AND BACKFILLING FOR UTILITIES SYSTEMS. Backfilling shall be accomplished after inspection by the Contracting Officer. Before, during, and after installation, plastic pipe and fittings shall be protected from any environment that would result in damage or deterioration to the material. The Contractor shall have a copy of the manufacturer's instructions available at the construction site at all times and shall follow these instructions unless directed otherwise by the Contracting Officer. Solvents, solvent compounds, lubricants, elastomeric gaskets, and any similar materials required to install the plastic pipe shall be stored in accordance with the manufacturer's recommendation and shall be discarded if the storage period exceeds the recommended shelf life.

1.3 SUBMITTALS

Government approval is required for submittals with a "G" designation; submittals not having a "G" designation are for information only. When used, a designation following the "G" designation identifies the office that will review the submittal for the Government. The "RE" designates that the Resident Office will review the submittal for the Government. Submit the following in accordance with Section 01330, SUBMITTAL PROCEDURES:

SD-06 Test Reports

Test Reports.

The Contractor shall submit copies of all test reports for Leakage and Deflection within 24 hours after completion of tests.

PART 2 PRODUCTS

2.1 PIPE

Pipe shall conform to the respective specifications and other requirements specified below.

2.1.1 Plastic Pipe

2.1.1.1 PVC Pipe

ASTM D 3034, Type PSM with a maximum SDR of 35, Size 380 mm (15 inch) or less in diameter. PVC shall be certified by the compounder as meeting the requirements of ASTM D 1784, cell Class 12454B. The pipe stiffness shall be greater than or equal to 735/D for cohesionless material pipe trench backfills.

2.2 REQUIREMENTS FOR FITTINGS

Fittings shall be compatible with the pipe supplied and shall have a strength not less than that of the pipe. Fittings shall conform to the respective specifications and other requirements specified below.

2.2.1 Fittings for PVC Pipe

ASTM D 3034 for type PSM pipe.

2.3 JOINTS

Joints installation shall comply with the manufacturer's instructions. Fittings and gaskets utilized for waste drains or industrial waste lines shall be certified by the manufacturer as oil resistant.

2.3.1 Plastic Pipe Jointing

Flexible plastic pipe (PVC or high density polyethylene pipe) gasketed joints shall conform to ASTM D 3212.

2.4 BRANCH CONNECTIONS

Branch connections shall be made by use of regular fittings or solvent cemented saddles as approved. Saddles for PVC pipe shall conform to Table 4 of ASTM D 3034.

2.5 FRAMES AND COVERS

Frames and covers shall be cast iron, ductile iron or reinforced concrete. Cast iron frames and covers shall be as indicated or shall be of type suitable for the application, circular, without vent holes. The frames and covers shall have a combined weight of not less than 181.4 kg (400 pounds).

Reinforced concrete frames and covers shall be as indicated or shall conform to ASTM C 478 and/or ASTM C 478M. The words "Clark County Sanitation District" shall be stamped or cast into covers so that it is plainly visible.

2.6 CEMENT MORTAR

Cement mortar shall conform to ASTM C 270, Type M with Type II cement.

2.6.1 Portland Cement

Portland cement shall conform to ASTM C 150, Type V for concrete used in concrete pipe, concrete pipe fittings, and manholes and type optional with the Contractor for cement used in concrete cradle, concrete encasement, and thrust blocking. Air-entraining admixture conforming to ASTM C 260 shall be used with Type V cement.

2.6.2 Portland Cement Concrete

Portland cement concrete shall conform to ASTM C 94/C 94M, compressive strength of 28 MPa at 28 days, except for concrete cradle and encasement or concrete blocks for manholes. Concrete used for cradle and encasement shall have a compressive strength of 17 MPa minimum at 28 days. Concrete in place shall be protected from freezing and moisture loss for 7 days.

2.7 STRUCTURES

2.7.1 Precast Reinforced Concrete Manhole Sections

Precast reinforced concrete manhole sections shall conform to ASTM C 478 and/or ASTM C 478M, except that portland cement shall be as specified herein. Joints shall be cement mortar, an approved mastic, rubber gaskets, a combination of these types; or the use of external preformed rubber joint seals and extruded rolls of rubber with mastic adhesive on one side.

PART 3 EXECUTION

3.1 INSTALLATION

3.1.1 Adjacent Facilities

3.1.1.1 Water Lines

Where the location of the sewer is not clearly defined by dimensions on the drawings, the sewer shall not be closer horizontally than 3 m to a water-supply main or service line, except that where the bottom of the water pipe will be at least 300 mm above the top of the sewer pipe, the horizontal spacing may be a minimum of 2 m. Where gravity-flow sewers cross above water lines, the sewer pipe for a distance of 3 m on each side of the crossing shall be fully encased in concrete or shall be acceptable pressure pipe with no joint closer horizontally than 1 m to the crossing. The thickness of the concrete encasement including that at the pipe joints shall be not less than 100 mm.

3.1.2 Pipe Laying

a. Pipe shall be protected during handling against impact shocks and free fall; the pipe interior shall be free of extraneous material.

b. Pipe laying shall proceed upgrade with the spigot ends of bell-and-spigot pipe and tongue ends of tongue-and-groove pipe pointing in the direction of the flow. Each pipe shall be laid accurately to the line and grade shown on the drawings. Pipe shall be laid and centered so that the sewer has a uniform invert. As the work progresses, the interior of the sewer shall be cleared of all superfluous materials.

c. Before making pipe joints, all surfaces of the portions of the pipe to be joined shall be clean and dry. Lubricants, primers, and adhesives shall be used as recommended by the pipe manufacturer. The joints shall then be placed, fitted, joined, and adjusted to obtain the degree of water tightness required.

d. Installations of solvent weld joint pipe, using ABS or PVC pipe and fittings shall be in accordance with ASTM F 402. The Contractor shall ensure adequate trench ventilation and protection for workers installing the pipe.

3.1.2.1 Trenches

Trenches shall be kept free of water and as dry as possible during bedding, laying, and jointing and for as long a period as required. When work is not in progress, open ends of pipe and fittings shall be satisfactorily closed so that no trench water or other material will enter the pipe or fittings.

3.1.2.2 Backfill

As soon as possible after the joint is made, sufficient backfill material shall be placed along the pipe to prevent pipe movement off line or grade. Plastic pipe shall be completely covered to prevent damage from ultraviolet light.

3.1.2.3 Width of Trench

If the maximum width of the trench at the top of the pipe, as specified in Section 02316 EXCAVATION, TRENCHING, AND BACKFILLING FOR UTILITIES SYSTEMS, is exceeded for any reason other than by direction, the Contractor shall install, at no additional cost to the Government, concrete cradling, pipe encasement, or other bedding required to support the added load of the backfill.

3.1.2.4 Jointing

Joints between different pipe materials shall be made as specified, using approved jointing materials.

3.1.2.5 Handling and Storage

Pipe, fittings and joint material shall be handled and stored in accordance with the manufacturer's recommendations. Storage facilities for plastic pipe, fittings, joint materials and solvents shall be classified and marked in accordance with NFPA 704, with classification as indicated in NFPA 49 and NFPA 325-1.

3.1.3 Leakage Tests

Lines shall be tested for leakage by low pressure air testing, infiltration tests or exfiltration tests, as appropriate. Low pressure air testing for PVC pipe shall be as prescribed in UBPPA UNI-B-6. Prior to infiltration or exfiltration tests, the trench shall be backfilled up to at least the lower half of the pipe. If required, sufficient additional backfill shall be placed to prevent pipe movement during testing, leaving the joints uncovered to permit inspection. Visible leaks encountered shall be corrected regardless of leakage test results. When the water table is 600 mm or more above the top of the pipe at the upper end of the pipeline section to be tested, infiltration shall be measured using a suitable weir or other device acceptable to the Contracting Officer. When the Contracting Officer determines that infiltration cannot be properly tested, an exfiltration test shall be made by filling the line to be tested with water so that a head of at least 600 mm is provided above both the water table and the top of the pipe at the upper end of the pipeline to be tested. The filled line shall be allowed to stand until the pipe has reached its maximum absorption, but not less than 4 hours. After absorption, the head shall be re-established. The amount of water required to maintain this water level during a 2-hour test period shall be measured. Leakage as measured by either the infiltration test or exfiltration test shall not exceed 50 mL per 5 mm diameter per 100 m of pipeline per hour. When leakage exceeds the maximum amount specified, satisfactory correction shall be made and retesting accomplished. Testing, correction, and retesting shall be made at no additional cost to the Government.

3.1.4 Test for Deflection

When flexible pipe is used, a deflection test shall be made on the entire length of the installed pipeline not less than 30 days after the completion of all work including the leakage test, backfill, and placement of any fill, grading, paving, concrete, or superimposed loads. Deflection shall be determined by use of a deflection device or by use of a spherical, spheroidal, or elliptical ball, a cylinder, or circular sections fused to a common shaft. The ball, cylinder, or circular sections shall have a diameter, or minor diameter as applicable, of 92.5 percent of the inside diameter of the pipe. A tolerance of plus 0.5 percent will be permitted. The ball, cylinder, or circular sections shall be of a homogeneous material throughout, shall have a density greater than 1.0 as related to water at 4.0 degrees C (39.2 degrees F), and shall have a surface brinell hardness of not less than 150. The device shall be center bored and through bolted with a 6 mm (1/4 inch) minimum diameter steel shaft having a yield strength of 480 MPa (70,000 psi) or more, with eyes at each end for attaching pulling cables. The eye shall be suitably backed with flange or heavy washer; a pull exerted on the opposite end of the shaft shall produce compression throughout the remote end of the ball, cylinder or circular

section. Circular sections shall be spaced so that the distance from the external faces of the front and back sections shall equal or exceed the diameter of the circular section. Failure of the ball, cylinder, or circular section to pass freely through a pipe run, either by being pulled through or by being flushed through with water, shall be cause for rejection of that run. When a deflection device is used for the test in lieu of the ball, cylinder, or circular sections described, such device shall be approved prior to use. The device shall be sensitive to 1.0 percent of the diameter of the pipe being measured and shall be accurate to 1.0 percent of the indicated dimension. Installed pipe showing deflections greater than 7.5 percent of the normal diameter of the pipe, shall be retested by a run from the opposite direction. If the retest also fails, the suspect pipe shall be replaced at no cost to the Government.

3.2 CONCRETE CRADLE AND ENCASEMENT

The pipe shall be supported on a concrete cradle, or encased in concrete where indicated or directed.

3.3 INSTALLATION OF WYE BRANCHES

Wye branches shall be installed where sewer connections are indicated or where directed. Cutting into piping for connections shall not be done except in special approved cases. When the connecting pipe cannot be adequately supported on undisturbed earth or tamped backfill, the pipe shall be encased in concrete backfill or supported on a concrete cradle as directed. Concrete required because of conditions resulting from faulty construction methods or negligence by the Contractor shall be installed at no additional cost to the Government. The installation of wye branches in an existing sewer shall be made by a method which does not damage the integrity of the existing sewer. One acceptable method consists of removing one pipe section, breaking off the upper half of the bell of the next lower section and half of the running bell of wye section. After placing the new section, it shall be rotated so that the broken half of the bell will be at the bottom. The two joints shall then be made with joint packing and cement mortar.

3.4 MANHOLE DETAILS

3.4.1 General Requirements

Manholes shall be constructed of precast concrete manhole sections. The invert channels shall be smooth and semicircular in shape conforming to the inside of the adjacent sewer section. Changes in direction of flow shall be made with a smooth curve of as large a radius as the size of the manhole will permit. Changes in size and grade of the channels shall be made gradually and evenly. The invert channels shall be formed directly in the concrete of the manhole base, or shall be built up with brick and mortar, or shall be half tile laid in concrete, or shall be constructed by laying full section sewer pipe through the manhole and breaking out the top half after the surrounding concrete has hardened. Pipe connections shall be made to manhole using water stops, standard O-ring joints, special manhole coupling, or shall be made in accordance with the manufacturer's recommendation. The Contractor's proposed method of connection, list of

materials selected, and specials required, shall be approved prior to installation. The floor of the manhole outside the channels shall be smooth and shall slope toward the channels not less than 100 mm per meter nor more than 200 mm per meter.

3.4.2 Jointing, Plastering and Sealing

Mortar joints shall be completely filled and shall be smooth and free from surplus mortar on the inside of the manhole. Mortar and mastic joints between precast rings shall be full-bedded in jointing compound and shall be smoothed to a uniform surface on both the interior and exterior of the manhole. Installation of rubber gasket joints between precast rings shall be in accordance with the recommendations of the manufacturer. Precast rings may also be sealed by the use of extruded rolls of rubber with mastic adhesive on one side.

3.4.3 Setting of Frames and Covers

Unless otherwise indicated, tops of frames and covers shall be set flush with finished grade in paved areas or 50 mm higher than finished grade in unpaved areas. Frame and cover assemblies shall be sealed to manhole sections using external preformed rubber joint seals that meet the requirements of ASTM D 412 and ASTM D 624, or other methods specified in paragraph Jointing, Plastering and Sealing, unless otherwise specified.

3.4.4 External Preformed Rubber Joint Seals

External preformed rubber joint seals and extruded rolls of rubber with mastic adhesive shall meet the requirements of ASTM D 412 and ASTM C 972 to ensure conformance with paragraph Leakage Tests. The seal shall be multi-section with neoprene rubber top section and all lower sections made of Ethylene Propylene Di Monomer (EPDM) rubber with a minimum thickness of 1.5 mm. Each unit shall consist of a top and a bottom section and shall have mastic on the bottom of the bottom section and mastic on the top and bottom of the top section. The mastic shall be non-hardening butyl rubber sealant and shall seal to the cone/top slab of the manhole/catch basin and over the lip of the casting. One unit shall seal a casting and up to six, 50 mm adjusting rings. The bottom section shall be 305 mm in height. A 152 mm high top section will cover up to two, 50 mm adjusting rings. A 305 mm high bottom section will cover up to six, 50 mm adjusting rings. Extension sections shall cover up to two more adjusting rings. Each extension shall overlap the bottom section by 50 mm and shall be overlapped by the top section by 50 mm.

3.5 CONNECTING TO EXISTING MANHOLES

Pipe connections to existing manholes shall be made so that finish work will conform as nearly as practicable to the applicable requirements specified for new manholes, including all necessary concrete work, cutting, and shaping. The connection shall be centered on the manhole. Holes for the new pipe shall be of sufficient diameter to allow packing cement mortar around the entire periphery of the pipe but no larger than 1.5 times the diameter of the pipe. Cutting the manhole shall be done in a manner that will cause the least damage to the walls.

3.6 CLEANOUTS AND OTHER APPURTENANCES

Cleanouts and other appurtenances shall be installed where shown on the drawings or as directed by the Contracting Officer, and shall conform to the detail of the drawings.

-- End of Section --

SECTION TABLE OF CONTENTS

DIVISION 02 - SITE WORK

SECTION 02630

STORM-DRAINAGE SYSTEM

PART 1 GENERAL

1.1 REFERENCES
1.2 SUBMITTALS
1.3 DELIVERY, STORAGE, AND HANDLING
1.3.1 Delivery and Storage
1.3.2 Handling

PART 2 PRODUCTS

2.1 PIPE FOR CULVERTS AND STORM DRAINS
2.1.1 Reinforced Concrete Pipe Laterals
2.2 HYDROSTATIC TEST ON WATERTIGHT JOINTS
2.2.1 Concrete

PART 3 EXECUTION

3.1 EXCAVATION FOR PIPE AND DRAINAGE STRUCTURES
3.1.1 Trenching
3.1.2 Removal of Rock
3.1.3 Removal of Unstable Material
3.2 BEDDING
3.3 BACKFILLING
3.3.1 Backfilling Pipe in Trenches
3.3.2 Backfilling Pipe in Fill Sections
3.4 PLACING REINFORCED CONCRETE PIPE
3.5 TESTING REQUIREMENTS (BACKFILLING)
3.6 MOVEMENT OF CONSTRUCTION MACHINERY

-- End of Section Table of Contents --

SECTION 02630

STORM-DRAINAGE SYSTEM

PART 1 GENERAL

1.1 REFERENCES

The publications listed below form a part of this specification to the extent referenced. The publications are referred to in the text by basic designation only.

AMERICAN ASSOCIATION OF STATE HIGHWAY AND TRANSPORTATION OFFICIALS (AASHTO)

AASHTO M 198	(1994) Joints for Circular Concrete Sewer and Culvert Pipe Using Flexible Watertight Gaskets

AMERICAN SOCIETY FOR TESTING AND MATERIALS (ASTM)

ASTM A 48	(1994a) Gray Iron Castings
ASTM C 76M	(1997) Reinforced Concrete Culvert, Storm Drain, and Sewer Pipe (Metric)
ASTM C 443	(1994) Joints for Circular Concrete Sewer and Culvert Pipe, Using Rubber Gaskets
ASTM C 655	(1995a) Reinforced Concrete D-Load Culvert, Storm Drain, and Sewer Pipe
ASTM D 1557	(1991) Laboratory Compaction Characteristics of Soil Using Modified Effort (56,000 ft-lbf/cu. ft. (2,700 kN-m/cu.m.))

1.2 SUBMITTALS

Government approval is required for submittals with a "G" designation; submittals not having a "G" designation are for information only. When used, a designation following the "G" designation identifies the office that will review the submittal for the Government. The "RE" designates that the Resident Office will review the submittal for the Government. Submit the following in accordance with Section 01330, SUBMITTAL PROCEDURES:

SD-07 Certificates

Pipeline Testing; G, RE.

Hydrostatic Test on Watertight Joints; G, RE.

Certified copies of test reports demonstrating conformance to applicable pipe specifications, before pipe is installed.

SD-08 Manufacturer's Instructions

Placing Pipe; G, RE.

Printed copies of the manufacturer's recommendations for installation procedures of the material being placed, prior to installation.

1.3 DELIVERY, STORAGE, AND HANDLING

1.3.1 Delivery and Storage

Materials delivered to site shall be inspected for damage, unloaded, and stored with a minimum of handling. Materials shall not be stored directly on the ground. The inside of pipes and fittings shall be kept free of dirt and debris.

1.3.2 Handling

Materials shall be handled in a manner that ensures delivery to the trench in sound, undamaged condition. Pipe shall be carried to the trench, not dragged.

PART 2 PRODUCTS

2.1 PIPE FOR CULVERTS AND STORM DRAINS

Pipe for culverts and storm drains shall be of the sizes indicated and shall conform to the requirements specified.

2.1.1 Reinforced Concrete Pipe Laterals

ASTM C 76M, Class III, or ASTM C 655 with D-Load of 1,350 pounds per linear foot of pipe diameter to produce a 0.01 inch crack.

2.2 HYDROSTATIC TEST ON WATERTIGHT JOINTS

2.2.1 Concrete

A hydrostatic test shall be made on the watertight joint types as proposed. Only one sample joint of each type needs testing; however, if the sample joint fails because of faulty design or workmanship, an additional sample joint may be tested. During the test period, gaskets or other jointing material shall be protected from extreme temperatures which might adversely affect the performance of such materials. Performance requirements for joints in reinforced and nonreinforced concrete pipe shall conform to AASHTO M 198 or ASTM C 443.

PART 3 EXECUTION

3.1 EXCAVATION FOR PIPE AND DRAINAGE STRUCTURES

Excavation of trenches, and for appurtenances and backfilling for culverts and storm drains, shall be in accordance with the applicable portions of Section 02316 EXCAVATION, TRENCHING, AND BACKFILLING FOR UTILITIES SYSTEMS and the requirements specified below.

3.1.1 Trenching

The width of trenches at any point below the top of the pipe shall be not greater than required to permit satisfactory jointing and thorough tamping of the bedding material under and around the pipe.

3.1.2 Removal of Rock

Rock in either ledge or boulder formation shall be replaced with suitable materials to provide a compacted earth cushion having a thickness between unremoved rock and the pipe of at least 150 mm.

3.1.3 Removal of Unstable Material

Where wet or otherwise unstable soil incapable of properly supporting the pipe, as determined by the Contracting Officer, is unexpectedly encountered in the bottom of a trench, such material shall be removed to the depth required and replaced to the proper grade with select granular material, compacted as provided in paragraph BACKFILLING. When removal of unstable material is due to the fault or neglect of the Contractor in his performance of shoring and sheeting, water removal, or other specified requirements, such removal and replacement shall be performed at no additional cost to the government.

3.2 BEDDING

Bedding for all RCP pipe shall be a Type II aggregate base, meeting the requirements of Section 02241 AGGREGATE BASE COURSE. The bedding gradation shall be in accordance with Section 02241, 2.1.2. The bedding surface for the pipe shall be placed with a thickness of 150 mm below the pipe and extend up to the springline of the pipe.

The bedding shall be brought up evenly on both sies of pipe for the full length of pipe. The bedding shall be thoroughly compacted with mechanical tampers or rammers.

3.3 BACKFILLING

3.3.1 Backfilling Pipe in Trenches

After the pipe has been properly bedded, backfill shall be placed, including selected granular material, or initial backfill material in accordance with Section 02316 EXCAVATION, TRENCHING, AND BACKFILLING FOR UTILITIES SYSTEMS.

3.3.2 Backfilling Pipe in Fill Sections

For pipe placed in fill sections, backfill material shall be uniformly

spread in layers longitudinally on both sides of the pipe, not exceeding 150 mm in compacted depth, and shall be compacted by rolling parallel with pipe or by mechanical tamping or ramming. Prior to commencing normal filling operations, the crown width of the fill at a height of 610 mm above the top of the pipe shall extend a distance of not less than twice the outside pipe diameter on each side of the pipe or 4 m, whichever is less. After the backfill has reached at least 610 mm above the top of the pipe, the remainder of the compacted fill shall be placed and thoroughly compacted in layers not exceeding 300 mm.

3.4 PLACING REINFORCED CONCRETE PIPE

Each pipe section shall be thoroughly examined before being laid; defective or damaged pipe shall not be used. Pipelines shall be laid to the grades and alignment indicated. Proper facilities shall be provided for lowering sections of pipe into trenches. Pipe shall not be laid in water, and pipe shall not be laid when trench conditions or weather are unsuitable for such work. Diversions of drainage or dewatering of trenches during construction shall be provided as necessary.

The Contractor shall determine his source of supply of sand for use in mortar a sufficient time in advance of pipe laying operations to permit sampling and testing before use, and no mortar shall be used until the sand has been approved by the Engineer. Pipe sections shall be checked for alignment and grade at the time of joining the sections. If an adjustment in alignment or grade is necessary after making the joint, additional mortar shall be firmly pressed into the joint.

The interior of the pipe shall be kept free of dirt, excess mortar, and other foreign material as the pipe laying progresses, and left clean at the completion of the work. Any pipe which is not in true alignment or which shows any undue settlement after laying, or is damaged, shall be taken up and relaid at the Contractor's expense. The first section of pipe to be laid shall be firmly placed to the designated line and grade with the groove upstream. Laying shall proceed upgrade with tongue ends of tongue-and-groove pipe pointing in the direction of the flow. Abutting ends of the sections of pipe to be jointed shall than be cleared and wetted, after which joining mortar shall be firmly placed into the lower half of the groove end of the previously laid section. Joining mortar shall be firmly placed on the top half of the tongue end of the section to be jointed which shall then be inserted truly and snugly into the groove end of the section previously laid so as to completely fill the joint. The interior joint shall them be either brushed or pointed and all surplus mortar removed from the pipe. The external space between the ends of the jointed pipe shall be firmly filled from the outside with laying mortar. When pipe with self-centering joints and without and inside pointing recess is furnished, the inside shoulder of the groove end of section shall first be lightly plastered or buttered with joining mortar after which the pipe ends shall be firmly fitted together in such a way that the tongue end of each section fits snugly into the groove end of the preceding section in order to center the joint and form a true flow line. The inside joints shall be troweled or brushed smooth and excess mortar removed from the pipe. The outside joint recesses shall then be filled with mortar, after which backfilling shall be performed as specified. When pipe is furnished

with self-centering joints with both inside and outside pointing recesses, the pipe shall be firmly fitted together in such a way that the tongue end of each section fits snugly into the groove end of each preceding section in order to center the joint and to form a true flow line, after which the inside joint recess shall be firmly filled with pointing mortar and then troweled or brushed smooth and excess mortar removed from the pipe, after which backfilling shall be performed as specified. Backfill of the pipe trench may be completed while the joint mortar is still plastic. Should the joint mortar become set before the backfill is placed, backfilling of the trench shall be commenced within sixteen (16) hours of joining the pipe sections. When the pipe is not backfilled while the mortar is plastic, the mortar shall be cured in accordance with the water, curing compound, form, or waterproof membrane method. Free water shall not be allowed to come in contact with the pipeline until the mortar in the joints has set at least twenty-four (24) hours.

Storm drain stubouts shall be capped and location identified with a marker post as shown on the plans.

3.5 TESTING REQUIREMENTS (BACKFILLING)

All testing requirements shall be in accordance with Section 02316 EXCAVATION, TRENCHING, AND BACKFILLING FOR UTILITIES SYSTEMS.

3.6 MOVEMENT OF CONSTRUCTION MACHINERY

When compacting by rolling or operating heavy equipment parallel with the pipe, displacement of or injury to the pipe shall be avoided. Movement of construction machinery over a storm drain at any stage of construction shall be at the Contractor's risk. Any damaged pipe shall be repaired or replaced.

-- End of Section --

SECTION TABLE OF CONTENTS

DIVISION 02 - SITE WORK

SECTION 02710

SUBDRAINAGE SYSTEMS - WEEPHOLE SYSTEMS

PART 1 GENERAL

1.1 REFERENCES
1.2 SUBMITTALS

PART 2 PRODUCTS

2.1 DRAIN MATERIAL
2.2 FILTER FABRIC

PART 3 EXECUTION

3.1 INSTALLATION
3.1.1 Drain Material
3.1.2 Filter Fabric
3.2 TESTS
3.2.1 Drain Material
3.2.1.1 Points
3.2.1.2 Sampling and Testing

-- End of Section Table of Contents --

SECTION 02710

SUBDRAINAGE SYSTEMS - WEEPHOLE SYSTEMS

PART 1 GENERAL

1.1 REFERENCES

The publications listed below form a part of this specification to the extent referenced. The publications are referred to in the text by basic designation only.

AMERICAN SOCIETY FOR TESTING AND MATERIALS (ASTM)

ASTM C 131	(1996) Resistance to Degradation of Small-Size Coarse Aggregate by Abrasion and Impact in the Los Angeles Machine
ASTM C 136	(1996a) Sieve Analysis of Fine and Coarse Aggregates
ASTM D 75	(1987; R 1997) Sampling Aggregates
ASTM D 4632	(1991; R 1997) Grab Breaking Load and Elongation of Geotextiles
ASTM D 4833	(2000) Index Puncture Resistance of Geotextiles, Geomembranes and Related Products

1.2 SUBMITTALS

Government approval is required for submittals with a "G" designation; submittals not having a "G" designation are for information only. When used, a designation following the "G" designation identifies the office that will review the submittal for the Government. The "RE" designates that the Resident Office will review the submittal for the Government. Submit the following in accordance with Section 01330, "SUBMITTAL PROCEDURES:

SD-04 Samples

Filter Fabric.

Specimens identified to indicate the manufacturer, type of material, size and quantity of material, and shipment or lot represented. Each sample of filter fabric shall be a piece not less than 0.15 m x 0.15 m.

PART 2 PRODUCTS

2.1 DRAIN MATERIAL

Drain material shall be durable, hard, tough, and free from adherent coatings. The material shall not contain corrosive agents, organic matter, or soft, friable, thin or elongated particles in quantities considered deleterious by the Contracting Officer. Drain material shall consist of gravel, crushed stone, or processed crushed concrete, and shall show a loss in weight of not more than 50 percent when tested in accordance with ASTM C 131, and shall be reasonably well graded within the following limits:

Sieve Size (millimeters)	Percent by Weight Passing
63	100
50	95 - 100
37.5	35 - 70
25	0 - 15
12.5	0 - 5

2.2 FILTER FABRIC

Filter fabric shall be a nonwoven needle punch pervious sheet of plastic yarn. The filter fabric shall provide an apparent opening size no finer than the No. 100 sieve and no coarser than the No. 50 sieve. The filter fabric shall have a minimum tensile strength of 700 newtons in any principal direction when tested in accordance with ASTM D 4632 grab test method using 25.4 millimeter square jaws and a 0.3 meter per minute constant rate of traverse. The filter fabric shall have a 15 percent minimum breaking elongation in any principal direction when tested in accordance with ASTM D 4632. The filter fabric shall have a 250 newtons minimum puncture strength when tested in accordance with ASTM D 4833. The filter fabric shall have no seams.

PART 3 EXECUTION

3.1 INSTALLATION

3.1.1 Drain Material

Drain material shall be placed as shown on the drawings.

3.1.2 Filter Fabric

Filter fabric shall be installed per manufacturer's recommendations. The Contractor shall use all means necessary to protect the fabric before, during and after installation. Many fabrics are subject to degradation from ultra-violet rays. Materials which, in the judgment of the Contracting Officer, are not being handled in accordance with the manufacturer's recommendation shall be rejected. Rejected materials shall be removed from the job site. Filter fabric shall be applied on a prepared surface as shown on the plans. End and longitudinal joint overlapping widths shall be a minimum of 610 millimeters.

3.2 TESTS

3.2.1 Drain Material

3.2.1.1 Points

Points on the individual grading curves obtained from representative samples of the drain material, not only shall lie between the boundary limits as defined by smooth curves drawn through the tabulated grading limits plotted on a mechanical-analysis diagram, but also shall exhibit no abrupt changes in slope denoting skip grading, scalping of certain sizes, or other irregularities which would be detrimental to the proper functioning of the drain and filter

3.2.1.2 Sampling and Testing

Sampling and testing of the drain material shall be performed by the Contractor to determine compliance of the installed materials with specified requirements in conformance with ASTM C 131, ASTM C 136, and ASTM D 75. Sampling and testing of the filter materials shall be performed by the Contractor to determine compliance of the installed materials with specified requirements in conformance with ASTM C 136. Sampling and testing shall be performed at regular intervals with at least three tests being made for the drain materials. The location of after placement tests shall be as directed.

-- End of Section --

SECTION TABLE OF CONTENTS

DIVISION 02 - SITE WORK

SECTION 02722

AGGREGATE AND/OR GRADED-CRUSHED AGGREGATE BASE COURSE

PART 1 GENERAL

1.1 REFERENCES
1.2 DEFINITIONS
1.2.1 Aggregate Base Course
1.2.2 Degree of Compaction
1.3 SUBMITTALS
1.4 SAMPLING AND TESTING
1.4.1 Sampling
1.4.2 Tests
1.4.2.1 Sieve Analysis
1.4.2.2 Liquid Limit and Plasticity Index
1.4.2.3 Moisture-Density Determinations
1.4.2.4 Field Density Tests
1.4.2.5 Wear Test
1.4.3 Testing Frequency
1.4.3.1 Initial Tests
1.4.3.2 In Place Tests
1.4.4 Approval of Material
1.5 WEATHER LIMITATIONS
1.6 PLANT, EQUIPMENT, AND TOOLS

PART 2 PRODUCTS

2.1 AGGREGATES
2.1.1 Coarse Aggregate
2.1.1.1 Aggregate Base Course
2.1.2 Fine Aggregate
2.1.3 Gradation Requirements
2.1.4 Liquid Limit and Plasticity Index

PART 3 EXECUTION

3.1 GENERAL REQUIREMENTS
3.2 OPERATION OF AGGREGATE SOURCES
3.3 STOCKPILING MATERIAL
3.4 PREPARATION OF UNDERLYING COURSE
3.5 INSTALLATION
3.5.1 Mixing the Materials
3.5.2 Placing
3.5.3 Grade Control
3.5.4 Edges of Base Course
3.5.5 Compaction

3.5.6 Thickness
3.5.7 Finishing
3.5.8 Smoothness
3.6 TRAFFIC
3.7 MAINTENANCE
3.8 DISPOSAL OF UNSATISFACTORY MATERIALS

-- End of Section Table of Contents --

SECTION 02722

AGGREGATE AND/OR GRADED-CRUSHED AGGREGATE BASE COURSE

PART 1 GENERAL

1.1 REFERENCES

The publications listed below form a part of this specification to the extent referenced. The publications are referred to in the text by basic designation only.

AMERICAN SOCIETY FOR TESTING AND MATERIALS (ASTM)

ASTM C 117	(1995) Materials Finer Than 75 micrometer (No. 200) Sieve in Mineral Aggregates by Washing
ASTM C 127	(1988; R 1993el) Specific Gravity and Absorption of Course Aggregate
ASTM C 128	(1997) Specific Gravity and Absorption of Fine Aggregate
ASTM C 131	(1996) Resistance to Degradation of Small-Size Coarse Aggregate by Abrasion and Impact in the Los Angeles Machine
ASTM C 136	(1996a) Sieve Analysis of Fine and Coarse Aggregates
ASTM D 75	(1987; R 1997) Sampling Aggregates
ASTM D 422	(1963; R 1998) Particle-Size Analysis of Soils
ASTM D 1556	(2000) Density and Unit Weight of Soil in Place by the Sand-Cone Method
ASTM D 1557	(2000) Laboratory Compaction Characteristics of Soil Using Modified Effort (56,000 ft-lbf/cu. ft. (2,700 kN-m/cu.m.))
ASTM D 2487	(2000) Classification of Soils for Engineering Purposes (Unified Soil Classification System)
ASTM D 2922	(1996el) Density of Soil and Soil-Aggregate in Place by Nuclear Methods (Shallow Depth)

ASTM D 3017	(1988; R 1996el) Water Content of Soil and Rock in Place by Nuclear Methods (Shallow Depth)
ASTM D 4318	(2000) Liquid Limit, Plastic Limit, and Plasticity Index of Soils
ASTM E 11	(1995) Wire-Cloth Sieves for Testing Purposes

1.2 DEFINITIONS

For the purposes of this specification, the following definitions apply.

1.2.1 Aggregate Base Course

Aggregate base course (ABC) is well graded, durable aggregate uniformly moistened and mechanically stabilized by compaction.

1.2.2 Degree of Compaction

Degree of compaction shall be expressed as a percentage of the maximum density obtained by the test procedure presented in ASTM D 1557.

1.3 SUBMITTALS

Government approval is required for submittals with a "G" designation; submittals not having a "G" designation are for information only. When used, a designation following the "G" designation identifies the office that will review the submittal for the Government. The "RE" designates that the Resident Office will review the submittal for the Government. The following shall be submitted in accordance with Section 01330 SUBMITTAL PROCEDURES:

SD-03 Product Data

Plant, Equipment, and Tools.

List of proposed equipment to be used in performance of construction work, including descriptive data.

Waybills and Delivery Tickets; G, RE.

Copies of waybills and delivery tickets during the progress of the work. Before the final statement is allowed, the Contractor shall file certified waybills and certified delivery tickets for all aggregates actually used.

SD-06 Test Reports

Sampling and testing; G, RE.

Field Density Tests; G, RE.

Calibration curves and related test results prior to using the device or equipment being calibrated. Copies of field test results within 24 hours after the tests are performed. Certified copies of test results for approval not less than 30 days before material is required for the work.

1.4 SAMPLING AND TESTING

Sampling and testing shall be the responsibility of the Contractor. Sampling and testing shall be performed by a testing laboratory approved in accordance with Section 01451 CONTRACTOR QUALITY CONTROL. Work requiring testing will not be permitted until the testing laboratory has been inspected and approved. The materials shall be tested to establish compliance with the specified requirements; testing shall be performed at the specified frequency. The Contracting Officer may specify the time and location of the tests. Copies of test results shall be furnished to the Contracting Officer within 24 hours of completion of the tests.

1.4.1 Sampling

Samples for laboratory testing shall be taken in conformance with ASTM D 75. When deemed necessary, the sampling will be observed by the Contracting Officer.

1.4.2 Tests

The following tests shall be performed in conformance with the applicable standards listed.

1.4.2.1 Sieve Analysis

Sieve analysis shall be made in conformance with ASTM C 117 and ASTM C 136. Sieves shall conform to ASTM E 11. Particle-size analysis of the soils shall also be completed in conformance with ASTM D 422.

1.4.2.2 Liquid Limit and Plasticity Index

Liquid limit and plasticity index shall be determined in accordance with ASTM D 4318.

1.4.2.3 Moisture-Density Determinations

The maximum density and optimum moisture content shall be determined in accordance with ASTM D 1557.

1.4.2.4 Field Density Tests

Density shall be field measured in accordance with ASTM D 1556 or ASTM D 2922. [For the method presented in ASTM D 1556 the base plate as shown in the drawing shall be used.] For the method presented in ASTM D 2922 the calibration curves shall be checked and adjusted if necessary using only the sand cone method as described in paragraph Calibration, of the ASTM publication. Tests performed in accordance with ASTM D 2922 result in a wet unit weight of soil and when using this method, ASTM D 3017 shall be used to determine the moisture content of the soil. The calibration curves

furnished with the moisture gauges shall also be checked along with density calibration checks as described in ASTM D 3017. The calibration checks of both the density and moisture gauges shall be made by the prepared containers of material method, as described in paragraph Calibration of ASTM D 2922, on each different type of material being tested at the beginning of a job and at intervals as directed.

1.4.2.5 Wear Test

Wear tests shall be made on ABC material in conformance with ASTM C 131.

1.4.3 Testing Frequency

1.4.3.1 Initial Tests

One of each of the following tests shall be performed on the proposed material prior to commencing construction to demonstrate that the proposed material meets all specified requirements when furnished. If materials from more than one source are going to be utilized, this testing shall be completed for each source.

a. Sieve Analysis [including 0.02 mm size material].

b. Liquid limit and plasticity index.

c. Moisture-density relationship.

d. Wear.

1.4.3.2 In Place Tests

Each of the following tests shall be performed on samples taken from the placed and compacted ABC. Samples shall be taken and tested at the rates indicated.

a. Density tests shall be performed on every lift of material placed and at a frequency of one set of tests for every 250 square meters, or portion thereof, of completed area.

b. Sieve Analysis shall be performed for every 500 metric tons, or portion thereof, of material placed.

c. Liquid limit and plasticity index tests shall be performed at the same frequency as the sieve analysis.

1.4.4 Approval of Material

The source of the material shall be selected 30 days prior to the time the material will be required in the work. Tentative approval of material will be based on initial test results. Final approval of the materials will be based on sieve analysis, liquid limit, and plasticity index tests performed on samples taken from the completed and fully compacted ABC.

1.5 WEATHER LIMITATIONS

Construction shall be done when the atmospheric temperature is above 2 degrees C. When the temperature falls below 2 degrees C, the Contractor shall protect all completed areas by approved methods against detrimental effects of freezing. Completed areas damaged by freezing, rainfall, or other weather conditions shall be corrected to meet specified requirements.

1.6 PLANT, EQUIPMENT, AND TOOLS

All plant, equipment, and tools used in the performance of the work will be subject to approval before the work is started and shall be maintained in satisfactory working condition at all times. The equipment shall be adequate and shall have the capability of producing the required compaction, meeting grade controls, thickness control, and smoothness requirements as set forth herein.

PART 2 PRODUCTS

2.1 AGGREGATES

The ABC shall consist of clean, sound, durable particles of crushed stone, crushed gravel, angular sand, or other approved material. ABC shall be free of lumps of clay, organic matter, and other objectionable materials or coatings. The portion retained on the 4.75 mm sieve shall be known as coarse aggregate; that portion passing the 4.75 mm sieve shall be known as fine aggregate.

2.1.1 Coarse Aggregate

Coarse aggregates shall be angular particles of uniform density. When the coarse aggregate is supplied from more than one source, aggregate from each source shall meet the specified requirements and shall be stockpiled separately.

a. Crushed Gravel: Crushed gravel shall be manufactured by crushing gravels, and shall meet all the requirements specified below.

b. Crushed Stone: Crushed stone shall consist of freshly mined quarry rock, and shall meet all the requirements specified below.

2.1.1.1 Aggregate Base Course

ABC coarse aggregate shall not show more than 50 percent loss when subjected to the Los Angeles abrasion test in accordance with ASTM C 131. The amount of flat and elongated particles shall not exceed 30 percent. A flat particle is one having a ratio of width to thickness greater than 3; an elongated particle is one having a ratio of length to width greater than 3. In the portion retained on each sieve specified, the crushed aggregates shall contain at least 50 percent by weight of crushed pieces having two or more freshly fractured faces with the area of each face being at least equal to 75 percent of the smallest midsectional area of the piece. When two fractures are contiguous, the angle between planes of the fractures must be at least 30 degrees in order to count as two fractured faces. Crushed gravel shall be manufactured from gravel particles 50 percent of

which, by weight, are retained on the maximum size sieve listed in TABLE 1.

2.1.2 Fine Aggregate

Fine aggregates shall be angular particles of uniform density. When the fine aggregate is supplied from more than one source, aggregate from each source shall meet the specified requirements. ABC fine aggregate shall consist of screenings, angular sand, crushed recycled concrete fines, or other finely divided mineral matter processed or naturally combined with the coarse aggregate.

2.1.3 Gradation Requirements

The specified gradation requirements shall apply to the completed base course. The aggregates shall have a maximum size of 25 mm and shall be continuously well graded within the limits specified in TABLE 1. Sieves shall conform to ASTM E 11.

TABLE 1. GRADATION OF AGGREGATES

Percentage by Weight Passing Square-Mesh Sieve

Sieve Designation	No. 1	No. 2	No. 3
50.0 mm	100	----	----
37.5 mm	70-100	100	----
25.0 mm	45-80	60-100	100
12.5 mm	30-60	30-65	40-70
4.75 mm	20-50	20-50	20-50
2.00 mm	15-40	15-40	15-40
0.425 mm	5-25	5-25	5-25
0.075 mm	0-8	0-8	0-8

NOTE 1: Particles having diameters less than 0.02 mm shall not be in excess of 3 percent by weight of the total sample tested.

NOTE 2: The values are based on aggregates of uniform specific gravity. If materials from different sources are used for the coarse and fine aggregates, they shall be tested in accordance with ASTM C 127 and ASTM C 128 to determine their specific gravities. If the specific gravities vary by more than 10 percent, the percentages passing the various sieves shall be corrected as directed by the Contracting Officer.

2.1.4 Liquid Limit and Plasticity Index

Liquid limit and plasticity index requirements shall apply to the completed course and shall also apply to any component that is blended to meet the required gradation. The portion of any component or of the completed course passing the 0.425 mm sieve shall be either nonplastic or have a liquid limit not greater than 25 and a plasticity index not greater than 5.

PART 3 EXECUTION

3.1 GENERAL REQUIREMENTS

When the ABC is constructed in more than one layer, the previously constructed layer shall be cleaned of loose and foreign matter by sweeping with power sweepers or power brooms, except that hand brooms may be used in areas where power cleaning is not practicable. Adequate drainage shall be provided during the entire period of construction to prevent water from collecting or standing on the working area. Line and grade stakes shall be provided as necessary for control. Grade stakes shall be in lines parallel to the centerline of the area under construction and suitably spaced for string lining.

3.2 OPERATION OF AGGREGATE SOURCES

Aggregates shall be obtained from offsite sources.

3.3 STOCKPILING MATERIAL

Prior to stockpiling of material, storage sites shall be cleared and leveled by the Contractor. All materials, including approved material available from excavation and grading, shall be stockpiled in the manner and at the locations designated. Aggregates shall be stockpiled on the cleared and leveled areas designated by the Contracting Officer to prevent segregation. Materials obtained from different sources shall be stockpiled separately.

3.4 PREPARATION OF UNDERLYING COURSE

Prior to constructing the ABC, the underlying course or subgrade shall be cleaned of all foreign substances. At the time of construction of the ABC, the underlying course shall contain no frozen material. The surface of the underlying course or subgrade shall meet specified compaction and surface tolerances. The underlying course shall conform to Section 02300 EARTHWORK. Ruts or soft yielding spots in the underlying courses, areas having inadequate compaction, and deviations of the surface from the requirements set forth herein shall be corrected by loosening and removing soft or unsatisfactory material and by adding approved material, reshaping to line and grade, and recompacting to specified density requirements. For cohesionless underlying courses containing sands or gravels, as defined in ASTM D 2487, the surface shall be stabilized prior to placement of the ABC. Stabilization shall be accomplished by mixing ABC into the underlying course and compacting by approved methods. The stabilized material shall be considered as part of the underlying course and shall meet all requirements of the underlying course. The finished underlying course shall not be disturbed by traffic or other operations and shall be maintained by the Contractor in a satisfactory condition until the ABC is placed.

3.5 INSTALLATION

3.5.1 Mixing the Materials

The coarse and fine aggregates shall be mixed in a stationary plant, or in a traveling plant or bucket loader on an approved paved working area. The Contractor shall make adjustments in mixing procedures or in equipment as directed to obtain true grades, to minimize segregation or degradation, to obtain the required water content, and to insure a satisfactory ABC meeting all requirements of this specification.

3.5.2 Placing

The mixed material shall be placed on the prepared subgrade or subbase in layers of uniform thickness with an approved spreader. When a compacted layer 150 mm or less in thickness is required, the material shall be placed in a single layer. When a compacted layer in excess of 150 mm is required, the material shall be placed in layers of equal thickness. No layer shall exceed 150 mm or less than 75 mm when compacted. The layers shall be so placed that when compacted they will be true to the grades or levels required with the least possible surface disturbance. Where the ABC is placed in more than one layer, the previously constructed layers shall be cleaned of loose and foreign matter by sweeping with power sweepers, power brooms, or hand brooms, as directed. Such adjustments in placing procedures or equipment shall be made as may be directed to obtain true grades, to minimize segregation and degradation, to adjust the water content, and to insure an acceptable ABC.

3.5.3 Grade Control

The finished and completed ABC shall conform to the lines, grades, and cross sections shown. Underlying material(s) shall be excavated and prepared at sufficient depth for the required ABC thickness so that the finished ABC with the subsequent surface course will meet the designated grades.

3.5.4 Edges of Base Course

Approved fill material shall be placed along the outer edges of ABC in sufficient quantities to compact to the thickness of the course being constructed, or to the thickness of each layer in a multiple layer course, allowing in each operation at least a 600 mm width of this material to be rolled and compacted simultaneously with rolling and compacting of each layer of ABC. If this base course material is to be placed adjacent to another pavement section, then the layers for both of these sections shall be placed and compacted along this edge at the same time.

3.5.5 Compaction

Each layer of the ABC shall be compacted as specified with approved compaction equipment. Water content shall be maintained during the compaction procedure to within plus or minus 2 percent of the optimum water content determined from laboratory tests as specified in paragraph SAMPLING AND TESTING. Rolling shall begin at the outside edge of the surface and proceed to the center, overlapping on successive trips at least one-half the width of the roller. Alternate trips of the roller shall be slightly different lengths. Speed of the roller shall be such that displacement of the aggregate does not occur. In all places not accessible to the rollers,

the mixture shall be compacted with hand-operated power tampers. Compaction shall continue until each layer has a degree of compaction that is at least 95 percent of laboratory maximum density through the full depth of the layer. The Contractor shall make such adjustments in compacting or finishing procedures as may be directed to obtain true grades, to minimize segregation and degradation, to reduce or increase water content, and to ensure a satisfactory ABC. Any materials that are found to be unsatisfactory shall be removed and replaced with satisfactory material or reworked, as directed, to meet the requirements of this specification.

3.5.6 Thickness

Compacted thickness of the aggregate course shall be as indicated. The total compacted thickness of the ABC course shall be within 13 mm of the thickness indicated. Where the measured thickness is more than 13 mm deficient, such areas shall be corrected by scarifying, adding new material of proper gradation, reblading, and recompacting as directed. Where the measured thickness is more than 13 mm thicker than indicated, the course shall be considered as conforming to the specified thickness requirements. Average job thickness shall be the average of all thickness measurements taken for the job, but shall be within 6 mm of the thickness indicated. The total thickness of the ABC course shall be measured at intervals in such a manner as to ensure one measurement for each 500 square meters of base course. Measurements shall be made in 75 mm diameter test holes penetrating the base course.

3.5.7 Finishing

The surface of the top layer of ABC shall be finished after final compaction by cutting any overbuild to grade and rolling with a steel-wheeled roller. Thin layers of material shall not be added to the top layer of base course to meet grade. If the elevation of the top layer of ABC is 13 mm or more below grade, then the top layer should be scarified to a depth of at least 75 mm and new material shall be blended in and compacted to bring to grade. Adjustments to rolling and finishing procedures shall be made as directed to minimize segregation and degradation, obtain grades, maintain moisture content, and insure an acceptable base course. Should the surface become rough, corrugated, uneven in texture, or traffic marked prior to completion, the unsatisfactory portion shall be scarified, reworked and recompacted or it shall be replaced as directed.

3.5.8 Smoothness

The surface of the top layer shall show no deviations in excess of 10 mm when tested with a 3.66 meter straightedge. Measurements shall be taken in successive positions parallel to the centerline of the area to be paved. Measurements shall also be taken perpendicular to the centerline at 20 meter intervals. Deviations exceeding this amount shall be corrected by removing material and replacing with new material, or by reworking existing material and compacting it to meet these specifications.

3.6 TRAFFIC

Completed portions of the ABC may be opened to limited traffic, provided there is no marring or distorting of the surface by the traffic. Heavy equipment shall not be permitted except when necessary to construction, and then the area shall be protected against marring or damage to the completed work.

3.7 MAINTENANCE

The ABC shall be maintained in a satisfactory condition until the full pavement section is completed and accepted. Maintenance shall include immediate repairs to any defects and shall be repeated as often as necessary to keep the area intact.

3.8 DISPOSAL OF UNSATISFACTORY MATERIALS

Any unsuitable materials that must be removed shall be disposed of as directed. No additional payments will be made for materials that must be replaced.

-- End of Section --

SECTION TABLE OF CONTENTS

DIVISION 02 - SITE WORK

SECTION 02741

HOT-MIX ASPHALT (HMA) FOR ROADS

PART 1 GENERAL

1.1 REFERENCES
1.2 DESCRIPTION OF WORK
1.3 SUBMITTALS
1.4 ASPHALT MIXING PLANT
1.5 HAULING EQUIPMENT
1.6 ASPHALT PAVERS
1.6.1 Receiving Hopper
1.6.2 Automatic Grade Controls
1.7 ROLLERS
1.8 WEATHER LIMITATIONS

PART 2 PRODUCTS

2.1 AGGREGATES
2.1.1 Coarse Aggregate
2.1.2 Fine Aggregate
2.1.3 Mineral Filler
2.1.4 Aggregate Gradation
2.2 ASPHALT CEMENT BINDER
2.3 MIX DESIGN
2.3.1 JMF Requirements
2.3.2 Adjustments to Field JMF

PART 3 EXECUTION

3.1 PREPARATION OF ASPHALT BINDER MATERIAL
3.2 PREPARATION OF MINERAL AGGREGATE
3.3 PREPARATION OF HOT-MIX ASPHALT MIXTURE
3.4 PREPARATION OF THE UNDERLYING SURFACE
3.5 TEST SECTION
3.5.1 Sampling and Testing for Test Section
3.5.2 Additional Test Sections
3.6 TESTING LABORATORY
3.7 TRANSPORTING AND PLACING
3.7.1 Transporting
3.7.2 Placing
3.8 COMPACTION OF MIXTURE
3.9 JOINTS
3.9.1 Transverse Joints
3.9.2 Longitudinal Joints
3.10 CONTRACTOR QUALITY CONTROL

3.10.1 General Quality Control Requirements
3.10.2 Quality Control Testing
3.10.2.1 Asphalt Content
3.10.2.2 Gradation
3.10.2.3 Temperatures
3.10.2.4 Aggregate Moisture
3.10.2.5 Moisture Content of Mixture
3.10.2.6 Laboratory Air Voids, Marshall Stability and Flow
3.10.2.7 In-Place Density
3.10.2.8 Grade and Smoothness
3.10.2.9 Additional Testing
3.10.2.10 QC Monitoring
3.10.3 Sampling
3.10.4 Control Charts
3.11 MATERIAL ACCEPTANCE AND PERCENT PAYMENT
3.11.1 Percent Payment
3.11.2 Sublot Sampling
3.11.3 Additional Sampling and Testing
3.11.4 Laboratory Air Voids
3.11.5 Mean Absolute Deviation
3.11.6 In-place Density
3.11.6.1 General Density Requirements
3.11.6.2 Mat Density
3.11.7 Grade
3.11.8 Surface Smoothness
3.11.8.1 Smoothness Requirements
3.11.8.2 Testing Method
3.11.8.3 Payment Adjustment for Smoothness

-- End of Section Table of Contents --

SECTION 02741

HOT-MIX ASPHALT (HMA) FOR ROADS

PART 1 GENERAL

1.1 REFERENCES

The publications listed below form a part of this specification to the extent referenced. The publications are referred to in the text by basic designation only.

AMERICAN ASSOCIATION OF STATE HIGHWAY AND TRANSPORTATION OFFICIALS (AASHTO)

AASHTO MP 2	(1998; Interim 1999) Superpave Volumetric Mix Design
AASHTO TP53	(1998; Interim 1999) Determining Asphalt Content of Hot Mix Asphalt by the Ignition Method

AMERICAN SOCIETY FOR TESTING AND MATERIALS (ASTM)

ASTM C 88	(1999a) Soundness of Aggregates by Use of Sodium Sulfate or Magnesium Sulfate
ASTM C 117	(1995) Materials Finer than 75 micrometer (No. 200) Sieve in Mineral Aggregates by Washing
ASTM C 131	(1996) Resistance to Degradation of Small-Size Coarse Aggregate by Abrasion and Impact in the Los Angeles Machine
ASTM C 136	(1996a) Sieve Analysis of Fine and Coarse Aggregates
ASTM C 566	(1997) Total Evaporable Moisture Content of Aggregate by Drying
ASTM C 1252	(1998) Uncompacted Void Content of Fine Aggregate (as Influenced by Particle Shape, Surface Texture, and Grading)
ASTM D 140	(2000) Sampling Bituminous Materials
ASTM D 242	(1995) Mineral Filler for Bituminous Paving Mixtures
ASTM D 995	(1995b) Mixing Plants for Hot-Mixed,

	Hot-Laid Bituminous Paving Mixtures
ASTM D 1461	(1985; R 1994) Moisture or Volatile Distillates in Bituminous Paving Mixtures
ASTM D 1559	(1989) Resistance to Plastic Flow of Bituminous Mixtures Using Marshall Apparatus
ASTM D 2041	(1995) Theoretical Maximum Specific Gravity and Density of Bituminous Paving Mixtures
ASTM D 2172	(1995) Quantitative Extraction of Bitumen from Bituminous Paving Mixtures
ASTM D 2419	(1995) Sand Equivalent Value of Soils and Fine Aggregate
ASTM D 2489	(2000) Degree of Particle Coating of Bituminous-Aggregate Mixtures
ASTM D 2726	(2000) Bulk Specific Gravity and Density of Non-Absorptive Compacted Bituminous Mixture
ASTM D 2950	(1997) Density of Bituminous Concrete in Place by Nuclear Method
ASTM D 3381	(1992; R 1999) Viscosity-Graded Asphalt Cement for Use in Pavement Construction
ASTM D 3665	(1999) Random Sampling of Construction Materials
ASTM D 3666	(2000) Minimum Requirements for Agencies Testing and Inspecting Bituminous Paving Materials
ASTM D 4125	(1994el)Asphalt Content of Bituminous Mixtures by the Nuclear Method
ASTM D 4791	(1999) Flat Particles, Elongated Particles, or Flat and Elongated Particles in Coarse Aggregate
ASTM D 4867/D 4867M	(1996) Effect of Moisture on Asphalt Concrete Paving Mixtures
ASTM D 5444	(1998) Mechanical Size Analysis of Extracted Aggregate
ASTM D 6307	(1998) Asphalt Content of Hot Mix Asphalt by Ignition Method

ASPHALT INSTITUTE (AI)

AI MS-2	(1997) Mix Design Methods for Asphalt Concrete and Other Hot-Mix Types

CALIFORNIA DEPARTMENT OF TRANSPORTATION (CDT)

CDT Test 526	(1978) Operation of California Profilograph and Evaluation of Profiles

CORPS OF ENGINEERS (COE)

COE CRD-C 171	(1995) Test Method for Determining Percentage of Crushed Particles in Aggregate

1.2 DESCRIPTION OF WORK

The work shall consist of pavement courses composed of mineral aggregate and asphalt material heated and mixed in a central mixing plant and placed on a prepared course. HMA designed and constructed in accordance with this section shall conform to the lines, grades, thicknesses, and typical cross sections shown on the drawings. Each course shall be constructed to the depth, section, or elevation required by the drawings and shall be rolled, finished, and approved before the placement of the next course.

1.3 SUBMITTALS

Government approval is required for submittals with a "G" designation; submittals not having a "G" designation are for information only. When used, a designation following the "G" designation identifies the office that will review the submittal for the Government. The "RE" designates that the Resident Office will review the submittal for the Government. The following shall be submitted in accordance with Section 01330 SUBMITTAL PROCEDURES:

SD-03 Product Data

Mix Design; G, RE.

Proposed JMF.

Contractor Quality Control; G, RE.

Quality control plan.

Material Acceptance and Percent Payment; G, RE.

A cceptance test results and pay calculations.

Aggregates; G, RE.

Sufficient materials to produce 90 kg of blended mixture for mix design

verification.

SD-06 Test Reports

Aggregates; G, RE.

QC Monitoring; G, RE.

Aggregate and QC test results.

SD-07 Certificates

Asphalt Cement Binder; G, RE.

Copies of certified test data.

Testing Laboratory; G, RE.

Certification of compliance.

Plant Scale Calibration Certification.

1.4 ASPHALT MIXING PLANT

Plants used for the preparation of hot-mix asphalt shall conform to the requirements of ASTM D 995 with the following changes:

a. Truck Scales. The asphalt mixture shall be weighed on approved certified scales at the Contractor's expense. Scales shall be inspected and sealed at least annually by an approved calibration laboratory.

b. Testing Facilities. The Contractor shall provide laboratory facilities at the plant for the use of the Government's acceptance testing and the Contractor's quality control testing.

c. Inspection of Plant. The Contracting Officer shall have access at all times, to all areas of the plant for checking adequacy of equipment; inspecting operation of the plant; verifying weights, proportions, and material properties; checking the temperatures maintained in the preparation of the mixtures and for taking samples. The Contractor shall provide assistance as requested, for the Government to procure any desired samples.

d. Storage Bins. Use of storage bins for temporary storage of hot-mix asphalt will be permitted as follows:

(1) The asphalt mixture may be stored in non-insulated storage bins for a period of time not exceeding 3 hours.

(2) The asphalt mixture may be stored in insulated storage bins for a period of time not exceeding 8 hours. The mix drawn from bins shall meet the same requirements as mix loaded directly into trucks.

1.5 HAULING EQUIPMENT

Trucks used for hauling hot-mix asphalt shall have tight, clean, and smooth metal beds. To prevent the mixture from adhering to them, the truck beds shall be lightly coated with a minimum amount of paraffin oil, lime solution, or other approved material. Petroleum based products shall not be used as a release agent. Each truck shall have a suitable cover to protect the mixture from adverse weather. When necessary to ensure that the mixture will be delivered to the site at the specified temperature, truck beds shall be insulated or heated and covers (tarps) shall be securely fastened.

1.6 ASPHALT PAVERS

Asphalt pavers shall be self-propelled, with an activated screed, heated as necessary, and shall be capable of spreading and finishing courses of hot-mix asphalt which will meet the specified thickness, smoothness, and grade. The paver shall have sufficient power to propel itself and the hauling equipment without adversely affecting the finished surface.

1.6.1 Receiving Hopper

The paver shall have a receiving hopper of sufficient capacity to permit a uniform spreading operation. The hopper shall be equipped with a distribution system to place the mixture uniformly in front of the screed without segregation. The screed shall effectively produce a finished surface of the required evenness and texture without tearing, shoving, or gouging the mixture.

1.6.2 Automatic Grade Controls

If an automatic grade control device is used, the paver shall be equipped with a control system capable of automatically maintaining the specified screed elevation. The control system shall be automatically actuated from either a reference line and/or through a system of mechanical sensors or sensor-directed mechanisms or devices which will maintain the paver screed at a predetermined transverse slope and at the proper elevation to obtain the required surface. The transverse slope controller shall be capable of maintaining the screed at the desired slope within plus or minus 0.1 percent. A transverse slope controller shall not be used to control grade. The controls shall be capable of working in conjunction with any of the following attachments:

a. Ski-type device of not less than 9.14 m in length.

b. Taut stringline set to grade.

c. Short ski or shoe for joint matching.

d. Laser control.

1.7 ROLLERS

Rollers shall be in good condition and shall be operated at slow speeds to avoid displacement of the asphalt mixture. The number, type, and weight of

rollers shall be sufficient to compact the mixture to the required density while it is still in a workable condition. Equipment which causes excessive crushing of the aggregate shall not be used.

1.8 WEATHER LIMITATIONS

The hot-mix asphalt shall not be placed upon a wet surface or when the surface temperature of the underlying course is less than specified in Table 1. The temperature requirements may be waived by the Contracting Officer, if requested; however, all other requirements, including compaction, shall be met.

Table 1. Surface Temperature Limitations of Underlying Course

Mat Thickness, mm	Degrees C
75 or greater	4
Less than 75	7

PART 2 PRODUCTS

2.1 AGGREGATES

Aggregates shall consist of crushed stone, crushed gravel, crushed slag, screenings, natural sand and mineral filler, as required. The portion of material retained on the 4.75 mm sieve is coarse aggregate. The portion of material passing the 4.75 mm sieve and retained on the 0.075 mm sieve is fine aggregate. The portion passing the 0.075 mm sieve is defined as mineral filler. All aggregate test results and samples shall be submitted to the Contracting Officer at least 14 days prior to start of construction.

2.1.1 Coarse Aggregate

Coarse aggregate shall consist of sound, tough, durable particles, free from films of material that would prevent thorough coating and bonding with the asphalt material and free from organic matter and other deleterious substances. All individual coarse aggregate sources shall meet the following requirements:

a. The percentage of loss shall not be greater than 40 percent after 500 revolutions when tested in accordance with ASTM C 131.

b. The percentage of loss shall not be greater than 18 percent after five cycles when tested in accordance with ASTM C 88 using magnesium sulfate [or 12 percent when using sodium sulfate].

c. At least 75 percent by weight of coarse aggregate shall have at least two or more fractured faces when tested in accordance with COE CRD-C 171. Fractured faces shall be produced by crushing.

d. The particle shape shall be essentially cubical and the aggregate shall not contain more than 20% percent, by weight, of flat and elongated

particles (3:1 ratio of maximum to minimum) when tested in accordance with ASTM D 4791.

2.1.2 Fine Aggregate

Fine aggregate shall consist of clean, sound, tough, durable particles. The aggregate particles shall be free from coatings of clay, silt, or any objectionable material and shall contain no clay balls. All individual fine aggregate sources shall have a sand equivalent value not less than 45 when tested in accordance with ASTM D 2419.

The fine aggregate portion of the blended aggregate shall have an uncompacted void content not less than 43.0 percent when tested in accordance with ASTM C 1252 Method A.

2.1.3 Mineral Filler

Mineral filler shall be nonplastic material meeting the requirements of ASTM D 242.

2.1.4 Aggregate Gradation

The combined aggregate gradation shall conform to gradations specified in Table 2, when tested in accordance with ASTM C 136 and ASTM C 117, and shall not vary from the low limit on one sieve to the high limit on the adjacent sieve or vice versa, but grade uniformly from coarse to fine.

Table 2. Aggregate Gradations

Sieve Size, mm	Gradation 1 Percent Passing by Mass	Gradation 2 Percent Passing by Mass	Gradation 3 Percent Passing
25.0	100	---	---
19.0	76-96	100	---
12.5	68-88	76-96	100
9.5	60-82	69-89	76-96
4.75	45-67	53-73	58-78
2.36	32-54	38-60	40-60
1.18	22-44	26-48	28-48
0.60	15-35	18-38	18-38
0.30	9-25	11-27	11-27
0.15	6-18	6-18	6-18
0.075	3-6	3-6	3-6

2.2 ASPHALT CEMENT BINDER

Asphalt cement binder shall conform to ASTM D 3381 Table 2, Viscosity Grade AC-40. Test data indicating grade certification shall be provided by the supplier at the time of delivery of each load to the mix plant. Copies of these certifications shall be submitted to the Contracting Officer. The supplier is defined as the last source of any modification to the binder. The Contracting Officer may sample and test the binder at the mix plant at

any time before or during mix production. Samples for this verification testing shall be obtained by the Contractor in accordance with ASTM D 140 and in the presence of the Contracting Officer. These samples shall be furnished to the Contracting Officer for the verification testing, which shall be at no cost to the Contractor. Samples of the asphalt cement specified shall be submitted for approval not less than 14 days before start of the test section.

2.3 MIX DESIGN

The Contractor shall develop the mix design. The asphalt mix shall be composed of a mixture of well-graded aggregate, mineral filler if required, and asphalt material. The aggregate fractions shall be sized, handled in separate size groups, and combined in such proportions that the resulting mixture meets the grading requirements of the job mix formula (JMF). No hot-mix asphalt for payment shall be produced until a JMF has been approved. The hot-mix asphalt shall be designed using procedures contained in AI MS-2 and the criteria shown in Table 3. If the Tensile Strength Ratio (TSR) of the composite mixture, as determined by ASTM D 4867/D 4867M is less than 75, the aggregates shall be rejected or the asphalt mixture treated with an approved anti-stripping agent. The amount of anti-stripping agent added shall be sufficient to produce a TSR of not less than 75. If an antistrip agent is required, it shall be provided by the Contractor at no additional cost. Sufficient materials to produce 90 kg of blended mixture shall be provided to the Contracting Officer for verification of mix design at least 14 days prior to construction of test section.

At the option of the contractor a currently used DOT superpave hot mix may be used in lieu of developing a new hot mix design study as described herein. The superpave volumetric mix shall be designed in accordance with AASHTO MP 2.

2.3.1 JMF Requirements

The job mix formula shall be submitted in writing by the Contractor for approval at least 14 days prior to the start of the test section and shall include as a minimum:

a. Percent passing each sieve size.

b. Percent of asphalt cement.

c. Percent of each aggregate and mineral filler to be used.

d. Asphalt viscosity grade, penetration grade, or performance grade.

e. Number of blows of hammer per side of molded specimen.

f. Laboratory mixing temperature.

g. Lab compaction temperature.

h. Temperature-viscosity relationship of the asphalt cement.

i. Plot of the combined gradation on the 0.45 power gradation chart, stating the nominal maximum size.

j. Graphical plots of stability, flow, air voids, voids in the mineral aggregate, and unit weight versus asphalt content as shown in AI MS-2.

k. Specific gravity and absorption of each aggregate.

l. Percent natural sand.

m. Percent particles with 2 or more fractured faces (in coarse aggregate).

n. Fine aggregate angularity.

o. Percent flat or elongated particles (in coarse aggregate).

p. Tensile Strength Ratio (TSR).

q. Antistrip agent (if required) and amount.

r. List of all modifiers and amount.

Table 3. Marshall Design Criteria

Test Property	75 Blow Mix	50 Blow Mix
Stability, newtons minimum	*8000	*4450
Flow, 0.25 mm	8-16	8-18
Air voids, percent	3-5	3-5
Percent Voids in mineral aggregate (VMA), (minimum)		
Gradation 1	13.0	13.0
Gradation 2	14.0	14.0
Gradation 3	15.0	15.0
TSR, minimum percent	75	75

* This is a minimum requirement. The average during construction shall be significantly higher than this number to ensure compliance with the specifications.
** Calculate VMA in accordance with AI MS-2, based on ASTM D 2726 bulk specific gravity for the aggregate.

2.3.2 Adjustments to Field JMF

The Laboratory JMF for each mixture shall be in effect until a new formula is approved in writing by the Contracting Officer. Should a change in sources of any materials be made, a new laboratory JMF design shall be performed and a new JMF approved before the new material is used. The Contractor will be allowed to adjust the Laboratory JMF within the limits specified below to optimize mix volumetric properties with the approval of the Contracting Officer. Adjustments to the Laboratory JMF shall be applied to the field (plant) established JMF and limited to those values as shown. Adjustments shall be targeted to produce or nearly produce 4 percent voids total mix (VTM).

Table 4. Field (Plant) Established JMF Tolerances

Sieves	Adjustments (plus or minus), percent
12.5 mm	3
4.75 mm	3
2.36 mm	3
0.075 mm	1
Binder Content	0.4

If adjustments are needed that exceed these limits, a new mix design shall be developed. Tolerances given above may permit the aggregate grading to be outside the limits shown in Table 2; while not desirable, this is acceptable.

PART 3 EXECUTION

3.1 PREPARATION OF ASPHALT BINDER MATERIAL

The asphalt cement material shall be heated avoiding local overheating and providing a continuous supply of the asphalt material to the mixer at a uniform temperature. The temperature of unmodified asphalts shall be no more than 160 degrees C when added to the aggregates. Modified asphalts shall be no more than 174 degrees C when added to the aggregates.

3.2 PREPARATION OF MINERAL AGGREGATE

The aggregate for the mixture shall be heated and dried prior to mixing. No damage shall occur to the aggregates due to the maximum temperature and rate of heating used. The temperature of the aggregate and mineral filler shall not exceed 175 degrees C when the asphalt cement is added. The temperature shall not be lower than is required to obtain complete coating and uniform distribution on the aggregate particles and to provide a mixture of satisfactory workability.

3.3 PREPARATION OF HOT-MIX ASPHALT MIXTURE

The aggregates and the asphalt cement shall be weighed or metered and introduced into the mixer in the amount specified by the JMF. The combined materials shall be mixed until the aggregate obtains a uniform coating of

asphalt binder and is thoroughly distributed throughout the mixture. Wet mixing time shall be the shortest time that will produce a satisfactory mixture, but no less than 25 seconds for batch plants. The wet mixing time for all plants shall be established by the Contractor, based on the procedure for determining the percentage of coated particles described in ASTM D 2489, for each individual plant and for each type of aggregate used. The wet mixing time will be set to at least achieve 95 percent of coated particles. The moisture content of all hot-mix asphalt upon discharge from the plant shall not exceed 0.5 percent by total weight of mixture as measured by ASTM D 1461.

3.4 PREPARATION OF THE UNDERLYING SURFACE

Immediately before placing the hot mix asphalt, the underlying course shall be cleaned of dust and debris. A prime coat and/or tack coat shall be applied in accordance with the contract specifications.

3.5 TEST SECTION

Prior to full production, the Contractor shall place a test section for each JMF used. The contractor shall construct a test section 75 - 150 m long and two paver passes wide placed for two lanes, with a longitudinal cold joint. The test section shall be of the same depth as the course which it represents. The underlying grade or pavement structure upon which the test section is to be constructed shall be the same as the remainder of the course represented by the test section. The equipment and personnel used in construction of the test section shall be the same equipment to be used on the remainder of the course represented by the test section. The test section shall be placed as part of the project pavement as approved by the Contracting Officer.

3.5.1 Sampling and Testing for Test Section

One random sample shall be taken at the plant, triplicate specimens compacted, and tested for stability, flow, and laboratory air voids. A portion of the same sample shall be tested for aggregate gradation and asphalt content. Four randomly selected cores shall be taken from the finished pavement mat, and four from the longitudinal joint, and tested for density. Random sampling shall be in accordance with procedures contained in ASTM D 3665. The test results shall be within the tolerances shown in Table 5 for work to continue. If all test results meet the specified requirements, the test section shall remain as part of the project pavement. If test results exceed the tolerances shown, the test section shall be removed and replaced at no cost to the Government and another test section shall be constructed. The test section shall be paid for with the first lot of paving

Table 5. Test Section Requirements for Material and Mixture Properties

Property	Specification Limit
Aggregate Gradation-Percent Passing (Individual Test Result)	

Table 5. Test Section Requirements for Material and Mixture Properties

Property	Specification Limit
4.75 mm and larger	JMF plus or minus 8
2.36, 1.18, 0.60, and 0.30 mm	JMF plus or minus 6
0.15 and 0.075 mm	JMF plus or minus 2.0
Asphalt Content, Percent (Individual Test Result)	JMF plus or minus 0.5
Laboratory Air Voids, Percent (Average of 3 specimens)	JMF plus or minus 1.0
VMA, Percent (Average of 3 specimens)	13 minimum
Stability, newtons (Average of 3 specimens)	4450 minimum
Flow, 0.25 mm (Average of 3 specimens)	8 - 18
Mat Density, Percent of Marshall (Average of 4 Random Cores)	97.0 - 100.5
Joint Density, Percent of Marshall (Average of 4 Random Cores)	95.5 - 100.5

3.5.2 Additional Test Sections

If the initial test section should prove to be unacceptable, the necessary adjustments to the JMF, plant operation, placing procedures, and/or rolling procedures shall be made. A second test section shall then be placed. Additional test sections, as required, shall be constructed and evaluated for conformance to the specifications. Full production shall not begin until an acceptable section has been constructed and accepted.

3.6 TESTING LABORATORY

The laboratory used to develop the JMF shall meet the requirements of ASTM D 3666. A certification signed by the manager of the laboratory stating that it meets these requirements or clearly listing all deficiencies shall be submitted to the Contracting Officer prior to the start of construction. The certification shall contain as a minimum:

a. Qualifications of personnel; laboratory manager, supervising technician, and testing technicians.

b. A listing of equipment to be used in developing the job mix.

c. A copy of the laboratory's quality control system.

d. Evidence of participation in the AASHTO Materials Reference

Laboratory (AMRL) program.

3.7 TRANSPORTING AND PLACING

3.7.1 Transporting

The hot-mix asphalt shall be transported from the mixing plant to the site in clean, tight vehicles. Deliveries shall be scheduled so that placing and compacting of mixture is uniform with minimum stopping and starting of the paver. Adequate artificial lighting shall be provided for night placements. Hauling over freshly placed material will not be permitted until the material has been compacted as specified, and allowed to cool to 60 degrees C. To deliver mix to the paver, the Contractor shall use a material transfer vehicle which shall be operated to produce continuous forward motion of the paver.

3.7.2 Placing

The mix shall be placed and compacted at a temperature suitable for obtaining density, surface smoothness, and other specified requirements. Upon arrival, the mixture shall be placed to the full width by an asphalt paver; it shall be struck off in a uniform layer of such depth that, when the work is completed, it shall have the required thickness and conform to the grade and contour indicated. The speed of the paver shall be regulated to eliminate pulling and tearing of the asphalt mat.

3.8 COMPACTION OF MIXTURE

After placing, the mixture shall be thoroughly and uniformly compacted by rolling. The surface shall be compacted as soon as possible without causing displacement, cracking or shoving. The sequence of rolling operations and the type of rollers used shall be at the discretion of the Contractor. The speed of the roller shall, at all times, be sufficiently slow to avoid displacement of the hot mixture and be effective in compaction. Any displacement occurring as a result of reversing the direction of the roller, or from any other cause, shall be corrected at once. Sufficient rollers shall be furnished to handle the output of the plant. Rolling shall continue until the surface is of uniform texture, true to grade and cross section, and the required field density is obtained. To prevent adhesion of the mixture to the roller, the wheels shall be kept properly moistened but excessive water will not be permitted. In areas not accessible to the roller, the mixture shall be thoroughly compacted with hand tampers. Any mixture that becomes loose and broken, mixed with dirt, contains check-cracking, or is in any way defective shall be removed full depth, replaced with fresh hot mixture and immediately compacted to conform to the surrounding area. This work shall be done at the Contractor's expense. Skin patching will not be allowed.

3.9 JOINTS

The formation of joints shall be made ensuring a continuous bond between the courses and to obtain the required density. All joints shall have the same texture as other sections of the course and meet the requirements for smoothness and grade.

3.9.1 Transverse Joints

The roller shall not pass over the unprotected end of the freshly laid mixture, except when necessary to form a transverse joint. When necessary to form a transverse joint, it shall be made by means of placing a bulkhead or by tapering the course. The tapered edge shall be cut back to its full depth and width on a straight line to expose a vertical face prior to placing material at the joint . The cutback material shall be removed from the project. In both methods, all contact surfaces shall be given a light tack coat of asphalt material before placing any fresh mixture against the joint.

3.9.2 Longitudinal Joints

Longitudinal joints which are irregular, damaged, uncompacted, cold (less than 80 degrees C at the time of placing adjacent lanes), or otherwise defective, shall be cut back a minimum of 50 mm from the edge with a cutting wheel to expose a clean, sound vertical surface for the full depth of the course. All cutback material shall be removed from the project. All contact surfaces shall be given a light tack coat of asphalt material prior to placing any fresh mixture against the joint. The Contractor will be allowed to use an alternate method if it can be demonstrated that density, smoothness, and texture can be met.

3.10 CONTRACTOR QUALITY CONTROL

3.10.1 General Quality Control Requirements

The Contractor shall develop an approved Quality Control Plan. Hot-mix asphalt for payment shall not be produced until the quality control plan has been approved. The plan shall address all elements which affect the quality of the pavement including, but not limited to:

a. Mix Design

b. Aggregate Grading

c. Quality of Materials

d. Stockpile Management

e. Proportioning

f. Mixing and Transportation

g. Mixture Volumetrics

h. Moisture Content of Mixtures

i. Placing and Finishing

j. Joints

k. Compaction

l. Surface Smoothness

3.10.2 Quality Control Testing

The Contractor shall perform all quality control tests applicable to these specifications and as set forth in the Quality Control Program. The testing program shall include, but shall not be limited to, tests for the control of asphalt content, aggregate gradation, temperatures, aggregate moisture, moisture in the asphalt mixture, laboratory air voids, stability, flow, in-place density, grade and smoothness. A Quality Control Testing Plan shall be developed as part of the Quality Control Program.

3.10.2.1 Asphalt Content

A minimum of two tests to determine asphalt content will be performed per lot (a lot is defined in paragraph MATERIAL ACCEPTANCE AND PERCENT PAYMENT) by one of the following methods: the extraction method in accordance with ASTM D 2172, Method A or B, the ignition method in accordance with the AASHTO TP53or ASTM D 6307, or the nuclear method in accordance with ASTM D 4125, provided the nuclear gauge is calibrated for the specific mix being used. For the extraction method, the weight of ash, as described in ASTM D 2172, shall be determined as part of the first extraction test performed at the beginning of plant production; and as part of every tenth extraction test performed thereafter, for the duration of plant production. The last weight of ash value obtained shall be used in the calculation of the asphalt content for the mixture.

3.10.2.2 Gradation

Aggregate gradations shall be determined a minimum of twice per lot from mechanical analysis of recovered aggregate in accordance with ASTM D 5444. When asphalt content is determined by the nuclear method, aggregate gradation shall be determined from hot bin samples on batch plants, or from the cold feed on drum mix plants. For batch plants, aggregates shall be tested in accordance with ASTM C 136 using actual batch weights to determine the combined aggregate gradation of the mixture.

3.10.2.3 Temperatures

Temperatures shall be checked at least four times per lot, at necessary locations, to determine the temperature at the dryer, the asphalt cement in the storage tank, the asphalt mixture at the plant, and the asphalt mixture at the job site.

3.10.2.4 Aggregate Moisture

The moisture content of aggregate used for production shall be determined a minimum of once per lot in accordance with ASTM C 566.

3.10.2.5 Moisture Content of Mixture

The moisture content of the mixture shall be determined at least once per

lot in accordance with ASTM D 1461 or an approved alternate procedure.

3.10.2.6 Laboratory Air Voids, Marshall Stability and Flow

Mixture samples shall be taken at least four times per lot and compacted into specimens, using 50 blows per side with the Marshall hammer as described in ASTM D 1559. After compaction, the laboratory air voids of each specimen shall be determined, as well as the Marshall stability and flow.

3.10.2.7 In-Place Density

The Contractor shall conduct any necessary testing to ensure the specified density is achieved. A nuclear gauge may be used to monitor pavement density in accordance with ASTM D 2950.

3.10.2.8 Grade and Smoothness

The Contractor shall conduct the necessary checks to ensure the grade and smoothness requirements are met in accordance with paragraph MATERIAL ACCEPTANCE AND PERCENT PAYMENT.

3.10.2.9 Additional Testing

Any additional testing, which the Contractor deems necessary to control the process, may be performed at the Contractor's option.

3.10.2.10 QC Monitoring

The Contractor shall submit all QC test results to the Contracting Officer on a daily basis as the tests are performed. The Contracting Officer reserves the right to monitor any of the Contractor's quality control testing and to perform duplicate testing as a check to the Contractor's quality control testing.

3.10.3 Sampling

When directed by the Contracting Officer, the Contractor shall sample and test any material which appears inconsistent with similar material being produced, unless such material is voluntarily removed and replaced or deficiencies corrected by the Contractor. All sampling shall be in accordance with standard procedures specified.

3.10.4 Control Charts

For process control, the Contractor shall establish and maintain linear control charts on both individual samples and the running average of last four samples for the parameters listed in Table 6, as a minimum. These control charts shall be posted as directed by the Contracting Officer and shall be kept current at all times. The control charts shall identify the project number, the test parameter being plotted, the individual sample numbers, the Action and Suspension Limits listed in Table 6 applicable to the test parameter being plotted, and the Contractor's test results. Target values from the JMF shall also be shown on the control charts as

indicators of central tendency for the cumulative percent passing, asphalt content, and laboratory air voids parameters. When the test results exceed either applicable Action Limit, the Contractor shall take immediate steps to bring the process back in control. When the test results exceed either applicable Suspension Limit, the Contractor shall halt production until the problem is solved. The Contractor shall use the control charts as part of the process control system for identifying trends so that potential problems can be corrected before they occur. Decisions concerning mix modifications shall be made based on analysis of the results provided in the control charts. The Quality Control Plan shall indicate the appropriate action which shall be taken to bring the process into control when certain parameters exceed their Action Limits.

(Table 6. Action and Suspension Limits for the Parameters to be Plotted on Individual and Running Average Control Charts

Parameter to be Plotted	Running Average of Individual Samples		Last Four Samples	
	Action Limit	Suspension Limit	Action Limit	Suspension Limit
4.75 mm sieve, Cumulative % Passing, deviation from JMF target; plus or minus values	6	8	4	5
0.6 mm sieve, Cumulative % Passing, deviation from JMF target; plus or minus values	4	6	3	4
0.075 mm sieve, Cumulative % Passing, deviation from JMF target; plus or minus values	1.4	2.0	1.1	1.5
Stability, newtons (minimum)				
75 Blow JMF	8000	7560	8440	8000
50 Blow JMF	4450	4000	4900	4450
Flow, 0.25 mm				
75 Blow JMF	8 min. 16 max.	7 min. 17 max.	9 min. 15 max.	8 min. 16 max.
50 Blow JMF	8 min. 18 max.	7 min. 19 max.	9 min. 17 max.	8 min. 18 max
Asphalt content, % deviation from JMF target; plus or minus value	0.4	0.5	0.2	0.3
Laboratory Air Voids, % deviation from JMF target value	No specific action and suspension limits set since this parameter is used to determine percent payment			
In-place Mat Density, % of	No specific action and suspension			

(Table 6. Action and Suspension Limits for the Parameters to be Plotted on Individual and Running Average Control Charts

Parameter to be Plotted	Running Average of Individual Samples		Last Four Samples	
	Action Limit	Suspension Limit	Action Limit	Suspension Limit
Marshall density	limits set since this parameter is used to determine percent payment			
In-place Joint Density, % of Marshall density	No specific action and suspension limits set since this parameter is used to determine percent payment)			

3.11 MATERIAL ACCEPTANCE AND PERCENT PAYMENT

Testing for acceptability of work will be performed by an independent laboratory hired by the Contractor. Test results and payment calculations shall be forwarded daily to the Contracting Officer. Acceptance of the plant produced mix and in-place requirements will be on a lot to lot basis. A standard lot for all requirements will be equal to 2000 metric tons. Where appropriate, adjustment in payment for individual lots of hot-mix asphalt will be made based on in-place density, laboratory air voids, grade and smoothness in accordance with the following paragraphs. Grade and surface smoothness determinations will be made on the lot as a whole. Exceptions or adjustments to this will be made in situations where the mix within one lot is placed as part of both the intermediate and surface courses, thus grade and smoothness measurements for the entire lot cannot be made. In order to evaluate laboratory air voids and in-place (field) density, each lot will be divided into four equal sublots.

3.11.1 Percent Payment

When a lot of material fails to meet the specification requirements for 100 percent pay as outlined in the following paragraphs, that lot shall be removed and replaced, or accepted at a reduced price which will be computed by multiplying the unit price by the lot's pay factor. The lot pay factor is determined by taking the lowest computed pay factor based on either laboratory air voids, in-place density, grade or smoothness (each discussed below). At the end of the project, an average of all lot pay factors will be calculated. If this average lot pay factor exceeds 95.0 percent, then the percent payment for the entire project will be 100 percent of the unit bid price. If the average lot pay factor is less than 95.0 percent, then each lot will be paid for at the unit price multiplied by the lot's pay factor. For any lots which are less than 2000 metric tons , a weighted lot pay factor will be used to calculate the average lot pay factor.

3.11.2 Sublot Sampling

One random mixture sample for determining laboratory air voids, theoretical maximum density, and for any additional testing the Contracting Officer

desires, will be taken from a loaded truck delivering mixture to each sublot, or other appropriate location for each sublot. All samples will be selected randomly, using commonly recognized methods of assuring randomness conforming to ASTM D 3665 and employing tables of random numbers or computer programs. Laboratory air voids will be determined from three laboratory compacted specimens of each sublot sample in accordance with ASTM D 1559. The specimens will be compacted within 2 hours of the time the mixture was loaded into trucks at the asphalt plant. Samples will not be reheated prior to compaction and insulated containers will be used as necessary to maintain the temperature.

3.11.3 Additional Sampling and Testing

The Contracting Officer reserves the right to direct additional samples and tests for any area which appears to deviate from the specification requirements. The cost of any additional testing will be paid for by the Government. Testing in these areas will be in addition to the lot testing, and the requirements for these areas will be the same as those for a lot.

3.11.4 Laboratory Air Voids

Laboratory air voids will be calculated by determining the Marshall density of each lab compacted specimen using ASTM D 2726 and determining the theoretical maximum density of every other sublot sample using ASTM D 2041. Laboratory air void calculations for each sublot will use the latest theoretical maximum density values obtained, either for that sublot or the previous sublot. The mean absolute deviation of the four laboratory air void contents (one from each sublot) from the JMF air void content will be evaluated and a pay factor determined from Table 7. All laboratory air void tests will be completed and reported within 24 hours after completion of construction of each lot.

3.11.5 Mean Absolute Deviation

An example of the computation of mean absolute deviation for laboratory air voids is as follows: Assume that the laboratory air voids are determined from 4 random samples of a lot (where 3 specimens were compacted from each sample). The average laboratory air voids for each sublot sample are determined to be 3.5, 3.0, 4.0, and 3.7. Assume that the target air voids from the JMF is 4.0. The mean absolute deviation is then:

Mean Absolute Deviation = (|3.5 - 4.0| + |3.0 - 4.0| + |4.0 - 4.0| + |3.7 - 4.0|/4

= (0.5 + 1.0 + 0.0 + 0.3)/4 = (1.8)/4 = 0.45

The mean absolute deviation for laboratory air voids is determined to be 0.45. It can be seen from Table 7 that the lot's pay factor based on laboratory air voids, is 100 percent.

Table 7. Pay Factor Based on Laboratory Air Voids

Mean Absolute Deviation of Lab Air Voids from JMF	Pay Factor, %
0.60 or less	100

Table 7. Pay Factor Based on Laboratory Air Voids

Mean Absolute Deviation of Lab Air Voids from JMF	Pay Factor, %
0.61 - 0.80	98
0.81 - 1.00	95
1.01 - 1.20	90
Above 1.20	reject (0)

3.11.6 In-place Density

3.11.6.1 General Density Requirements

For determining in-place density, one random core will be taken by the Government from the mat of each sublot. Each random core will be full thickness of the layer being placed. When the random core is less than 25 mm thick, it will not be included in the analysis. In this case, another random core will be taken. After air drying to a constant weight, cores obtained from the mat and from the joints will be used for in-place density determination.

3.11.6.2 Mat Density

The average in-place mat density is expressed as a percentage of the average Marshall density for the lot. The Marshall density for each lot will be determined as the average Marshall density of the four random samples (3 specimens compacted per sample). The average in-place mat density for a lot are determined and compared with Table 8 to calculate a pay factor per lot based on in-place density. All density results for a lot will be completed and reported within 24 hours after the construction of that lot.

Table 8. Pay Factor Based on In-place Density

Average Mat Density (4 Cores)	Pay Factor, %
97.9 or 100	100.0
97.8 or 100.1	99.9
97.7	99.8
97.6 or100.2	99.6
97.5	99.4
97.4 or 100.3	99.1
97.3	98.7
97.2 or 100.4	98.3
97.1	97.8
97.0 or 100.5	97.3
96.9	96.3
96.8 or 100.6	94.1
96.7	92.2
96.6 or 100.7	90.3
96.5	87.9
96.4 or 100.8	85.7
96.3	83.3

Table 8. Pay Factor Based on In-place Density

Average Mat Density (4 Cores)	Pay Factor, %
96.2 or 100.9	80.6
96.1	78.0
96.0 or 101.0	75.0
below 96.0or above 101.0	0.0 (reject)

3.11.7 Grade

The final wearing surface of pavement shall conform to the elevations and cross sections shown and shall vary not more than 15 mm from the plan grade established and approved at site of work. Finished surfaces at juncture with other pavements shall coincide with finished surfaces of abutting pavements. Deviation from the plan elevation will not be permitted in areas of pavements where closer conformance with planned elevation is required for the proper functioning of drainage and other appurtenant structures involved. The final wearing surface of the pavement will be tested for conformance with specified plan grade requirements. The grade will be determined by running lines of levels at intervals of 7.6 m, or less, longitudinally and transversely, to determine the elevation of the completed pavement surface. Within 5 working days, after the completion of a particular lot incorporating the final wearing surface, the Contracting Officer will inform the Contractor in writing, of the results of the grade-conformance tests. When more than 5 percent of all measurements made within a lot are outside the 15 mm tolerance, the pay factor based on grade for that lot will be 95 percent. In areas where the grade exceeds the tolerance by more than 50 percent, the Contractor shall remove the surface lift full depth; the Contractor shall then replace the lift with hot-mix asphalt to meet specification requirements, at no additional cost to the Government. Diamond grinding may be used to remove high spots to meet grade requirements. Skin patching for correcting low areas or planing or milling for correcting high areas will not be permitted.

3.11.8 Surface Smoothness

The Contractor shall use one of the following methods to test and evaluate surface smoothness of the pavement. All testing shall be performed in the presence of the Contracting Officer. Detailed notes of the results of the testing shall be kept and a copy furnished to the Government immediately after each day's testing. The profilograph method shall be used for all longitudinal and transverse testing, except where the runs would be less than 60 m in length and the ends where the straightedge shall be used. Where drawings show required deviations from a plane surface (crowns, drainage inlets, etc.), the surface shall be finished to meet the approval of the Contracting Officer.

3.11.8.1 Smoothness Requirements

a. Straightedge Testing: The finished surfaces of the pavements shall have no abrupt change of 6 mm or more, and all pavements shall be within the tolerances specified in Table 9 when checked with an approved 4 m

straightedge.

Table 9. Straightedge Surface Smoothness--Pavements

Pavement Category	Direction of Testing	Tolerance, mm
All paved areas	Longitudinal	6
	Transverse	6

b. Profilograph Testing: The finished surfaces of the pavements shall have no abrupt change of 3 mm or more, and all pavement shall have a Profile Index not greater than specified in Table 10 when tested with an approved California-type profilograph. If the extent of the pavement in either direction is less than 60 m , that direction shall be tested by the straightedge method and shall meet requirements specified above.

Table 10. Profilograph Surface Smoothness--Pavements

Pavement Category	Direction of Testing	Maximum Specified Profile Index (mm/km)
All Paved Areas	Longitudinal	140

3.11.8.2 Testing Method

After the final rolling, but not later than 24 hours after placement, the surface of the pavement in each entire lot shall be tested by the Contractor in such a manner as to reveal all surface irregularities exceeding the tolerances specified above. Separate testing of individual sublots is not required. If any pavement areas are ground, these areas shall be retested immediately after grinding. The entire area of the pavement shall be tested in both a longitudinal and a transverse direction on parallel lines. The transverse lines shall be 8 m or less apart, as directed. The longitudinal lines shall be at the centerline of each paving lane for lines less than 6.1 m and at the third points for lanes 6.1 m or greater. Other areas having obvious deviations shall also be tested. Longitudinal testing lines shall be continuous across all joints.

a. Straightedge Testing. The straightedge shall be held in contact with the surface and moved ahead one-half the length of the straightedge for each successive measurement. The amount of surface irregularity shall be determined by placing the freestanding (unleveled) straightedge on the pavement surface and allowing it to rest upon the two highest spots covered by its length, and measuring the maximum gap between the straightedge and the pavement surface in the area between these two high points.

b. Profilograph Testing. Profilograph testing shall be performed using approved equipment and procedures described in CDT Test 526. The equipment shall utilize electronic recording and automatic computerized reduction of data to indicate "must-grind" bumps and the Profile Index for the pavement. The "blanking band" shall be 5 mm wide and the "bump template" shall span 25 mm with an offset of 10 mm. The profilograph

shall be operated by an approved, factory-trained operator on the alignments specified above. A copy of the reduced tapes shall be furnished the Government at the end of each day's testing.

3.11.8.3 Payment Adjustment for Smoothness

a. Straightedge Testing. Location and deviation from straightedge for all measurements shall be recorded. When between 5.0 and 10.0 percent of all measurements made within a lot exceed the tolerance specified in paragraph Smoothness Requirements above, after any reduction of high spots or removal and replacement, the computed pay factor for that lot based on surface smoothness, will be 95 percent. When more than 10.0 percent of all measurements exceed the tolerance, the computed pay factor will be 90 percent. When between 15.0 and 20.0 percent of all measurements exceed the tolerance, the computed pay factor will be 75 percent. When 20.0 percent or more of the measurements exceed the tolerance, the lot shall be removed and replaced at no additional cost to the Government. Regardless of the above, any small individual area with surface deviation which exceeds the tolerance given above by more than 50 percent, shall be corrected by diamond grinding to meet the specification requirements above or shall be removed and replaced at no additional cost to the Government.

b. Profilograph Testing. Location and data from all profilograph measurements shall be recorded. When the Profile Index of a lot exceeds the tolerance specified in paragraph Smoothness Requirements above by 16 mm/km , but less than 32 mm/km, after any reduction of high spots or removal and replacement, the computed pay factor for that lot based on surface smoothness will be 95 percent. When the Profile Index exceeds the tolerance by 32 mm/km , but less than 47 mm/km, the computed pay factor will be 90 percent. When the Profile Index exceeds the tolerance by 47 mm/km , but less than 63 mm/km, the computed pay factor will be 75 percent. When the Profile Index exceeds the tolerance by 63 mm/km or more, the lot shall be removed and replaced at no additional cost to the Government. Regardless of the above, any small individual area with surface deviation which exceeds the tolerance given above by more than 79 mm/km or more, shall be corrected by grinding to meet the specification requirements above or shall be removed and replaced at no additional cost to the Government.

c. Bumps ("Must Grind" Areas). Any bumps ("must grind" areas) shown on the profilograph trace which exceed 10 mm in height shall be reduced by diamond grinding until they do not exceed 7.5 mm when retested. Such grinding shall be tapered in all directions to provide smooth transitions to areas not requiring grinding. The following will not be permitted: (1) skin patching for correcting low areas, (2) planing or milling for correcting high areas. At the Contractor's option, pavement areas, including ground areas, may be rechecked with the profilograph in order to record a lower Profile Index.

-- End of Section --

SECTION TABLE OF CONTENTS

DIVISION 02 - SITE WORK

SECTION 02748

BITUMINOUS TACK AND PRIME COATS

PART 1 GENERAL

1.1 REFERENCES
1.2 SUBMITTALS
1.3 PLANT, EQUIPMENT, MACHINES AND TOOLS
1.3.1 General Requirements
1.3.2 Bituminous Distributor
1.3.3 Power Brooms and Power Blowers
1.4 WEATHER LIMITATIONS

PART 2 PRODUCTS

2.1 TACK COAT
2.2 PRIME COAT

PART 3 EXECUTION

3.1 PREPARATION OF SURFACE
3.2 APPLICATION RATE
3.2.1 Tack Coat
3.2.2 Prime Coat
3.3 APPLICATION TEMPERATURE
3.3.1 Viscosity Relationship
3.3.2 Temperature Ranges
3.4 APPLICATION
3.4.1 General
3.4.2 Prime Coat
3.4.3 Tack Coat
3.5 CURING PERIOD
3.6 FIELD QUALITY CONTROL
3.7 SAMPLING AND TESTING
3.7.1 Sampling
3.7.2 Calibration Test
3.7.3 Trial Applications
3.7.3.1 Tack Coat Trial Application Rate
3.7.3.2 Prime Coat Trial Application Rate
3.7.4 Sampling and Testing During Construction

-- End of Section Table of Contents --

SECTION 02748

BITUMINOUS TACK AND PRIME COATS

PART 1 GENERAL

1.1 REFERENCES

The publications listed below form a part of this specification to the extent referenced. The publications are referred to in the text by basic designation only.

AMERICAN SOCIETY FOR TESTING AND MATERIALS (ASTM)

ASTM D 140	(2000) Sampling Bituminous Materials
ASTM D 977	(1998) Emulsified Asphalt
ASTM D 2027	(1976; R 1997) Cutback Asphalt (Medium-Curing Type)
ASTM D 2995	(1999) Determining Application Rate of Bituminous Distributors

1.2 SUBMITTALS

Government approval is required for submittals with a "G" designation; submittals not having a "G" designation are for information only. When used, a designation following the "G" designation identifies the office that will review the submittal for the Government. The "RE" designates that the Resident Office will review the submittal for the Government. Submit the following in accordance with Section 01330, SUBMITTAL PROCEDURES:

SD-06 Test Reports

Sampling and Testing.

Copies of all test results for bituminous materials, within 24 hours of completion of tests. Certified copies of the manufacturer's test reports indicating compliance with applicable specified requirements, not less than 30 days before the material is required in the work.

1.3 PLANT, EQUIPMENT, MACHINES AND TOOLS

1.3.1 General Requirements

Plant, equipment, machines and tools used in the work shall be subject to approval and shall be maintained in a satisfactory working condition at all times.

1.3.2 Bituminous Distributor

The distributor shall have pneumatic tires of such size and number to prevent rutting, shoving or otherwise damaging the base surface or other layers in the pavement structure. The distributor shall be designed and equipped to spray the bituminous material in a uniform coverage at the specified temperature, at readily determined and controlled rates with an allowable variation from the specified rate of not more than plus or minus 5 percent, and at variable widths. Distributor equipment shall include a separate power unit for the bitumen pump, full-circulation spray bars, tachometer, pressure gauges, volume-measuring devices, adequate heaters for heating of materials to the proper application temperature, a thermometer for reading the temperature of tank contents, and a hand hose attachment suitable for applying bituminous material manually to areas inaccessible to the distributor. The distributor shall be equipped to circulate and agitate the bituminous material during the heating process.

1.3.3 Power Brooms and Power Blowers

Power brooms and power blowers shall be suitable for cleaning the surfaces to which the bituminous coat is to be applied.

1.4 WEATHER LIMITATIONS

Bituminous coat shall be applied only when the surface to receive the bituminous coat is dry. Bituminous coat shall be applied only when the atmospheric temperature in the shade is 10 degrees C or above and when the temperature has not been below 2 degrees C for the 12 hours prior to application.

PART 2 PRODUCTS

2.1 TACK COAT

Emulsified asphalt shall conform to ASTM D 977 Type SS-1h.

2.2 PRIME COAT

Cutback asphalt shall conform to ASTM D 2027, Grade MC-70.

PART 3 EXECUTION

3.1 PREPARATION OF SURFACE

Immediately before applying the bituminous coat, all loose material, dirt, clay, or other objectionable material shall be removed from the surface to be treated. The surface shall be dry and clean at the time of treatment.

3.2 APPLICATION RATE

The exact quantities within the range specified, which may be varied to suit field conditions, will be determined by the Contracting Officer.

3.2.1 Tack Coat

Bituminous material for the tack coat shall be applied in quantities of not less than 0.20 liter nor more than 0.70 liter per square meter of pavement surface.

3.2.2 Prime Coat

Bituminous material for the prime coat shall be applied in quantities of not less than 0.70 liter nor more than 1.80 liters per square meter of pavement surface.

3.3 APPLICATION TEMPERATURE

3.3.1 Viscosity Relationship

Asphalt application temperature shall provide an application viscosity between 10 and 60 seconds, Saybolt Furol, or between 20 and 120 square mm/sec, kinematic. The temperature viscosity relation shall be furnished to the Contracting Officer.

3.3.2 Temperature Ranges

The viscosity requirements shall determine the application temperature to be used. The following is a normal range of application temperatures:

Liquid Asphalts	
MC-70	50-85 degrees C
Emulsions	
SS-1h	20-70 degrees C

3.4 APPLICATION

3.4.1 General

Following preparation and subsequent inspection of the surface, the bituminous coat shall be applied at the specified rate with uniform distribution over the surface to be treated. All areas and spots missed by the distributor shall be properly treated with the hand spray. Until the succeeding layer of pavement is placed, the surface shall be maintained by protecting the surface against damage and by repairing deficient areas at no additional cost to the Government. If required, clean dry sand shall be spread to effectively blot up any excess bituminous material. No smoking, fires, or flames other than those from the heaters that are a part of the equipment shall be permitted within 8 meters of heating, distributing, and transferring operations of bituminous material other than bituminous emulsions. All traffic, except for paving equipment used in constructing the surfacing, shall be prevented from using the underlying material, whether primed or not, until the surfacing is completed. The bituminous

coat shall conform to all requirements as described herein.

3.4.2 Prime Coat

The prime coat will be required if it will be at least seven days before a the surfacing (Asphalt cement hot mix concrete)layer is constructed on the underlying (base course, etc) compacted material. The type of liquid asphalt and application rate will be as specified herein. The Contractor shall protect the underlying from any damage (water, traffic, etc.) until the surfacing is placed. If the Contractor places the surfacing within seven days, the choice of protection measures or actions to be taken is at the Contractor's option. Damage to the underlying material caused by lack of, or inadequate, protection shall be repaired (recompacted or replaced) by approved methods at no additional cost to the Government. If the Contractor options to use the prime coat, it shall be applied as soon as possible after consolidation of the underlying material. To obtain uniform application of the prime coat on the surface treated at the junction of previous and subsequent applications, building paper shall be spread on the surface for a sufficient distance back from the ends of each application to start and stop the prime coat on the paper. Immediately after application, the building paper shall be removed and destroyed.

3.4.3 Tack Coat

Tack coat shall be applied to existing concrete or bituminous surfaces in preparation for placement of asphalt concrete pavement.

3.5 CURING PERIOD

Following application of the bituminous material and prior to application of the succeeding layer of pavement, the bituminous coat shall be allowed to cure and to obtain evaporation of any volatiles or moisture. Prime coat shall be allowed to cure without being disturbed for a period of at least 48 hours or longer, as may be necessary to attain penetration into the treated course.

3.6 FIELD QUALITY CONTROL

Samples of the bituminous material shall be tested for compliance with the applicable specified requirements. A sample shall be obtained and tested by the Contractor for every 1725 metric tons of bituminous material used.

3.7 SAMPLING AND TESTING

Sampling and testing shall be performed by an approved commercial testing laboratory or by facilities furnished by the Contractor. No work requiring testing will be permitted until the facilities have been inspected and approved.

3.7.1 Sampling

The samples of bituminous material, unless otherwise specified, shall be in accordance with ASTM D 140. Sources from which bituminous materials are to be obtained shall be selected and notification furnished the Contracting

Officer within 30 days after the award of the contract.

3.7.2 Calibration Test

The Contractor shall furnish all equipment, materials, and labor necessary to calibrate the bituminous distributor. Calibration shall be made with the approved job material and prior to applying the bituminous coat material to the prepared surface. Calibration of the bituminous distributor shall be in accordance with ASTM D 2995.

3.7.3 Trial Applications

Before providing the complete bituminous coat, three lengths of at least 30 meters for the full width of the distributor bar shall be applied to evaluate the amount of bituminous material that can be satisfactorily applied.

3.7.3.1 Tack Coat Trial Application Rate

Unless otherwise authorized, the trial application rate of bituminous tack coat materials shall be applied in the amount of 0.20 liters per square meter. Other trial applications shall be made using various amounts of material as may be deemed necessary.

3.7.3.2 Prime Coat Trial Application Rate

Unless otherwise authorized, the trial application rate of bituminous materials shall be applied in the amount of 1.10 liters per square meter . Other trial applications shall be made using various amounts of material as may be deemed necessary.

3.7.4 Sampling and Testing During Construction

Quality control sampling and testing shall be performed as required in paragraph FIELD QUALITY CONTROL.

-- End of Section --

<&

SECTION TABLE OF CONTENTS

DIVISION 02 - SITE WORK

SECTION 02821

FENCING

PART 1 GENERAL

1.1 REFERENCES
1.2 SUBMITTALS

PART 2 PRODUCTS

2.1 FENCE FABRIC
2.1.1 Chain Link Fence Fabric
2.2 GATES
2.3 POSTS
2.3.1 Metal Posts for Chain Link Fence and Post and Cable Railing
2.4 BRACES AND RAILS
2.5 WIRE
2.5.1 Tension Wire
2.6 CABLES FOR POST AND CABLE RAILING
2.7 ACCESSORIES
2.8 CONCRETE
2.9 PADLOCKS

PART 3 EXECUTION

3.1 INSTALLATION
3.2 EXCAVATION
3.3 POST INSTALLATION
3.3.1 Posts for Chain Link Fence
3.4 RAILS
3.4.1 Top Rail
3.4.2 Bottom Rail
3.5 BRACES AND TRUSS RODS
3.6 TENSION WIRES
3.7 CHAIN LINK FABRIC
3.8 GATE INSTALLATION
3.9 GROUNDING

-- End of Section Table of Contents --

SECTION 02821

FENCING

PART 1 GENERAL

1.1 REFERENCES

The publications listed below form a part of this specification to the extent referenced. The publications are referred to in the text by basic designation only.

AMERICAN SOCIETY FOR TESTING AND MATERIALS (ASTM)

ASTM A 153/A 153M	(2000) Zinc Coating (Hot Dip) on Iron and Steel Hardware
ASTM A 392	(1996) Zinc-Coated Steel Chain-Link Fence Fabric
ASTM A 475	(1998) Zinc-Coated Steel Wire Strand
ASTM A 491	(1996) Aluminum-Coated Steel Chain-Link Fence Fabric
ASTM A 780	(2000) Repair of Damaged and Uncoated Areas of Hot-Dipped Galvanized Coatings
ASTM A 824	(1995) Metallic-Coated Steel Marcelled Tension Wire for Use With Chain Link Fence
ASTM C 94/C 94M	(2000) Ready-Mixed Concrete
ASTM F 626	(1996a) Fence Fittings
ASTM F 883	(1997) Padlocks
ASTM F 900	(1994) Industrial and Commercial Swing Gates
ASTM F 1043	(2000) Strength and Protective Coatings on Metal Industrial Chain-Link Fence Framework
ASTM F 1083	(1997) Specification for Pipe, Steel, Hot-Dipped Zinc-Coated (Galvanized) Welded, for Fence Structures

1.2 SUBMITTALS

Government approval is required for submittals with a "G" designation; submittals not having a "G" designation are for information only. When

used, a designation following the "G" designation identifies the office that will review the submittal for the Government. The "RE" designates that the Resident Office will review the submittal for the Government. The following shall be submitted in accordance with Section 01330 SUBMITTAL PROCEDURES:

SD-07 Certificates

Chain Link Fence; G, RE.

Statement, signed by an official authorized to certify on behalf of the manufacturer, attesting that the chain link fence and component materials meet the specified requirements.

PART 2 PRODUCTS

2.1 FENCE FABRIC

Fence fabric shall conform to the following:

2.1.1 Chain Link Fence Fabric

ASTM A 392, Class 1, zinc-coated steel wire with minimum coating weight of 610 grams of zinc per square meter of coated surface, or ASTM A 491, Type I, aluminum-coated steel wire. Fabric shall be fabricated of 9 gauge wire woven in 50 mm mesh. Fabric height shall be 1.83 meters. Fabric shall be twisted and barbed on the top selvage and knuckled on the bottom selvage.

2.2 GATES

ASTM F 900 gate shall be the type and swing shown. Gate frames shall conform to strength and coating requirements of ASTM F 1083 for Group IA, steel pipe, with external coating Type A, nominal pipe size (NPS) 1-1/2. Gate frames shall conform to strength and coating requirements of ASTM F 1043, for Group IC, steel pipe with external coating Type A or Type B, nominal pipe size (NPS) 1-1/2. Gate fabric shall be as specified for chain link fabric. Gate leaves more than 2.44 m wide shall have either intermediate members and diagonal truss rods or shall have tubular members as necessary to provide rigid construction, free from sag or twist. Gate leaves less than 2.44 m wide shall have truss rods or intermediate braces. Gate fabric shall be attached to the gate frame by method standard with the manufacturer except that welding will not be permitted. Latches, hinges, stops, keepers, rollers, and other hardware items shall be furnished as required for the operation of the gate. Latches shall be arranged for padlocking so that the padlock will be accessible from both sides of the gate. Stops shall be provided for holding the gates in the open position.

2.3 POSTS

2.3.1 Metal Posts for Chain Link Fence and Post and Cable Railing

ASTM F 1083, zinc-coated. Group IA, with external coating Type A steel pipe. Group IC steel pipe, zinc-coated with external coating Type A or Type B and Group II , formed steel sections, shall meet the strength and

coating requirements of ASTM F 1043. Group III, ASTM F 1043 steel H-section may be used for line posts in lieu of line post shapes specified for the other classes. Sizes shall be as shown on the drawings. Line posts and terminal (corner, gate, and pull) posts selected shall be of the same designation throughout the fence. Gate post shall be for the gate type specified subject to the limitation specified in ASTM F 900.

2.4 BRACES AND RAILS

ASTM F 1083, zinc-coated, Group IA, steel pipe, size NPS 1-1/4. Group IC steel pipe, zinc-coated, shall meet the strength and coating requirements of ASTM F 1043. Group II, formed steel sections, size 42 mm, conforming to ASTM F 1043, may be used as braces and rails if Group II line posts are furnished.

2.5 WIRE

2.5.1 Tension Wire

Tension wire shall be Type I or Type II, Class 2 coating, in accordance with ASTM A 824.

2.6 CABLES FOR POST AND CABLE RAILING

Cables shall be prestretched, galvanized wire rope of the size indicated. Wire rope shall conform to ASTM A 475, high strength grade with Class A coating. Fittings and accessories shall be hot-dip galvanized.

2.7 ACCESSORIES

ASTM F 626. Ferrous accessories shall be zinc or aluminum coated. Truss rods shall be furnished for each terminal post. Truss rods shall be provided with turnbuckles or other equivalent provisions for adjustment. Tie wire for attaching fabric to rails, braces, and posts shall be 9 gauge steel wire and match the coating of the fence fabric. Miscellaneous hardware coatings shall conform to ASTM A 153/A 153M unless modified.

2.8 CONCRETE

ASTM C 94/C 94M, using 19 mm maximum size aggregate, and having minimum compressive strength of 21 MPa at 28 days. Grout shall consist of one part portland cement to three parts clean, well-graded sand and the minimum amount of water to produce a workable mix.

2.9 PADLOCKS

Padlocks shall conform to ASTM F 883, Type PO1 Grade 2. Padlocks shall be a combination commercial type Padlock Master #175 or equivalent

PART 3 EXECUTION

3.1 INSTALLATION

Fence shall be installed to the lines and grades indicated. The area on

either side of the fence line shall be cleared to the extent indicated. Line posts shall be spaced equidistant at intervals not exceeding 3 m. Terminal (corner, gate, and pull) posts shall be set at abrupt changes in vertical and horizontal alignment. Fabric shall be continuous between terminal posts; however, runs between terminal posts shall not exceed 152.4 m. Any damage to galvanized surfaces, including welding, shall be repaired with paint containing zinc dust in accordance with ASTM A 780.

3.2 EXCAVATION

Post holes shall be cleared of loose material. Waste material shall be spread where directed. The ground surface irregularities along the fence line shall be eliminated to the extent necessary to maintain a 50 mm clearance between the bottom of the fabric and finish grade.

3.3 POST INSTALLATION

3.3.1 Posts for Chain Link Fence

Posts shall be set plumb and in alignment. Except where solid rock is encountered, posts shall be set in concrete to the depth indicated on the drawings. Where solid rock is encountered with no overburden, posts shall be set to a minimum depth of 457 mm in rock. Where solid rock is covered with an overburden of soil or loose rock, posts shall be set to the minimum depth indicated on the drawing unless a penetration of 457 mm in solid rock is achieved before reaching the indicated depth, in which case depth of penetration shall terminate. All portions of posts set in rock shall be grouted. Portions of posts not set in rock shall be set in concrete from the rock to ground level. Posts set in concrete shall be set in holes not less than the diameter shown on the drawings. Diameters of holes in solid rock shall be at least 25 mm greater than the largest cross section of the post. Concrete and grout shall be thoroughly consolidated around each post, shall be free of voids and finished to form a dome. Concrete and grout shall be allowed to cure for 72 hours prior to attachment of any item to the posts. Group II line posts may be mechanically driven, for temporary fence construction only, if rock is not encountered. Driven posts shall be set to a minimum depth of 914 mm and shall be protected with drive caps when being set.

3.4 RAILS

3.4.1 Top Rail

Top rail shall be supported at each post to form a continuous brace between terminal posts. Where required, sections of top rail shall be joined using sleeves or couplings that will allow expansion or contraction of the rail.

3.4.2 Bottom Rail

The bottom rail shall be bolted to double rail ends and double rail ends shall be securely fastened to the posts. Bolts shall be peened to prevent easy removal. Bottom rail shall be installed before chain link fabric.

3.5 BRACES AND TRUSS RODS

Braces and truss rods shall be installed as indicated and in conformance with the standard practice for the fence furnished. Horizontal (compression) braces and diagonal truss (tension) rods shall be installed on fences over 1.83 m in height. A center brace or 2 diagonal truss rods shall be installed on 3.66 m fences. Braces and truss rods shall extend from terminal posts to line posts. Diagonal braces shall form an angle of approximately 40 to 50 degrees with the horizontal. No bracing is required on fences 1.83 m high or less if a top rail is installed.

3.6 TENSION WIRES

Tension wires shall be installed along the top and bottom of the fence line and attached to the terminal posts of each stretch of the fence. Top tension wires shall be installed within the top 102 mm of the installed fabric. Bottom tension wire shall be installed within the bottom 152 mm of the installed fabric. Tension wire shall be pulled taut and shall be free of sag.

3.7 CHAIN LINK FABRIC

Chain link fabric shall be installed on the side of the post indicated. Fabric shall be attached to terminal posts with stretcher bars and tension bands. Bands shall be spaced at approximately 381 mm intervals. The fabric shall be installed and pulled taut to provide a smooth and uniform appearance free from sag, without permanently distorting the fabric diamond or reducing the fabric height. Fabric shall be fastened to line posts at approximately 381 mm intervals and fastened to all rails and tension wires at approximately 610 mm intervals. Fabric shall be cut by untwisting and removing pickets. Splicing shall be accomplished by weaving a single picket into the ends of the rolls to be joined. The bottom of the installed fabric shall be 50 mm plus or minus 13 mm above the ground.

3.8 GATE INSTALLATION

Gates shall be installed at the locations shown. Hinged gates shall be mounted to swing as indicated. Latches, stops, and keepers shall be installed as required.

3.9 GROUNDING

Fences crossed by power lines of 600 volts or more shall be grounded at or near the point of crossing and at distances not exceeding 45 m on each side of crossing. Ground conductor shall consist of No. 8 AWG solid copper wire. Grounding electrodes shall be 19 mm by 3.05 m long copper-clad steel rod. Electrodes shall be driven into the earth so that the top of the electrode is at least 152 mm below the grade. Where driving is impracticable, electrodes shall be buried a minimum of 305 mm deep and radially from the fence. The top of the electrode shall be not less than 0.6 m or more than 2.4 m from the fence. Ground conductor shall be clamped to the fence and electrodes with bronze grounding clamps to create electrical continuity between fence posts, fence fabric, and ground rods. After installation the total resistance of fence to ground shall not be greater than 25 ohms.

-- End of Section --

SECTION TABLE OF CONTENTS

DIVISION 03 - CONCRETE

SECTION 03101

FORMWORK FOR CONCRETE

PART 1 GENERAL

1.1 REFERENCES
1.2 DESIGN REQUIREMENTS
1.3 SUBMITTALS
1.4 SHOP DRAWINGS

PART 2 PRODUCTS

2.1 MATERIALS
2.1.1 Forms and Form Liners
2.1.1.1 Class "A" Finish
2.1.1.2 Class "D" Finish
2.1.2 Form Coating
2.2 ACCESSORIES

PART 3 EXECUTION

3.1 INSTALLATION
3.1.1 Form Construction
3.1.2 Chamfering
3.1.3 Coating
3.2 FORM REMOVAL
3.2.1 Formwork Not Supporting Weight of Concrete
3.2.2 Formwork Supporting Weight of Concrete
3.3 INSPECTION

-- End of Section Table of Contents --

SECTION 03101

FORMWORK FOR CONCRETE

PART 1 GENERAL

1.1 REFERENCES

The publications listed below form a part of this specification to the extent referenced. The publications are referred to in the text by basic designation only.

ACI INTERNATIONAL (ACI)

ACI 347R	(1994; R 1999) Guide to Formwork for Concrete

AMERICAN SOCIETY FOR TESTING AND MATERIALS (ASTM)

ASTM C 31/C 31M	(2000) Making and Curing Concrete Test Specimens in the Field
ASTM C 39/C 39M	(1999) Compressive Strength of Cylindrical Concrete Specimens
ASTM C 1077	(1998) Laboratories Testing Concrete and Concrete Aggregates for Use in Construction and Criteria for Laboratory Evaluation

DEPARTMENT OF COMMERCE (DOC)

DOC PS 1	(1996) Voluntary Product Standard - Construction and Industrial Plywood

1.2 DESIGN REQUIREMENTS

The design, engineering, and construction of the formwork shall be the responsibility of the Contractor. The formwork shall be designed for anticipated live and dead loads and shall comply with the tolerances specified in Section 03301 CAST-IN-PLACE STRUCTURAL CONCRETE, paragraph CONSTRUCTION TOLERANCES. However, for surfaces with an ACI Class A surface designation, the allowable deflection for facing material between studs, for studs between walers and walers between bracing shall be limited to 0.0025 times the span. The formwork shall be designed as a complete system with consideration given to the effects of cementitious materials and mixture additives such as fly ash, cement type, plasticizers, accelerators, retarders, air entrainment, and others. The adequacy of formwork design and construction shall be monitored prior to and during concrete placement as part of the Contractor's approved Quality Control Plan.

1.3 SUBMITTALS

Government approval is required for submittals with a "G" designation; submittals not having a "G" designation are for information only. When used, a designation following the "G" designation identifies the office that will review the submittal for the Government. The "RE" designates that the Resident Office will review the submittal for the Government. The following shall be submitted in accordance with Section 01330 SUBMITTAL PROCEDURES:

SD-02 Shop Drawings

Shop Drawings; G, RE.

Drawings and design computations for all formwork required shall be submitted at least 30 days either before fabrication on site or before delivery of prefabricated forms. If reshoring is permitted, the method, including location, order, and time of erection and removal shall also be submitted for review.

SD-03 Product Data

Materials.

Manufacturer's literature shall be submitted for plywood, concrete form hard board, form accessories, prefabricated forms, and form coating, and form-lining materials.

SD-06 Test Reports

Inspection.

The Contractor shall submit field inspection reports for concrete forms and embedded items.

Formwork Not Supporting Weight of Concrete; G, RE…

If forms are to be removed in less than 24 hours on formwork not supporting the weight of concrete, the evaluation and results of the control cylinder tests shall be submitted to and approved before the forms are removed.

1.4 SHOP DRAWINGS

The shop drawings and data submitted shall include the type, size, quantity, and strength of all materials of which the forms are made, the plan for jointing of facing panels, details affecting the appearance, and the assumed design values and loading conditions.

PART 2 PRODUCTS

2.1 MATERIALS

2.1.1 Forms and Form Liners

Forms and form liners shall be fabricated with facing materials that will produce a finish meeting the specified irregularities in formed surface requirements as defined in ACI 347R. Forms and form liners shall be fabricated with facing materials as specified below.

2.1.1.1 Class "A" Finish

This class of finish shall apply to exposed concrete surfaces of channel walls and inside box culverts. The form facing material shall be composed of new, well-matched tongue-and-groove lumber or new plywood panels conforming to DOC PS 1, Grade B-B concrete form, Class I.

2.1.1.2 Class "D" Finish

This class of finish shall apply to concrete faces against which earthfill will be placed. The form facing may be of wood or steel.

2.1.2 Form Coating

Form coating shall be commercial formulation that will not bond with, stain, cause deterioration, or any other damage to concrete surfaces. The coating shall not impair subsequent treatment of concrete surfaces depending upon bond or adhesion nor impede the wetting of surfaces to be cured with water or curing compounds. If special form liners are to be used, the Contractor shall follow the recommendation of the form coating manufacturer.

2.2 ACCESSORIES

Ties and other similar form accessories to be partially or wholly embedded in the concrete shall be of a commercially manufactured type. After the ends or end fasteners have been removed, the embedded portion of metal ties shall terminate not less than 50 mm from any concrete surface either exposed to view or exposed to water. Plastic snap ties may be used in locations where the surface will not be exposed to view. Form ties shall be constructed so that the ends or end fasteners can be removed without spalling the concrete.

PART 3 EXECUTION

3.1 INSTALLATION

3.1.1 Form Construction

Forms shall be constructed true to the structural design and required alignment. The form surface and joints shall be mortar tight and supported to achieve safe performance during construction, concrete placement, and form removal. The Contractor shall continuously monitor the alignment and stability of the forms during all phases to assure the finished product will meet the required surface class specified in paragraph FORMS AND FORM LINERS and tolerances specified in paragraph DESIGN REQUIREMENTS. Failure of any supporting surface either due to surface texture, deflection or form collapse shall be the responsibility of the Contractor as will the replacement or correction of unsatisfactory surfaces. When forms for

continuous surfaces are placed in successive units, care shall be taken to fit the forms over the completed surface to obtain accurate alignment of the surface and to prevent leakage of mortar. Forms shall not be re-used if there is any evidence of defects which would impair the quality of the resulting concrete surface. All surfaces of used forms shall be cleaned of mortar and any other foreign material before reuse.

3.1.2 Chamfering

All exposed joints, edges and external corners shall be chamfered by molding placed in the forms unless the drawings specifically state that chamfering is to be omitted or as otherwise specified. Chamfered joints shall not be permitted where earth or rockfill is placed in contact with concrete surfaces. Chamfered joints shall be terminated 300 mm outside the limit of the earth or rockfill so that the end of the chamfers will be clearly visible.

3.1.3 Coating

Forms for exposed or painted surfaces shall be coated with form oil or a form-release agent before the form or reinforcement is placed in final position. The coating shall be used as recommended in the manufacturer's instructions. Forms for unexposed surfaces may be wet with water in lieu of coating immediately before placing concrete, except that, in cold weather when freezing temperatures are anticipated, coating shall be mandatory. Surplus coating on form surfaces and coating on reinforcing steel and construction joints shall be removed before placing concrete.

3.2 FORM REMOVAL

Forms shall not be removed without approval. The minimal time required for concrete to reach a strength adequate for removal of formwork without risking the safety of workers or the quality of the concrete depends on a number of factors including, but not limited to, ambient temperature, concrete lift heights, type and amount of concrete admixture, and type and amount of cementitious material in the concrete. It is the responsibility of the Contractor to consider all applicable factors and leave the forms in place until it is safe to remove them. In any case forms shall not be removed unless the minimum time or minimum compressive strength requirements below are met, except as otherwise directed or specifically authorized. When conditions are such as to justify the requirement, forms will be required to remain in place for a longer period. All removal shall be accomplished in a manner which will prevent damage to the concrete and ensure the complete safety of the structure. Where forms support more than one element, the forms shall not be removed until the form removal criteria are met by all supported elements. Form removal shall be scheduled so that all necessary repairs can be performed as specified in Section 03301 CAST-IN-PLACE STRUCTURAL CONCRETE, paragraph FORMED SERVICES. Evidence that concrete has gained sufficient strength to permit removal of forms shall be determined by tests on control cylinders. All control cylinders shall be stored in the structure or as near the structure as possible so they receive the same curing conditions and protection methods as given those portions of the structure they represent. Control cylinders shall be removed from the molds at an age of no more than 24 hours. All control

cylinders shall be prepared and tested in accordance with ASTM C 31/C 31M and ASTM C 39/C 39M at the expense of the Contractor by an independent laboratory that complies with ASTM C 1077 and shall be tested within 4 hours after removal from the site.

3.2.1 Formwork Not Supporting Weight of Concrete

Formwork for walls, columns, sides of beams, gravity structures, and other vertical type formwork not supporting the weight of concrete shall not be removed in less than 24 hours after concrete placement is completed.

3.2.2 Formwork Supporting Weight of Concrete

Formwork supporting weight of concrete and shoring shall not be removed until structural members have acquired sufficient strength to safely support their own weight and any construction or other superimposed loads to which the supported concrete may be subjected. As a minimum, forms shall be left in place until control concrete test cylinders indicate evidence the concrete has attained at least 70 percent of the compressive strength required for the structure in accordance with the quality and location requirements of Section 03301 CAST-IN-PLACE CONCRETE, paragraph REQUIRED AVERAGE COMPRESSIVE STRENGTH

3.3 INSPECTION

Forms and embedded items shall be inspected in sufficient time prior to each concrete placement by the Contractor in order to certify to the Contracting Officer that they are ready to receive concrete. The results of each inspection shall be reported in writing.

-- End of Section --

SECTION TABLE OF CONTENTS

DIVISION 03 - CONCRETE

SECTION 03151

EXPANSION, CONTRACTION AND CONSTRUCTION JOINTS IN CONCRETE FOR CIVIL WORKS

PART 1 GENERAL

1.1 REFERENCES
1.2 SUBMITTALS

PART 2 PRODUCTS

2.1 MATERIALS
2.1.1 Premolded Expansion Joint Filler Strips
2.1.2 Joint Seals and Sealants
2.1.2.1 Field Molded Sealants and Primer
2.1.2.2 Compression Seals and Lubricant
2.2 TESTS, INSPECTIONS, AND VERIFICATIONS
2.2.1 Materials Tests
2.2.1.1 Field-Molded Sealants

PART 3 EXECUTION

3.1 INSTALLATION
3.1.1 Expansion Joints
3.1.1.1 Joints With Field-Molded Sealant
3.1.1.2 Joints With Preformed Compression Seals
3.1.2 Contraction Joints

-- End of Section Table of Contents --

SECTION 03151

EXPANSION, CONTRACTION AND CONSTRUCTION JOINTS IN CONCRETE FOR CIVIL WORKS

PART 1 GENERAL

1.1 REFERENCES

The publications listed below form a part of this specification to the extent referenced. The publications are referred to in the text by basic designation only.

AMERICAN SOCIETY FOR TESTING AND MATERIALS (ASTM)

ASTM C 920	(1998) Elastomeric Joint Sealants
ASTM D 1751	(1999) Preformed Expansion Joint Filler for Concrete Paving and Structural Construction (Nonextruding and Resilient Bituminous Types)
ASTM D 1752	(1984; R 1996el) Preformed Sponge Rubber and Cork Expansion Joint Fillers for Concrete Paving and Structural Construction
ASTM D 2628	(1991; R 1998) Preformed Polychloroprene Elastomeric Joint Seals for Concrete Pavements
ASTM D 2835	(1989; R 1998) Lubricant for Installation of Preformed Compression Seals in Concrete Pavements

1.2 SUBMITTALS

Government approval is required for submittals with a "G" designation; submittals not having a "G" designation are for information only. When used, a designation following the "G" designation identifies the office that will review the submittal for the Government. The "RE" designates that the Resident Office will review the submittal for the Government. The following shall be submitted in accordance with Section 01330 SUBMITTAL PROCEDURES:

SD-04 Samples

Field Molded Sealants and Primer; G, RE.

Four liters of field-molded sealant and 1 L of primer (when primer is recommended by the sealant manufacturer) shall be provided for testing.

SD-06 Test Reports

Premolded Expansion Joint Filler Strips.

Compression Seals and Lubricant.

Certified manufacturer's test reports shall be provided for premolded expansion joint filler strips, compression seals and lubricant, to verify compliance with applicable specification.

PART 2 PRODUCTS

2.1 MATERIALS

2.1.1 Premolded Expansion Joint Filler Strips

Premolded expansion joint filler strips shall conform to ASTM D 1751 or ASTM D 1752, Type I, or resin impregnated fiberboard conforming to the physical requirements of ASTM D 1752.

2.1.2 Joint Seals and Sealants

2.1.2.1 Field Molded Sealants and Primer

Field molded sealants and primer shall conform to ASTM C 920, Type M, Grade NS, Class 25, use NT for vertical joints and Type M, Grade P, Class 25, use T for horizontal joints. Bond breaker material shall be polyethylene tape, coated paper, metal foil or similar type materials. The back-up material shall be compressible, nonshrink, nonreactive with sealant, and nonabsorptive material type such as extruded butyl or polychloroprene foam rubber.

2.1.2.2 Compression Seals and Lubricant

Compression seals shall conform to ASTM D 2628; lubricant for installation shall conform to ASTM D 2835.

2.2 TESTS, INSPECTIONS, AND VERIFICATIONS

2.2.1 Materials Tests

2.2.1.1 Field-Molded Sealants

Samples of sealant and primer, when use of primer is recommended by the manufacturer, as required in paragraph FIELD MOLDED SEALANTS AND PRIMER, shall be tested by and at the expense of the Government for compliance with paragraph FIELD MOLDED SEALANTS AND PRIMER.

PART 3 EXECUTION

3.1 INSTALLATION

Joint locations and details, including materials and methods of installation of joint fillers and waterstops, shall be as specified, as shown, and as directed. In no case shall any fixed metal be continuous

through an expansion or contraction joint.

3.1.1 Expansion Joints

Premolded filler strips shall have oiled wood strips secured to the top thereof and shall be accurately positioned and secured against displacement to clean, smooth concrete surfaces. The wood strips shall be slightly tapered, dressed and of the size required to install filler strips at the desired level below the finished concrete surface and to form the groove for the joint sealant or seals to the size shown. Material used to secure premolded fillers and wood strips to concrete shall not harm the concrete and shall be compatible with the joint sealant or seals. The wood strips shall not be removed until after the concrete curing period. The groove shall be thoroughly cleaned of all laitance, curing compound, foreign materials, protrusions of hardened concrete and any dust which shall be blown out of the groove with oil-free compressed air.

3.1.1.1 Joints With Field-Molded Sealant

Joints shall not be sealed when the sealant, air or concrete temperature is less than 4 degrees C. Immediately prior to installation of field molded sealants, the joint shall be cleaned of all debris and further cleaned using water, chemical solvents or other means as recommended by the sealant manufacturer. The joints shall be dry prior to filling with sealant. Bond breaker and back-up material shall be installed where required. Joints shall be primed and filled flush with joint sealant in accordance with the manufacturer's recommendations.

3.1.1.2 Joints With Preformed Compression Seals

The joint seals shall be installed with equipment which shall be capable of installing joint seals to the prescribed depth without cutting, nicking, twisting, or otherwise distorting or damaging the seal and with no more than five percent stretching of the seal. The sides of the joint and, if necessary, the sides of the compression seal shall be covered with a coating of lubricant, and the seal shall be installed to the depth indicated with joint installation equipment. Butt joints shall be coated with liberal applications of lubricant.

3.1.2 Contraction Joints

Joints requiring a bond breaker shall be coated with curing compound or with bituminous paint.

-- End of Section --

SECTION TABLE OF CONTENTS

DIVISION 03 - CONCRETE

SECTION 03200

CONCRETE REINFORCEMENT

PART 1 GENERAL

1.1 REFERENCES
1.2 SUBMITTALS
1.3 DELIVERY AND STORAGE

PART 2 PRODUCTS

2.1 DOWELS
2.2 REINFORCING STEEL
2.3 WIRE TIES
2.4 SUPPORTS

PART 3 EXECUTION

3.1 REINFORCEMENT
3.1.1 Placement
3.1.2 Splicing
3.2 DOWEL INSTALLATION

-- End of Section Table of Contents --

SECTION 03200

CONCRETE REINFORCEMENT

PART 1 GENERAL

1.1 REFERENCES

The publications listed below form a part of this specification to the extent referenced. The publications are referred to in the text by basic designation only.

ACI INTERNATIONAL (ACI)

ACI 318M	(1995) Building Code Requirements for Structural Concrete and Commentary (Metric)

AMERICAN SOCIETY FOR TESTING AND MATERIALS (ASTM)

ASTM A 53	(1999b) Pipe, Steel, Black and Hot-Dipped, Zinc-Coated, Welded and Seamless
ASTM A 615/A 615M	(2000) Deformed and Plain Billet-Steel Bars for Concrete Reinforcement
ASTM A 675/A 675M	(1990a; R 1995el) Steel Bars, Carbon, Hot-Wrought, Special Quality, Mechanical Properties

CONCRETE REINFORCING STEEL INSTITUTE (CRSI)

CRSI MSP-1	(1996) Manual of Standard Practice

1.2 SUBMITTALS

Government approval is required for submittals with a "G" designation; submittals not having a "G" designation are for information only. When used, a designation following the "G" designation identifies the office that will review the submittal for the Government. The "RE" designates that the Resident Office will review the submittal for the Government. The following shall be submitted in accordance with Section 01330 SUBMITTAL PROCEDURES:

SD-02 Shop Drawings

Reinforcement; G, RE.

Detail drawings showing reinforcing steel placement, schedules, sizes, grades, and splicing and bending details. Drawings shall show support details including types, sizes and spacing.

SD-07 Certificates

Reinforcing Steel.

Certified copies of mill reports attesting that the reinforcing steel furnished contains no less than 25 percent recycled scrap steel and meets the requirements specified herein, prior to the installation of reinforcing steel.

1.3 DELIVERY AND STORAGE

Reinforcement and accessories shall be stored off the ground on platforms, skids, or other supports.

PART 2 PRODUCTS

2.1 DOWELS

Dowels shall conform to ASTM A 675/A 675M, Grade 80. Steel pipe conforming to ASTM A 53, Schedule 80, may be used as dowels provided the ends are closed with metal or plastic inserts or with mortar.

2.2 REINFORCING STEEL

Reinforcing steel shall be deformed bars conforming to ASTM A 615/A 615M grades and sizes as indicated.

2.3 WIRE TIES

Wire ties shall be 16 gauge or heavier black annealed steel wire.

2.4 SUPPORTS

Bar supports for formed surfaces shall be designed and fabricated in accordance with CRSI MSP-1 and shall be steel or precast concrete blocks. Precast concrete blocks shall have wire ties and shall be not less than 100 by 100 mm when supporting reinforcement on ground. Precast concrete block shall have compressive strength equal to that of the surrounding concrete. Where concrete formed surfaces will be exposed to weather or where surfaces are to be painted, steel supports within 13 mm of concrete surface shall be galvanized, plastic protected or of stainless steel. Concrete supports used in concrete exposed to view shall have the same color and texture as the finish surface. For slabs on grade, supports shall be precast concrete blocks, plastic coated steel fabricated with bearing plates, or specifically designed wire-fabric supports fabricated of plastic.

PART 3 EXECUTION

3.1 REINFORCEMENT

Reinforcement shall be fabricated to shapes and dimensions shown and shall conform to the requirements of ACI 318M. Reinforcement shall be cold bent unless otherwise authorized. Bending may be accomplished in the field or at the mill. Bars shall not be bent after embedment in concrete. Safety

caps shall be placed on all exposed ends of vertical concrete reinforcement bars that pose a danger to life safety. Wire tie ends shall face away from the forms.

3.1.1 Placement

Reinforcement shall be free from loose rust and scale, dirt, oil, or other deleterious coating that could reduce bond with the concrete. Reinforcement shall be placed in accordance with ACI 318M at locations shown plus or minus one bar diameter. Reinforcement shall not be continuous through expansion joints and shall be as indicated through construction or contraction joints. Concrete coverage shall be as indicated or as required by ACI 318M . If bars are moved more than one bar diameter to avoid interference with other reinforcement, conduits or embedded items, the resulting arrangement of bars, including additional bars required to meet structural requirements, shall be approved before concrete is placed.

3.1.2 Splicing

Splices of reinforcement shall conform to ACI 318M and shall be made only as required or indicated. Splicing shall be by lapping or by mechanical or welded butt connection. Lapped bars shall be placed in contact and securely tied or spaced transversely apart to permit the embedment of the entire surface of each bar in concrete. Lapped bars shall not be spaced farther apart than one-fifth the required length of lap or 150 mm.

3.2 DOWEL INSTALLATION

Dowels shall be installed in slabs on grade at locations indicated and at right angles to joint being doweled. Dowels shall be accurately positioned and aligned parallel to the finished concrete surface before concrete placement. Dowels shall be rigidly supported during concrete placement. One end of dowels shall be coated with a bond breaker.

-- End of Section --

SECTION TABLE OF CONTENTS

DIVISION 03 - CONCRETE

SECTION 03301

CAST-IN-PLACE STRUCTURAL CONCRETE FOR CIVIL WORKS

PART 1 GENERAL

1.1 REFERENCES
1.2 SUBMITTALS
1.3 GOVERNMENT TESTING AND SAMPLING
1.3.1 Preconstruction Sampling and Testing
1.3.1.1 Aggregates
1.3.1.2 Cementitious Materials, Admixtures, and Curing Compound
1.3.2 Construction Testing by the Government
1.3.2.1 Chemical Admixtures Storage
1.3.2.2 Cement and Pozzolan
1.3.2.3 Concrete Strength
1.4 DESIGN REQUIREMENTS
1.4.1 Concrete Strength
1.4.2 Maximum Water-Cement (W/C) Ratio
1.5 CONSTRUCTION TOLERANCES
1.5.1 General
1.5.2 Appearance

PART 2 PRODUCTS

2.1 MATERIALS
2.1.1 Cementitious Materials
2.1.1.1 Portland Cement
2.1.1.2 High-Early-Strength Portland Cement
2.1.1.3 Pozzolan, Other than Silica Fume
2.1.2 Aggregates
2.1.2.1 General
2.1.2.2 Concrete Aggregate Sources
2.1.3 Chemical Admixtures
2.1.3.1 Air-Entraining Admixture
2.1.3.2 Accelerating Admixture
2.1.3.3 Water-Reducing or Retarding Admixture
2.1.4 Curing Materials
2.1.4.1 Membrane-Forming Curing Compound
2.1.4.2 Burlap
2.1.5 Water
2.1.6 Nonshrink Grout
2.1.7 Latex Bonding Compound
2.1.8 Epoxy Resin
2.2 CONCRETE MIXTURE PROPORTIONING
2.2.1 Quality of Mixture
2.2.2 Nominal Maximum-Size Coarse Aggregate

2.2.3 Air Content
2.2.4 Slump
2.2.5 Concrete Proportioning
2.2.6 Required Average Compressive Strength
2.2.6.1 Average Compressive Strength from Test Records
2.2.6.2 Average Compressive Strength without Previous Test Records

PART 3 EXECUTION

3.1 EQUIPMENT
3.1.1 Capacity
3.1.2 Batch Plant
3.1.2.1 Batching Equipment
3.1.2.2 Scales
3.1.2.3 Batching Tolerances
3.1.2.4 Moisture Control
3.1.3 Concrete Mixers
3.1.3.1 Stationary Mixers
3.1.3.2 Truck Mixers
3.1.4 Conveying Equipment
3.1.4.1 Buckets
3.1.4.2 Transfer Hoppers
3.1.4.3 Trucks
3.1.4.4 Chutes
3.1.4.5 Belt Conveyors
3.1.4.6 Concrete Pumps
3.1.5 Vibrators
3.2 PREPARATION FOR PLACING
3.2.1 Embedded Items
3.2.2 Concrete on Earth Foundations
3.2.3 Concrete on Rock Foundations
3.2.4 Construction Joint Treatment
3.2.4.1 Joint Preparation
3.2.4.2 Air-Water Cutting
3.2.4.3 High-Pressure Water Jet
3.2.4.4 Wet Sandblasting
3.2.4.5 Waste Disposal
3.3 PLACING
3.3.1 Placing Procedures
3.3.2 Placement by Pump
3.3.3 Time Interval Between Mixing and Placing
3.3.4 Cold-Weather Placing
3.3.5 Hot-Weather Placing
3.3.6 Consolidation
3.4 FINISHING
3.4.1 Unformed Surfaces
3.4.1.1 Float Finish
3.4.1.2 Trowel Finish
3.4.1.3 Broom Finish
3.4.2 Formed Surfaces
3.4.3 Formed Surface Repair
3.4.3.1 Class A Finishes
3.4.3.2 Class D Finish
3.4.3.3 Material and Procedure for Repairs

3.5 CURING AND PROTECTION
3.5.1 Duration
3.5.2 Moist Curing
3.5.3 Membrane-Forming Curing Compound
3.5.3.1 Pigmented Curing Compound
3.5.3.2 Nonpigmented Curing Compound
3.5.3.3 Application
3.5.4 Evaporation Retardant
3.5.5 Cold-Weather Curing and Protection
3.6 SETTING OF POSTS, BASE PLATES, AND BEARING PLATES
3.6.1 Setting of Posts and Plates
3.6.2 Nonshrink Grout Application
3.6.2.1 Mixing and Placing of Nonshrink Grout
3.6.2.2 Treatment of Exposed Surfaces
3.6.2.3 Curing
3.7 TESTS AND INSPECTIONS
3.7.1 General
3.7.2 Testing and Inspection Requirements
3.7.2.1 Fine Aggregate
3.7.2.2 Coarse Aggregate
3.7.2.3 Quality of Aggregates
3.7.2.4 Scales
3.7.2.5 Batch-Plant Control
3.7.2.6 Concrete Mixture
3.7.2.7 Inspection Before Placing
3.7.2.8 Placing
3.7.2.9 Vibrators
3.7.2.10 Curing
3.7.2.11 Cold-Weather Protection and Sealed Insulation Curing
3.7.2.12 Cold-Weather Protection Corrective Action
3.7.2.13 Mixer Uniformity
3.7.2.14 Mixer Uniformity Corrective Action
3.7.3 Reports

-- End of Section Table of Contents --

SECTION 03301

CAST-IN-PLACE STRUCTURAL CONCRETE FOR CIVIL WORKS

PART 1 GENERAL

1.1 REFERENCES

The publications listed below form a part of this specification to the extent referenced. The publications are referred to in the text by basic designation only.

ACI INTERNATIONAL (ACI)

ACI 117/117R	(1990; Errata) Standard Tolerances for Concrete Construction and Materials
ACI 211.1	(1991) Standard Practice for Selecting Proportions for Normal, Heavyweight, and Mass Concrete
ACI 214	(1977; R 1997) Recommended Practice for Evaluation of Strength Test Results of Concrete
ACI 305R	(1999) Hot Weather Concreting
ACI 318M	(1995) Metric Building Code Requirements for Structural Concrete and Commentary

AMERICAN SOCIETY FOR TESTING AND MATERIALS (ASTM)

ASTM C 31/C 31M	(2000) Making and Curing Concrete Test Specimens in the Field
ASTM C 33	(1999ae1) Concrete Aggregates
ASTM C 39/C 39M	(1999) Compressive Strength of Cylindrical Concrete Specimens
ASTM C 40	(1999) Organic Impurities in Fine Aggregates for Concrete
ASTM C 42/C 42M	(1999) Obtaining and Testing Drilled Cores and Sawed Beams of Concrete
ASTM C 87	(1983; R 1995el) Effect of Organic Impurities in Fine Aggregate on Strength of Mortar
ASTM C 94/C 94M	(2000) Ready-Mixed Concrete

ASTM C 127	(1988; R 1993el) Specific Gravity and Absorption of Coarse Aggregate
ASTM C 128	(1997) Specific Gravity and Absorption of Fine Aggregate
ASTM C 136	(1996a) Sieve Analysis of Fine and Coarse Aggregates
ASTM C 143/C 143M	(2000) Slump of Hydraulic Cement Concrete
ASTM C 150	(1999a) Portland Cement
ASTM C 172	(1999) Sampling Freshly Mixed Concrete
ASTM C 192/C 192M	(2000) Making and Curing Concrete Test Specimens in the Laboratory
ASTM C 231	(1997e1) Air Content of Freshly Mixed Concrete by the Pressure Method
ASTM C 260	(2000) Air-Entraining Admixtures for Concrete
ASTM C 309	(1998a) Liquid Membrane-Forming Compounds for Curing Concrete
ASTM C 494/C 494M	(1999a) Chemical Admixtures for Concrete
ASTM C 566	(1997) Total Evaporable Moisture Content of Aggregate by Drying
ASTM C 597	(1983; R 1997) Pulse Velocity Through Concrete
ASTM C 618	(2000) Coal Fly Ash and Raw or Calcined Natural Pozzolan for Use as a Mineral Admixture in Concrete
ASTM C 803/C 803M	(1997el) Penetration Resistance of Hardened Concrete
ASTM C 805	(1997) Rebound Number of Hardened Concrete
ASTM C 881	(1999) Epoxy-Resin-Base Bonding Systems for Concrete
ASTM C 1059	(1999) Latex Agents for Bonding Fresh to Hardened Concrete
ASTM C 1064/C 1064M	(1999) Temperature of Freshly Mixed Portland Cement Concrete

ASTM C 1077	(1998) Laboratories Testing Concrete and Concrete Aggregates for Use in Construction and Criteria for Laboratory Evaluation
ASTM C 1107	(1999) Packaged Dry, Hydraulic-Cement Grout(Nonshrink)
ASTM D 75	(1987; R 1997) Sampling Aggregates

CORPS OF ENGINEERS (COE)

COE CRD-C 94	(1995) Surface Retarders
COE CRD-C 100	(1975) Method of Sampling Concrete Aggregate and Aggregate Sources, and Selection of Material for Testing
COE CRD-C 104	(1980) Method of Calculation of the Fineness Modulus of Aggregate
COE CRD-C 143	(1962) Specifications for Meters for Automatic Indication of Moisture in Fine Aggregate
COE CRD-C 318	(1979) Cloth, Burlap, Jute (or Kenaf)
COE CRD-C 400	(1963) Requirements for Water for Use in Mixing or Curing Concrete
COE CRD-C 521	(1981) Standard Test Method for Frequency and Amplitude of Vibrators for Concrete

NATIONAL INSTITUTE OF STANDARDS AND TECHNOLOGY (NIST)

NIST HB 44	(1997) NIST Handbook 44: Specifications, Tolerances, and Other Technical Requirements for Weighing and Measuring Devices

NATIONAL READY-MIXED CONCRETE ASSOCIATION (NRMCA)

NRMCA CPMB 100	(1996) Concrete Plant Standards

1.2 SUBMITTALS

Government approval is required for submittals with a "G" designation; submittals not having a "G" designation are for information only. When used, a designation following the "G" designation identifies the office that will review the submittal for the Government. The "RE" designates that the Resident Office will review the submittal for the Government. The following shall be submitted in accordance with Section 01330 SUBMITTAL PROCEDURES:

SD-03 Product Data

Concrete Mixture Proportioning.

Concrete mixture proportions shall be determined by the Contractor and submitted for review. The concrete mixture quantities of all ingredients per cubic meter and nominal maximum coarse aggregate size that will be used in the manufacture of each quality of concrete shall be stated. Proportions shall indicate the mass of cement, pozzolan and ground granulated blast-furnace (GGBF) slag when used, and water; the mass of aggregates in a saturated surface-dry condition; and the quantities of admixtures. The submission shall be accompanied by test reports from a laboratory complying with ASTM C 1077 which show that proportions thus selected will produce concrete of the qualities indicated. No substitution shall be made in the source or type of materials used in the work without additional tests to show that the quality of the new materials and concrete are satisfactory.

Batch Plant.

The Contractor shall submit batch plant data to the Contracting Officer for review for conformance with applicable specifications.

Placing Equipment.

All placing equipment and methods shall be submitted for review by the Contracting Officer for conformance with paragraph CAPACITY.

Tests and Inspections.

Testing Technicians.

The Contractor shall submit statements that the concrete testing technicians and the concrete inspectors meet the specified requirements.

Construction Joint Treatment; G, RE.

The method and equipment proposed for joint cleanup and waste disposal shall be submitted for review and approval.

Curing and Protection; G, RE.

The curing medium and methods to be used shall be submitted for review and approval.

Cold-Weather Placing; G, RE.

If concrete is to be placed under cold-weather conditions, the proposed materials, methods, and protection shall be submitted for approval.

Hot-Weather Placing; G, RE.

Finishing; G, RE.

If concrete is to be placed under hot-weather conditions, the proposed materials and methods shall be submitted for review and approval.

SD-04 Samples

Aggregates; G, RE.

Cementitious Materials, Admixtures, and Curing Compound; G, RE.

Samples of materials for government testing and approval shall be submitted as required in paragraph PRECONSTRUCTION SAMPLING AND TESTING.

SD-06 Test Reports

Quality of Aggregates; G, RE.

Aggregate quality tests shall be submitted at least 30 days prior to start of concrete placement.

Mixer Uniformity.

The results of the initial mixer uniformity tests shall be submitted at least 5 days prior to the initiation of placing.

Tests and Inspections.

Test results and inspection reports shall be submitted daily and weekly as required in paragraph REPORTS.

SD-07 Certificates

Cementitious Materials.

Cementitious Materials, including Cement and Pozzolan, will be accepted on the basis of the manufacturer's certification of compliance, accompanied by mill test reports that materials meet the requirements of the specification under which they are furnished. Certification and mill test reports shall be from samples taken from the particular lot furnished. No cementitious materials shall be used until notice of acceptance has been given by the Contracting Officer. Cementitious materials will be subject to check testing from samples obtained at the source, at transfer points, or at the project site, as scheduled by the Contracting Officer, and such sampling will be by or under the supervision of the Government at its expense. Material not meeting specifications shall be promptly removed from the site of work.

Membrane-Forming Curing Compound.

Membrane-Forming Curing Compound shall be certified for compliance with all specification requirements.

Epoxy Resin.

Latex Bonding Compound.

Epoxy Resin and Latex Bonding Compound shall be certified for compliance with all specification requirements.

Nonshrink Grout.

Descriptive literature of the Nonshrink Grout proposed for use shall be furnished together with a certificate from the manufacturer stating that it is suitable for the application or exposure for which it is being considered.

1.3 GOVERNMENT TESTING AND SAMPLING

The Government will sample and test aggregates and concrete to determine compliance with the specifications. The Contractor shall provide facilities and labor as may be necessary for procurement of representative test samples. Samples of aggregates will be obtained at the point of batching in accordance with ASTM D 75. Concrete will be sampled in accordance with ASTM C 172.

1.3.1 Preconstruction Sampling and Testing

1.3.1.1 Aggregates

The aggregate sources listed in Section 2.1.2 for aggregates have been tested and at the time testing was performed were capable of producing materials of a quality required for this project provided suitable processing is performed. The Contractor may furnish materials from a listed source or from a source not listed. Samples from any source of coarse aggregate and any source of fine aggregate selected by the Contractor, consisting of not less than 70 kg of each size coarse aggregate and 35 kg of fine aggregate taken under the supervision of the Contracting Officer in accordance with COE CRD-C 100 shall be delivered to a local materials testing laboratory within 15 days after notice to proceed. Sampling and shipment of samples shall be at the Contractor's expense. Sixty days will be required to complete evaluation of the aggregates. Testing will be performed by and at the expense of the Government in accordance with the applicable COE CRD-C or ASTM test methods. The cost of testing one source for each size of aggregate will be borne by the Government. If the Contractor selects more than one source for each aggregate size or selects a substitute source for any size aggregate after the original source was tested, the cost of that additional testing will be borne by the Contractor. Tests to which aggregate may be subjected are listed in paragraph QUALITY. The material from the proposed source shall meet the quality requirements of this paragraph. The Government's test data and other information on aggregate quality of those sources listed at the end of this section are included in the Design Memorandum and are available for review in the district office. Testing of aggregates by the Government does not relieve the Contractor of the requirements outlined in paragraph TESTS AND INSPECTIONS.

1.3.1.2 Cementitious Materials, Admixtures, and Curing Compound

At least 60 days in advance of concrete placement, the Contractor shall

notify the Contracting Officer of the sources for cementitious materials, admixtures, and curing compound, along with sampling location, brand name, type, and quantity to be used in the manufacture and/or curing of the concrete.

1.3.2 Construction Testing by the Government

Sampling and testing will be performed by and at the expense of the Government except as otherwise specified. No material shall be used until notice has been given by the Contracting Officer that test results are satisfactory.

1.3.2.1 Chemical Admixtures Storage

Chemical admixtures that have been in storage at the project site for longer than 6 months or that have been subjected to freezing shall be retested at the expense of the Contractor when directed by the Contracting Officer and shall be rejected if test results are not satisfactory. Chemical admixtures will be accepted based on compliance with the requirements of paragraph CHEMICAL ADMIXTURES.

1.3.2.2 Cement and Pozzolan

If cement or pozzolan is to be obtained from more than one source, the initial notification shall state the estimated amount to be obtained from each source and the proposed schedule of shipments.

a. Prequalified Cement Sources - Cement shall be delivered and used directly from a mill of a producer designated as a qualified source. Samples of cement for check testing will be taken at the project site or concrete-producing plant by a representative of the Contracting Officer for testing at the expense of the Government. A list of prequalified cement sources is available from Director, U.S. Army Corps of Engineers, Engineer Research and Development Center - Structures Laboratory, 3909 Halls Ferry Road, Vicksburg, MS 39180-6199, ATTN: CEERD-SC.

b. Prequalified Pozzolan Sources - Pozzolan shall be delivered and used directly from a producer designated as a qualified source. Samples of pozzolan for check testing will be taken at the project site by a representative of the Contracting Officer for testing at the expense of the Government. A list of prequalified pozzolan sources is available from the Director, U.S. Army Corps of Engineers, Engineer Research and Development Center - Structures Laboratory, 3909 Halls Ferry Road, Vicksburg, MS 39180-6199, ATTN: CEERD-SC.

1.3.2.3 Concrete Strength

Compressive strength test specimens will be made by the Government and cured in accordance with ASTM C 31/C 31M and tested in accordance with ASTM C 39/C 39M. The strength of the concrete will be considered satisfactory so long as the average of all sets of three consecutive test results equals or exceeds the specified compressive strength f'c and no individual test result falls below the specified strength f'c by more than 3.5 MPa. A

"test" is defined as the average of two companion cylinders, or if only one cylinder is tested, the results of the single cylinder test. Additional analysis or testing, including nondestructive testing, taking cores and/or load tests may be required at the Contractor's expense when the strength of the concrete in the structure is considered potentially deficient.

a. Investigation of Low-Strength Test Results - When any strength test of standard-cured test cylinders falls below the specified strength requirement by more than 3.5 MPa or if tests of field-cured cylinders indicate deficiencies in protection and curing, steps shall be taken to assure that the load-carrying capacity of the structure is not jeopardized. Nondestructive testing in accordance with ASTM C 597, ASTM C 803/C 803M, or ASTM C 805 may be permitted by the Contracting Officer to estimate the relative strengths at various locations in the structure as an aid in evaluating concrete strength in place or for selecting areas to be cored. Such tests shall not be used as a basis for acceptance or rejection.

b. Testing of Cores - When the strength of concrete in place is considered potentially deficient, cores shall be obtained and tested in accordance with ASTM C 42/C 42M. At least three representative cores shall be taken from each member or area of concrete in place that is considered potentially deficient. The location of cores will be determined by the Contracting Officer to least impair the performance of the structure. Concrete in the area represented by the core testing will be considered adequate if the average strength of the cores is equal to at least 85 percent of the specified strength requirement and if no single core is less than 75 percent of the specified strength requirement.

c. Load Tests - If the core tests are inconclusive or impractical to obtain or if structural analysis does not confirm the safety of the structure, load tests may be directed by the Contracting Officer in accordance with the requirements of ACI 318M . Concrete work evaluated by structural analysis or by results of a load test shall be corrected in a manner satisfactory to the Contacting Officer. All investigations, testing, load tests, and correction of deficiencies will be performed and approved by the Contracting Officer at the expense of the Contractor, except that if all concrete is in compliance with the plans and specifications, the cost of investigations, testing, and load tests will be at the expense of the Government.

1.4 DESIGN REQUIREMENTS

1.4.1 Concrete Strength

Specified compressive strength f'c shall be 30 MPa at 28 days for all concrete structures.

1.4.2 Maximum Water-Cement (W/C) Ratio

Maximum W/C shall be 0.45 for all concrete structures.

1.5 CONSTRUCTION TOLERANCES

1.5.1 General

The definitions of the terms used in the following tables shall be as defined in ACI 117/117R. Level and grade tolerance measurements of slabs shall be made as soon as possible after finishing. When forms or shoring are used, the measurements shall be made prior to removal. Tolerances are not cumulative. The most restrictive tolerance controls. Tolerances shall not extend the structure beyond legal boundaries. Except as specified otherwise, plus tolerance increases the amount or dimension to which it applies, or raises a level alignment, and minus tolerance decreases the amount or dimension to which it applied, or lowers a level alignment. A tolerance without sign means plus or minus. Where only one signed tolerance is specified, there is no limit in the other direction.

TOLERANCE FOR FINISHED FORMED CONCRETE SURFACES

(1) Vertical alignment

Formed surfaces slope with respect to the specified plane

All conditions ..... 10 mm in 3000 mm

(2) Abrupt variation
The offset between concrete surfaces for the following classes of surface:

Class A ..... 3 mm
Class B ..... 6 mm
Class C ..... 6 mm
Class D ..... 25 mm

(3) Gradual variation

Surface finish tolerances as measured by placing a freestanding (unleveled), 1.5 m straightedge for plane surface or curved template for curved surface anywhere on the surface and allowing it to rest upon two high spots within 72 hr after concrete placement. The gap at any point between the straightedge or template and the surface shall not exceed:

Class A ..... 3 mm
Class B ..... 6 mm
Class C ..... 13 mm
Class D ..... 25 mm

TOLERANCES FOR CHANNEL LINING

(1) Lateral alignment

Alignment of tangents ..... 50 mm
Alignment of curves ..... 100 mm
Width of section at any height ..... 0.0025W + 25 mm

(2) Level alignment

Profile grade ..... 25 mm
Surface of invert ..... 6 mm
Height of lining ..... 0.005H + 25 mm

(3) Cross-sectional dimensions

Thickness of lining cross section: 10 percent specified thickness provided average thickness is maintained as determined by daily batch volumes.

1.5.2 Appearance

Permanently exposed surfaces shall be cleaned, if stained or otherwise discolored, by a method that does not harm the concrete and that is approved by the Contracting Officer.

PART 2 PRODUCTS

2.1 MATERIALS

2.1.1 Cementitious Materials

Cementitious materials shall be portland cement, or portland-pozzolan cement, and shall conform to appropriate specifications listed below.

2.1.1.1 Portland Cement

ASTM C 150, Type V low alkali.

2.1.1.2 High-Early-Strength Portland Cement

ASTM C 150, Type III, with C_3A limited to 8 percent low alkali, used only when specifically approved in writing.

2.1.1.3 Pozzolan, Other than Silica Fume

Pozzolan shall conform to ASTM C 618, Class F, with the optional requirements for multiple factor, drying shrinkage, and uniformity of Table 2A.

2.1.2 Aggregates

2.1.2.1 General

Concrete aggregates may be furnished from any source capable of meeting the quality requirements of ASTM C 33. No guarantee is given or implied that any of the listed sources are currently capable of producing aggregates that meet the requirements of ASTM C 33. Fine and coarse aggregates shall conform to the grading requirements of ASTM C 33. The nominal maximum size shall be as listed in paragraph NOMINAL MAXIMUM-SIZE COARSE AGGREGATE. Where the use of highway department gradations are permitted, proposed gradations shall be submitted for approval.

2.1.2.2 Concrete Aggregate Sources

a. List of Sources - The concrete aggregates sources may be selected from the following list:

Nevada Ready Mix	Lone Mountain Pit
CSR Materials	Buffalo Road Pit
Hanson Aggregates	Henderson

b. Selection of Source - After the award of the contract, the Contractor shall designate in writing only one source or combination of sources from which he proposes to furnish aggregates. If the Contractor proposes to furnish aggregates from a source or from sources not listed at the end of this section, he may designate only a single source or single combination of sources for aggregates. Regardless of the source, selected samples for acceptance testing shall be provided as required by paragraph GOVERNMENT TESTING AND SAMPLING. If a source for coarse or fine aggregates so designated by the Contractor does not meet the quality requirements stated in paragraph QUALITY, the Contractor may not submit for approval other non-listed sources but shall furnish the coarse or fine aggregate, as the case may be, from sources listed above at no additional cost to the Government.

2.1.3 Chemical Admixtures

Chemical admixtures to be used, when required or permitted, shall conform to the appropriate specification listed.

2.1.3.1 Air-Entraining Admixture

The air-entraining admixture shall conform to ASTM C 260 and shall consistently cause the concrete to have an air content in the specified ranges under field conditions.

2.1.3.2 Accelerating Admixture

Accelerators shall meet the requirements of ASTM C 494/C 494M, Type C or E, except that calcium chloride or admixtures containing calcium chloride shall not be used.

2.1.3.3 Water-Reducing or Retarding Admixture

a. Water-Reducing or Retarding Admixtures: ASTM C 494/C 494M, Type A, B, or D, except that the 6-month and 1-year compressive strength tests

are waived.

b. High-Range Water Reducing Admixture: ASTM C 494/C 494M, Type F or G except that the 6-month and 1-year strength requirements shall be waived. The admixture may be used only when approved by the Contracting Officer, such approval being contingent upon particular mixture control as described in the Contractor's Quality Control Plan.

2.1.4 Curing Materials

2.1.4.1 Membrane-Forming Curing Compound

The membrane-forming curing compound shall conform to ASTM C 309, Type 2, except a styrene acrylate or chlorinated rubber compound meeting Class B requirements shall be used for surfaces that are to be painted or are to receive bituminous roofing, or waterproofing, or floors that are to receive adhesive applications of resilient flooring. The curing compound selected shall be compatible with any subsequent paint, roofing, coating, or flooring specified. Nonpigmented compound shall contain a fugitive dye and shall have the reflective requirements in ASTM C 309 waived.

2.1.4.2 Burlap

Burlap used for curing shall conform to COE CRD-C 318.

2.1.5 Water

Water for mixing and curing shall be fresh, clean, potable, and free of injurious amounts of oil, acid, salt, or alkali, except that nonpotable water may be used if it meets the requirements of COE CRD-C 400.

2.1.6 Nonshrink Grout

Nonshrink grout shall conform to ASTM C 1107 and shall be a commercial formulation suitable for the application proposed.

2.1.7 Latex Bonding Compound

Latex bonding compound agents for bonding fresh to hardened concrete shall conform to ASTM C 1059.

2.1.8 Epoxy Resin

Epoxy resin for use in repairs shall conform to ASTM C 881, Type III, Grade I or II.

2.2 CONCRETE MIXTURE PROPORTIONING

2.2.1 Quality of Mixture

For each portion of the structure, mixture proportions shall be selected so that the strength and W/C requirements listed in paragraph DESIGN REQUIREMENTS are met.

2.2.2 Nominal Maximum-Size Coarse Aggregate

Nominal maximum-size coarse aggregate shall be 37.5 mm except 19.0 mm (3/4 inch) nominal maximum-size coarse aggregate shall be used when any of the following conditions exist: the narrowest dimension between sides of forms is less than 190 mm, the depth of the slab is less than 100 mm, or the minimum clear spacing between reinforcing is less than 55 mm.

2.2.3 Air Content

Air content as delivered to the forms and as determined by ASTM C 231 shall be between 4 and 7 percent except that when the nominal maximum-size coarse aggregate is 19.0 mm, it shall be between 4-1/2 and 7-1/2 percent.

2.2.4 Slump

The slump shall be determined in accordance with ASTM C 143/C 143M and shall be within the range of 25 mm to 100 mm. Where placement by pump is approved, the slump shall not exceed 150 mm.

2.2.5 Concrete Proportioning

Trial batches and testing requirements for various qualities of concrete specified shall be the responsibility of the Contractor. Samples of aggregates shall be obtained in accordance with the requirements of ASTM D 75. Samples of materials other than aggregate shall be representative of those proposed for the project and shall be accompanied by the manufacturer's test reports indicating compliance with applicable specified requirements. Trial mixtures having proportions, consistencies, and air content suitable for the work shall be made based on methodology described in ACI 211.1, using at least three different water-cement ratios, which will produce a range of strength encompassing those required for the work. The maximum water-cement ratios required in paragraph MAXIMUM WATER-CEMENT RATIO will be converted to a weight ratio of water to cement plus pozzolan by mass, as described in ACI 211.1. If pozzolan is used in the concrete mixture, the minimum pozzolan content shall be 15 percent of the total cementitious material. Trial mixtures shall be proportioned for maximum permitted slump and air content with due consideration to the approved conveying and placement method. The temperature of concrete in each trial batch shall be reported. For each water-cement ratio, at least three test cylinders for each test age shall be made and cured in accordance with ASTM C 192/C 192M. They shall be tested at 7 days and at the design age specified in paragraph DESIGN REQUIREMENTS in accordance with ASTM C 39/C 39M. From these test results, a curve will be plotted showing the relationship between water-cement ratio and strength.

2.2.6 Required Average Compressive Strength

In meeting the strength requirements specified in paragraph CONCRETE STRENGTH, the selected mixture proportion shall produce a required average compressive strength f'cr exceeding the specified strength f'c by the amount indicated below.

2.2.6.1 Average Compressive Strength from Test Records

Where a concrete production facility has test records, a standard deviation shall be established in accordance with the applicable provisions of ACI 214. Test records from which a standard deviation is calculated shall represent materials, quality control procedures, and conditions similar to those expected, shall represent concrete produced to meet a specified strength or strengths (f'c) within 6.89 MPa of that specified for proposed work, and shall consist of at least 30 consecutive tests. A strength test shall be the average of the strengths of two cylinders made from the same sample of concrete and tested at 28 days or at another test age designated for determination of f'c.

Required average compressive strength f'cr used as the basis for selection of concrete proportions shall be the larger of the equations that follow using the standard deviation as determined above:

$$f'cr = f'c + 1.34S$$
$$f'cr = f'c + 2.33S - 3.45$$

Where S = standard deviation

Where a concrete production facility does not have test records meeting the requirements above but does have a record based on 15 to 29 consecutive tests, a standard deviation shall be established as the product of the calculated standard deviation and a modification factor from the following table:

NUMBER OF TESTS*	MODIFICATION FACTOR FOR STANDARD DEVIATION Use tabulation in paragraph DETERMINING REQUIRED AVERAGE STRENGTH
less than 15	
15	1.16
20	1.08
25	1.03
30 or more	1.00

*Interpolate for intermediate numbers of tests.

2.2.6.2 Average Compressive Strength without Previous Test Records

When a concrete production facility does not have sufficient field strength test records for calculation of the standard deviation, the required average strength fcr shall be determined as follows:

If the specified compressive strength f'c is less than 20.7 MPa,

$$f'cr = f'c + 6.89$$

If the specified compressive strength f'c is 20.7 to 34.5 MPa,

$$f'cr = f'c + 8.27$$

If the specified compressive strength f'c is over 34.5 MPa,

$$f'cr = f'c + 9.65$$

PART 3 EXECUTION

3.1 EQUIPMENT

3.1.1 Capacity

The batching, mixing, conveying, and placing equipment shall have a capacity of at least 100 cubic meters per hour.

3.1.2 Batch Plant

Batch plant shall conform to the requirements of NRMCA CPMB 100 and as specified; however, rating plates attached to batch plant equipment are not required.

3.1.2.1 Batching Equipment

The batching controls shall be, semiautomatic. The semiautomatic batching system shall be provided with interlocks such that the discharge device cannot be actuated until the indicated material is within the applicable tolerance. The batching system shall be equipped with an accurate recorder or recorders that meet the requirements of NRMCA CPMB 100. Separate bins or compartments shall be provided for each size group of aggregate and cement, and pozzolan. Aggregates shall be weighed either in separate weigh batchers with individual scales or cumulatively in one weigh batcher on one scale. Aggregate shall not be weighed in the same batcher with cement or pozzolan. If both cement and pozzolan are used, they may be batched cumulatively provided that the portland cement is batched first. If measured by mass, the mass of the water shall not be weighed cumulatively with another ingredient. Water batcher filling and discharging valves shall be so interlocked that the discharge valve cannot be opened before the filling valve is fully closed. An accurate mechanical device for measuring and dispensing each admixture shall be provided. Each dispenser shall be interlocked with the batching and discharging operation of the water so that each admixture is separately batched and discharged automatically in a manner to obtain uniform distribution throughout the batch in the specified mixing period. Admixtures shall not be combined prior to introduction in water. The plant shall be arranged so as to facilitate the inspection of all operations at all times. Suitable facilities shall be provided for obtaining representative samples of aggregates from each bin or compartment. All filling ports for cementitious materials bins or silos shall be clearly marked with a permanent sign stating the contents.

3.1.2.2 Scales

The equipment for batching by mass shall conform to the applicable requirements of NIST HB 44, except that the accuracy shall be plus or minus 0.2 percent of scale capacity. The Contractor shall provide standard test weights and any other auxiliary equipment required for checking the operating performance of each scale or other measuring devices. Tests shall be made at the frequency required in paragraph TESTS AND INSPECTIONS,

and in the presence of a government inspector.

3.1.2.3 Batching Tolerances

a. Weighing Tolerances

MATERIAL	PERCENT OF REQUIRED MASS
Cementitious materials	0 to plus 2
Aggregate	plus or minus 2
Water	plus or minus 1
Chemical admixture	0 to plus 6

b. Volumetric Tolerances - For volumetric batching equipment, the following tolerances shall apply to the required volume of material being batched:

Water: ..... Plus or minus 1 percent.
Chemical admixtures: ..... Zero to plus 6 percent.

3.1.2.4 Moisture Control

The plant shall be capable of ready adjustment to compensate for the varying moisture content of the aggregates and to change the masses of the materials being batched. An electric moisture meter complying with the provisions of COE CRD-C 143 shall be provided for measuring moisture in the fine aggregate. The sensing element shall be arranged so that the measurement is made near the batcher charging gate of the sand bin or in the sand batcher.

3.1.3 Concrete Mixers

The concrete mixers shall not be charged in excess of the capacity recommended by the manufacturer. The mixers shall be operated at the drum or mixing blade speed designated by the manufacturer. The mixers shall be maintained in satisfactory operating condition, and the mixer drums shall be kept free of hardened concrete. Should any mixer at any time produce unsatisfactory results, its use shall be promptly discontinued until it is repaired.

3.1.3.1 Stationary Mixers

Concrete plant mixers shall be tilting, nontilting, horizontal-shaft, vertical-shaft, or pugmill and shall be provided with an acceptable device to lock the discharge mechanism until the required mixing time has elapsed. The mixing time and uniformity shall conform to all the requirements in ASTM C 94/C 94M applicable to central-mixed concrete.

3.1.3.2 Truck Mixers

Truck mixers, the mixing of concrete therein, and concrete uniformity shall conform to the requirements of ASTM C 94/C 94M. A truck mixer may be used either for complete mixing (transit-mixed) or to finish the partial mixing done in a stationary mixer (shrink-mixed). Each truck shall be equipped

with two counters from which it will be possible to determine the number of revolutions at mixing speed and the number of revolutions at agitating speed.

3.1.4 Conveying Equipment

The conveying equipment shall conform to the following requirements.

3.1.4.1 Buckets

The interior hopper slope shall be not less than 58 degrees from the horizontal, the minimum dimension of the clear gate opening shall be at least five times the nominal maximum-size aggregate, and the area of the gate opening shall not be less than 0.2 square meter. The maximum dimension of the gate opening shall not be greater than twice the minimum dimension. The bucket gates shall be essentially grout tight when closed and may be manually, pneumatically, or hydraulically operated except that buckets larger than 1.5 cubic meters shall not be manually operated. The design of the bucket shall provide means for positive regulation of the amount and rate of deposit of concrete in each dumping position.

3.1.4.2 Transfer Hoppers

Concrete may be charged into nonagitating hoppers for transfer to other conveying devices. Transfer hoppers shall be capable of receiving concrete directly from delivery vehicles and have conical-shaped discharge features. The transfer hopper shall be equipped with a hydraulically operated gate and with a means of external vibration to effect complete discharge. Concrete shall not be held in nonagitating transfer hoppers more than 30 minutes.

3.1.4.3 Trucks

Truck mixers operating at agitating speed or truck agitators used for transporting plant-mixed concrete shall conform to the requirements of ASTM C 94/C 94M. Nonagitating equipment may be used for transporting plant-mixed concrete over a smooth road when the hauling time is less than 15 minutes. Bodies of nonagitating equipment shall be smooth, watertight, metal containers specifically designed to transport concrete, shaped with rounded corners to minimize segregation, and equipped with gates that will permit positive control of the discharge of the concrete.

3.1.4.4 Chutes

When concrete can be placed directly from a truck mixer, agitator, or nonagitating equipment, the chutes attached to this equipment by the manufacturer may be used. A discharge deflector shall be used when required by the Contracting Officer. Separate chutes and other similar equipment will not be permitted for conveying concrete.

3.1.4.5 Belt Conveyors

Belt conveyors shall be designed and operated to assure a uniform flow of concrete from mixer to final place of deposit without segregation of

ingredients or loss of mortar and shall be provided with positive means for preventing segregation of the concrete at the transfer points and the point of placing. Belt conveyors shall be constructed such that the idler spacing shall not exceed 900 mm. The belt speed shall be a minimum of 90 m per minute and a maximum of 230 m per minute. If concrete is to be placed through installed horizontal or sloping reinforcing bars, the conveyor shall discharge concrete into a pipe or elephant trunk that is long enough to extend through the reinforcing bars.

3.1.4.6 Concrete Pumps

Concrete may be conveyed by positive displacement pump when approved. The pumping equipment shall be piston or squeeze pressure. The pipeline shall be rigid steel pipe or heavy-duty flexible hose. The inside diameter of the pipe shall be at least three times the nominal maximum-size coarse aggregate in the concrete mixture to be pumped but not less than 100 mm. Aluminum pipe shall not be used.

3.1.5 Vibrators

Vibrators of the proper size, frequency, and amplitude shall be used for the type of work being performed in conformance with the following requirements:

APPLICATION	HEAD DIAMETER mm	FREQUENCY VPM	AMPLITUDE mm
Thin walls, beams, etc.	32 to 64	9,000 to 13,500	0.5 to 1.0
General construction	50 to 88	8,000 to 12,000	0.6 to 1.2

The frequency and amplitude shall be determined in accordance with COE CRD-C 521.

3.2 PREPARATION FOR PLACING

3.2.1 Embedded Items

Before placement of concrete, care shall be taken to determine that all embedded items are firmly and securely fastened in place as indicated on the drawings, or required. Embedded items shall be free of oil and other foreign matter such as loose coatings or rust, paint, and scale. The embedding of wood in concrete will be permitted only when specifically authorized or directed. Voids in sleeves, inserts, and anchor slots shall be filled temporarily with readily removable materials to prevent the entry of concrete into voids. Welding, including tack welding, will not be permitted on embedded metals within 600 mm of the surface of the concrete.

3.2.2 Concrete on Earth Foundations

Earth surfaces upon which concrete is to be placed shall be clean, damp, and free from debris, frost, ice, and standing or running water. Prior to placement of concrete, the earth foundation shall have been satisfactorily compacted in accordance with Section 02300 EARTHWORK.

3.2.3 Concrete on Rock Foundations

Rock surfaces upon which concrete is to be placed shall be clean, free from oil, standing or running water, ice, mud, drummy rock, coating, debris, and loose, semidetached, or unsound fragments. Joints in rock shall be cleaned to a satisfactory depth, as determined by the Contracting Officer, and to firm rock on the sides. Immediately before the concrete is placed, all rock surfaces shall be cleaned thoroughly by the use of air-water jets or sandblasting as described in paragraph CONSTRUCTION JOINT TREATMENT. All rock surfaces shall be kept continuously wet for at least 24 hours immediately prior to placing concrete thereon. All approximately horizontal surfaces shall be covered, immediately before the concrete is placed, with a layer of mortar proportioned similar to that in the concrete mixture. The mortar shall be covered with concrete before the time of initial setting of the mortar.

3.2.4 Construction Joint Treatment

Construction joint treatment shall conform to the following requirements.

3.2.4.1 Joint Preparation

Concrete surfaces to which additional concrete is to be bonded shall be prepared for receiving the next lift or adjacent concrete by cleaning with either air-water cutting, sandblasting, high-pressure water jet, or other approved method. Air-water cutting will not be permitted on formed surfaces or surfaces congested with reinforcing steel. Regardless of the method used, the resulting surfaces shall be free from all laitance and inferior concrete so that clean, well bonded coarse aggregate is exposed uniformly throughout the lift surface. The edges of the coarse aggregate shall not be undercut. The surface shall be washed clean again as the last operation prior to placing the next lift. There shall be no standing water on the surface upon which concrete is placed.

3.2.4.2 Air-Water Cutting

Air-water cutting of a construction joint shall be performed at the proper time and only on horizontal construction joints. The air pressure used in the jet shall be 620 to 760 kPa, and the water pressure shall be just sufficient to bring the water into effective influence of the air pressure. When approved by the Contracting Officer, a retarder complying with the requirements of COE CRD-C 94 may be applied to the surface of the lift to prolong the period of time during which air-water cutting is effective. Prior to receiving approval, the Contractor shall furnish samples of the material to be used and shall demonstrate the method to be used in applications. After cutting, the surface shall be washed and rinsed as long as there is any trace of cloudiness of the wash water. Where necessary to remove accumulated laitance, coatings, stains, debris, and other foreign material, high-pressure water jet or sandblasting will be required as the last operation before placing the next lift.

3.2.4.3 High-Pressure Water Jet

A stream of water under a pressure of not less than 20.7 MPa may be used for cleaning. Its use shall be delayed until the concrete is sufficiently hard so that only the surface skin or mortar is removed and there is no undercutting of coarse-aggregate particles. If the water jet is incapable of a satisfactory cleaning, the surface shall be cleaned by sandblasting.

3.2.4.4 Wet Sandblasting

This method may be used when the concrete has reached sufficient strength to prevent undercutting of the coarse aggregate particles. The surface of the concrete shall then be washed thoroughly to remove all loose materials.

3.2.4.5 Waste Disposal

The method used in disposing of waste water employed in cutting, washing, and rinsing of concrete surfaces shall be such that the waste water does not stain, discolor, or affect exposed surfaces of the structures, or damage the environment of the project area. The method of disposal shall be subject to approval.

3.3 PLACING

3.3.1 Placing Procedures

The surfaces of horizontal construction joints shall be kept continuously wet for the first 12 hours during the 24-hour period prior to placing concrete. Surfaces may be dampened immediately before placement if necessary. Concrete placement will not be permitted when, in the opinion of the Contracting Officer, weather conditions prevent proper placement and consolidation. Concrete shall be deposited as close as possible to its final position in the forms and, in so depositing, there shall be no vertical drop greater than 1.5 m except where suitable equipment is provided to prevent segregation and where specifically authorized. Depositing of the concrete shall be so regulated that it may be effectively consolidated in horizontal layers 600 mm or less in thickness with a minimum of lateral movement. The amount deposited in each location shall be that which can be readily and thoroughly consolidated. Sufficient placing capacity shall be provided so that concrete placement can be kept plastic and free of cold joints while concrete is being placed. Concrete shall be placed by methods that will prevent segregation or loss of ingredients. Any concrete transferred from one conveying device to another shall be passed through a hopper that is conical in shape. The concrete shall not be dropped vertically more than 1.5 m, except where a properly designed and sized elephant truck with rigid drop chute bottom section is provided to prevent segregation and where specifically authorized. In no case will concrete be discharged to free-fall through reinforcing bars.

3.3.2 Placement by Pump

When concrete is to be placed by pump, the nominal maximum-size coarse aggregate shall not be reduced to accommodate the pumps. The distance to be pumped shall not exceed limits recommended by the pump manufacturer. The concrete shall be supplied to the concrete pump continuously. When pumping is completed, concrete remaining in the pipeline shall be ejected

without contamination of concrete in place. After each operation, equipment shall be thoroughly cleaned, and flushing water shall be wasted outside of the forms. Grout used to lubricate the pumping equipment at the beginning of the placement will not be incorporated into the placement.

3.3.3 Time Interval Between Mixing and Placing

Concrete shall be placed within 30 minutes after discharge into nonagitating equipment. When concrete is truck-mixed or when a truck mixer or agitator is used for transporting concrete mixed by a concrete plant mixer, the concrete shall be delivered to the site of the work, and discharge shall be completed within 1-1/2 hours after introduction of the cement to the aggregates. When the length of haul makes it impossible to deliver truck-mixed concrete within these time limits, batching of cement and a portion of the mixing water shall be delayed until the truck mixer is at or near the construction site.

3.3.4 Cold-Weather Placing

When cold-weather placing of concrete is likely to be subjected to freezing temperatures before the expiration of the curing period, it shall be placed in accordance with procedures previously submitted in accordance with paragraph SUBMITTALS. The ambient temperature of the space adjacent to the concrete placement and surfaces to receive concrete shall be above 0 degrees C. The placing temperature of the concrete having a minimum dimension less than 300 mm shall be between 12 and 24 degrees C when measured in accordance with ASTM C 1064/C 1064M. The placing temperature of the concrete having a minimum dimension greater than 300 mm shall be between 10 and 20 degrees C. Heating of the mixing water or aggregates will be required to regulate the concrete-placing temperatures. Materials entering the mixer shall be free from ice, snow, or frozen lumps. Salt, chemicals, or other materials shall not be mixed with the concrete to prevent freezing.

3.3.5 Hot-Weather Placing

Concrete shall be properly placed and finished with procedures previously submitted in accordance with paragraph SUBMITTALS. The concrete-placing temperature shall not exceed 30 degrees C when measured in accordance with ASTM C 1064/C 1064M. Cooling of the mixing water and aggregates, or both, may be required to obtain an adequate placing temperature. A retarder meeting the requirements of paragraph WATER-REDUCING OR RETARDING ADMIXTURE may be used to facilitate placing and finishing. Steel forms and reinforcement shall be cooled prior to concrete placement when steel temperatures are greater than 50 degrees C. Conveying and placing equipment shall be cooled if necessary to maintain proper concrete-placing temperature.

3.3.6 Consolidation

Immediately after placement, each layer of concrete, including flowing concrete, shall be consolidated by internal vibrating equipment. Vibrators shall not be used to transport concrete within the forms. Hand spading may be required, if necessary, with internal vibrating along formed surfaces

permanently exposed to view. Form or surface vibrators shall not be used unless specifically approved. The vibrator shall be inserted vertically at uniform spacing over the entire area of placement. The distance between insertions shall be approximately 1-1/2 times the radius of action of the vibrator. The vibrator shall penetrate rapidly to the bottom of the layer and at least 150 mm into the preceding unhardened layer if such exists. It shall be held stationary until the concrete is consolidated and then withdrawn slowly.

3.4 FINISHING

The ambient temperature of spaces adjacent to surfaces being finished shall be not less than 5 degrees C. In hot weather when the rate of evaporation of surface moisture, as determined by use of Figure 2.1.5 of ACI 305R, may reasonably be expected to exceed 1.0 kilogram per square meter per hour. Provisions for windbreaks, shading, fog spraying, or wet covering with a light-colored material shall be made in advance of placement, and such protective measures shall be taken as quickly as finishing operations will allow. All unformed surfaces that are not to be covered by additional concrete or backfill shall have a float finish. Additional finishing shall be as specified below and shall be true to the elevation shown in the drawings. Surfaces to receive additional concrete or backfill shall be brought to the elevation shown on the drawings and left true and regular. Exterior surfaces shall be sloped for drainage unless otherwise shown in the drawing or as directed. Joints shall be carefully made with a jointing or edging tool. The finished surfaces shall be protected from stains or abrasions. Grate tampers or jitterbugs shall not be used.

3.4.1 Unformed Surfaces

3.4.1.1 Float Finish

Surfaces shall be screeded and darbied or bullfloated to bring the surface to the required finish level with no coarse aggregate visible. No water, cement, or mortar shall be added to the surface during the finishing operation. The concrete, while still green but sufficiently hardened to bear a man's weight without deep imprint, shall be floated to a true and even plane. Floating may be performed by use of suitable hand floats or power-driven equipment. Hand floats shall be made of magnesium or aluminum.

3.4.1.2 Trowel Finish

A trowel finish shall be applied to the top of channel walls. Concrete surfaces shall be finished with a float finish, and after surface moisture has disappeared, the surface shall be troweled to a smooth, even, dense finish free from blemishes including trowel marks.

3.4.1.3 Broom Finish

A broom finish shall be applied to the face and surfaces of concrete channel inverts, and sidewalls. The concrete surface shall be screeded and floated finish plane with no coarse aggregate visible. After surface moisture disappears, the surface shall be broomed or brushed screeded and fine hair-broom or fiber bristle brushed in a direction transverse to that

of the channel centerline for all invert side slope areas, or as directed.

3.4.2 Formed Surfaces

Unless another finish is specified, surfaces shall be left with the texture imparted by the forms except that defective surfaces shall be repaired as described in paragraph FORMED SURFACE REPAIR.

Uniform color of the concrete shall be maintained by use of only one mixture without changes in materials or proportions for any structure or portion of structure that is exposed to view or on which a special finish is required. The form panels used to produce the finish shall be orderly in arrangement. Forms shall not be reused if there is any evidence of surface wear or defects that would impair the quality of the surface.

3.4.3 Formed Surface Repair

After removal of forms, all ridges, lips, and bulges on surfaces permanently exposed shall be removed. All repairs shall be completed within 48 hours after form removal.

3.4.3.1 Class A Finishes

Surfaces listed in Section 03101 FORMWORK FOR CONCRETE and as shown to have class A finishes shall have surface defects repaired as follows: defective areas, voids, and honeycombs smaller than 10 000 square millimeters in area and less than 13 mm deep and bug holes exceeding 13 mm in diameter shall be chipped and filled with dry-packed mortar. Holes left by removal of tie rods shall be reamed and filled with dry-packed mortar as specified in paragraph MATERIAL AND PROCEDURE FOR REPAIRS. Defective and unsound concrete areas larger than described shall be defined by 13 mm deep dovetailed saw cuts in a rectangular pattern with lines parallel to the formwork, the defective concrete removed by chipping, and the void repaired with replacement concrete. The prepared area shall be brush-coated with an epoxy resin meeting the requirements of paragraph EPOXY RESIN, a latex bonding agent meeting the requirements of paragraph LATEX BONDING COMPOUND, or a neat cement grout after dampening the area with water. The void shall be filled with replacement concrete in accordance with paragraph MATERIAL AND PROCEDURE FOR REPAIRS.

3.4.3.2 Class D Finish

Surfaces listed in Section 03101 FORMWORK FOR CONCRETE and as shown to have class D finish shall have surface defects repaired as follows: defective areas, voids, and honeycombs greater than 30 000 square millimeters in area or more than 50 mm deep shall be defined by 13 mm deep dovetailed saw cuts in a rectangular pattern, the defective concrete removed by chipping and the void repaired with replacement concrete. The prepared area shall be brush-coated with an epoxy resin meeting the requirements of paragraph EPOXY RESIN, a latex bonding agent meeting the requirements of paragraph LATEX BONDING COMPOUND, or a neat cement grout after dampening the area with water. The void shall be filled with replacement concrete in accordance with paragraph MATERIAL AND PROCEDURE FOR REPAIRS.

3.4.3.3 Material and Procedure for Repairs

The cement used in the dry-packed mortar or replacement concrete shall be a blend of the cement used for production of project concrete and white portland cement properly proportioned so that the final color of the mortar or concrete will match adjacent concrete. Trial batches shall be used to determine the proportions required to match colors. Dry-packed mortar shall consist of one part cement to two and one-half parts fine aggregate. The fine aggregate shall be that used for production of project concrete. The mortar shall be remixed over a period of at least 30 minutes without addition of water until it obtains the stiffest consistency that will permit placing. Mortar shall be thoroughly compacted into the prepared void by tamping, rodding, ramming, etc. and struck off to match adjacent concrete. Replacement concrete shall be produced using project materials and shall be proportioned by the Contracting Officer. It shall be thoroughly compacted into the prepared void by internal vibration, tamping, rodding, ramming, etc. and shall be struck off and finished to match adjacent concrete. Forms shall be used to confine the concrete. If an expanding agent is used in the repair concrete, the repair shall be thoroughly confined on all sides including the top surface. Metal tools shall not be used to finish permanently exposed surfaces. The repaired areas shall be cured for 7 days. The temperature of the in situ concrete, adjacent air, and replacement mortar or concrete shall be above 5 degrees C during placement, finishing, and curing. Other methods and materials for repair may be used only when approved in writing by the Contracting Officer. Repairs of the so called "plaster-type" will not be permitted.

3.5 CURING AND PROTECTION

3.5.1 Duration

Concrete shall be cured by an approved method for a period of 7 days.

Immediately after placement, concrete shall be protected from premature drying, extremes in temperatures, rapid temperature change, and mechanical damage. All materials and equipment needed for adequate curing and protection shall be available and at the placement site prior to the start of concrete placement. Concrete shall be protected from the damaging effects of rain for 12 hours and from flowing water for 14 days. No fire or excessive heat including welding shall be permitted near or in direct contact with concrete or concrete embedments at any time.
Text

3.5.2 Moist Curing

Moist-cured concrete shall be maintained continuously, not periodically, wet for the entire curing period. If water or curing materials stain or discolor concrete surfaces that are to be permanently exposed, they shall be cleaned as required in paragraph APPEARANCE. Where wooden form sheathing is left in place during curing, the sheathing shall be kept wet at all times. Where steel forms are left in place during curing, the forms shall be carefully broken loose from the hardened concrete and curing water continuously applied into the void so as to continuously saturate the entire concrete surface. Horizontal surfaces may be moist cured by

ponding, by covering with a minimum uniform thickness of 50 mm of continuously saturated sand, or by covering with saturated nonstaining burlap or cotton mats. Horizontal construction joints may be allowed to dry for 12 hours immediately prior to the placing of the following lift.

3.5.3 Membrane-Forming Curing Compound

Concrete may be cured with an approved membrane-forming curing compound in lieu of moist curing except that membrane curing will not be permitted on any surface containing protruding steel reinforcement.

3.5.3.1 Pigmented Curing Compound

A pigmented curing compound meeting the requirements of the above paragraph MEMBRANE-FORMING CURING COMPOUND may be used on surfaces that will not be exposed to view when the project is completed.

3.5.3.2 Nonpigmented Curing Compound

A nonpigmented curing compound containing a fugitive dye may be used on surfaces that will be exposed to view when the project is completed. Concrete cured with nonpigmented curing compound must be shaded from the sun for the first 3 days when the ambient temperature is 32 degrees C or higher.

3.5.3.3 Application

The curing compound shall be applied to formed surfaces immediately after the forms are removed and prior to any patching or other surface treatment except the cleaning of loose sand, mortar, and debris from the surface. The surfaces shall be thoroughly moistened with water, and the curing compound applied as soon as free water disappears. The curing compound shall be applied to unformed surfaces as soon as free water has disappeared and bleeding has stopped. The curing compound shall be applied in a two-coat continuous operation by approved motorized power-spraying equipment operating at a minimum pressure of 500 kPa, at a uniform coverage of not more than 10 square meters per liter for each coat, and the second coat shall be applied perpendicular to the first coat. Concrete surfaces that have been subjected to rainfall within 3 hours after curing compound has been applied shall be resprayed by the method and at the coverage specified. All concrete surfaces on which the curing compound has been applied shall be adequately protected for the duration of the entire curing period from pedestrian and vehicular traffic and from any other cause that will disrupt the continuity of the curing membrane.

3.5.4 Evaporation Retardant

Sheet curing shall not be used on vertical or near-vertical surfaces. All surfaces shall be thoroughly wetted and be completely covered with waterproof paper or polyethylene-coated burlap having the burlap thoroughly water-saturated before placing. Covering shall be laid with light-colored side up. Covering shall be lapped not less than 300 mm and securely weighted down or shall be lapped not less than 100 mm and taped to form a continuous cover with completely closed joints. The sheet shall be

weighted to prevent displacement so that it remains in contact with the concrete during the specified length of curing. Coverings shall be folded down over exposed edges of slabs and secured by approved means. Sheets shall be immediately repaired or replaced if tears or holes appear during the curing period.

3.5.5 Cold-Weather Curing and Protection

When the daily outdoor low temperature is less than 0 degrees C, the temperature of the concrete shall be maintained above 5 degrees C for the first 7 days after placing. In addition, during the period of protection removal, the air temperature adjacent to the concrete surfaces shall be controlled so that concrete near the surface will not be subjected to a temperature differential of more than 15 degrees C as determined by observation of ambient and concrete temperatures indicated by suitable temperatures measuring devices furnished by the Government as required and installed adjacent to the concrete surface and 50 mm inside the surface of the concrete. The installation of the thermometers shall be made by the Contractor at such locations as may be directed.

3.6 SETTING OF POSTS, BASE PLATES, AND BEARING PLATES

3.6.1 Setting of Posts and Plates

After being plumbed and properly positioned, posts, column base plates, bearing plates for beams and similar structural members, and machinery and equipment base plates shall be provided with full bearing with nonshrink grout. The space between the top of concrete or masonry-bearing surface and the bottom of the plate shall be approximately 1/24 of the width of the plate, but not less than 13 mm for plates less than 300 mm wide. Concrete surfaces shall be rough, clean, and free of oil, grease, and laitance, and they shall be damp. Metal surfaces shall be clean and free of oil, grease, and rust.

3.6.2 Nonshrink Grout Application

Nonshrink grout shall conform to the requirements of paragraph NONSHRINK GROUT. Water content shall be the minimum that will provide a flowable mixture and fill the space to be grouted without segregation, bleeding, or reduction of strength.

3.6.2.1 Mixing and Placing of Nonshrink Grout

Mixing and placing shall be in conformance with the material manufacturer's instructions and as specified. Ingredients shall be thoroughly dry-mixed before adding water. After adding water, the batch shall be mixed for 3 minutes. Batches shall be of size to allow continuous placement of freshly mixed grout. Grout not used within 30 minutes after mixing shall be discarded. The space between the top of the concrete or masonry-bearing surface and the plate shall be filled solid with the grout. Forms shall be of wood or other equally suitable material for retaining the grout and shall be removed after the grout has set. If grade "A" grout as specified in ASTM C 1107 is used, all surfaces shall be formed to provide restraint. The placed grout shall be worked to eliminate voids; however, overworking

and breakdown of the initial set shall be avoided. Grout shall not be retempered or subjected to vibration from any source. Where clearances are unusually small, placement shall be under pressure with a grout pump. Temperature of the grout, and of surfaces receiving the grout, shall be maintained at 20 to 30 degrees C until after setting.

3.6.2.2 Treatment of Exposed Surfaces

After the grout has set, those types containing metallic aggregate shall have the exposed surfaces cut back 25 mm and immediately covered with a parge coat of mortar proportioned by mass of one part portland cement, two parts sand, and sufficient water to make the mixture placeable. The parge coat shall have a smooth, dense finish. The exposed surface of other types of nonshrink grout shall have a smooth, dense finish.

3.6.2.3 Curing

Grout and parge coats shall be cured in conformance with paragraph CURING AND PROTECTION.

3.7 TESTS AND INSPECTIONS

Tests and inspections shall conform to the following requirements.

3.7.1 General

The Contractor shall perform the inspections and tests described below, and, based upon the results of these inspections and tests, he shall take the action required and submit reports as required. When, in the opinion of the Contracting Officer, the concreting operation is out of control, concrete placement shall cease. The laboratory performing the tests shall be on site and shall conform with ASTM C 1077. The individuals who sample and test concrete or the constituents of concrete as required in this specification shall have demonstrated a knowledge and ability to perform the necessary test procedures equivalent to the ACI minimum guidelines for certification of Concrete Field Testing Technicians, Grade I. The individuals who perform the inspection of concrete construction shall have demonstrated a knowledge and ability equivalent to the ACI minimum guidelines for certification of Concrete Transportation Construction Inspector (CTCI). The Government will inspect the laboratory, equipment, and test procedures prior to start of concreting operations and at least once per year thereafter for conformance with ASTM C 1077.

3.7.2 Testing and Inspection Requirements

3.7.2.1 Fine Aggregate

a. Grading - At least once during each shift when the concrete plant is operating, there shall be one sieve analysis and fineness modulus determination in accordance with ASTM C 136 and COE CRD-C 104 for the fine aggregate or for each size range of fine aggregate if it is batched in more than one size or classification. The location at which samples are taken may be selected by the Contractor as the most advantageous for control. However, the Contractor is responsible for

delivering fine aggregate to the mixer within specification limits.

b. Corrective Action for Fine Aggregate Grading - When the amount passing on any sieve is outside the specification limits, the fine aggregate shall be immediately resampled and retested. If there is another failure on any sieve, the fact shall immediately be reported to the Contracting Officer.

c. Moisture Content Testing - When in the opinion of the Contracting Officer the electric moisture meter is not operating satisfactorily, there shall be at least four tests for moisture content in accordance with ASTM C 566 during each 8-hour period of mixing plant operation. The times for the tests shall be selected randomly within the 8-hour period. An additional test shall be made whenever the slump is shown to be out of control or excessive variation in workability is reported by the placing foreman. When the electric moisture meter is operating satisfactorily, at least two direct measurements of moisture content shall be made per week to check the calibration of the meter. The results of tests for moisture content shall be used to adjust the added water in the control of the batch plant.

d. Moisture Content Corrective Action - Whenever the moisture content of the fine aggregate changes by 0.5 percent or more, the scale settings for the fine-aggregate batcher and water batcher shall be adjusted (directly or by means of a moisture compensation device) if necessary to maintain the specified slump.

3.7.2.2 Coarse Aggregate

a. Grading - At least once during each shift in which the concrete plant is operating, there shall be a sieve analysis in accordance with ASTM C 136 for each size of coarse aggregate. The location at which samples are taken may be selected by the Contractor as the most advantageous for production control. However, the Contractor shall be responsible for delivering the aggregate to the mixer within specification limits. A test record of samples of aggregate taken at the same locations shall show the results of the current test as well as the average results of the five most recent tests including the current test. The Contractor may adopt limits for control which are coarser than the specification limits for samples taken at locations other than as delivered to the mixer to allow for degradation during handling.

b. Corrective Action for Grading - When the amount passing any sieve is outside the specification limits, the coarse aggregate shall be immediately resampled and retested. If the second sample fails on any sieve, that fact shall be reported to the Contracting Officer. Where two consecutive averages of five tests are outside specification limits, the operation shall be considered out of control and shall be reported to the Contracting Officer. Concreting shall be stopped and immediate steps shall be taken to correct the grading.

c. Coarse Aggregate Moisture Content - A test for moisture content of each size group of coarse aggregate shall be made at least twice per

week. When two consecutive readings for smallest size coarse aggregate differ by more than 1.0 percent, frequency of testing shall be increased to that specified above for fine aggregate, until the difference falls below 1.0 percent.

d. Coarse Aggregate Moisture Corrective Action - Whenever the moisture content of any size of coarse aggregate changes by 0.5 percent or more, the scale setting for the coarse aggregate batcher and the water batcher shall be adjusted if necessary to maintain the specified slump.

3.7.2.3 Quality of Aggregates

a. Frequency of Quality Tests - Thirty days prior to the start of concrete placement the Contractor shall perform all tests for aggregate quality listed below. In addition, after the start of concrete placement, the Contractor shall perform tests for aggregate quality in accordance with the frequency schedule shown below. Samples tested after the start of concrete placement shall be taken immediately prior to entering the concrete mixer.

PROPERTY	FREQUENCY FINE AGGREGATE	FREQUENCY COARSE AGGREGATE	TEST
Specific Gravity	Every 3 months	Every 3 months	ASTM C 127 ASTM C 128
Absorption	Every 3 months	Every 3 months	ASTM C 127 ASTM C 128
Impurities	Every 3 months	Not applicable	ASTM C 40 ASTM C 87

b. Corrective Action for Aggregate Quality - If the result of a quality test fails to meet the requirements for quality immediately prior to start of concrete placement, production procedures or materials shall be changed and additional tests shall be performed until the material meets the quality requirements prior to proceeding with either mixture proportioning studies or starting concrete placement. After concrete placement commences, whenever the result of a test for quality fails the requirements, the test shall be rerun immediately. If the second test fails the quality requirement, the fact shall be reported to the Contracting Officer and immediate steps taken to rectify the situation.

3.7.2.4 Scales

a. Weighing Accuracy - The accuracy of the scales shall be checked by test weights prior to start of concrete operations and at least once every 3 months for conformance with the applicable requirements of paragraph BATCHING EQUIPMENT. Such tests shall also be made as directed whenever there are variations in properties of the fresh concrete that could result from batching errors.

b. Batching and Recording Accuracy - Once a week the accuracy of each batching and recording device shall be checked during a weighing operation by noting and recording the required weight, recorded weight, and the actual weight batched. The Contractor shall confirm that the calibration devices described in paragraph BATCH PLANT for checking the accuracy of dispensed admixtures are operating properly.

c. Scales Corrective Action - When either the weighing accuracy or batching accuracy does not comply with specification requirements, the plant shall not be operated until necessary adjustments or repairs have been made. Discrepancies in recording accuracies shall be corrected immediately.

3.7.2.5 Batch-Plant Control

The measurement of all constituent materials including cementitious materials, each size of aggregate, water, and admixtures shall be continuously controlled. The aggregate weights and amount of added water shall be adjusted as necessary to compensate for free moisture in the aggregates. The amount of air-entraining agent shall be adjusted to control air content within specified limits. A report shall be prepared indicating type and source of cement used, type and source of pozzolan or slag used, amount and source of admixtures used, aggregate source, the required aggregate and water weights per cubicmeter, amount of water as free moisture in each size of aggregate, and the batch aggregate and water weights per cubic meter for each class of concrete batched during plant operation.

3.7.2.6 Concrete Mixture

a. Air Content Testing - Air content tests shall be made when test specimens are fabricated. In addition, at least two tests for air content shall be made on randomly selected batches of each separate concrete mixture produced during each 8-hour period of concrete production. Additional tests shall be made when excessive variation in workability is reported by the placing foreman or Government quality assurance representative. Tests shall be made in accordance with ASTM C 231. Test results shall be plotted on control charts which shall at all times be readily available to the Government. Copies of the current control charts shall be kept in the field by the Contractor's quality control representatives and results plotted as tests are made. When a single test result reaches either the upper or lower action limit a second test shall immediately be made. The results of the two tests shall be averaged and this average used as the air content of the batch to plot on both the control chart for air content and the control chart for range, and for determining the need for any remedial action. The result of each test, or average as noted in the previous sentence, shall be plotted on a separate chart for each mixture on which an "average line" is set at the midpoint of the specified air content range from paragraph AIR CONTENT. An upper warning limit and a lower warning limit line shall be set 1.0 percentage point above and below the average line. An upper action limit and a lower action limit line shall be set 1.5 percentage points above and below the average line, respectively. The range between each two consecutive tests shall be

plotted on a control chart for range where an upper warning limit is set at 2.0 percentage points and up upper action limit is set at 3.0 percentage points. Samples for air content may be taken at the mixer, however, the Contractor is responsible for delivering the concrete to the placement site at the stipulated air content. If the Contractor's materials or transportation methods cause air content loss between the mixer and the placement, correlation samples shall be taken at the placement site as required by the Contracting Officer and the air content at the mixer controlled as directed.

b. Air Content Corrective Action - Whenever points on the control chart for percent air reach either warning limit, an adjustment shall immediately be made in the amount of air-entraining admixture batched. As soon as is practical after each adjustment, another test shall be made to verify the result of the adjustment. Whenever a point on the control chart range reaches the warning limit, the admixture dispenser shall be recalibrated to ensure that it is operating accurately and with good reproducibility. Whenever a point on either control chart reaches an action limit line, the air content shall be considered out of control and the concreting operation shall immediately be halted until the air content is under control. Additional air content tests shall be made when concreting is restarted. All this shall be at no extra cost to the Government.

c. Slump Testing - In addition to slump tests which shall be made when test specimens are fabricated, at least four slump tests shall be made on randomly selected batches in accordance with ASTM C 143/C 143M for each separate concrete mixture produced during each 8-hour or less period of concrete production each day. Also, additional tests shall be made when excessive variation in workability is reported by the placing foreman or Government's quality assurance representative. Test results shall be plotted on control charts which shall at all times be readily available to the Government. Copies of the current control charts shall be kept in the field by the Contractor's quality control representatives and results plotted as tests are made. When a single slump test reaches or goes beyond either the upper or lower action limit, a second test shall immediately be made on the same batch of concrete. The results of the two tests shall be averaged and this average used as the slump of the batch to plot on both the control chart for percent air and the chart for range, and for determining the need for any remedial action. An upper warning limit shall be set at 13 mm below the maximum allowable slump on separate control charts for percent air used for each type of mixture as specified in paragraph SLUMP, and an upper action limit line and lower action limit line shall be set at the maximum and minimum allowable slumps, respectively, as specified in the same paragraph. The range between each consecutive slump test for each type of mixture shall be plotted on a single control chart for range on which an upper action limit is set at 50 mm. Samples for slump shall be taken at the mixer, however, the Contractor is responsible for delivering the concrete to the placement site at the stipulated slump. If the Contractor's materials or transportation methods cause slump loss between mixer and the placement, correlation samples shall be taken at the placement site as required by the Contracting Officer and the slump at the mixer controlled as directed.

d. Slump Corrective Action - Whenever points on the control chart for slump reach the upper warning limit, an adjustment shall be immediately made in the batch weights of water and fine aggregate. The adjustments are to be made so that the total water content does not exceed that amount allowed by the maximum W/C specified, based upon aggregates which are in a saturated surface-dry condition. When a single slump reaches the upper or lower action limit, no further concrete shall be delivered to the placing site until proper adjustments have been made. Immediately after each adjustment, another test shall be made to verify the correctness of the adjustment. Whenever two consecutive slump tests, made during a period when there was no adjustment of batch weights, produce a point on the control chart for range at or above the upper action limit, the concreting operation shall immediately be halted and the Contractor shall take appropriate steps to bring the slump under control. Also, additional slump tests shall be made as directed. All this shall be at no additional cost to the Government.

e. Temperature - The temperature of the concrete shall be measured when compressive strength specimens are fabricated. Measurement shall be in accordance with ASTM C 1064/C 1064M. The temperature shall be reported along with the compressive strength data.

f. Compressive-Strength Specimens - At least one set of test specimens shall be made each day on each different concrete mixture placed during the day. Additional sets of test cylinders shall be made, as directed by the Contracting Officer, when the mixture proportions are changed or when low strengths have been detected. A random sampling plan shall be developed by the Contractor and approved by the Contracting Officer prior to the start of construction. The plan shall assure that sampling is done in a completely random and unbiased manner. A set of test specimens for concrete with a 28-day specified strength per paragraph DESIGN REQUIREMENTS shall consist of four cylinders, two to be tested at 7 days and two at 28 days. A set of test specimens for concrete with a 90-day strength per specified paragraph DESIGN REQUIREMENTS shall consist of six cylinders, two tested at 7 days, two at 28 days, and two at 90 days. Test specimens shall be molded and cured in accordance with ASTM C 31/C 31M and tested in accordance with ASTM C 39/C 39M. All compressive-strength tests shall be reported immediately to the Contracting Officer. Quality control charts shall be kept for individual strength tests, moving average for strength, and moving average for range for each mixture. The charts shall be similar to those found in ACI 214.

3.7.2.7 Inspection Before Placing

Foundation or construction joints, forms, and embedded items shall be inspected for quality by the Contractor in sufficient time prior to each concrete placement to certify to the Contracting Officer that they are ready to receive concrete. The results of each inspection shall be reported in writing.

3.7.2.8 Placing

a. Placing Inspection - The placing foreman shall supervise all placing operations, shall determine that the correct quality of concrete or grout is placed in each location as directed and shall be responsible for measuring and recording concrete temperatures and ambient temperature hourly during placing operations, weather conditions, time of placement, yardage placed, and method of placement.

b. Placing Corrective Action - The placing foreman shall not permit batching and placing to begin until he has verified that an adequate number of vibrators in working order and with competent operators are available. Placing shall not be continued if any pile of concrete is inadequately consolidated. If any batch of concrete fails to meet the temperature requirements, immediate steps shall be taken to improve temperature controls.

3.7.2.9 Vibrators

a. Vibrator Testing and Use - The frequency and amplitude of each vibrator shall be determined in accordance with COE CRD-C 521 prior to initial use and at least once a month when concrete is being placed. Additional tests shall be made as directed when a vibrator does not appear to be adequately consolidating the concrete. The frequency shall be determined at the same time the vibrator is operating in concrete with the tachometer held against the upper end of the vibrator head while almost submerged and just before the vibrator is withdrawn from the concrete. The amplitude shall be determined with the head vibrating in air. Two measurements shall be taken, one near the tip and another near the upper end of the vibrator head and these results averaged. The make, model, type, and size of the vibrator and frequency and amplitude results shall be reported in writing.

b. Vibrator Corrective Action - Any vibrator not meeting the requirements of paragraph VIBRATORS shall be immediately removed from service and repaired or replaced.

3.7.2.10 Curing

a. Moist-Curing Inspections - At least once each shift, and once per day on nonwork days an inspection shall be made of all areas subject to moist curing. The surface moisture condition shall be noted and recorded.

b. Moist-Curing Corrective Action - When a daily inspection report lists an area of inadequate curing, immediate corrective action shall be taken, and the required curing period for such areas shall be extended by one (1) day.

c. Membrane-Curing Inspection - No curing compound shall be applied until the Contractor's authorized representative has verified that the compound is properly mixed and ready for spraying. At the end of each operation, he shall estimate the quantity of compound used by measurement of the container and the area of concrete surface covered and compute the rate of coverage in square meters per liter. He shall note whether or not coverage is uniform.

d. Membrane-Curing Corrective Action - When the coverage rate of the curing compound is less than that specified or when the coverage is not uniform, the entire surface shall be sprayed again.

e. Sheet-Curing Inspection - At least once each shift and once per day on nonwork days, an inspection shall be made of all areas being cured using material sheets. The condition of the covering and the tightness of the laps and tapes shall be noted and recorded.

f. Sheet-Curing Corrective Action - When a daily inspection report lists any tears, holes, or laps or joints that are not completely closed, the tears and holes shall promptly be repaired or the sheets replaced, the joints closed, and the required curing period for those areas shall be extended by one (1) day.

3.7.2.11 Cold-Weather Protection and Sealed Insulation Curing

At least once each shift and once per day on nonwork days, an inspection shall be made of all areas subject to cold-weather protection. The protection system shall be inspected for holes, tears, unsealed joints, or other deficiencies that could result in damage to the concrete. Special attention shall be taken at edges, corners, and thin sections. Any deficiencies shall be noted, corrected, and reported.

3.7.2.12 Cold-Weather Protection Corrective Action

When a daily inspection report lists any holes, tears, unsealed joints, or other deficiencies, the deficiency shall be corrected immediately and the period of protection extended 1 day.

3.7.2.13 Mixer Uniformity

a. Stationary Mixers - Prior to the start of concrete placing and once every 6 months when concrete is being placed, or once for every 57 000 cubic meters of concrete placed, whichever results in the longest time interval, uniformity of concrete mixing shall be determined in accordance with ASTM C 94/C 94M.

b. Truck Mixers - Prior to the start of concrete placing and at least once every 6 months when concrete is being placed, uniformity of concrete shall be determined in accordance with ASTM C 94/C 94M. The truck mixers shall be selected randomly for testing. When satisfactory performance is found in one truck mixer, the performance of mixers of substantially the same design and condition of the blades may be regarded as satisfactory.

3.7.2.14 Mixer Uniformity Corrective Action

When a mixer fails to meet mixer uniformity requirements, either the mixer shall be removed from service on the work, the mixing time shall be increased, batching sequence changed, batch size reduced, or adjustments shall be made to the mixer until compliance is achieved.

3.7.3 Reports

All results of tests or inspections conducted shall be reported informally as they are completed and in writing daily. A weekly report shall be prepared for the updating of control charts covering the entire period from the start of the construction season through the current week. During periods of cold-weather protection, reports of pertinent temperatures shall be made daily. These requirements do not relieve the Contractor of the obligation to report certain failures immediately as required in preceding paragraphs. Such reports of failures and the action taken shall be confirmed in writing in the routine reports. The Contracting Officer has the right to examine all test and inspection records.

-- End of Section --

SECTION TABLE OF CONTENTS

DIVISION 05 - METALS

SECTION 05500

MISCELLANEOUS METAL

PART 1 GENERAL

1.1 REFERENCES
1.2 SUBMITTALS
1.3 GENERAL REQUIREMENTS
1.4 WORKMANSHIP
1.5 ANCHORAGE
1.6 SHOP PAINTING

PART 2 PRODUCTS

2.1 MATERIALS
2.1.1 General
2.1.2 Structural Shapes and Plates
2.1.3 Wall Ladders Rungs (Galvanized)
2.1.4 Corrosion-Resisting Steel Bolts and Anchor Bolts
2.1.5 Bolts
2.1.6 Nuts
2.1.7 Expansion Anchors
2.1.8 Concrete, Mortar and Grout
2.1.9 Steel Pipes
2.1.10 Pipe Caps
2.1.11 Cover Plate
2.1.12 Manhole Frames and Covers
2.1.13 Steel Chain Gate

PART 3 EXECUTION

3.1 GENERAL INSTALLATION REQUIREMENTS
3.2 FINISHING
3.3 ZINC COATING (GALVANIZING)
3.4 WELDING
3.5 BOLTED CONNECTIONS
3.6 EXCAVATION
3.7 PIPE BOLLARDS
3.8 PAINTING
3.9 STILLING WELLS
3.9.1 Steel Cover Plates and Frames

-- End of Section Table of Contents --

SECTION 05500

MISCELLANEOUS METAL

PART 1 GENERAL

1.1 REFERENCES

The publications listed below form a part of this specification to the extent referenced. The publications are referred to in the text by basic designation only.

AMERICAN SOCIETY FOR TESTING AND MATERIALS (ASTM)

ASTM A 36/A 36M	(2000) Carbon Structural Steel
ASTM A 48	(1994ael) Gray Iron Casting
ASTM A 53/A 53M	(1999b) Pipe, Steel, Black and Hot-Dipped, Zinc-Coated, Welded and Seamless
ASTM A 123/A 123M	(2000) Zinc (Hot-Dip Galvanized) Coatings on Iron and Steel Products
ASTM A 320/A 320M	(2000) Alloy Steel Bolting Materials for Low Temperature Service
ASTM A 467/A 467M	(1998) Machine and Coil Chain
ASTM B 32	(1996) Solder Metal
ASTM B 221	(2000) Aluminum and Aluminum-Alloy Extruded Bars, Rods, Wire, Profiles, and Tubes
ASTM B 221M	(2000) Aluminum and Aluminum-Alloy Extruded Bars, Rods, Wire, Profiles, and Tubes (Metric)
ASTM C 478	(1997) Precast Reinforced Concrete Manhole Sections
ASTM C 497	(1997) Concrete Pipe, Manhole Sections, or Tile
ASTM F 593	(1998) Stainless Steel Bolts, Hex Cap Screws, and Studs
ASTM F 594	(1998) Stainless Steel Nuts

AMERICAN SOCIETY OF MECHANICAL ENGINEERS (ASME)

ASME B16.3	(1998) Mallable Iron Threaded Fittings
ASME B18.2.1	(1996) Square and Hex Bolts and Screws (Inch Series)
ASME B18.2.2	(1987; R 1993) Square and Hex Nuts (Inch Series)

AMERICAN WELDING SOCIETY (AWS)

AWS D1.1	(2000) Structural Welding Code - Steel

U.S. GENERAL SERVICES ADMINISTRATION (GSA)

CID A-A-1923	(Rev A) Shield, Expansion (Lag, Machine and Externally Threaded Wedge Bolt Anchors)

DEPARTMENT OF PUBLIC WORKS, CLARK COUNTY, NEVADA

UNIFORM STANDARD DRAWINGS FOR PUBLIC WORKS' CONSTRUCTION OFF-SITE IMPROVEMENTS, CLARK COUNTY AREA NEVADA

NEVADA DEPARTMENT OF TRANSPORTATION

NEVADA DEPARTMENT OF TRANSPORTATION STANDARD PLANS FOR ROAD AND BRIDGE CONSTRUCTION

1.2 SUBMITTALS

Government approval is required for submittals with a "G" designation; submittals not having a "G" designation are for information only. When used, a designation following the "G" designation identifies the office that will review the submittal for the Government. The "RE" designates that the Resident Office will review the submittal for the Government. The following shall be submitted in accordance with Section 01330 SUBMITTAL PROCEDURES:

SD-02 Shop Drawings

Miscellaneous Metal Items; G, RE.

Detail drawings indicating material thickness, type, grade, and class; dimensions; and construction details. Drawings shall include catalog cuts, erection details, manufacturer's descriptive data and installation instructions, and templates. Detail drawings for the stilling well access door, plates and appurtenances.

1.3 GENERAL REQUIREMENTS

The Contractor shall verify all measurements and shall take all field measurements necessary before fabrication. Welding to or on structural steel shall be in accordance with AWS D1.1. Items specified to be galvanized, when practicable and not indicated otherwise, shall be hot-dip

galvanized after fabrication. Galvanizing shall be in accordance with ASTM A 123/A 123M, as applicable. Exposed fastenings shall be compatible materials, shall generally match in color and finish, and shall harmonize with the material to which fastenings are applied. Materials and parts necessary to complete each item, even though such work is not definitely shown or specified, shall be included. Poor matching of holes for fasteners shall be cause for rejection. Thickness of metal and details of assembly and supports shall provide strength and stiffness. Joints exposed to the weather shall be formed to exclude water.

1.4 WORKMANSHIP

Miscellaneous metalwork shall be well formed to shape and size, with sharp lines and angles and true curves. Drilling and punching shall produce clean true lines and surfaces. Welding shall be continuous along the entire area of contact except where tack welding is permitted. Exposed connections of work in place shall not be tack welded. Exposed welds shall be ground smooth. Exposed surfaces of work in place shall have a smooth finish, and unless otherwise approved, exposed riveting shall be flush. Where tight fits are required, joints shall be milled. Corner joints shall be coped or mitered, well formed, and in true alignment. Work shall be accurately set to established lines and elevations and securely fastened in place. Installation shall be in accordance with manufacturer's installation instructions and approved drawings, cuts, and details.

1.5 ANCHORAGE

Anchorage shall be provided where necessary for fastening miscellaneous metal items securely in place. Anchorage not otherwise specified or indicated shall include slotted inserts made to engage with the anchors, expansion shields, and power-driven fasteners when approved for concrete; toggle bolts and through bolts for masonry; machine and carriage bolts for steel; and lag bolts and screws for wood.

1.6 SHOP PAINTING

Surfaces of ferrous metal except galvanized surfaces, shall be cleaned and shop coated with the manufacturer's standard protective coating unless otherwise specified. Surfaces of items to be embedded in concrete shall not be painted. Items to be finish painted shall be prepared according to manufacturer's recommendations or as specified.

PART 2 PRODUCTS

2.1 MATERIALS

2.1.1 General

Materials indicated on the drawings or required in the work and not covered elsewhere by detailed requirements shall conform to the requirements of this section. In all cases not specifically covered in these specifications, the Contractor shall furnish approved highest grade commercial materials or products which are suitable for the intended use of the item.

2.1.2 Structural Shapes and Plates

Steel bars, shapes and plates shall conform to ASTM A 36/A 36M. Galvanized coatings where required, shall conform to ASTM A 123/A 123M.

2.1.3 Wall Ladders Rungs (Galvanized)

Manhole steps shall conform to ASTM C 478 and ASTM C 497. Aluminum steps shall be solid made from material in conformance with ASTM B 221 (Alloy 6005-TS) and with ASTM B 221M. Reinforced plastic steps may only be used in manholes or other locations not exposed to sunlight and shall be polypropylene plastic coated 10 mm deformed steel rod pen ASTM A 36/A 36M. All steps shall be epoxied in place during the installation process.

2.1.4 Corrosion-Resisting Steel Bolts and Anchor Bolts

Corrosion-resisting steel bolts and anchor bolts shall conform to ASTM F 593, or the applicable requirements of ASTM A 320/A 320M, Grade B8.

2.1.5 Bolts

Bolts shall conform to ASME B18.2.2, or the applicable requirements of ASTM A 320/A 320M, Grade B8. The turned eye bolt shall have a 19 mm eye size, leg length of 100 mm and at least 3 mm thick.

2.1.6 Nuts

Nuts shall conform to ASME B18.2.2. Nuts shall be galvanized. Stainless Steel nuts shall conform to ASTM F 594

2.1.7 Expansion Anchors

Expansion anchors shall conform to the applicable requirements of CID A-A-1923. Anchors shall be multiple unit with inside thread.

2.1.8 Concrete, Mortar and Grout

Cast-In-Place Structural Concrete, mortar and grout shall conform to the requirements of Section 03301 CAST-IN-PLACE STRUCTURAL CONCRETE.

2.1.9 Steel Pipes

Steel pipe shall conform to ASTM A 53/A 53M, Type E or S, Grade A, galvanized nominal size and weight unless noted otherwise.

2.1.10 Pipe Caps

Pipe caps shall conform to ASME B16.3.

2.1.11 Cover Plate

Cover plates shall conform to FS QQ-F-461, Class 1, Pattern No. 7, 10, 12, or 17. Sharp edges and burrs shall be removed from plates.

2.1.12 Manhole Frames and Covers

Frames and covers are to be Gray Iron Castings, Type A-1497 as manufactured by Alhambra Foundry Co. Ltd. or approved equal. Castings for manhole frames and covers shall conform to ASTM A 48, Class 30. Frame and cover shall be machined to fit. Lids shall be imprinted with the words "Clark County Public Works Storm Drain".

2.1.13 Steel Chain Gate

Chain safety gate shall be manufactured from 6 mm diameter carbon steel coil in accordance with ASTM A 467/A 467M.

PART 3 EXECUTION

3.1 GENERAL INSTALLATION REQUIREMENTS

All items shall be installed at the locations shown and according to the manufacturer's recommendations. Items listed below require additional procedures as specified.

3.2 FINISHING

In general, tolerances for machine-finished surfaces designated by nondeciaml dimensions shall be within 0.4 mm. Sufficient machining stock shall be allowed on placing pads to insure true surfaces of solid material. Finished contacts of bearing surfaces shall be true and exact to secure full contact. All drilled holes for bolts shall be accurately located and drilled from templates.

3.3 ZINC COATING (GALVANIZING)

Zinc coatings shall be applied in a manner and of a thickness and quality conforming to ASTM A 123/A 123M. All exposed ferrous metalwork, except cast-iron and corrosion resistant steel and items to be completely embedded in concrete, shall be galvanized unless other protective coatings are specified. Metalwork shall be galvanized after fabrication. In the event that any portion of galvanized metalwork is abraded or otherwise damaged to the extent that the base metal is exposed, such damaged or abraded portions shall be neatly covered with Grade 50B solder conforming to the requirements of ASTM B 32.

3.4 WELDING

Welding shall conform to the provisions of AWS D1.1. Welders who have not been certified within two years of the date of commencement of work under this contract will not be allowed to perform the work.

3.5 BOLTED CONNECTIONS

Bolt holes shall be reamed normal to the member and shall be truly cylindrical throughout. Unless otherwise specified, holes for bolts shall not be more than 1.60 mm larger than the diameter of the bolt. Cutting

bolt holes with a torch will not be permitted without the prior written approval of the Contracting Officer. Materials and parts necessary to complete each item, even though such work is not definitely shown or specified, shall be included. Poor matching of holes for fasteners shall be cause for rejection. Fastenings shall be concealed where practicable.

3.6 EXCAVATION

Excavation for concrete-embedded items shall be of the dimensions indicated on the drawings. Holes shall be cleared of loose materials prior to placement of concrete.

3.7 PIPE BOLLARDS

Pipe bollards shall be fabricated with heavy duty steel pipe conforming to ASTM A 53/A 53M, Type E or S, weight STD, galvanized after fabrication as shown on the drawings. Pipe bollards shall be set vertically in concrete encasements. Concrete for encasements and pipe fill where indicated shall be as specified in SECTION 03301 CAST-IN-PLACE STRUCTURAL CONCRETE having a compressive strength of 21 MPa.

3.8 PAINTING

Painting of pipe bollards shall be in accordance with the requirements of the UNIFORM STANDARD DRAWINGS FOR PUBLIC WORKS' CONSTRUCTION OFF-SITE IMPROVEMENTS, CLARK COUNTY AREA NEVADA, SECTIONS 614 AND SECTION 714.

3.9 STILLING WELLS

3.9.1 Steel Cover Plates and Frames

Steel cover plates and frames shall be of the type and size specified or shown on the drawings and shall be fabricated to accurately fit the supporting member. Openings shall be provided as shown on the drawings or as required. Steel cover plates and frames shall be galvanized after fabrication.

-- End of Section --

SECTION TABLE OF CONTENTS

DIVISION 09 - FINISHES

SECTION 09900

PAINTS, COATINGS AND STATION MARKINGS

PART 1 GENERAL

1.1 REFERENCES
1.2 SUBMITTALS
1.3 QUALITY ASSURANCE
1.3.1 Statements of Product or Material
1.4 REGULATORY REQUIREMENTS
1.4.1 Environmental Protection
1.4.2 Lead Content
1.4.3 Chromate Content
1.4.4 Asbestos Content
1.4.5 Mercury Content
1.4.6 Human Carcinogens
1.5 PACKAGING, LABELING, AND STORAGE
1.6 SAFETY AND HEALTH
1.6.1 Safety Methods Used During Coating Application
1.6.2 Toxic Materials
1.6.3 Worker Exposures
1.6.4 Toxic Compounds
1.6.5 Training
1.6.6 Coordination
1.7 ENVIRONMENTAL CONDITIONS
1.7.1 Coatings
1.8 COLOR SELECTION

PART 2 PRODUCTS

2.1 MATERIALS
2.1.1 Paint
2.1.1.1 Colors and Tints
2.1.1.2 Exterior Paint on Concrete

PART 3 EXECUTION

3.1 PROTECTION OF AREAS AND SPACES NOT TO BE PAINTED
3.2 SURFACE PREPARATION
3.3 PREPARATION OF CONCRETE AND CEMENTITIOUS SURFACE
3.3.1 Concrete and Masonry
3.4 APPLICATION
3.4.1 Coating Application
3.5 COATING SYSTEMS FOR CONCRETE SUBSTRATES OTHER THAN STATION MARKING
3.6 STATION MARKING
3.6.1 General, Station Marking

3.6.2 Preparation of Surfaces, Station Marking
3.6.3 Application, Station Marking
3.6.4 TABULATION OF LOCATION AND TEXT OF STATION MARKINGS
3.6.4.1 Tabulation F-1 Channel
3.6.4.2 Tabulation F-2 Channel
3.7 INSPECTION AND ACCEPTANCE

-- End of Section Table of Contents --

SECTION 09900

PAINTS, COATINGS AND STATION MARKINGS

PART 1 GENERAL

1.1 REFERENCES

The publications listed below form a part of this specification to the extent referenced. The publications are referred to within the text by the basic designation only.

AMERICAN CONFERENCE OF GOVERNMENTAL INDUSTRIAL HYGIENISTS (ACGIH)

ACGIH Limit Values	(1999) Threshold Limit Values for Chemical Substances and Physical Agents Biological Exposure Indices

CODE OF FEDERAL REGULATIONS (CFR)

29 CFR 1910.1000	Air Contaminants

FEDERAL SPECIFICATIONS (FS)

FS TT-P-115	(Rev. F) Paint, Traffic (Highway, White and Yellow)

FEDERAL STANDARDS (FED-STD)

FED-STD-313	(Rev. C) Material Safety Data, Transportation Data and Disposal Data for Hazardous Materials Furnished to Government Activities

THE SOCIETY FOR PROTECTIVE COATINGS (SSPC)

SSPC PA 1	(1991) Shop, Field, and Maintenance Painting
SSPC PA 3	(1995) Safety in Paint Application

U.S. ARMY CORPS OF ENGINEERS (USACE)

COE EM 385-1-1	(1996) Safety and Health Requirements Manual

1.2 SUBMITTALS

Government approval is required for submittals with a "G" designation; submittals not having a "G" designation are for information only. When used, a designation following the "G" designation identifies the office

that will review the submittal for the Government. The "RE" designates that the Resident Office will review the submittal for the Government. Submit the following in accordance with Section 01330, SUBMITTAL PROCEDURES:

Samples of specified materials may be taken and tested for compliance with specification requirements.

SD-03 Product Data

Manufacturer's Technical Data Sheets.

SD-04 Samples

Color; G, RE.

Submit manufacturer's samples of paint colors. Cross reference color samples to color scheme as indicated.

SD-07 Certificates

Statements.

Submit statements signed by responsible officials of manufacturer of product or material attesting that product or material meets specification requirements. Must be dated after award of project contract and clearly name the project.

SD-08 Manufacturer's Instructions

Application instructions.

Mixing.

Detailed mixing instructions, minimum and maximum application temperature and humidity, potlife, and curing and drying times between coats.

Manufacturer's Material Safety Data Sheets.

Submit manufacturer's Material Safety Data Sheets for coatings, solvents, and other potentially hazardous materials, as defined in FED-STD-313.

1.3 QUALITY ASSURANCE

1.3.1 Statements of Product or Material

The Contractor shall provide statements signed by responsible officials of manufacturer of product or material attesting that product or material meets specification requirements. Must be dated after award of project contract and clearly name the project.

1.4 REGULATORY REQUIREMENTS

1.4.1 Environmental Protection

In addition to requirements specified elsewhere for environmental protection, provide coating materials that conform to the restrictions of the local Air Pollution Control District and regional jurisdiction. Notify Contracting Officer of any paint specified herein which fails to conform.

1.4.2 Lead Content

Do not use coatings having a lead content over 0.06 percent by weight of nonvolatile content.

1.4.3 Chromate Content

Do not use coatings containing zinc-chromate or strontium-chromate.

1.4.4 Asbestos Content

Materials shall not contain asbestos.

1.4.5 Mercury Content

Materials shall not contain mercury or mercury compounds.

1.4.6 Human Carcinogens

Materials shall not contain ACGIH Limit Values confirmed human carcinogens (A1) or suspected human carcinogens (A2).

1.5 PACKAGING, LABELING, AND STORAGE

Paints shall be in sealed containers that legibly show the contract specification number, designation name, formula or specification number, batch number, color, quantity, date of manufacture, manufacturer's formulation number, manufacturer's directions including any warnings and special precautions, and name and address of manufacturer. Pigmented paints shall be furnished in containers not larger than 20 liters. Paints and thinners shall be stored in accordance with the manufacturer's written directions, and as a minimum, stored off the ground, under cover, with sufficient ventilation to prevent the buildup of flammable vapors, and at temperatures between 4 to 35 degrees C. Paints shall be stored on the project site or segregated at the source of supply sufficiently in advance of need to allow 30 days for testing.

1.6 SAFETY AND HEALTH

Apply coating materials using safety methods and equipment in accordance with the following:

Work shall comply with applicable Federal, State, and local laws and regulations, and with the ACCIDENT PREVENTION PLAN, including the Activity Hazard Analysis as specified in the CONTRACT CLAUSES and in COE EM 385-1-1 Appendix A. The Activity Hazard Analysis shall include analyses of the potential impact of painting operations on painting personnel and on others involved in and adjacent to the work zone.

1.6.1 Safety Methods Used During Coating Application

Comply with the requirements of SSPC PA 3.

1.6.2 Toxic Materials

To protect personnel from overexposure to toxic materials, conform to the most stringent guidance of:

a. The applicable manufacturer's Material Safety Data Sheets (MSDS) or local regulation.

b. 29 CFR 1910.1000.

c. ACGIH Limit Values, threshold limit values.

1.6.3 Worker Exposures

Exposure of workers to hazardous chemical substances shall not exceed limits established by ACGIH Limit Values, or as required by a more stringent applicable regulation.

1.6.4 Toxic Compounds

Toxic products having ineffective physiological warning properties, such as no or low odor or irritation levels, shall not be used unless approved by the Contracting Officer.

1.6.5 Training

Workers having access to an affected work area shall be informed of the contents of the applicable material safety data sheets (MSDS) and shall be informed of potential health and safety hazard and protective controls associated with materials used on the project. An affected work area is one which may receive mists and odors from the painting operations. Workers involved in preparation, painting and clean-up shall be trained in the safe handling and application, and the exposure limit, for each material which the worker will use in the project. Personnel having a need to use respirators and masks shall be instructed in the use and maintenance of such equipment.

1.6.6 Coordination

Work shall be coordinated to minimize exposure of building occupants, other Contractor personnel, and visitors to mists and odors from preparation, painting and clean-up operations.

1.7 ENVIRONMENTAL CONDITIONS

1.7.1 Coatings

Do not apply coating when air or substrate conditions are:

a. Less than 3 degrees C above dew point;

b. Below 10 degrees C or over 35 degrees C, unless specifically pre-approved by the Contracting Officer and the product manufacturer. Under no circumstances shall application conditions exceed manufacturer recommendations.

c. Unless otherwise recommended by the paint manufacturer, the ambient temperature shall be between 7 and 35 degrees C when applying coatings other than water-thinned, epoxy, and moisture-curing polyurethane coatings. Water-thinned coatings shall be applied only when ambient temperature is between 10 and 32 degrees C. Epoxy, and moisture-curing polyurethane coatings shall be applied only within the nimimum and maximum temperatures recommended by the coating manufacturer. Mositure-curing polyurethane shall not be applied when the relative humidity is below 30 percent.

1.8 COLOR SELECTION

Colors of finish coats shall be as indicated or specified. Where not indicated or specified, colors shall be selected by the Contracting Officer. Manufacturers' names and color identification are used for the purpose of color identification only. Named products are acceptable for use only if they conform to specified requirements. Products of other manufacturers are acceptable if the colors approximate colors indicated and the product conforms to specified requirements.

Tint each coat progressively darker to enable confirmation of the number of coats.

PART 2 PRODUCTS

2.1 MATERIALS

Conform to the coating specifications and standards referenced in PART 3. Submit manufacturer's technical data sheets for specified coatings and solvents.

2.1.1 Paint

The term "paint" as used herein includes emulsions, enamels, paints, stains, varnishes, sealers, cement-emulsion filler, and other coatings, whether used as prime, intermediate, or finish coat. Additional requirements are as follows:

2.1.1.1 Colors and Tints

Color samples for concrete channel wall stain and for pipe safety railing paint shall be submitted to the Contracting Officer and approved colors shall be determined by Contracting Officer.

2.1.1.2 Exterior Paint on Concrete

Exterior paint on concrete shall conform to FS TT-P-115, except the color shall be non-fading black, non-fading yellow,and reflective white.

PART 3 EXECUTION

3.1 PROTECTION OF AREAS AND SPACES NOT TO BE PAINTED

Prior to surface preparation and coating applications, remove, mask, or otherwise protect, hardware, hardware accessories, machined surfaces, radiator covers, plates, lighting fixtures, public and private property, and other such items not to be coated that are in contact with surfaces to be coated. Following completion of painting, workmen skilled in the trades involved shall reinstall removed items. Restore surfaces contaminated by coating materials, to original condition and repair damaged items.

3.2 SURFACE PREPARATION

Remove dirt, splinters, loose particles, grease, oil, and other foreign matter and substances deleterious to coating performance as specified for each substrate before application of paint or surface treatments. Oil and grease shall be removed prior to mechanical cleaning. Cleaning shall be programmed so that dust and other contaminants will not fall on wet, newly painted surfaces. Exposed ferrous metals such as nail heads on or in contact with surfaces to be painted with water-thinned paints, shall be spot-primmed with a suitable corrosion-inhibitive primer capable of preventing flash rusting and compatible with the coating specified for the adjacent areas.

3.3 PREPARATION OF CONCRETE AND CEMENTITIOUS SURFACE

3.3.1 Concrete and Masonry

a. Curing: Concrete and masonry surfaces shall be allowed to cure at least 30 days before painting, except concrete slab on grade, which shall be allowed to cure 90 days before painting.

b. Surface Cleaning: Remove the following deleterious substances.

(1) Dirt, Chalking, Grease, and Oil: Wash new and existing uncoated surfaces with a solution composed of 0.2 liter trisodium phosphate, 0.1 liter household detergent, and 6.4 liters of warm water. Then rinse thoroughly with fresh water. For large areas, water blasting or light sand blasting may be used.

(2) Fungus and Mold: Wash new and existing uncoated surfaces with a solution composed of 0.2 liter trisodium phosphate, 0.1 liter household detergent, 1.6 liters 5 percent sodium hypochlorite solution and 4.8 liters of warm water. Rinse thoroughly with fresh water.

(3) Paint and Loose Particles: Remove by wire brushing.

(4) Efflorescence: Remove by scraping or wire brushing followed by washing with a 5 to 10 percent by weight aqueous solution of

hydrochloric (muriatic) acid. Do not allow acid to remain on the surface for more than five minutes before rinsing with fresh water. Do not acid clean more than 0.4 square meter of surface, per workman, at one time.

c. Cosmetic Repair of Minor Defects: Repair or fill mortar joints and minor defects, including but not limited to spalls, in accordance with manufacturer's recommendations and prior to coating application.

3.4 APPLICATION

3.4.1 Coating Application

Painting practices shall comply with applicable federal, state and local laws enacted to insure compliance with Federal Clean Air Standards. Apply coating materials in accordance with SSPC PA 1. SSPC PA 1 methods are applicable to all substrates, except as modified herein.

At the time of application, paint shall show no signs of deterioration. Uniform suspension of pigments shall be maintained during application.

Unless otherwise specified or recommended by the paint manufacturer, paint may be applied by brush, roller, or spray. Rollers for applying paints and enamels shall be of a type designed for the coating to be applied and the surface to be coated.

Paints, except water-thinned types, shall be applied only to surfaces that are completely free of moisture as determined by sight or touch.

Thoroughly work coating materials into joints, crevices, and open spaces. Special attention shall be given to insure that all edges, corners, crevices, welds, and rivets receive a film thickness equal to that of adjacent painted surfaces.

Each coat of paint shall be applied so dry film shall be of uniform thickness and free from runs, drops, ridges, waves, pinholes or other voids, laps, brush marks, and variations in color, texture, and finish. Hiding shall be complete.

Touch up damaged coatings before applying subsequent coats.

a. Drying Time: Allow time between coats, as recommended by the coating manufacturer, to permit thorough drying, but not to present topcoat adhesion problems. Provide each coat in specified condition to receive next coat.

b. Primers, and Intermediate Coats: Do not allow primers or intermediate coats to dry more than 30 days, or longer than recommended by manufacturer, before applying subsequent coats. Follow manufacturer's recommendations for surface preparation if primers or intermediate coats are allowed to dry longer than recommended by manufacturers of subsequent coatings. Each coat shall cover surface of preceding coat or surface completely, and

there shall be a visually perceptible difference in shades of successive coats.

c. Finished Surfaces: Provide finished surfaces free from runs, drops, ridges, waves, laps, brush marks, and variations in colors.

3.5 COATING SYSTEMS FOR CONCRETE SUBSTRATES OTHER THAN STATION MARKING

Safety Striping at access ladders shall follow the same surface preparation and paint application requirements as Station Marking.

3.6 STATION MARKING

3.6.1 General, Station Marking

All markings shall be painted on concrete walls (channel walls, headwalls, abutments, etc. See included Table or Contract Drawings for required locations.

3.6.2 Preparation of Surfaces, Station Marking

See Paragraph PREPARATION OF CONCRETE AND CEMENTITIOUS SURFACE

3.6.3 Application, Station Marking

Painting shall be done in a neat and workmanlike manner and may be applied by brush, spray, roller or any combination of these methods. Painting of numbers and letters shall be accomplished with stencils and brush or spray application. Color for letters and numbers shall be black. All markings on concrete shall be in uniform capital block letters and numbers, 150 mm high, 75 mm wide, and 9 mm width of line. Markings on concrete walls shall be horizontal with the bottom of the marking not lower than 610 mm below the top of the wall or below the soffit of the Reinforced Concrete Box (RCB).

3.6.4 TABULATION OF LOCATION AND TEXT OF STATION MARKINGS

3.6.4.1 Tabulation F-1 Channel

Location of Marking Wall	Station*	Text of Marking	Location of Marking Wall	Station*	Text of Marking
B	14+49.120	F1 4700	B	27+29.282	F1 8900
B	14+79.600	F1 4800	B	27+59.763	F1 9000
B	15+10.080	F1 4900	B	27+90.243	F1 9100
B	15+40.560	F1 5000	B	28+20.723	F1 9200
B	15+71.040	F1 5100	B	28+51.203	F1 9300
B	16+01.520	F1 5200	B	28+81.683	F1 9400
B	16+32.000	F1 5300	B	29+12.163	F1 9500
B	16+62.480	F1 5400	B	29+42.643	F1 9600
B	16+92.960	F1 5500	B	29+73.123	F1 9700
B	17+23.440	F1 5600	B	30+03.603	F1 9800
B	17+53.921	F1 5700	B	30+34.083	F1 9900
B	17+84.401	F1 5800	B	30+64.563	F1 10000
B	18+14.881	F1 5900	B	30+95.043	F1 10100
B	18+45.361	F1 6000	B	31+25.523	F1 10200
B	18+75.841	F1 6100	B	31+56.003	F1 10300
B	19+06.321	F1 6200	B	31+86.483	F1 10400

B	19+36.801	F1 6300	B	32+16.963	F1 10500
B	19+67.281	F1 6400	B	32+47.444	F1 10600
B	19+97.761	F1 6500	B	32+77.924	F1 10700
B	20+28.241	F1 6600	B	33+08.404	F1 10800
B	20+58.721	F1 6700	B	33+38.884	F1 10900
B	20+89.201	F1 6800	B	33+69.364	F1 11000
B	21+19.681	F1 6900	B	33+99.844	F1 11100
B	21+50.161	F1 7000	B	34+30.324	F1 11200
B	21+80.641	F1 7100	B	34+60.804	F1 11300
B	22+11.121	F1 7200	B	34+91.284	F1 11400
B	22+41.602	F1 7300	B	35+21.764	F1 11500
B	22+72.082	F1 7400	B	35+52.244	F1 11600
B	23+02.562	F1 7500	B	35+82.724	F1 11700
B	23+33.042	F1 7600	B	36+13.204	F1 11800
B	23+63.521	F1 7700	B	36+43.684	F1 11900
B	23+94.002	F1 7800	B	36+74.164	F1 12000
B	24+24.482	F1 7900	B	37+04.644	F1 12100
B	24+54.962	F1 8000	B	37+35.125	F1 12200
B	24+85.442	F1 8100			
B	25+15.922	F1 8200			
B	25+46.402	F1 8300			
B	25+76.882	F1 8400			
B	26+07.362	F1 8500			
B	26+37.842	F1 8600			
B	26+68.322	F1 8700			
B	26+98.802	F1 8800			

R = Right Channel Wall (looking downstream)
L = Left Channel Wall (looking downstream)
B = Both Channel Walls
* = The actual location of the channel station shall be accurate to the nearest half meter.

3.6.4.2 Tabulation F-2 Channel

Location of Marking Wall	Station*	Text of Marking
B	10+00.000	F2 000
B	10+30.480	F2 100
B	10+60.960	F2 200
B	10+91.440	F2 300
B	11+21.920	F2 400
B	11+52.400	F2 500
B	11+82.880	F2 600
B	12+13.360	F2 700
B	12+43.840	F2 800

R = Right Channel Wall (looking downstream)
L = Left Channel Wall (looking downstream)
B = Both Channel Walls
* = The actual location of the channel station shall be accurate to the

nearest half meter.
Text

3.7 INSPECTION AND ACCEPTANCE

In addition to meeting previously specified requirements, demonstrate mobility of moving components, including swinging and sliding doors, cabinets, and windows with operable sash, for inspection by the Contracting Officer. Perform this demonstration after appropriate curing and drying times of coatings have elapsed and prior to invoicing for final payment.

-- End of Section --