IFB NO.: DACW09-03-B-0001

U.S. ARMY CORPS
OF ENGINEERS
LOS ANGELES DISTRICT

RIO SALADO (SALT RIVER), ENVIRONMENTAL RESTORATION, INDIAN BEND WASH SEGMENT

TEMPE REACH, ARIZONA

CONSTRUCTION SOLICITATION AND SPECIFICATIONS

8(A) COMPETITIVE

MAY 2003

This page was intentionally left blank for duplex printing.

w03b0001 RIO SALADO ENVIRONMENTAL RESTORATION PROJECT, TEMPE REACH:
INDIAN BEND WASH, TEMPE, AZ

PROJECT TABLE OF CONTENTS

00COVER COVER
00TOC TABLE OF CONTENTS
00SF1442 SOLICITATION, OFFER and AWARD (SF 1442)
00CorpPr CERTIFICATE OF CORPORAL PRINCIPAL

DIVISION 0 - BIDDING REQUIREMENTS, CONTRACT FORMS AND CONTRACT CONDITIONS

00010 SOLICITATION CONTRACT FORM
00100 Bidding Schedule/Instructions to Bidders
00600 REPRERSENTATIONS AND CERTIFICATIONS
00700 CONTRACT CLAUSES
00800 SPECIAL CONTRACT REQUIREMENTS
00850 WAGE RATES

DIVISION 1 - GENERAL REQUIREMENTS

01110N SUMMARY OF WORK
01200 GENERAL REQUIREMENTS
01200b CONSTRUCTION SIGNS
01270A MEASUREMENT AND PAYMENT
01312A QUALITY CONTROL SYSTEM (QCS)
01320A PROJECT SCHEDULE
01330 SUBMITTAL PROCEDURES
01330b SUBMITTAL REGISTER
01330c SUBMITTAL FORM (4025)
01351A SAFETY, HEALTH, AND EMERGENCY RESPONSE (HTRW/UST)
01355 ENVIRONMENTAL PROTECTION
01356 STORM WATER POLLUTION PREVENTION MEASURES
01420 SOURCES FOR REFERENCE PUBLICATIONS
01451A CONTRACTOR QUALITY CONTROL
01580N PROJECT IDENTIFICATION
01702 AS-BUILT DRAWINGS

DIVISION 2 - SITE WORK

02230A CLEARING AND GRUBBING
02220A EARTHWORK
02316A EXCAVATION, TRENCHING, AND BACKFILLING FOR UTILITIES
SYSTEMS
02333 TREATED AND COMPACTED SOIL LINER
02510 WATER DISTRIBUTION SYSTEM
02722A AGGREGATE BASE COURSE
02741A HOT-MIX ASPHALT (HMA)
2761N PAVEMENT MARKINGS
02770A CONCRETE SIDEWALKS AND CURBS AND GUTTERS
02811A UNDERGROUND IRRIGATION SYSTEM
02832 SEGMENTAL CONCRETE BLOCK RETAINING WALL
02870A SITE FURNISHINGS
02921A SEEDING
02930A EXTERIOR PLANTING

DIVISION 3 - CONCRETE

03201 STEEL BARS AND WELDED WIRE FABRIC FOR CONCRETE REINFORCEMENT FOR CIVIL WORKS
03307A CONCRETE FOR MINOR STRUCTURES
03410N PLANT-PRECAST STRUCTURAL CONCRETE
03601 GROUTED RIP-RAP

DIVISION 4 - MASONRY

04200A MASONRY

DIVISION 5 - METALS

05500A MISCELLANEOUS METAL

DIVISION 11 - EQUIPMENT

11211A WATER, CENTRIFUGAL

DIVISION 13 - SPECIAL CONSTRUCTION

13405A PROCESS CONTROL

DIVISION 16 - ELECTRICAL

16050N BASIC ELECTRICAL MATERIALS AND METHODS
16120A INSULATED WIRE AND CABLE
16302N UNDERGROUND AND ABOVE-GROUND TRANSMISSION AND DISTRIBUTION
16403A PANELBOARDS AND TRANSFORMERS
16520N EXTERIOR LIGHTING

SOLICITATION, OFFER, AND AWARD (Construction, Alteration, or Repair)	1. SOLICITATION NO.	2. TYPE OF SOLICITATION	3. DATE ISSUED	PAGE OF PAGES
	** DACW09-03-B-0001	[X] SEALED BID (IFB) [ ] NEGOTIATED (RFP)	9 MAY 2003	

IMPORTANT - The "offer" section on the reverse must be fully completed by offeror.

4. CONTRACT NO.	5. REQUISITION/PURCHASE REQUEST NO.	6. PROJECT NO.
	W81EYN-2153-0001	

7. ISSUED BY CODE

DEPARTMENT OF THE ARMY, L.A. DISTRICT
P.O. BOX 532711, CESPL-CT-E
LOS ANGELES, CA 90053-2325

ATTN: SANDY HALL

8. ADDRESS OFFER TO

SEE ITEM 7

9. FOR INFORMATION CALL:	A. NAME	B. TELEPHONE NO. (Include area code) (NO COLLECT CALLS)
	SANDY HALL	(213) 452-3243

SOLICITATION

NOTE: In sealed bid solicitations "offer" and "offeror" mean "bid" and "bidder".

10. THE GOVERNMENT REQUIRES PERFORMANCE OF THE WORK DESCRIBED IN THESE DOCUMENTS (Title, identifying no., date):

RIO SALADO (SALT RIVER), ENVIRONMENTAL RESTORATION, INDIAN BEND WASH SEGMENT, TEMPE REACH, ARIZONA.

THE PROJECT CONSISTS OF ENVIRONMENTAL RESTORATION TO DEVELOP HABITAT AREAS AND OPEN WATER MARSHES. PROJECT IS LOCATED WITHIN THE INDIAN BEND WASH BOUNDARIES BETWEEN MCKELLIPS ROAD CROSSING (UPSTREAM) AND MERGING POINT OF THE SALT RIVER NEAR TOWN LAKE.

THE ESTIMATED COST RANGE OF THIS ACQUISITION IS $1,000,000.00 - $5,000,000.00.

BIDDERS PLEASE NOTE: THIS PROJECT MAY BE DELAYED, CANCELLED OR REVISED AT ANY TIME DURING THE SOLICITATION, NEGOTIATION AND/OR FINAL AWARD PROCESS.

THIS IS A 100% 8(A) SET-ASIDE LIMITED TO 8(A) CONTRACTORS WHOSE APPROVED BUSINESS PLAN IS ON FILE WITH THE SBA ARIZONA DISTRICT AND WHO HAVE AN ESTABLISHED BRANCH OFFICE IN ARIZONA. ALL OTHER FIRMS ARE DEEMED INELIGLBLE TO SUBMIT OFFERS.

11. The Contractor shall begin performance within 10 calendar days and complete it within 365 calendar days after receiving

[ ] award, [X] notice to proceed. This performance period is [X] mandatory, [ ] negotiable. (See Section 00800 .)

12A. THE CONTRACTOR MUST FURNISH ANY REQUIRED PERFORMANCE AND PAYMENT BONDS? (If "YES," indicate within how may calendar days after award in Item 12B.)	12B. CALENDAR DAYS
[X] YES [ ] NO	10

13. ADDITIONAL SOLICITATION REQUIREMENTS:

A. Sealed offers in original and 0 copies to perform the work required are due at the place specified in Item 8 by 1:00 P.M. (hour) local time 19 June 2003 (date). If this is a sealed bid solicitation, offers will be publicly opened at that time. Sealed envelopes containing offers shall be marked to show the offeror's name and address, the solicitation number, and the date and time offers are due.

B. An offer guarantee [X] is, [ ] is not required.

C. All offers are subject to the (1) work requirements, and (2) other provisions and clauses incorporated in the solicitation in full text or by reference.

D. Offers providing less than 90 calendar days for Government acceptance after the date offers are due will not be considered and will be rejected.

OFFER *(Must be fully completed by offeror)*

14. NAME AND ADDRESS OF OFFEROR *(Include ZIP Code)*

15. TELEPHONE NO. *(Include area code)*

16. REMITTANCE ADDRESS *(Include only if different than Item 14)*

CAGE CODE:_____ DUNS NO.:_____

CODE FACILITY CODE

17. The offeror agrees to perform the work required at the prices specified below in strict accordance with the terms of this solicitation, if this offer is accepted by the Government in writing within _____ calendar days after the date offers are due. *(Insert any number equal to or greater than the minimum requirement stated in Item 13D. Failure to insert any number means the offeror accepts the minimum in Item 13D.*

AMOUNTS ▶ SEE BID SCHEDULE

18. The offeror agrees to furnish any required performance and payment bonds.

19. ACKNOWLEDGMENT OF AMENDMENTS
(The offeror acknowledges receipt of amendments to the solicitation - give number and date of each)

AMENDMENT NO.										
DATE										

20A. NAME AND TITLE OF PERSON AUTHORIZED TO SIGN OFFER *(Type or print)*

20B. SIGNATURE

20C. OFFER DATE

AWARD *(To be completed by Government)*

21. ITEMS ACCEPTED:

22. AMOUNT

23. ACCOUNTING AND APPROPRIATION DATA

24. SUBMIT INVOICES TO ADDRESS SHOWN IN *(4 Copies unless otherwise specified)* ▶ ITEM

25. OTHER THAN FULL AND OPEN COMPETITION PURSUANT TO
☐ 10 U.S.C 2304(c) ( ) ☐ 41 U.S.C 253(c) ( )

26. ADMINISTERED BY CODE

27. PAYMENT WILL BE MADE BY

CONTRACTING OFFICER WILL COMPLETE ITEM 28 OR 29 AS APPLICABLE

☐ 28. NEGOTIATED AGREEMENT *Contractor is required to sign this document and return _____ copies to issuing office.)* Contractor agrees to furnish and deliver all items or perform all work requirements identified on this form and any continuation sheets for the consideration stated in this contract. The rights and obligations of the parties to this contract shall be governed by (a) this contract award, (b) the solicitation, and (c) the clauses, representations, certifications, and specifications incorporated by reference in or attached to this contract.

☐ 29. AWARD *(Contractor is not required to sign this document.)* Your offer on this solicitation is hereby accepted as to the items listed. This award con- summates the contract, which consists of (a) the Government solicitation and your offer, and (b) this contract award. No further contractual document is necessary.

30A. NAME AND TITLE OF CONTRACTOR OR PERSON AUTHORIZED TO SIGN *(Type or print)*

31A. NAME OF CONTRACTING OFFICER *(Type or print)*

30B. SIGNATURE

30C. DATE

31B. UNITED STATES OF AMERICA

BY

31C. AWARD DATE

CONTRACT NO.: DACW09-03-B-0001

CERTIFICATE OF CORPORATE PRINCIPAL

1) IF THE OFFEROR IS A JOINT VENTURE, COMPLETE THE FOLLOWING:

_____	_____	_____
(Company Name)	(Signature)	(Title)
_____	_____	_____
(Company Name)	(Signature)	(Title)
_____	_____	_____
(Company Name)	(Signature)	(Title)

2) IF THE OFFEROR IS PARTNERSHIP, LIST FULL NAME OF ALL PARTNERS:

_____	_____	_____
(Company Name)	(Signature)	(Title)
_____	_____	_____
(Company Name)	(Signature)	(Title)
_____	_____	_____
(Company Name)	(Signature)	(Title)

3) IF THE OFFEROR IS A CORPORATION, THE FOLLOWING CERTIFICATION SHOULD BE COMPLETED:

CERTIFICATION AS TO CORPORATE PRINCIPAL

I, _____, certify that I am the Secretary of the corporation named as principal in the within contract; that _____, who signed the said contract on behalf of the principal, was the _____ of the corporation; that I know his signature and that his signature is genuine; and that said contract was duly signed, sealed and attested for in behalf of said corporation by authority of its governing body.

_____
CORPORATE PRINCIPAL

CORPORATE SEAL

_____
SECRETARY

This page was intentionally left blank for duplex printing.

Section 00010 - Solicitation Contract Form

ITEM NO	SUPPLIES/SERVICES	QUANTITY	UNIT	UNIT PRICE	AMOUNT
0001	MOBILIZATION AND DEMOBILIZATION	1	L.S.	$_____	$_____

ITEM NO	SUPPLIES/SERVICES	QUANTITY	UNIT	UNIT PRICE	AMOUNT
0002	CONSTRUCTION SURVEY AND STAKING	1	L.S.	$_____	$_____

ITEM NO	SUPPLIES/SERVICES	QUANTITY	UNIT	UNIT PRICE	AMOUNT
0003	CLEARING, GRUBBING AND DEMOLITION	1	L.S.	$_____	$_____

ITEM NO	SUPPLIES/SERVICES	QUANTITY	UNIT	UNIT PRICE	AMOUNT
0004	WETLAND MARSH CONSTRUCTION	1	L.S.	$_____	$_____

ITEM NO	SUPPLIES/SERVICES	QUANTITY	UNIT	UNIT PRICE	AMOUNT
0005	WETLAND MARSH RECIRCULATION SYSTEM	1	L.S.	$_____	$_____

IM NO	SUPPLIES/SERVICES	QUANTITY	UNIT	UNIT PRICE	AMOUNT
0006	ELECTRICAL POWER SUPPLY	1	L.S.	$_____	$_____

ITEM NO	SUPPLIES/SERVICES	QUANTITY	UNIT	UNIT PRICE	AMOUNT
0007	ELECTRICAL POWER DISTRIBUTION SYSTEM	1	L.S.	$_____	$_____

ITEM NO	SUPPLIES/SERVICES	QUANTITY	UNIT	UNIT PRICE	AMOUNT
0008	CONTROL SYSTEM FOR WETLAND MARSH LEVEL CONTROLS	1	L.S.	$_____	$_____

ITEM NO	SUPPLIES/SERVICES	QUANTITY	UNIT	UNIT PRICE	AMOUNT
0009	LANDSCAPING	1	L.S.	$_____	$_____

ITEM NO	SUPPLIES/SERVICES	QUANTITY	UNIT	UNIT PRICE	AMOUNT
0010	HYDROSEEDING	1	L.S.	$_____	$_____

ITEM NO	SUPPLIES/SERVICES	QUANTITY	UNIT	UNIT PRICE	AMOUNT
0011	IRRIGATION CONTROL SYSTEM	1	L.S.	$_____	$_____

ITEM NO	SUPPLIES/SERVICES	QUANTITY	UNIT	UNIT PRICE	AMOUNT
0012	BORING / INSTALLATION OF 6” DIAMETER SLEEVE AT CURRY ROAD	3,791	Each	$_____	$_____

ITEM NO	SUPPLIES/SERVICES	QUANTITY	UNIT	UNIT PRICE	AMOUNT
0013	IRRIGATION PIPING SYSTEM	1	L.S.	$_____	$_____

ITEM NO	SUPPLIES/SERVICES	QUANTITY	UNIT	UNIT PRICE	AMOUNT
0014	REMOVAL OF EXISTING PATHS	1	L.S.	$_____	$_____

ITEM NO	SUPPLIES/SERVICES	QUANTITY	UNIT	UNIT PRICE	AMOUNT
0015	NEW PORTLAND CEMENT CONCRETE MULTI-USE PATH AND CART PATH	18,000	S.F.	$_____	$_____

ITEM NO	SUPPLIES/SERVICES	QUANTITY	UNIT	UNIT PRICE	AMOUNT
0016	CMU FLOOD WALLS	1	L.S.	$_____	$_____

ITEM NO	SUPPLIES/SERVICES	QUANTITY	UNIT	UNIT PRICE	AMOUNT
0017	TRAFFIC CONTROL SIGNS	1	L.S.	$_____	$_____

ITEM NO	SUPPLIES/SERVICES	QUANTITY	UNIT	UNIT PRICE	AMOUNT
0018	INITIAL LANDSCAPE, IRRIGATION, AND SITE MAINTENANCE	1	L.S.	$_____	$_____

ITEM NO	SUPPLIES/SERVICES	QUANTITY	UNIT	UNIT PRICE	AMOUNT
0019	COBBLE SURFACING AT WETLAND MARSH PERIMETER	18,000	S.F.	$_____	$_____

TOTAL AMOUNT BASE BID (LINE ITEM NO'S. 0001-0019): $_____

OPTION "A"

ITEM NO	SUPPLIES/SERVICES	QUANTITY	UNIT	UNIT PRICE	AMOUNT
0020	MCKELLIPS ROAD BRIDGE DOWNSTREAM TO STA. 36+00 (SEE AREA A)	1	L.S.	$_____	$_____

OPTION "B"

ITEM NO	SUPPLIES/SERVICES	QUANTITY	UNIT	UNIT PRICE	AMOUNT
0021	ENTRY DRIVE AND PARKING LOT AREA (SEE AREA B)	1	L.S.	$_____	$_____

OPTION "C"

ITEM NO	SUPPLIES/SERVICES	QUANTITY	UNIT	UNIT PRICE	AMOUNT
0022	OVERLOOK RAMADA AREA (SEE AREA C)	1	L.S.	$_____	$_____

TOTAL AMOUNT BASE BID PLUS OPTION ITEMS : $_____

NOTES:

1. EXERCISE OF OPTIONS: The Government reserves the right to exercise the option by written notice to the contractor either singularly or in any combination at the time of or after award of the Base Bid but prior to the end of construction without any increase in the offeror's bid price. These options may be exercised any time up to sixty (60) calendar days after receipt of Notice to Proceed. The price for exercise of the option includes all work and effort associated with the scope of that item. For determination of lowest bid, see Clause No. 52.217-5, entitled, "EVALUATION OF OPTIONS", in Section 00100 of this solicitation. No additional time for contract completion time will be allowed when an option is exercised. The given contract completion time was formulated to include time necessary to perform all option work.

CLAUSES INCORPORATED BY FULL TEXT

1. All extensions of the unit prices shown will be subject to verification by the Government. In case of variation between the unit price and the extension, the unit price will be considered to be the bid.

2. If a modification to a bid based on unit prices is submitted which provides for a lump sum adjustment to the total estimated amount, the application of the lump sum adjustment to each unit price in the Price Schedule must be stated. If it is not stated, the bidder agrees that the lump sum adjustment shall be applied on a pro rata basis to every unit price in the Price Schedule.

3. Prices must be submitted on all individual items of the Price Schedule, otherwise the bid will be considered non-responsive and will be rejected.

4. For the purpose of initial evaluation of bids, the following will be utilized in resolving arithmetic discrepancies found on the face of the Price Schedule as submitted by the bidder:

a. Obviously misplaced decimal points will be corrected;
b. In case of discrepancy between the unit price and the extended price, the unit price will govern;
c. Apparent errors in extensions of unit prices will be corrected;
d. Apparent errors in addition of lump sum and extended prices will be corrected.

5. For the purpose of bid evaluation, the Government will proceed on the assumption that the bidder intends the bid to be evaluated on the basis of unit prices the totals arrived at by the resolution of arithmetic discrepancies as provided above and the bid will be so reflected on the abstract of bids.

6. The lump sum “LS” line items in the Price Schedule are not “Estimated Quantity” line items and are not subject to the “Variation in Estimated Quantity” contract clause.

7. The Contract Clause 52.232-27, “Prompt Payment for Construction Contracts” requires that the name and address of the contractor official, to whom payment is to be sent, be the same as that in the contract or in a proper Notice of Assignment.

8. Principal Contracting Officer. The Contracting Officer who signs this contract will be the Principal Contracting Officer for this contract. However, any Contracting Officer assigned to the Los Angeles District, contracting within his authority, may take formal action on this contract when the Principal Contracting Officer is unavailable and the action needs to be taken.

9. Amounts and prices shall be indicated in either words or figures, NOT BOTH.

10. Payment of Electronic Funds Transfer (EFT) is the mandatory method of payment. The Contractors attention is directed to Contract Clause NO. 52.232-33 “Mandatory Information for Electronic Funds Transfer” located in Section 00800.

11. The bidder shall distribute his indirect costs (overhead, profit, bond, etc.,) over all items in the Price Schedule. The Government will review all submitted Price Schedules for any unbalancing of the items. Any submitted Price Schedule determined to be unbalanced may be considered nonresponsive and cause the bidder to be ineligible for contract award.

12. The bidder shall furnish all plant, labor, material, equipment, etc., necessary to perform all work in strict accordance with the terms and conditions set forth in the contract in include all attachments thereto.

13. Some quantities are ESTIMATED, the bidders prices MUST BE FIRM.

14. Bidder is cautioned to check his Price Schedule carefully prior to submission. If the Price Schedule contains unit prices, they should be round off to the second decimal point only NOT EXTENDED FUTHER.

15. Contractor is required to fill in Cage code (Reference Section 00600, entitled "Required Central Contractor Registration" Mar 1998) and DUNS Number (Reference Section 00600, entitled, "Data Universal Numbering System (DUNS) Number" Jun1999) in Block No. 15 on Standard Form 1442, Name and Address Block (Cage Code under Code and DUNS No. under Facility Code respectively).

16. The Government contemplates award on one contract to the responsive, responsible bidder who submits the low bid for the total of all the items in the Price Schedule.

17. THE DEADLINE FOR QUESTIONS AND/OR CLARIFICATION IS 14 DAYS PRIOR TO RECEIPT OF BIDS.

Section 00100 - Bidding Schedule/Instructions to Bidders

CLAUSES INCORPORATED BY FULL TEXT

52.0000-4023 SAFETY REQUIREMENTS 2
52.0001-4004 BID RESULTS 2
52.209-4501 CONTRACTOR REPONSIBILITY, PRE-AWARD SURVEY 2
52.211-2 AVAILABILITY OF SPECIFICATIONS LISTED IN THE DOD INDEX OF SPECIFICATIONS AND STANDARDS (DODISS) AND DESCRIPTIONS LISTED IN THE ACQUISITION MANAGEMENT SYSTEMS AND DATA REQUIREMENTS CONTROL LIST, DOD 5010.12-L (DEC 1999) 2
52.214-3 AMENDMENTS TO INVITATIONS FOR BIDS (DEC 1989)..... 2
52.214-4 FALSE STATEMENTS IN BIDS (APR 1984)..... 3
52.214-5 SUBMISSION OF BIDS (MAR 1997) 3
52.214-6 EXPLANATION TO PROSPECTIVE BIDDERS (APR 1984)..... 3
52.214-9 Failure to Submit Bid. (JUL 1995) 5
52.214-18 PREPARATION OF BIDS--CONSTRUCTION (APR 1984) 5
52.214-19 CONTRACT AWARD--SEALED BIDDING--CONSTRUCTION (AUG 1996) 6
***52.0214-4001 DIRECTIONS FOR SUBMITTING BIDS (APR 2002) 6**
ARITHMETIC DISCREPANCIES EFARS 52.214-5000 9
52.0214-4583 TELEGRAPHIC BIDS/OFFERS ARE NOT ACCEPTABLE 9
FACSIMILE BIDS/OFFERS..... 9
52.0214-4599 EVALUATION FOR AWARD 9
52.216-1 TYPE OF CONTRACT (APR 1984) 9
***52.217-5 EVALUATION OF OPTIONS**……..10
52.225-12 NOTICE OF BUY AMERICAN ACT REQUIREMENT--CONSTRUCTION MATERIALS UNDER TRADE AGREEMENTS (MAY 2002)..... 10
52.228-1 BID GUARANTEE (SEP 1996) 11
52.228-4507 BID GUARANTEE FORM AND AMOUNT 12
52.228-4506 INDIVIDUAL SURETIES IN SUPPORT OF BID BONDS 12
52.233-2 SERVICE OF PROTEST (AUG 1996)..... 12
52.236-27 SITE VISIT (CONSTRUCTION) (FEB 1995) – ALTERNATE I (FEB 1995) 13

52.0000-4023 SAFETY REQUIREMENTS

The bidder's attention is directed to the latest version of U.S Army Corps of Engineers Safety and Health Manual, EM 385-1-1, which will be strictly enforced. This publication may be obtained from the US Army Engineer District, Los Angeles, ATTN: Safety Office, P.O. Box 532711, Los Angeles, California 90053-2325.

52.0001-4004 BID RESULTS

The telephone number for bid results after the opening is Area Code (213) 452-3235.
CONTRACTOR REPONSIBILITY, PRE-AWARD SURVEY

52.209-4501 CONTRACTOR REPONSIBILITY, PRE-AWARD SURVEY

In order to determine a contractor's responsibility for purposes of contract award in accordance with FAR Part 9, a statement regarding previous experience in performing comparable work, and/or plant to be used in performing the work is required. After the bid opening, the Government will request this information and set a due date for its submission.

52.211-2 AVAILABILITY OF SPECIFICATIONS LISTED IN THE DOD INDEX OF SPECIFICATIONS AND STANDARDS (DODISS) AND DESCRIPTIONS LISTED IN THE ACQUISITION MANAGEMENT SYSTEMS AND DATA REQUIREMENTS CONTROL LIST, DOD 5010.12-L (DEC 1999)

Copies of specifications, standards, and data item descriptions cited in this solicitation may be obtained--

(a) From the ASSIST database via the Internet at http://assist.daps.mil; or

(b) By submitting a request to the--Department of Defense Single Stock Point (DoDSSP), Building 4, Section D, 700 Robbins Avenue, Philadelphia, PA 19111-5094, Telephone (215) 697-2667/2179, Facsimile (215) 697-1462.

(End of provision)

52.214-3 AMENDMENTS TO INVITATIONS FOR BIDS (DEC 1989)

(a) If this solicitation is amended, then all terms and conditions which are not modified remain unchanged.

(b) Bidders shall acknowledge receipt of any amendment to this solicitation (1) by

signing and returning the amendment, (2) by identifying the amendment number and date in the space provided for this purpose on the form for submitting a bid, (3) by letter or telegram, or (4) by facsimile, if facsimile bids are authorized in the solicitation. The Government must receive the acknowledgment by the time and at the place specified for receipt of bids.

(End of provision)

52.214-4 FALSE STATEMENTS IN BIDS (APR 1984)

Bidders must provide full, accurate, and complete information as required by this solicitation and its attachments. The penalty for making false statements in bids is prescribed in 18 U.S.C. 1001.

(End of provision)

52.214-5 SUBMISSION OF BIDS (MAR 1997)

(a) Bids and bid modifications shall be submitted in sealed envelopes or packages (unless submitted by electronic means) (1) addressed to the office specified in the solicitation, and (2) showing the time and date specified for receipt, the solicitation number, and the name and address of the bidder.

(b) Bidders using commercial carrier services shall ensure that the bid is addressed and marked on the outermost envelope or wrapper as prescribed in subparagraphs (a)(1) and (2) of this provision when delivered to the office specified in the solicitation.

(c) Telegraphic bids will not be considered unless authorized by the solicitation; however, bids may be modified or withdrawn by written or telegraphic notice.

(d) Facsimile bids, modifications, or withdrawals, will not be considered unless authorized by the solicitation.

(e) Bids submitted by electronic commerce shall be considered only if the electronic commerce method was specifically stipulated or permitted by the solicitation.

(End of provision)

52.214-6 EXPLANATION TO PROSPECTIVE BIDDERS (APR 1984)

Any prospective bidder desiring an explanation or interpretation of the solicitation, drawings, specifications, etc., must request it in writing soon enough to allow a reply to reach all prospective bidders before the submission of their bids. Oral explanations or instructions given before the award of a contract will not be binding. Any information

given a prospective bidder concerning a solicitation will be furnished promptly to all other prospective bidders as an amendment to the solicitation, if that information is necessary in submitting bids or if the lack of it would be prejudicial to other prospective bidders.

(End of provision)

52.214-7 LATE SUBMISSIONS, MODIFICATIONS, AND WITHDRAWALS OF BIDS (NOV 1999)

(a) Bidders are responsible for submitting bids, and any modifications or withdrawals, so as to reach the Government office designated in the invitation for bids (IFB) by the time specified in the IFB. If no time is specified in the IFB, the time for receipt is 4:30 p.m., local time, for the designated Government office on the date that bids are due.

(b)(1) Any bid, modification, or withdrawal received at the Government office designated in the IFB after the exact time specified for receipt of bids is “late” and will not be considered unless it is received before award is made, the Contracting Officer determines that accepting the late bid would not unduly delay the acquisition; and--

(i) If it was transmitted through an electronic commerce method authorized by the IFB, it was received at the initial point of entry to the Government infrastructure not later than 5:00 p.m. one working day prior to the date specified for receipt of bids; or

(ii) There is acceptable evidence to establish that it was received at the Government installation designated for receipt of bids and was under the Government's control prior to the time set for receipt of bids.

(2) However, a late modification of an otherwise successful bid that makes its terms more favorable to the Government, will be considered at any time it is received and may be accepted.

(c) Acceptable evidence to establish the time of receipt at the Government installation includes the time/date stamp of that installation on the bid wrapper, other documentary evidence of receipt maintained by the installation, or oral testimony or statements of Government personnel.

(d) If an emergency or unanticipated event interrupts normal Government processes so that bids cannot be received at the Government office designated for receipt of bids by the exact time specified in the IFB and urgent Government requirements preclude amendment of the IFB, the time specified for receipt of bids will be deemed to be extended to the same time of day specified in the solicitation on the first work day on which normal Government processes resume.

(e) Bids may be withdrawn by written notice received at any time before the exact time set for receipt of bids. If the IFB authorizes facsimile bids, bids may be withdrawn via facsimile received at any time before the exact time set for receipt of bids, subject to the conditions specified in the provision at 52.214-31, Facsimile Bids. A bid may be withdrawn in person by a bidder or its authorized representative if, before the exact time set for receipt of bids, the identity of the person requesting withdrawal is established and the person signs a receipt for the bid.

(End of provision)

52.214-9 Failure to Submit Bid. (JUL 1995)

Recipients of this solicitation not responding with a bid should not return this solicitation, unless it specifies otherwise. Instead, they should advise the issuing office by letter, postcard, or established electronic commerce methods, whether they want to receive future solicitations for similar requirements.

(End of provision)

52.214-18 PREPARATION OF BIDS--CONSTRUCTION (APR 1984)

(a) Bids must be (1) submitted on the forms furnished by the Government or on copies of those forms, and (2) manually signed. The person signing a bid must initial each erasure or change appearing on any bid form.

(b) The bid form may require bidders to submit bid prices for one or more items on various bases, including--

(1) Lump sum bidding;

(2) Alternate prices;

(3) Units of construction; or

(4) Any combination of subparagraphs (1) through (3) above.

(c) If the solicitation requires bidding on all items, failure to do so will disqualify the bid. If bidding on all items is not required, bidders should insert the words "no bid" in the space provided for any item on which no price is submitted.

(d) Alternate bids will not be considered unless this solicitation authorizes their submission.

(End of provision)

52.214-19 CONTRACT AWARD--SEALED BIDDING--CONSTRUCTION (AUG 1996)

(a) The Government will evaluate bids in response to this solicitation without discussions and will award a contract to the responsible bidder whose bid, conforming to the solicitation, will be most advantageous to the Government, considering only price and the price-related factors specified elsewhere in the solicitation.

(b) The Government may reject any or all bids, and waive informalities or minor irregularities in bids received.

(c) The Government may accept any item or combination of items, unless doing so is precluded by a restrictive limitation in the solicitation or the bid.

(d) The Government may reject a bid as nonresponsive if the prices bid are materially unbalanced between line items or subline items. A bid is materially unbalanced when it is based on prices significantly less than cost for some work and prices which are significantly overstated in relation to cost for other work, and if there is a reasonable doubt that the bid will result in the lowest overall cost to the Government even though it may be the low evaluated bid, or if it is so unbalanced as to be tantamount to allowing an advance payment.

(End of provison)

52.0214-4001 DIRECTIONS FOR SUBMITTING BIDS (APR 2002)

(a) Envelopes containing bids, bid guarantees, etc., must be sealed, marked and addressed as follows:

MARK ENVELOPES:

Bid under IFB No.: DACW09-01-B-0003
Bid Opening Date: 19 June 2003, 1:00 P.M.

ADDRESS ENVELOPES as follows:

US ARMY ENGINEER DISTRICT, LOS ANGELES
ATTN: CONTRACTING DIVISION
C/O: Sandy Hall
P.O. Box 532711
Los Angeles, California 90053-2325

(b) Telegraphic Modifications to Bids should be addressed to:

U.S. Army Engineer District, Los Angeles
Contracting Division,
911 Wilshire Blvd.
Los Angeles, California 90017

(c) SPECIAL INSTRUCTIONS PERTAINING TO HAND-CARRIED BIDS:

Due to security precautions, all Corps of Engineers visitors/couriers are now required to check in at the Public Affairs Office (PAO), Suite 980, Wilshire Blvd, Los Angeles, CA. Bidders are no longer permitted to hand-carry their bids directly to Contacting Division without an authorized escort. **Bids may NOT be left unattended at the Public Affairs Office (PAO), Suite 980. Submit Federal Express Deliveries to the above street address, Suite 930.**

Bidders who desire to hand-deliver their bids prior to the scheduled bid opening time/date must notify the Contracting Division to arrange for receipt of their bid by Contracting Division personnel. Normally the contact will be the Contract Specialist designated above. In the event the Contract Specialist cannot be reached, please call the main Contracting Division telephone number, 213-452-3231 or the following alternative telephone numbers -3233, -3245, -3234, or -3235, in order to request assistance.

30 minutes prior to the scheduled bid opening time/date, the Bid Opening Officer will be in the Public Affairs Office (PAO) Suite 980, to accept bids. After visitor in-processing, all bidders will subsequently be escorted to Bid Opening Room, where the bids will be publicly opened and read.

In order to expedite visitor processing, bidders are encouraged to complete the information requested on the Notice of Visitor(s) Form (attached). The completed form can be faxed to the Contract Specialist at (213)452-4184 or 4187, prior to the date for receipt of bids. In addition, no more than 2 visitors per firm will be permitted within the building. No exceptions will be made. The offeror is responsible for compliance with the security requirements and shall ensure that any company representative, courier or delivery personnel are aware of these special procedures pertaining to hand carried bids.

NOTICE OF VISITOR(S)

1. Date(s) of Visit *(Inclusive)*	**2. Arrival Time**	
3. Name of Visitor(s) *(Last, First)*	**4. Agency/Company of Visitor**	
5. Name of Person Being Visited *(Include Div, Br, Sec)*	**6. Suite Number**	**7. Telephone Number**
8. Contact Person *(if other than Person Being Visited)*		**9. Telephone Number**
10. Other Comments or Instructions		

- All visitors must report to the Public Affairs Office, Suite 980
- Visitors must use the Visitor Tag provided.
- Visitors must be escorted to Corps of Engineers floors
- Parking validation is only available for Engineering Division, Construction-Operations, and Information Management field personnel.
- Delivery personnel will be validated for 30 minutes only.

ARITHMETIC DISCREPANCIES EFARS 52.214-5000

(a) For the purpose of initial evaluation of bids, the following will be utilized in resolving arithmetic discrepancies found on the face of the bidding schedule as submitted by bidders:

(1) Obviously misplaced decimal points will be corrected;

(2) Discrepancy between unit price and extended price, the unit price will govern;

(3) Apparent errors in extension of unit prices will be corrected;

(4) Apparent errors in addition of lump sum and extended prices will be corrected.

(b) For the purpose of bid evaluation, the Government will proceed on the assumption that the bidder intends his bid to be evaluated on the basis of the unit prices, the totals arrived at by resolution of arithmetic discrepancies as provided above and the bid will be so reflected on the abstract of bids.

(c) These correction procedures shall not be used to resolve any ambiguity concerning which bid is low.

(End of statement)

52.0214-4583 TELEGRAPHIC BIDS/OFFERS ARE NOT ACCEPTABLE

Any telegram to modify or withdraw a bid/offer sent to this office must be physically delivered to the office designated for receipt of bid/offer by the date and time set for bid opening/receipt of proposals.
No one from this office will be dispatched to the local telegraph office to pick up any telegram for any reason.

FACSIMILE BIDS/OFFERS

Facsimile bids/offers, modifications thereto, or cancellations of bids/offers will not be accepted.

52.0214-4599 EVALUATION FOR AWARD

The Government contemplates award of one contract to the responsive, responsible bidder who submits the low bid for the total of all the items in the Bidding Schedule.

52.216-1 TYPE OF CONTRACT (APR 1984)

The Government contemplates award of a FIRM FIXED PRICE contract resulting from this solicitation.

(End of clause)

52.217-5 EVALUATION OF OPTIONS (JUL 1990)

(a) Except when it is determined in accordance with FAR 17.206(b) not to be in the Government's best interests, the Government will evaluate offers for award purposes by adding the total price for all options to the total price for the basic requirement. Evaluation of options will not obligate the Government to exercise the option(s).

(b) The Government may reject an offer as nonresponsive if it is materially unbalanced as to prices for the basic requirement and the option quantities. An offer is unbalanced when it is based on prices significantly less than cost for some work and prices which are significantly overstated for other work.

(End of provision)

52.225-12 NOTICE OF BUY AMERICAN ACT REQUIREMENT--CONSTRUCTION MATERIALS UNDER TRADE AGREEMENTS (MAY 2002)

(a) Definitions. Construction material, designated country construction material, domestic construction material, foreign construction material, and NAFTA country construction material, as used in this provision, are defined in the clause of this solicitation entitled "Buy American Act--Construction Materials under Trade Agreements" (Federal Acquisition Regulation (FAR) clause 52.225-11).

(b) Requests for determination of inapplicability. An offeror requesting a determination regarding the inapplicability of the Buy American Act should submit the request to the Contracting Officer in time to allow a determination before submission of offers. The offeror shall include the information and applicable supporting data required by paragraphs (c) and (d) of FAR clause 52.225-11 in the request. If an offeror has not requested a determination regarding the inapplicability of the Buy American Act or Balance of Payments Program before submitting its offer, or has not received a response to a previous request, the offeror shall include the information and supporting data in the offer.

(c) Evaluation of offers. (1) The Government will evaluate an offer requesting exception to the requirements of the Buy American Act, based on claimed unreasonable cost of domestic construction materials, by adding to the offered price the appropriate percentage of the cost of such foreign construction material, as specified in paragraph (b)(4)(i) of FAR clause 52.225-11.

(2) If evaluation results in a tie between an offeror that requested the substitution of foreign construction material based on unreasonable cost and an offeror that did not request an exception, the Contracting Officer will award to the offeror that did not request an exception based on unreasonable cost.

(d) Alternate offers. (1) When an offer includes foreign construction material, other than designated country or NAFTA country construction material, that is not listed by the Government in this solicitation in paragraph (b)(3) of FAR clause 52.225-11, the offeror also may submit an alternate offer based on use of equivalent domestic, designated country, or NAFTA country construction material.

(2) If an alternate offer is submitted, the offeror shall submit a separate Standard Form 1442 for the alternate offer, and a separate price comparison table prepared in accordance with paragraphs (c) and (d) of FAR clause 52.225-11 for the offer that is based on the use of any foreign construction material for which the Government has not yet determined an exception applies.

(3) If the Government determines that a particular exception requested in accordance with paragraph (c) of FAR clause 52.225-11 does not apply, the Government will evaluate only those offers based on use of the equivalent domestic, designated country, or NAFTA country construction material, and the offeror shall be required to furnish such domestic, designated country, or NAFTA country construction material. An offer based on use of the foreign construction material for which an exception was requested--

(i) Will be rejected as nonresponsive if this acquisition is conducted by sealed bidding; or

(ii) May be accepted if revised during negotiations.

(End of provision)

52.228-1 BID GUARANTEE (SEP 1996)

(a) Failure to furnish a bid guarantee in the proper form and amount, by the time set for opening of bids, may be cause for rejection of the bid.

(b) The bidder shall furnish a bid guarantee in the form of a firm commitment, e.g., bid bond supported by good and sufficient surety or sureties acceptable to the Government, postal money order, certified check, cashier's check, irrevocable letter of credit, or, under Treasury Department regulations, certain bonds or notes of the United States. The Contracting Officer will return bid guarantees, other than bid bonds, (1) to unsuccessful bidders as soon as practicable after the opening of bids, and (2) to the successful bidder upon execution of contractual documents and bonds (including any necessary coinsurance or reinsurance agreements), as required by the bid as accepted.-

(c) The amount of the bid guarantee shall be 20% percent of the bid price or $3,000,000.00, whichever is less.-

(d) If the successful bidder, upon acceptance of its bid by the Government within the period specified for acceptance, fails to execute all contractual documents or furnish executed bond(s) within 10 days after receipt of the forms by the bidder, the Contracting Officer may terminate the contract for default.-

(e) In the event the contract is terminated for default, the bidder is liable for any cost of acquiring the work that exceeds the amount of its bid, and the bid guarantee is available to offset the difference.

(End of clause)

52.228-4507 BID GUARANTEE FORM AND AMOUNT

When bids/proposals exceed $100,000, the offeror shall furnish a separated bid guarantee in accordance with the solicitation provision titled "Bid Guarantee", FAR 52.228-1. In accordance with FAR 28.101-2 the bid guarantee amount shall be a least 20 percent of the "bid price"but shall not exceed $3 million. When the penal sum is expressed as a percentage, a maximum dollar limitation may be stated. If there are option line items on the Pricing Schedule (Schedule B), the term "bid price" is hereby defined as the total bid not to include any amount for line items designated as "options". In bids/proposals that contain "additives", the "bid price" is defined as the total of all bid items including additive line items. FAR 28.106-1 states that a Standard Form (SF) 24 shall be used for the bid bond. In accordance with FAR 28.202(a)(1), corporate sureties utilized must appear on the list contained in the Department of Treasury Circular 570 titled "Companies Holding Certificates of Authority as Acceptable Sureties on Federal Bonds and Acceptable Reinsuring Companies."

52.228-4506 INDIVIDUAL SURETIES IN SUPPORT OF BID BONDS

Bidder/offerors utilizing individual sureties in support of a bid bond shall include a Standard Form (SF) 28 (Affidavit of Individual Surety), accompanied by a pledge of acceptable assets from each person acting as an individual surety, and include these with the SF 24 (Bid Bond), and the bid itself (see clause titled "Pledges of Assets," FAR 52.228-11).

Pledges of acceptable assets shall be in the form of (1) evidence of an escrow account and/or (2) a recorded lien on real estate. If this is an RFP, failure to provide required documentation described herein may cause the offeror to be deemed "unacceptable".

52.233-2 SERVICE OF PROTEST (AUG 1996)

(a) Protests, as defined in section 33.101 of the Federal Acquisition Regulation, that are filed directly with an agency, and copies of any protests that are filed with the General Accounting Office (GAO), shall be served on the Contracting Officer (addressed as follows) by obtaining written and dated acknowledgment of receipt from Mrs. Tina Frazier, C/O Sandy Hall, P.O. Box 532711, CESPL-CT-E, Los Angeles, California 90053-2325/

(b) The copy of any protest shall be received in the office designated above within one day of filing a protest with the GAO.

(End of provision)

52.236-27 SITE VISIT (CONSTRUCTION) (FEB 1995) – ALTERNATE I (FEB 1995)

(a) The clauses at 52.236-2, Differing Site Conditions, and 52.236-3, Site Investigations and Conditions Affecting the Work, will be included in any contract awarded as a result of this solicitation. Accordingly, offerors or quoters are urged and expected to inspect the site where the work will be performed.

(b) An organized site visit has been scheduled for--

Wednesday, 28 May 2003, 08:30 A.M.

(c) Participants will meet at--

The Northeast Corner of Miller Road and Curry Road, Tempe, Arizona 85280

P.O.C.: Louis Uptmor, (602) 243-9282

(End of provision)

This page was intentionally left blank for duplex printing.

Section 00600 - Representations & Certifications

CLAUSES INCORPORATED BY FULL TEXT

52.203-2 CERTIFICATE OF INDEPENDENT PRICE DETERMINATION (APR 1985) 2
52.203-11 CERTIFICATION AND DISCLOSURE REGARDING PAYMENTS TO INFLUENCE CERTAIN FEDERAL TRANSACTIONS (APR 1991) 3
52.204-3 TAXPAYER IDENTIFICATION (OCT 1998) 4
52.204-6 DATA UNIVERSAL NUMBERING SYSTEM (DUNS) NUMBER (JUN 99) 5
52.209-5 CERTIFICATION REGARDING DEBARMENT, SUSPENSION, PROPOSED DEBARMENT, AND OTHER RESPONSIBILITY MATTERS (DEC 2001) 6
52.219-1 SMALL BUSINESS PROGRAM REPRESENTATIONS (APR 2002) - ALTERNATE I (APR 2002) 8
52.219-2 EQUAL LOW BIDS. (OCT 1995) 10
52.219-8 UTILIZATION OF SMALL BUSINESS CONCERNS (OCT 2000) 11
52.222-21 PROHIBITION OF SEGREGATED FACILITIES (FEB 1999) 13
52.222-22 PREVIOUS CONTRACTS AND COMPLIANCE REPORTS (FEB 1999) 13
52.223-13 CERTIFICATION OF TOXIC CHEMICAL RELEASE REPORTING (OCT 2000) 14
252.204-7001 COMMERCIAL AND GOVERNMENT ENTITY (CAGE) CODE REPORTING (AUG 1999) 15
252.209-7001 DISCLOSURE OF OWNERSHIP OR CONTROL BY THE GOVERNMENT OF A TERRORIST COUNTRY (MAR 1998) 15
252.247-7022 REPRESENTATION OF EXTENT OF TRANSPORTATION BY SEA (AUG 1992) 16

52.203-2 CERTIFICATE OF INDEPENDENT PRICE DETERMINATION (APR 1985)

(a) The offeror certifies that --

(a) The prices in this offer have been arrived at independently, without, for the purpose of restricting competition, any consultation, communication, or agreement with any other offeror or competitor relating to –

(i) Those prices,

(1) The intention to submit an offer, or

(iii) The methods of factors used to calculate the prices offered:

(2) The prices in this offer have not been and will not be knowingly disclosed by the offeror, directly or indirectly, to any other offeror or competitor before bid opening (in the case of a sealed bid solicitation) or contract award (in the case of a negotiated solicitation) unless otherwise required by law; and

(3) No attempt has been made or will be made by the offeror to induce any other concern to submit or not to submit an offer for the purpose of restricting competition.

(b) Each signature on the offer is considered to be a certification by the signatory that the signatory --

(1) Is the person in the offeror's organization responsible for determining the prices offered in this bid or proposal, and that the signatory has not participated and will not participate in any action contrary to subparagraphs (a)(1) through (a)(3) of this provision; or

(2) (i) Has been authorized, in writing, to act as agent for the following principals in certifying that those principals have not participated, and will not participate in any action contrary to subparagraphs (a)(1) through (a)(3) of this provison _____ (insert full name of person(s) in the offeror's organization responsible for determining the prices offered in this bid or proposal, and the title of his or her position in the offeror's organization);

(ii) As an authorized agent, does certify that the principals named in subdivision (b)(2)(i) above have not participated, and will not participate, in any action contrary to subparagraphs (a)(1) through (a)(3) above; and

(iii) As an agent, has not personally participated, and will not participate, in any action contrary to subparagraphs (a)(1) through (a)(3) of this provision.

(c) If the offeror deletes or modifies subparagraph (a)(2) of this provision, the offeror must furnish with its offer a signed statement setting forth in detail the circumstances of the disclosure.

(End of clause)

52.203-11 CERTIFICATION AND DISCLOSURE REGARDING PAYMENTS TO INFLUENCE CERTAIN FEDERAL TRANSACTIONS (APR 1991)

(a) The definitions and prohibitions contained in the clause, at FAR 52.203-12, Limitation on Payments to Influence Certain Federal Transactions, included in this solicitation, are hereby incorporated by reference in paragraph (b) of this Certification.

(b) The offeror, by signing its offer, hereby certifies to the best of his or her knowledge and belief that on or after December 23, 1989,--

(1) No Federal appropriated funds have been paid or will be paid to any person for influencing or attempting to influence an officer or employee of any agency, a Member of Congress, an officer or employee of Congress, or an employee of a Member of Congress on his or her behalf in connection with the awarding of any Federal contract, the making of any Federal grant, the making of any Federal loan, the entering into of any cooperative agreement, and the extension, continuation, renewal, amendment or modification of any Federal contract, grant, loan, or cooperative agreement;

(2) If any funds other than Federal appropriated funds (including profit or fee received under a covered Federal transaction) have been paid, or will be paid to any person for influencing or attempting to influence an officer or employee of any agency, a Member of Congress, an officer or employee of Congress or an employee of a Member of Congress on his or her behalf in connection with this solicitation, the offeror shall complete and submit, with its offer, OMB standard form LLL, Disclosure of Lobbying Activities, to the Contracting Officer; and

(3) He or she will include the language of this certification in all subcontract awards at any tier and require that all recipients of subcontract awards in excess of $100,000 shall certify and disclose accordingly.

(b) Submission of this certification and disclosure is a prerequisite for making or entering into this contract imposed by section 1352, title 31, United States Code. Any person who makes an expenditure prohibited under this provision, shall be subject to a civil penalty of not less than $10,000, and not more than $100,000, for each such failure.

(End of provision)

52.204-3 TAXPAYER IDENTIFICATION (OCT 1998)

(a) Definitions.

"Common parent," as used in this provision, means that corporate entity that owns or controls an affiliated group of corporations that files its Federal income tax returns on a consolidated basis, and of which the offeror is a member.

"Taxpayer Identification Number (TIN)," as used in this provision, means the number required by the Internal Revenue Service (IRS) to be used by the offeror in reporting income tax and other returns. The TIN may be either a Social Security Number or an Employer Identification Number.

(b) All offerors must submit the information required in paragraphs (d) through (f) of this provision to comply with debt collection requirements of 31 U.S.C. 7701(c) and 3325(d), reporting requirements of 26 U.S.C. 6041, 6041A, and 6050M, and implementing regulations issued by the IRS. If the resulting contract is subject to the payment reporting requirements described in Federal Acquisition Regulation (FAR) 4.904, the failure or refusal by the offeror to furnish the information may result in a 31 percent reduction of payments otherwise due under the contract.

(c) The TIN may be used by the Government to collect and report on any delinquent amounts arising out of the offeror's relationship with the Government (31 U.S.C. 7701(c)(3)). If the resulting contract is subject to the payment reporting requirements described in FAR 4.904, the TIN provided hereunder may be matched with IRS records to verify the accuracy of the offeror's TIN.

(d) Taxpayer Identification Number (TIN).

___ TIN:._____

___ TIN has been applied for.

___ TIN is not required because:

___ Offeror is a nonresident alien, foreign corporation, or foreign partnership that does not have income effectively connected with the conduct of a trade or business in the United States and does not have an office or place of business or a fiscal paying agent in the United States;

___ Offeror is an agency or instrumentality of a foreign government;

___ Offeror is an agency or instrumentality of the Federal Government.

(e) Type of organization.

___ Sole proprietorship;

___ Partnership;

___ Corporate entity (not tax-exempt); (State:_____)

___ Corporate entity (tax-exempt); (State:_____)

___ Government entity (Federal, State, or local);

___ Foreign government;

___ International organization per 26 CFR 1.6049-4;

___ Other _____

(f) Common parent.

___ Offeror is not owned or controlled by a common parent as defined in paragraph (a) of this provision.

___ Name and TIN of common parent:

Name _____

TIN _____

(End of provision)

52.204-6 DATA UNIVERSAL NUMBERING SYSTEM (DUNS) NUMBER (JUN 99)

(a) The offeror shall enter, in the block with its name and address on the cover page of its offer, the annotation "DUNS" followed by the DUNS number that identifies the offeror's name and address exactly as stated in the offer.

(b) If the offeror does not have a DUNS number, it should contact Dun and Bradstreet directly to obtain one. A DUNS number will be provided immediately by telephone at no charge to the offeror. For information on obtaining a DUNS number, the offeror, if located within the United States, should call Dun and Bradstreet at 1-800-333-0505. The offeror should be prepared to provide the following information:

(1) Company name.

(2) Company address.

(3) Company telephone number.

(4) Line of business.

(5) Chief executive officer/key manager.

(6) Date the company was started.

(7) Number of people employed by the company.

(8) Company affiliation.

(c) Offerors located outside the United States may obtain the location and phone number of the local Dun and Bradstreet Information Services office from the Internet Home Page at http://www.customerservice@dnb.com. If an offeror is unable to locate a local service center, it may send an e-mail to Dun and Bradstreet at globalinfo@mail.dnb.com.

(End of provision)

52.209-5 CERTIFICATION REGARDING DEBARMENT, SUSPENSION, PROPOSED DEBARMENT, AND OTHER RESPONSIBILITY MATTERS (DEC 2001)

(a)(1) The Offeror certifies, to the best of its knowledge and belief, that--

(i) The Offeror and/or any of its Principals--

(A) Are ( ) are not ( ) presently debarred, suspended, proposed for debarment, or declared ineligible for the award of contracts by any Federal agency;

(B) Have ( ) have not ( ), within a three-year period preceding this offer, been convicted of or had a civil judgment rendered against them for: commission of fraud or a criminal offense in connection with obtaining, attempting to obtain, or performing a public (Federal, state, or local) contract or subcontract; violation of Federal or state antitrust statutes relating to the submission of offers; or commission of embezzlement, theft, forgery, bribery, falsification or destruction of records, making false statements, tax evasion, or receiving stolen property; and

(C) Are ( ) are not ( ) presently indicted for, or otherwise criminally or civilly charged by a governmental entity with, commission of any of the offenses enumerated in subdivision (a)(1)(i)(B) of this provision.

(ii) The Offeror has ( ) has not ( ), within a three-year period preceding this offer, had one or more contracts terminated for default by any Federal agency.

(2) "Principals," for the purposes of this certification, means officers; directors; owners; partners; and, persons having primary management or supervisory responsibilities within a business entity (e.g., general manager; plant manager; head of a subsidiary, division, or business segment, and similar positions).

THIS CERTIFICATION CONCERNS A MATTER WITHIN THE JURISDICTION OF AN AGENCY OF THE UNITED STATES AND THE MAKING OF A FALSE, FICTITIOUS, OR FRAUDULENT CERTIFICATION MAY RENDER THE MAKER SUBJECT TO PROSECUTION UNDER SECTION 1001, TITLE 18, UNITED STATES CODE.

(b) The Offeror shall provide immediate written notice to the Contracting Officer if, at any time prior to contract award, the Offeror learns that its certification was erroneous when submitted or has become erroneous by reason of changed circumstances.

(c) A certification that any of the items in paragraph (a) of this provision exists will not necessarily result in withholding of an award under this solicitation. However, the certification will be considered in connection with a determination of the Offeror's responsibility. Failure of the Offeror to furnish a certification or provide such additional information as requested by the Contracting Officer may render the Offeror nonresponsible.

(d) Nothing contained in the foregoing shall be construed to require establishment of a system of records in order to render, in good faith, the certification required by paragraph (a) of this provision. The knowledge and information of an Offeror is not required to exceed that which is normally possessed by a prudent person in the ordinary course of business dealings.

(e) The certification in paragraph (a) of this provision is a material representation of fact upon which reliance was placed when making award. If it is later determined that the Offeror knowingly rendered an erroneous certification, in addition to other remedies available to the Government, the Contracting Officer may terminate the contract resulting from this solicitation for default.

(End of provision)

52.219-1 SMALL BUSINESS PROGRAM REPRESENTATIONS (APR 2002) - ALTERNATE I (APR 2002)

(a)(1) The North American Industry Classification System (NAICS) code for this acquisition is 237990.

(2) The small business size standard is $28.5M

(3) The small business size standard for a concern which submits an offer in its own name, other than on a construction or service contract, but which proposes to furnish a product which it did not itself manufacture, is 500 employees.

(b) Representations. (1) The offeror represents as part of its offer that it ( ) is, ( ) is not a small business concern.

(2) (Complete only if the offeror represented itself as a small business concern in paragraph (b)(1) of this provision.) The offeror represents, for general statistical purposes, that it ( ) is, ( ) is not a small disadvantaged business concern as defined in 13 CFR 124.1002.

(3) (Complete only if the offeror represented itself as a small business concern in paragraph (b)(1) of this provision.) The offeror represents as part of its offer that it ( ) is, ( ) is not a women-owned small business concern.

(4) (Complete only if the offeror represented itself as a small business concern in paragraph (b)(1) of this provision.) The offeror represents as part of its offer that it ( ) is, ( ) is not a veteran-owned small business concern.

(5) (Complete only if the offeror represented itself as a veteran-owned small business concern in paragraph (b)(4) of this provision.) The offeror represents as part of its offer that it ( ) is, ( ) is not a service-disabled veteran-owned small business concern.

(6) [Complete only if the offeror represented itself as a small business concern in paragraph (b)(1) of this provision.] The offeror represents, as part of its offer, that--

(i) It ( ) is, ( ) is not a HUBZone small business concern listed, on the date of this representation, on the List of Qualified HUBZone Small Business Concerns maintained by the Small Business Administration, and no material change in ownership and control, principal office, or HUBZone employee percentage has occurred since it was certified by the Small Business Administration in accordance with 13 CFR part 126; and

(ii) It ( ) is, ( ) is not a joint venture that complies with the requirements of 13 CFR part 126, and the representation in paragraph (b)(6)(i) of this provision is accurate for the HUBZone small business concern or concerns that are participating in the joint venture. (The offeror shall enter the name or names of the HUBZone small business concern or

concerns that are participating in the joint venture:_____.) Each HUBZone small business concern participating in the joint venture shall submit a separate signed copy of the HUBZone representation.

(7) (Complete if offeror represented itself as disadvantaged in paragraph (b)(2) of this provision.) The offeror shall check the category in which its ownership falls:

____ Black American.

____ Hispanic American.

____ Native American (American Indians, Eskimos, Aleuts, or Native Hawaiians).

____ Asian-Pacific American (persons with origins from Burma, Thailand, Malaysia, Indonesia, Singapore, Brunei, Japan, China, Taiwan, Laos, Cambodia (Kampuchea), Vietnam, Korea, The Philippines, U.S. Trust Territory of the Pacific Islands (Republic of Palau), Republic of the Marshall Islands, Federated States of Micronesia, the Commonwealth of the Northern Mariana Islands, Guam, Samoa, Macao, Hong Kong, Fiji, Tonga, Kiribati, Tuvalu, or Nauru).

____ Subcontinent Asian (Asian-Indian) American (persons with origins from India, Pakistan, Bangladesh, Sri Lanka, Bhutan, the Maldives Islands, or Nepal).

____ Individual/concern, other than one of the preceding.

(c) Definitions. As used in this provision--

Service-disabled veteran-owned small business concern--

(1) Means a small business concern--

(i) Not less than 51 percent of which is owned by one or more service-disabled veterans or, in the case of any publicly owned business, not less than 51 percent of the stock of which is owned by one or more service-disabled veterans; and

(ii) The management and daily business operations of which are controlled by one or more service-disabled veterans or, in the case of a veteran with permanent and severe disability, the spouse or permanent caregiver of such veteran.

(2) Service-disabled veteran means a veteran, as defined in 38 U.S.C. 101(2), with a disability that is service-connected, as defined in 38 U.S.C. 101(16).

"Small business concern," means a concern, including its affiliates, that is independently owned and operated, not dominant in the field of operation in which it is bidding on Government contracts, and qualified as a small business under the criteria in 13 CFR Part 121 and the size standard in paragraph (a) of this provision.

Veteran-owned small business concern means a small business concern--

(1) Not less than 51 percent of which is owned by one or more veterans (as defined at 38 U.S.C. 101(2)) or, in the case of any publicly owned business, not less than 51 percent of the stock of which is owned by one or more veterans; and

(2) The management and daily business operations of which are controlled by one or more veterans.

"Women-owned small business concern," means a small business concern --

(1) That is at least 51 percent owned by one or more women or, in the case of any publicly owned business, at least 51 percent of the stock of which is owned by one or more women; or

(2) Whose management and daily business operations are controlled by one or more women.

(d) Notice.

(1) If this solicitation is for supplies and has been set aside, in whole or in part, for small business concerns, then the clause in this solicitation providing notice of the set-aside contains restrictions on the source of the end items to be furnished.

(2) Under 15 U.S.C. 645(d), any person who misrepresents a firm's status as a small, HUBZone small, small disadvantaged, or women-owned small business concern in order to obtain a contract to be awarded under the preference programs established pursuant to section 8(a), 8(d), 9, or 15 of the Small Business Act or any other provision of Federal law that specifically references section 8(d) for a definition of program eligibility, shall--

(i) Be punished by imposition of fine, imprisonment, or both;

(ii) Be subject to administrative remedies, including suspension and debarment; and

(iii) Be ineligible for participation in programs conducted under the authority of the Act.

(End of provision)

52.219-2 EQUAL LOW BIDS. (OCT 1995)

(a) This provision applies to small business concerns only.

(b) The bidder's status as a labor surplus area (LSA) concern may affect entitlement to award in case of tie bids. If the bidder wishes to be considered for this priority, the bidder must identify, in the following space, the LSA in which the costs to be incurred on

account of manufacturing or production (by the bidder or the first-tier subcontractors) amount to more than 50 percent of the contract price.

_____
_____
_____
_____

(c) Failure to identify the labor surplus area as specified in paragraph (b) of this provision will preclude the bidder from receiving priority consideration. If the bidder is awarded a contract as a result of receiving priority consideration under this provision and would not have otherwise received award, the bidder shall perform the contract or cause the contract to be performed in accordance with the obligations of an LSA concern.

52.219-8 UTILIZATION OF SMALL BUSINESS CONCERNS (OCT 2000)

(a) It is the policy of the United States that small business concerns, veteran-owned small business concerns, service-disabled veteran-owned small business concerns, HUBZone small business concerns, small disadvantaged business concerns, and women-owned small business concerns shall have the maximum practicable opportunity to participate in performing contracts let by any Federal agency, including contracts and subcontracts for subsystems, assemblies, components, and related services for major systems. It is further the policy of the United States that its prime contractors establish procedures to ensure the timely payment of amounts due pursuant to the terms of their subcontracts with small business concerns, veteran-owned small business concerns, service-disabled veteran-owned small business concerns, HUBZone small business concerns, small disadvantaged business concerns, and women-owned small business concerns.

(b) The Contractor hereby agrees to carry out this policy in the awarding of subcontracts to the fullest extent consistent with efficient contract performance. The Contractor further agrees to cooperate in any studies or surveys as may be conducted by the United States Small Business Administration or the awarding agency of the United States as may be necessary to determine the extent of the Contractor's compliance with this clause.

Definitions. As used in this contract--

HUBZone small business concern means a small business concern that appears on the List of Qualified HUBZone Small Business Concerns maintained by the Small Business Administration.

Service-disabled veteran-owned small business concern--

(1) Means a small business concern--

(i) Not less than 51 percent of which is owned by one or more service-disabled veterans or, in the case of any publicly owned business, not less than 51 percent of the stock of which is owned by one or more service-disabled veterans; and

(ii) The management and daily business operations of which are controlled by one or more service-disabled veterans or, in the case of a veteran with permanent and severe disability, the spouse or permanent caregiver of such veteran.

(2) Service-disabled veteran means a veteran, as defined in 38 U.S.C. 101(2), with a disability that is service-connected, as defined in 38 U.S.C. 101(16).

Small business concern means a small business as defined pursuant to Section 3 of the Small Business Act and relevant regulations promulgated pursuant thereto.

Small disadvantaged business concern means a small business concern that represents, as part of its offer that--

(1) It has received certification as a small disadvantaged business concern consistent with 13 CFR part 124, subpart B;

(2) No material change in disadvantaged ownership and control has occurred since its certification;

(3) Where the concern is owned by one or more individuals, the net worth of each individual upon whom the certification is based does not exceed $750,000 after taking into account the applicable exclusions set forth at 13 CFR 124.104(c)(2); and

(4) It is identified, on the date of its representation, as a certified small disadvantaged business in the database maintained by the Small Business Administration (PRO-Net).

Veteran-owned small business concern means a small business concern--

(1) Not less than 51 percent of which is owned by one or more veterans (as defined at 38 U.S.C. 101(2)) or, in the case of any publicly owned business, not less than 51 percent of the stock of which is owned by one or more veterans; and

(2) The management and daily business operations of which are controlled by one or more veterans.

Women-owned small business concern means a small business concern--

(1) That is at least 51 percent owned by one or more women, or, in the case of any publicly owned business, at least 51 percent of the stock of which is owned by one or more women; and

(2) Whose management and daily business operations are controlled by one or more women.

(d) Contractors acting in good faith may rely on written representations by their subcontractors regarding their status as a small business concern, a veteran-owned small business concern, a service-disabled veteran-owned small business concern, a HUBZone small business concern, a small disadvantaged business concern, or a women-owned small business concern.

(End of clause)

52.222-21 PROHIBITION OF SEGREGATED FACILITIES (FEB 1999)

(a) Segregated facilities, as used in this clause, means any waiting rooms, work areas, rest rooms and wash rooms, restaurants and other eating areas, time clocks, locker rooms and other storage or dressing areas, parking lots, drinking fountains, recreation or entertainment areas, transportation, and housing facilities provided for employees, that are segregated by explicit directive or are in fact segregated on the basis of race, color, religion, sex, or national origin because of written or oral policies or employee custom. The term does not include separate or single-user rest rooms or necessary dressing or sleeping areas provided to assure privacy between the sexes.

(b) The Contractor agrees that it does not and will not maintain or provide for its employees any segregated facilities at any of its establishments, and that it does not and will not permit its employees to perform their services at any location under its control where segregated facilities are maintained. The Contractor agrees that a breach of this clause is a violation of the Equal Opportunity clause in this contract.

(c) The Contractor shall include this clause in every subcontract and purchase order that is subject to the Equal Opportunity clause of this contract.

(End of clause)

52.222-22 PREVIOUS CONTRACTS AND COMPLIANCE REPORTS (FEB 1999)

The offeror represents that --

(a) ( ) It has, ( ) has not participated in a previous contract or subcontract subject to the Equal Opportunity clause of this solicitation;

(b) ( ) It has, ( ) has not, filed all required compliance reports; and

(c) Representations indicating submission of required compliance reports, signed by proposed subcontractors, will be obtained before subcontract awards.

(End of provision)

52.223-13 CERTIFICATION OF TOXIC CHEMICAL RELEASE REPORTING (OCT 2000)

(a) Submission of this certification is a prerequisite for making or entering into this contract imposed by Executive Order 12969, August 8, 1995.

(b) By signing this offer, the offeror certifies that--

(1) As the owner or operator of facilities that will be used in the performance of this contract that are subject to the filing and reporting requirements described in section 313 of the Emergency Planning and Community Right-to-Know Act of 1986 (EPCRA) (42 U.S.C. 11023) and section 6607 of the Pollution Prevention Act of 1990 (PPA) (42 U.S.C. 13106), the offeror will file and continue to file for such facilities for the life of the contract the Toxic Chemical Release Inventory Form (Form R) as described in sections 313(a) and (g) of EPCRA and section 6607 of PPA; or

(2) None of its owned or operated facilities to be used in the performance of this contract is subject to the Form R filing and reporting requirements because each such facility is exempt for at least one of the following reasons: (Check each block that is applicable.)

( ) (i) The facility does not manufacture, process or otherwise use any toxic chemicals listed under section 313(c) of EPCRA, 42 U.S.C. 11023(c);

( ) (ii) The facility does not have 10 or more full-time employees as specified in section 313.(b)(1)(A) of EPCRA 42 U.S.C. 11023(b)(1)(A);

( ) (iii) The facility does not meet the reporting thresholds of toxic chemicals established under section 313(f) of EPCRA, 42 U.S.C. 11023(f) (including the alternate thresholds at 40 CFR 372.27, provided an appropriate certification form has been filed with EPA);

( ) (iv) The facility does not fall within Standard Industrial Classification Code (SIC) major groups 20 through 39 or their corresponding North American Industry Classification System (NAICS) sectors 31 through 33; or

( ) (v) The facility is not located within any State of the United States, the District of Columbia, the Commonwealth of Puerto Rico, Guam, American Samoa, the United States Virgin Islands, the Northern Mariana Islands, or any other territory or possession over which the United States has jurisdiction.

(End of clause)

252.204-7001 COMMERCIAL AND GOVERNMENT ENTITY (CAGE) CODE REPORTING (AUG 1999)

(a) The offeror is requested to enter its CAGE code on its offer in the block with its name and address. The CAGE code entered must be for that name and address. Enter “CAGE” before the number.

(b) If the offeror does not have a CAGE code, it may ask the Contracting Officer to request one from the Defense Logistics Information Service (DLIS). The Contracting Officer will--

(1) Ask the Contractor to complete section B of a DD Form 2051, Request for Assignment of a Commercial and Government Entity (CAGE) Code;

(2) Complete section A and forward the form to DLIS; and

(3) Notify the Contractor of its assigned CAGE code.

(c) Do not delay submission of the offer pending receipt of a CAGE code.

(End of provision)

252.209-7001 DISCLOSURE OF OWNERSHIP OR CONTROL BY THE GOVERNMENT OF A TERRORIST COUNTRY (MAR 1998)

(a) "Definitions."

As used in this provision --

(a) "Government of a terrorist country" includes the state and the government of a terrorist country, as well as any political subdivision, agency, or instrumentality thereof.

(2) "Terrorist country" means a country determined by the Secretary of State, under section 6(j)(1)(A) of the Export Administration Act of 1979 (50 U.S.C. App. 2405(j)(i)(A)), to be a country the government of which has repeatedly provided support for such acts of international terrorism. As of the date of this provision, terrorist countries include: Cuba, Iran, Iraq, Libya, North Korea, Sudan, and Syria.

(3) "Significant interest" means --

(i) Ownership of or beneficial interest in 5 percent or more of the firm's or subsidiary's

securities. Beneficial interest includes holding 5 percent or more of any class of the firm's securities in "nominee shares," "street names," or some other method of holding securities that does not disclose the beneficial owner;

(ii) Holding a management position in the firm, such as a director or officer;

(iii) Ability to control or influence the election, appointment, or tenure of directors or officers in the firm;

(iv) Ownership of 10 percent or more of the assets of a firm such as equipment, buildings, real estate, or other tangible assets of the firm; or

(v) Holding 50 percent or more of the indebtness of a firm.

(b) "Prohibition on award."

In accordance with 10 U.S.C. 2327, no contract may be awarded to a firm or a subsidiary of a firm if the government of a terrorist country has a significant interest in the firm or subsidiary or, in the case of a subsidiary, the firm that owns the subsidiary, unless a waiver is granted by the Secretary of Defense.

(c) "Disclosure."

If the government of a terrorist country has a significant interest in the Offeror or a subsidiary of the Offeror, the Offeror shall disclosure such interest in an attachment to its offer. If the Offeror is a subsidiary, it shall also disclose any significant interest the government of a terrorist country has in any firm that owns or controls the subsidiary. The disclosure shall include --

(1) Identification of each government holding a significant interest; and

(2) A description of the significant interest held by each government.

(End of provision)

252.247-7022 REPRESENTATION OF EXTENT OF TRANSPORTATION BY SEA (AUG 1992)

(a) The Offeror shall indicate by checking the appropriate blank in paragraph (b) of this provision whether transportation of supplies by sea is anticipated under the resultant contract. The term supplies is defined in the Transportation of Supplies by Sea clause of this solicitation.

(b) Representation. The Offeror represents that it:

____ (1) Does anticipate that supplies will be transported by sea in the performance of any contract or subcontract resulting from this solicitation.

____ (2) Does not anticipate that supplies will be transported by sea in the performance of any contract or subcontract resulting from this solicitation.

(c) Any contract resulting from this solicitation will include the Transportation of Supplies by Sea clause. If the Offeror represents that it will not use ocean transportation, the resulting contract will also include the Defense FAR Supplement clause at 252.247-7024, Notification of Transportation of Supplies by Sea.

(End of provision)

This page was intentionally left blank for duplex printing.

Section 00700 - Contract Clauses

CLAUSES INCORPORATED BY FULL TEXT

52.202-1 DEFINITIONS (MAY 2001) --ALTERNATE I (MAR 2001) 5
52.203-3 GRATUITIES (APR 1984) 6
52.203-5 COVENANT AGAINST CONTINGENT FEES (APR 1984) 6
52.203-7 ANTI-KICKBACK PROCEDURES. (JUL 1995) 7
52.203-8 CANCELLATION, RESCISSION, AND RECOVERY OF FUNDS FOR ILLEGAL OR IMPROPER ACTIVITY (JAN 1997) 9
52.203-10 PRICE OR FEE ADJUSTMENT FOR ILLEGAL OR IMPROPER ACTIVITY (JAN 1997) 10
52.203-12 LIMITATION ON PAYMENTS TO INFLUENCE CERTAIN FEDERAL TRANSACTIONS (JUN 1997) 11
52.204-4 PRINTED OR COPIED DOUBLE-SIDED ON RECYCLED PAPER (AUG 2000) 16
52.204-6 DATA UNIVERSAL NUMBERING SYSTEM (DUNS) NUMBER (JUN 99) 18
52.209-6 Protecting the Government's Interest When Subcontracting With Contractors Debarred, Suspended, or Proposed for Debarment (JUL 1995) 19
52.214-26 Audit and Records--Sealed Bidding. (OCT 1997) 19
52.214-27 Price Reduction for Defective Cost or Pricing Data - Modifications - Sealed Bidding. (OCT 1997) 20
52.214-28 Subcontractor Cost or Pricing Data - Modifications - Sealed Bidding. (OCT 1997) 23
52.219-14 LIMITATIONS ON SUBCONTRACTING (DEC 1996) 23
52.219-18 NOTIFICATION OF COMPETITION LIMITED TO ELIGIBLE 8(A) CONCERNS (JUN 1999) 24
52.222-3 Convict Labor (Aug 1996) 25
52.222-4 Contract Work Hours and Safety Standards Act - Overtime Compensation. (SEP 2000) 26
52.222-6 DAVIS-BACON ACT (FEB 1995) 27
52.222-7 WITHHOLDING OF FUNDS (FEB 1988) 29
52.222-8 PAYROLLS AND BASIC RECORDS (FEB 1988) 29
52.222-9 APPRENTICES AND TRAINEES (FEB 1988) 31
52.222-10 COMPLIANCE WITH COPELAND ACT REQUIREMENTS (FEB 1988) 32
52.222-11 SUBCONTRACTS (LABOR STANDARDS (FEB 1988) 32
52.222-12 CONTRACT TERMINATION--DEBARMENT (FEB 1988) 33
52.222-13 COMPLIANCE WITH DAVIS-BACON AND RELATED ACT REGULATIONS (FEB 1988) 33
52.222-14 DISPUTES CONCERNING LABOR STANDARDS (FEB 1988) 33
52.222-15 CERTIFICATION OF ELIGIBILITY (FEB 1988) 34
52.222-26 EQUAL OPPORTUNITY (APR 2002) 34

52.222-27 AFFIRMATIVE ACTION COMPLIANCE REQUIREMENTS FOR CONSTRUCTION (FEB 1999) 36
52.222-36 AFFIRMATIVE ACTION FOR WORKERS WITH DISABILITIES (JUN 1998) 42
52.222-37 EMPLOYMENT REPORTS ON DISABLED VETERANS AND VETERANS OF THE VIETNAM ERA (JAN 1999) 43
52.223-5 POLLUTION PREVENTION AND RIGHT-TO-KNOW INFORMATION (APR 1998) 44
52.223-6 DRUG-FREE WORKPLACE (MAY 2001) 45
52.223-14 TOXIC CHEMICAL RELEASE REPORTING (OCT 2000) 47
52.225-9 BUY AMERICAN ACT—CONSTRUCTION MATERIALS (MAY 2002) 48
52.225-11 BUY AMERICAN ACT--CONSTRUCTION MATERIALS UNDER TRADE AGREEMENTS (JUL 2002) 51
52.227-1 AUTHORIZATION AND CONSENT (JUL 1995) 55
52.227-2 NOTICE AND ASSISTANCE REGARDING PATENT AND COPYRIGHT INFRINGEMENT (AUG 1996) 56
52.227-4 PATENT INDEMNITY--CONSTRUCTION CONTRACTS (APR 1984) . 56
52.227-11 PATENT RIGHTS--RETENTION BY THE CONTRACTOR (SHORT FORM) (JUN 1997) 57
52.228-2 ADDITIONAL BOND SECURITY (OCT 1997) 63
52.228-5 INSURANCE--WORK ON A GOVERNMENT INSTALLATION (JAN 1997) 63
52.228-11 PLEDGES OF ASSETS (FEB 1992) 64
52.229-3 FEDERAL, STATE, AND LOCAL TAXES (JAN 1991) 64
52.229-5 TAXES--CONTRACTS PERFORMED IN U.S. POSSESSIONS OR PUERTO RICO (APR 1984) 66
52.232-5 PAYMENTS UNDER FIXED-PRICE CONSTRUCTION CONTRACTS (MAY 1997) 66
52.232-17 INTEREST (JUNE 1996) 69
52.232-23 ASSIGNMENT OF CLAIMS (JAN 1986) 70
52.232-27 PROMPT PAYMENT FOR CONSTRUCTION CONTRACTS (FEB 2002) 70
52.233-1 Disputes. (JUL 2002) 79
52.233-3 PROTEST AFTER AWARD (AUG. 1996) 80
52.236-2 DIFFERING SITE CONDITIONS (APR 1984) 81
52.236-5 MATERIAL AND WORKMANSHIP (APR 1984) 83
52.236-6 SUPERINTENDENCE BY THE CONTRACTOR (APR 1984) 84
52.236-7 PERMITS AND RESPONSIBILITIES (NOV 1991) 84
52.236-8 OTHER CONTRACTS (APR 1984) 84
52.236-9 PROTECTION OF EXISTING VEGETATION, STRUCTURES, EQUIPMENT, UTILITIES, AND IMPROVEMENTS (APR 1984) 85
52.236-10 OPERATIONS AND STORAGE AREAS (APR 1984) 85
52.236-11 USE AND POSSESSION PRIOR TO COMPLETION (APR 1984) 86
52.236-12 CLEANING UP (APR 1984) 86

52.236-13 ACCIDENT PREVENTION (NOV 1991) – ALTERNATE I (NOV 1991) 87
52.236-15 SCHEDULES FOR CONSTRUCTION CONTRACTS (APR 1984) 88
52.236-17 LAYOUT OF WORK (APR 1984) 89
52.236-21 SPECIFICATIONS AND DRAWINGS FOR CONSTRUCTION (FEB 1997) - ALTERNATE I (APR 1984 89
52.236-26 PRECONSTRUCTION CONFERENCE (FEB 1995) 91
52.242-13 BANKRUPTCY (JUL 1995) 91
52.242-14 SUSPENSION OF WORK (APR 1984) 91
52.243-4 CHANGES (AUG 1987) 92
52.245-2 GOVERNMENT PROPERTY (FIXED-PRICE CONTRACTS) (DEC 1989) 93
52.248-3 VALUE ENGINEERING--CONSTRUCTION (FEB 2000) - ALTERNATE I (APR 1984) 97
52.249-2 TERMINATION FOR CONVENIENCE OF THE GOVERNMENT (FIXED-PRICE) (SEP 1996) - ALTERNATE I (SEP 1996) 100
52.249-10 DEFAULT (FIXED-PRICE CONSTRUCTION) (APR 1984) 104
52.252-4 ALTERATIONS IN CONTRACT (APR 1984) 105
52.252-6 AUTHORIZED DEVIATIONS IN CLAUSES (APR 1984) 105
52.253-1 COMPUTER GENERATED FORMS (JAN 1991) 106
252.201-7000 CONTRACTING OFFICER'S REPRESENTATIVE (DEC 1991) 106
252.203-7001 PROHIBITION ON PERSONS CONVICTED OF FRAUD OR OTHER DEFENSE-CONTRACT-RELATED FELONIES (MAR 1999) 107
252.203-7002 DISPLAY OF DOD HOTLINE POSTER (DEC 1991) 108
252.204-7000 DISCLOSURE OF INFORMATION (DEC 1991) 109
252.204-7003 CONTROL OF GOVERNMENT PERSONNEL WORK PRODUCT (APR 1992) 109
252.205-7000 PROVISION OF INFORMATION TO COOPERATIVE AGREEMENT HOLDERS (DEC 1991) 109
252.209-7000 ACQUISITION FROM SUBCONTRACTORS SUBJECT TO ONSITE INSPECTION UNDER THE INTERMEDIATE-RANGE NUCLEAR FORCES (INF) TREATY (NOV 1995) 110
252.219-7009 SECTION 8(A) DIRECT AWARD (MAR 2002) 110
252.219-7010 ALTERNATE A (JUN 1998) 111
252.223-7004 DRUG-FREE WORK FORCE (SEP 1988) 112
252.225-7012 Preference for Certain Domestic Commodities (APR 2002) 114
252.225-7016 RESTRICTION ON ACQUISITION OF BALL AND ROLLER BEARINGS (AUG 1998) 115
252.225-7026 REPORTING OF CONTRACT PERFORMANCE OUTSIDE THE UNITED STATES (JUN 2000) 116
252.225-7031 SECONDARY ARAB BOYCOTT OF ISRAEL (JUN 1992) 118
252.227-7000 Non-estoppel. (OCT 1966) 119
252.227-7022 GOVERNMENT RIGHTS (UNLIMITED) (MAR 1979) 119
252.227-7023 DRAWINGS AND OTHER DATA TO BECOME PROPERTY OF GOVERNMENT. (MAR 1979) 119
252.227-7033 RIGHTS IN SHOP DRAWINGS (APR 1966) 120

252.231-7000 SUPPLEMENTAL COST PRINCIPLES (DEC 1991)..... 120
252.236-7000 MODIFICATION PROPOSALS - PRICE BREAKDOWN. (DEC 1991) 120
252.236-7008 CONTRACT PRICES - BIDDING SCHEDULES. (DEC 1991)..... 121
252.242-7000 POSTAWARD CONFERENCE (DEC 1991) 121
252.243-7001 PRICING OF CONTRACT MODIFICATIONS (DEC 1991) 121
252.243-7002 REQUESTS FOR EQUITABLE ADJUSTMENT (MAR 1998)..... 122
252.247-7024 Notification of Transportation of Supplies by Sea (MAR 2000) 123

52.202-1 DEFINITIONS (MAY 2001) --ALTERNATE I (MAR 2001)

(a) Agency head or head of the agency means the Secretary (Attorney General, Administrator, Governor, Chairperson, or other chief official, as appropriate) of the agency, unless otherwise indicated, including any deputy or assistant chief official of the executive agency.

(b) Commercial component means any component that is a commercial item.

(c) Component means any item supplied to the Government as part of an end item or of another component, except that for use in 52.225-9, and 52.225-11 see the definitions in 52.225-9(a) and 52.225-11(a).

(d) Contracting Officer means a person with the authority to enter into, administer, and/or terminate contracts and make related determinations and findings. The term includes certain authorized representatives of the Contracting Officer acting within the limits of their authority as delegated by the Contracting Officer.

(e) Nondevelopmental item means--

(1) Any previously developed item of supply used exclusively for governmental purposes by a Federal agency, a State or local government, or a foreign government with which the United States has a mutual defense cooperation agreement;

(2) Any item described in paragraph (f)(1) of this definition that requires only minor modification or modifications of a type customarily available in the commercial marketplace in order to meet the requirements of the procuring department or agency; or

(3) Any item of supply being produced that does not meet the requirements of paragraph (f)(1) or (f)(2) solely because the item is not yet in use.

(f) "Contracting Officer" means a person with the authority to enter into, administer, and/or terminate contracts and make related determinations and findings. The term includes certain authorized representatives of the Contracting Officer acting within the limits of their authority as delegated by the Contracting Officer.

(g) Except as otherwise provided in this contract, the term "subcontracts" includes, but is not limited to, purchase orders and changes and modifications to purchase orders under this contract.

(End of clause)

52.203-3 GRATUITIES (APR 1984)

(a) The right of the Contractor to proceed may be terminated by written notice if, after notice and hearing, the agency head or a designee determines that the Contractor, its agent, or another representative--

(1) Offered or gave a gratuity (e.g., an entertainment or gift) to an officer, official, or employee of the Government; and

(2) Intended, by the gratuity, to obtain a contract or favorable treatment under a contract.

(b) The facts supporting this determination may be reviewed by any court having lawful jurisdiction.

(c) If this contract is terminated under paragraph (a) of this clause, the Government is entitled--

(1) To pursue the same remedies as in a breach of the contract; and

(2) In addition to any other damages provided by law, to exemplary damages of not less than 3 nor more than 10 times the cost incurred by the Contractor in giving gratuities to the person concerned, as determined by the agency head or a designee. (This subparagraph (c)(2) is applicable only if this contract uses money appropriated to the Department of Defense.)

(d) The rights and remedies of the Government provided in this clause shall not be exclusive and are in addition to any other rights and remedies provided by law or under this contract.

(End of clause)

52.203-5 COVENANT AGAINST CONTINGENT FEES (APR 1984)

(a) The Contractor warrants that no person or agency has been employed or retained to solicit or obtain this contract upon an agreement or understanding for a contingent fee, except a bona fide employee or agency. For breach or violation of this warranty, the Government shall have the right to annul this contract without liability or, in its discretion, to deduct from the contract price or consideration, or otherwise recover, the full amount of the contingent fee.

(b) "Bona fide agency," as used in this clause, means an established commercial or selling agency, maintained by a contractor for the purpose of securing business, that neither exerts nor proposes to exert improper influence to solicit or obtain Government contracts nor holds itself out as being able to obtain any Government contract or contracts

through improper influence.

"Bona fide employee," as used in this clause, means a person, employed by a contractor and subject to the contractor's supervision and control as to time, place, and manner of performance, who neither exerts nor proposes to exert improper influence to solicit or obtain Government contracts nor holds out as being able to obtain any Government contract or contracts through improper influence.

"Contingent fee," as used in this clause, means any commission, percentage, brokerage, or other fee that is contingent upon the success that a person or concern has in securing a Government contract.

"Improper influence," as used in this clause, means any influence that induces or tends to induce a Government employee or officer to give consideration or to act regarding a Government contract on any basis other than the merits of the matter.

(End of clause)

52.203-7 ANTI-KICKBACK PROCEDURES. (JUL 1995)

(a) Definitions.

"Kickback," as used in this clause, means any money, fee, commission, credit, gift, gratuity, thing of value, or compensation of any kind which is provided, directly or indirectly, to any prime Contractor, prime Contractor employee, subcontractor, or subcontractor employee for the purpose of improperly obtaining or rewarding favorable treatment in connection with a prime contract or in connection with a subcontract relating to a prime contract.

"Person," as used in this clause, means a corporation, partnership, business association of any kind, trust, joint-stock company, or individual.

"Prime contract," as used in this clause, means a contract or contractual action entered into by the United States for the purpose of obtaining supplies, materials, equipment, or services of any kind.

"Prime Contractor," as used in this clause, means a person who has entered into a prime contract with the United States.

"Prime Contractor employee," as used in this clause, means any officer, partner, employee, or agent of a prime Contractor.

"Subcontract," as used in this clause, means a contract or contractual action entered into by a prime Contractor or subcontractor for the purpose of obtaining supplies, materials, equipment, or services of any kind under a prime contract.

"Subcontractor," as used in this clause, (1) means any person, other than the prime Contractor, who offers to furnish or furnishes any supplies, materials, equipment, or services of any kind under a prime contract or a subcontract entered into in connection with such prime contract, and (2) includes any person who offers to furnish or furnishes general supplies to the prime Contractor or a higher tier subcontractor.

"Subcontractor employee," as used in this clause, means any officer, partner, employee, or agent of a subcontractor.

(b) The Anti-Kickback Act of 1986 (41 U.S.C. 51-58) (the Act), prohibits any person from -

(1) Providing or attempting to provide or offering to provide any kickback;

(2) Soliciting, accepting, or attempting to accept any kickback; or

(3) Including, directly or indirectly, the amount of any kickback in the contract price charged by a prime Contractor to the United States or in the contract price charged by a subcontractor to a prime Contractor or higher tier subcontractor.

(c)(1) The Contractor shall have in place and follow reasonable procedures designed to prevent and detect possible violations described in paragraph (b) of this clause in its own operations and direct business relationships.

(2) When the Contractor has reasonable grounds to believe that a violation described in paragraph (b) of this clause may have occurred, the Contractor shall promptly report in writing the possible violation. Such reports shall be made to the inspector general of the contracting agency, the head of the contracting agency if the agency does not have an inspector general, or the Department of Justice.

(3) The Contractor shall cooperate fully with any Federal agency investigating a possible violation described in paragraph (b) of this clause.

(4) The Contracting Officer may (i) offset the amount of the kickback against any monies owed by the United States under the prime contract and/or (ii) direct that the Prime Contractor withhold, from sums owed a subcontractor under the prime contract, the amount of any kickback. The Contracting Officer may order the monies withheld under subdivision (c)(4)(ii) of this clause be paid over to the Government unless the Government has already offset those monies under subdivision (c)(4)(i) of this clause. In either case, the Prime Contractor shall notify the Contracting Officer when the monies are withheld.

(5) The Contractor agrees to incorporate the substance of this clause, including this subparagraph (c)(5) but excepting subparagraph (c)(1), in all subcontracts under this contract which exceed $100,000.

52.203-8 CANCELLATION, RESCISSION, AND RECOVERY OF FUNDS FOR ILLEGAL OR IMPROPER ACTIVITY (JAN 1997)

(a) If the Government receives information that a contractor or a person has engaged in conduct constituting a violation of subsection (a), (b), (c), or (d) of Section 27 of the Office of Federal Procurement Policy Act (41 U.S.C. 423) (the Act), as amended by section 4304 of the 1996 National Defense Authorization Act for Fiscal Year 1996 (Pub. L. 104-106), the Government may--

(1) Cancel the solicitation, if the contract has not yet been awarded or issued; or

(2) Rescind the contract with respect to which--

(i) The Contractor or someone acting for the Contractor has been convicted for an offense where the conduct constitutes a violation of subsection 27(a) or (b) of the Act for the purpose of either--

(A) Exchanging the information covered by such subsections for anything of value; or

(B) Obtaining or giving anyone a competitive advantage in the award of a Federal agency procurement contract; or

(ii) The head of the contracting activity has determined, based upon a preponderance of the evidence, that the Contractor or someone acting for the Contractor has engaged in conduct constituting an offense punishable under subsections 27(e)(1) of the Act.

(b) If the Government rescinds the contract under paragraph (a) of this clause, the Government is entitled to recover, in addition to any penalty prescribed by law, the amount expended under the contract.

(c) The rights and remedies of the Government specified herein are not exclusive, and are in addition to any other rights and remedies provided by law, regulation, or under this contract.

(End of clause)

52.203-10 PRICE OR FEE ADJUSTMENT FOR ILLEGAL OR IMPROPER ACTIVITY (JAN 1997)

(a) The Government, at its election, may reduce the price of a fixed-price type contract and the total cost and fee under a cost-type contract by the amount of profit or fee determined as set forth in paragraph (b) of this clause if the head of the contracting activity or designee determines that there was a violation of subsection 27 (a), (b), or (c) of the Office of Federal Procurement Policy Act, as amended (41 U.S.C. 423), as implemented in section 3.104 of the Federal Acquisition Regulation.

(b) The price or fee reduction referred to in paragraph (a) of this clause shall be--

(1) For cost-plus-fixed-fee contracts, the amount of the fee specified in the contract at the time of award;

(2) For cost-plus-incentive-fee contracts, the target fee specified in the contract at the time of award, notwithstanding any minimum fee or "fee floor" specified in the contract;

(3) For cost-plus-award-fee contracts--

(i) The base fee established in the contract at the time of contract award;

(ii) If no base fee is specified in the contract, 30 percent of the amount of each award fee otherwise payable to the Contractor for each award fee evaluation period or at each award fee determination point.

(4) For fixed-price-incentive contracts, the Government may--

(i) Reduce the contract target price and contract target profit both by an amount equal to the initial target profit specified in the contract at the time of contract award; or

(ii) If an immediate adjustment to the contract target price and contract target profit would have a significant adverse impact on the incentive price revision relationship under the contract, or adversely affect the contract financing provisions, the Contracting Officer may defer such adjustment until establishment of the total final price of the contract. The total final price established in accordance with the incentive price revision provisions of the contract shall be reduced by an amount equal to the initial target profit specified in the contract at the time of contract award and such reduced price shall be the total final contract price.

(5) For firm-fixed-price contracts, by 10 percent of the initial contract price or a profit amount determined by the Contracting Officer from records or documents in existence prior to the date of the contract award.

(c) The Government may, at its election, reduce a prime contractor's price or fee in

accordance with the procedures of paragraph (b) of this clause for violations of the Act by its subcontractors by an amount not to exceed the amount of profit or fee reflected in the subcontract at the time the subcontract was first definitively priced.

(d) In addition to the remedies in paragraphs (a) and (c) of this clause, the Government may terminate this contract for default. The rights and remedies of the Government specified herein are not exclusive, and are in addition to any other rights and remedies provided by law or under this contract.

(End of clause)

52.203-12 LIMITATION ON PAYMENTS TO INFLUENCE CERTAIN FEDERAL TRANSACTIONS (JUN 1997)

(a) Definitions.

"Agency," as used in this clause, means executive agency as defined in 2.101.

"Covered Federal action," as used in this clause, means any of the following Federal actions:

(1) The awarding of any Federal contract.

(2) The making of any Federal grant.

(3) The making of any Federal loan.

(4) The entering into of any cooperative agreement.

(5) The extension, continuation, renewal, amendment, or modification of any Federal contract, grant, loan, or cooperative agreement.

"Indian tribe" and "tribal organization," as used in this clause, have the meaning provided in section 4 of the Indian Self-Determination and Education Assistance Act (25 U.S.C. 450B) and include Alaskan Natives.

"Influencing or attempting to influence," as used in this clause, means making, with the intent to influence, any communication to or appearance before an officer or employee of any agency, a Member of Congress, an officer or employee of Congress, or an employee of a Member of Congress in connection with any covered Federal action.

"Local government," as used in this clause, means a unit of government in a State and, if chartered, established, or otherwise recognized by a State for the performance of a governmental duty, including a local public authority, a special district, an intrastate

district, a council of governments, a sponsor group representative organization, and any other instrumentality of a local government.

"Officer or employee of an agency," as used in this clause, includes the following individuals who are employed by an agency:

(1) An individual who is appointed to a position in the Government under Title 5, United States Code, including a position under a temporary appointment.

(2) A member of the uniformed services, as defined in subsection 101(3),Title 37, United States Code.

(3) A special Government employee, as defined in section 202, Title 18, United States Code.

(4) An individual who is a member of a Federal advisory committee, as defined by the Federal Advisory Committee Act, Title 5, United States Code, appendix 2.

"Person," as used in this clause, means an individual, corporation, company, association, authority, firm, partnership, society, State, and local government, regardless of whether such entity is operated for profit, or not for profit. This term excludes an Indian tribe, tribal organization, or any other Indian organization with respect to expenditures specifically permitted by other Federal law.

"Reasonable compensation," as used in this clause, means, with respect to a regularly employed officer or employee of any person, compensation that is consistent with the normal compensation for such officer or employee for work that is not furnished to, not funded by, or not furnished in cooperation with the Federal Government.

"Reasonable payment," as used in this clause, means, with respect to professional and other technical services, a payment in an amount that is consistent with the amount normally paid for such services in the private sector.

"Recipient," as used in this clause, includes the Contractor and all subcontractors. This term excludes an Indian tribe, tribal organization, or any other Indian organization with respect to expenditures specifically permitted by other Federal law.

"Regularly employed," as used in this clause, means, with respect to an officer or employee of a person requesting or receiving a Federal contract, an officer or employee who is employed by such person for at least 130 working days within 1 year immediately preceding the date of the submission that initiates agency consideration of such person for receipt of such contract. An officer or employee who is employed by such person for less than 130 working days within 1 year immediately preceding the date of the submission that initiates agency consideration of such person shall be considered to be regularly employed as soon as he or she is employed by such person for 130 working days.

"State," as used in this clause, means a State of the United States, the District of Columbia, the Commonwealth of Puerto Rico, a territory or possession of the United States, an agency or instrumentality of a State, and multi-State, regional, or interstate entity having governmental duties and powers.

(b) Prohibitions.

(1) Section 1352 of Title 31, United States Code, among other things, prohibits a recipient of a Federal contract, grant, loan, or cooperative agreement from using appropriated funds to pay any person for influencing or attempting to influence an officer or employee of any agency, a Member of Congress, an officer or employee of Congress, or an employee of a Member of Congress in connection with any of the following covered Federal actions: the awarding of any Federal contract; the making of any Federal grant; the making of any Federal loan; the entering into of any cooperative agreement; or the modification of any Federal contract, grant, loan, or cooperative agreement.

(2) The Act also requires Contractors to furnish a disclosure if any funds other than Federal appropriated funds (including profit or fee received under a covered Federal transaction) have been paid, or will be paid, to any person for influencing or attempting to influence an officer or employee of any agency, a Member of Congress, an officer or employee of Congress, or an employee of a Member of Congress in connection with a Federal contract, grant, loan, or cooperative agreement.

(3) The prohibitions of the Act do not apply under the following conditions:

(i) Agency and legislative liaison by own employees.

(A) The prohibition on the use of appropriated funds, in subparagraph (b)(1) of this clause, does not apply in the case of a payment of reasonable compensation made to an officer or employee of a person requesting or receiving a covered Federal action if the payment is for agency and legislative liaison activities not directly related to a covered Federal action.

(B) For purposes of subdivision (b)(3)(i)(A) of this clause, providing any information specifically requested by an agency or Congress is permitted at any time.

(C) The following agency and legislative liaison activities are permitted at any time where they are not related to a specific solicitation for any covered Federal action:

(1) Discussing with an agency the qualities and characteristics (including individual demonstrations) of the person's products or services, conditions or terms of sale, and service capabilities.

(2) Technical discussions and other activities regarding the application or adaptation of the person's products or services for an agency's use.

(D) The following agency and legislative liaison activities are permitted where they are prior to formal solicitation of any covered Federal action--

(1) Providing any information not specifically requested but necessary for an agency to make an informed decision about initiation of a covered Federal action;

(2) Technical discussions regarding the preparation of an unsolicited proposal prior to its official submission; and

(3) Capability presentations by persons seeking awards from an agency pursuant to the provisions of the Small Business Act, as amended by Pub. L. 95-507, and subsequent amendments.

(E) Only those services expressly authorized by subdivision (b)(3)(i)(A) of this clause are permitted under this clause.

(ii) Professional and technical services.

(A) The prohibition on the use of appropriated funds, in subparagraph (b)(1) of this clause, does not apply in the case of--

(1) A payment of reasonable compensation made to an officer or employee of a person requesting or receiving a covered Federal action or an extension, continuation, renewal, amendment, or modification of a covered Federal action, if payment is for professional or technical services rendered directly in the preparation, submission, or negotiation of any bid, proposal, or application for that Federal action or for meeting requirements imposed by or pursuant to law as a condition for receiving that Federal action.

(2) Any reasonable payment to a person, other than an officer or employee of a person requesting or receiving a covered Federal action or an extension, continuation, renewal, amendment, or modification of a covered Federal action if the payment is for professional or technical services rendered directly in the preparation, submission, or negotiation of any bid, proposal, or application for that Federal action or for meeting requirements imposed by or pursuant to law as a condition for receiving that Federal action. Persons other than officers or employees of a person requesting or receiving a covered Federal action include consultants and trade associations.

(B) For purposes of subdivision (b)(3)(ii)(A) of this clause, "professional and technical services" shall be limited to advice and analysis directly applying any professional or technical discipline. For example, drafting of a legal document accompanying a bid or proposal by a lawyer is allowable. Similarly, technical advice provided by an engineer on the performance or operational capability of a piece of equipment rendered directly in the negotiation of a contract is allowable. However, communications with the intent to influence made by a professional (such as a licensed lawyer) or a technical person (such as a licensed accountant) are not allowable under this section unless they provide advice

and analysis directly applying their professional or technical expertise and unless the advice or analysis is rendered directly and solely in the preparation, submission or negotiation of a covered Federal action. Thus, for example, communications with the intent to influence made by a lawyer that do not provide legal advice or analysis directly and solely related to the legal aspects of his or her client's proposal, but generally advocate one proposal over another are not allowable under this section because the lawyer is not providing professional legal services. Similarly, communications with the intent to influence made by an engineer providing an engineering analysis prior to the preparation or submission of a bid or proposal are not allowable under this section since the engineer is providing technical services but not directly in the preparation, submission or negotiation of a covered Federal action.

(C) Requirements imposed by or pursuant to law as a condition for receiving a covered Federal award include those required by law or regulation and any other requirements in the actual award documents.

(D) Only those services expressly authorized by subdivisions (b)(3)(ii)(A)(1) and (2) of this clause are permitted under this clause.

(E) The reporting requirements of FAR 3.803(a) shall not apply with respect to payments of reasonable compensation made to regularly employed officers or employees of a person.

(c) Disclosure.

(1) The Contractor who requests or receives from an agency a Federal contract shall file with that agency a disclosure form, OMB standard form LLL, Disclosure of Lobbying Activities, if such person has made or has agreed to make any payment using nonappropriated funds (to include profits from any covered Federal action), which would be prohibited under subparagraph (b)(1) of this clause, if paid for with appropriated funds.

(2) The Contractor shall file a disclosure form at the end of each calendar quarter in which there occurs any event that materially affects the accuracy of the information contained in any disclosure form previously filed by such person under subparagraph (c)(1) of this clause. An event that materially affects the accuracy of the information reported includes--

(i) A cumulative increase of $25,000 or more in the amount paid or expected to be paid for influencing or attempting to influence a covered Federal action; or

(ii) A change in the person(s) or individual(s) influencing or attempting to influence a covered Federal action; or

(iii) A change in the officer(s), employee(s), or Member(s) contacted to influence or attempt to influence a covered Federal action.

(3) The Contractor shall require the submittal of a certification, and if required, a disclosure form by any person who requests or receives any subcontract exceeding $100,000 under the Federal contract.

(4) All subcontractor disclosure forms (but not certifications) shall be forwarded from tier to tier until received by the prime Contractor. The prime Contractor shall submit all disclosures to the Contracting Officer at the end of the calendar quarter in which the disclosure form is submitted by the subcontractor. Each subcontractor certification shall be retained in the subcontract file of the awarding Contractor.

(d) Agreement. The Contractor agrees not to make any payment prohibited by this clause.

(e) Penalties.

(1) Any person who makes an expenditure prohibited under paragraph (a) of this clause or who fails to file or amend the disclosure form to be filed or amended by paragraph (b) of this clause shall be subject to civil penalties as provided for by 31 U.S.C. 1352. An imposition of a civil penalty does not prevent the Government from seeking any other remedy that may be applicable.

(2) Contractors may rely without liability on the representation made by their subcontractors in the certification and disclosure form.

(f) Cost allowability. Nothing in this clause makes allowable or reasonable any costs which would otherwise be unallowable or unreasonable. Conversely, costs made specifically unallowable by the requirements in this clause will not be made allowable under any other provision.

(End of clause)

52.204-4 PRINTED OR COPIED DOUBLE-SIDED ON RECYCLED PAPER (AUG 2000)

(a) Definitions. As used in this clause--

“Postconsumer material” means a material or finished product that has served its intended use and has been discarded for disposal or recovery, having completed its life as a consumer item. Postconsumer material is a part of the broader category of “recovered material.” For paper and paper products, postconsumer material means “postconsumer fiber” defined by the U.S. Environmental Protection Agency (EPA) as--

(1) Paper, paperboard, and fibrous materials from retail stores, office buildings, homes, and so forth, after they have passed through their end-usage as a consumer item,

including: used corrugated boxes; old newspapers; old magazines; mixed waste paper; tabulating cards; and used cordage; or

(2) All paper, paperboard, and fibrous materials that enter and are collected from municipal solid waste; but not

(3) Fiber derived from printers' over-runs, converters' scrap, and over-issue publications.

“Printed or copied double-sided” means printing or reproducing a document so that information is on both sides of a sheet of paper.

“Recovered material,” for paper and paper products, is defined by EPA in its Comprehensive Procurement Guideline as “recovered fiber” and means the following materials:

(1) Postconsumer fiber; and

(2) Manufacturing wastes such as--

(i) Dry paper and paperboard waste generated after completion of the papermaking process (that is, those manufacturing operations up to and including the cutting and trimming of the paper machine reel into smaller rolls or rough sheets) including: envelope cuttings, bindery trimmings, and other paper and paperboard waste resulting from printing, cutting, forming, and other converting operations; bag, box, and carton manufacturing wastes; and butt rolls, mill wrappers, and rejected unused stock; and

(ii) Repulped finished paper and paperboard from obsolete inventories of paper and paperboard manufacturers, merchants, wholesalers, dealers, printers, converters, or others.

(b) In accordance with Section 101 of Executive Order 13101 of September 14, 1998, Greening the Government through Waste Prevention, Recycling, and Federal Acquisition, the Contractor is encouraged to submit paper documents, such as offers, letters, or reports, that are printed or copied double-sided on recycled paper that meet minimum content standards specified in Section 505 of Executive Order 13101, when not using electronic commerce methods to submit information or data to the Government.
(c) If the Contractor cannot purchase high-speed copier paper, offset paper, forms bond, computer printout paper, carbonless paper, file folders, white wove envelopes, writing and office paper, book paper, cotton fiber paper, and cover stock meeting the 30 percent postconsumer material standard for use in submitting paper documents to the Government, it should use paper containing no less than 20 percent postconsumer material. This lesser standard should be used only when paper meeting the 30 percent postconsumer material standard is not obtainable at a reasonable price or does not meet reasonable performance standards.

(End of clause)

52.204-6 DATA UNIVERSAL NUMBERING SYSTEM (DUNS) NUMBER (JUN 99)

(a) The offeror shall enter, in the block with its name and address on the cover page of its offer, the annotation "DUNS" followed by the DUNS number that identifies the offeror's name and address exactly as stated in the offer.

(b) If the offeror does not have a DUNS number, it should contact Dun and Bradstreet directly to obtain one. A DUNS number will be provided immediately by telephone at no charge to the offeror. For information on obtaining a DUNS number, the offeror, if located within the United States, should call Dun and Bradstreet at 1-800-333-0505. The offeror should be prepared to provide the following information:

(1) Company name.

(2) Company address.

(3) Company telephone number.

(4) Line of business.

(5) Chief executive officer/key manager.

(6) Date the company was started.

(7) Number of people employed by the company.

(8) Company affiliation.

(c) Offerors located outside the United States may obtain the location and phone number of the local Dun and Bradstreet Information Services office from the Internet Home Page at http://www.customerservice@dnb.com. If an offeror is unable to locate a local service center, it may send an e-mail to Dun and Bradstreet at globalinfo@mail.dnb.com.

(End of provision)

52.209-6 Protecting the Government's Interest When Subcontracting With Contractors Debarred, Suspended, or Proposed for Debarment (JUL 1995)

(a) The Government suspends or debars Contractors to protect the Government's interests. The Contractor shall not enter into any subcontract in excess of the $25,000 with a Contractor that is debarred, suspended, or proposed for debarment unless there is a compelling reason to do so.

(b) The Contractor shall require each proposed first-tier subcontractor, whose subcontract will exceed $25,000, to disclose to the Contractor, in writing, whether as of the time of award of the subcontract, the subcontractor, or its principles, is or is not debarred, suspended, or proposed for debarment by the Federal Government.

(c) A corporate officer or a designee of the Contractor shall notify the Contracting Officer, in writing, before entering into a subcontract with a party that is debarred, suspended, or proposed for debarment (see FAR 9.404 for information on the List of Parties Excluded from Federal Procurement and Nonprocurement Programs). The notice must include the following:

(1) The name of the subcontractor.

(2) The Contractor's knowledge of the reasons for the subcontractor being on the List of Parties Excluded from Federal Procurement and Nonprocurement Programs.

(3) The compelling reason(s) for doing business with the subcontractor notwithstanding its inclusion on the List of Parties Excluded from Federal Procurement and Nonprocurement Programs.

(4) The systems and procedures the Contractor has established to ensure that it is fully protecting the Government's interests when dealing with such subcontractor in view of the specific basis for the party's debarment, suspension, or proposed debarment.

(End of clause)

52.214-26 Audit and Records--Sealed Bidding. (OCT 1997)

(a) As used in this clause, records includes books, documents, accounting procedures and practices, and other data, regardless of type and regardless of whether such items are in written form, in the form of computer data, or in any other form.

(b) Cost or pricing data. If the Contractor has been required to submit cost or pricing data in connection with the pricing of any modification to this contract, the Contracting

Officer, or an authorized representative of the Contracting Officer, in order to evaluate the accuracy, completeness, and currency of the cost or pricing data, shall have the right to examine and audit all of the Contractor's records, including computations and projections, related to--

(1) The proposal for the modification;

(2) The discussions conducted on the proposal(s), including those related to negotiating;

(3) Pricing of the modification; or

(4) Performance of the modification.

(c) Comptroller General. In the case of pricing any modification, the Comptroller General of the United States, or an authorized representative, shall have the same rights as specified in paragraph (b) of this clause.

(d) Availability. The Contractor shall make available at its office at all reasonable times the materials described in reproduction, until 3 years after final payment under this contract, or for any other period specified in Subpart 4.7 of the Federal Acquisition Regulation (FAR). FAR Subpart 4.7, Contractor Records Retention, in effect on the data of this contract, is incorporated by reference in its entirety and made a part of this contract.

(1) If this contract is completely or partially terminated, the records relating to the work terminated shall be made available for 3 years after any resulting final termination settlement.

(2) Records pertaining to appeals under the Disputes clause or to litigation or the settlement of claims arising under or relating to the performance of this contract shall be made available until disposition of such appeals, litigation, or claims.

(e) The Contractor shall insert a clause containing all the provisions of this clause, including this paragraph (e), in all subcontracts expected to exceed the threshold in FAR 15.403-4(a)(1) for submission of cost or pricing data.

(End of clause)

52.214-27 Price Reduction for Defective Cost or Pricing Data - Modifications - Sealed Bidding. (OCT 1997)

(a) This clause shall become operative only for any modification to this contract involving aggregate increases and/or decreases in costs, plus applicable profits, expected to exceed the threshold for the submission of cost or pricing data at FAR 15.403-4(a)(1), except that this clause does not apply to a modification if an exception under FAR 15.403-1(b) applies.

(1) Based on adequate price competition;

(2) Based on established catalog or market prices of commercial items sold in substantial quantities to the general public; or

(3) Set by law or regulation.

(b) If any price, including profit, negotiated in connection with any modification under this clause, was increased by any significant amount because

(1) the Contractor or a subcontractor furnished cost or pricing data that were not complete, accurate, and current as certified in its Certificate of Current Cost or Pricing Data;

(2) a subcontractor or prospective subcontractor furnished the Contractor cost or pricing data that were not complete, accurate, and current as certified in the Contractor's Certificate of Current Cost or Pricing Data; or

(3) any of these parties furnished data of any description that were not accurate, the price shall be reduced accordingly and the contract shall be modified to reflect the reduction. This right to a price reduction is limited to that resulting from defects in data relating to modifications for which this clause becomes operative under paragraph (a) above.

(c) Any reduction in the contract price under paragraph (b) above due to defective data from a prospective subcontractor that was not subsequently awarded the subcontract shall be limited to the amount, plus applicable overhead and profit markup, by which:

(1) the actual subcontract; or

(2) the actual cost to the Contractor, if there was no subcontract, was less than the prospective subcontract cost estimate submitted by the Contractor; provided, that the actual subcontract price was not itself affected by defective cost or pricing data.

(d) If the Contracting Officer determines under paragraph (b) of this clause that a price or cost reduction should be made:

(1) the Contractor agrees not to raise the following matters as a defense:

(i) The Contractor or subcontractor was a sole source supplier or otherwise was in a superior bargaining position and thus the price of the contract would not have been modified even if accurate, complete, and current cost or pricing data had been submitted;

(ii) The Contracting Officer should have known that the cost or pricing data in issue were defective even though the Contractor or subcontractor took no affirmative action to bring the character of the data to the attention of the Contracting Officer;

(iii) The contract was based on an agreement about the total cost of the contract and there was no agreement about the cost of each item procured under the contract; or

(iv) The Contractor or subcontractor did not submit a Certificate of Current Cost or Pricing Data.

(2) Except as prohibited by subdivision (d)(2)(ii) of this clause:

(i) an offset in an amount determined appropriate by the Contracting Officer based upon the facts shall be allowed against the amount of a contract price reduction if:

(A) The Contractor certifies to the Contracting Officer that, to the best of the Contractor's knowledge and belief, the Contractor is entitled to the offset in the amount requested; and

(B) The Contractor proves that the cost or pricing data were available before the date of agreement on the price of the contract (or price of the modification) and that the data were not submitted before such date.

(ii) An offset shall not be allowed if:

(A) The understated data was known by the Contractor to be understated when the Certificate of Current Cost or Pricing Data was signed; or (B) The Government proves that the facts demonstrate that the contract price would not have increased in the amount to be offset even if the available data had been submitted before the date of agreement on price.

(e) If any reduction in the contract price under this clause reduces the price of items for which payment was made prior to the date of the modification reflecting the price reduction, the Contractor shall be liable to and shall pay the United States at the time such overpayment is repaid:

(1) Simple interest on the amount of such overpayment to be computed from the date(s) of overpayment to the Contractor to the date the Government is repaid by the Contractor at the applicable underpayment rate effective for each quarter prescribed by the Secretary of the Treasury under 26 U.S.C. 6621(a)(2); and

(2) A penalty equal to the amount of the overpayment, if the Contractor or subcontractor knowingly submitted cost or pricing data which were incomplete, inaccurate, or noncurrent.

(End of clause)

52.214-28 Subcontractor Cost or Pricing Data - Modifications - Sealed Bidding. (OCT 1997)

(a) The requirements of paragraphs (b) and (c) of this clause shall:

(1) become operative only for any modification to this contract involving aggregate increases and/or decreases in costs, plus applicable profits, expected to exceed the threshold for submission of cost or pricing data at (FAR) 48 CFR 15.403-4(a)(1); and

(2) be limited to such modifications.

(b) Before awarding any subcontract expected to exceed the threshold for submission of cost or pricing data at FAR 15.403-4(a)(1), on the date of agreement on price or the date of award, whichever is later; or before pricing any subcontract modifications involving aggregate increases and/or decreases in costs, plus applicable profits, expected to exceed the threshold for submission of cost or pricing data at FAR 15.403-4(a)(1), the Contractor shall require the subcontractor to submit cost or pricing data (actually or by specific identification in writing), unless an exception under FAR 15.403-1(b) applies.

(1) Based on adequate price competition;

(2) Based on established catalog or market prices of commercial items sold in substantial quantities to the general public; or

(3) Set by law or regulation.

(c) The Contractor shall require the subcontractor to certify in substantially the form prescribed in subsection 15.406-2 of the Federal Acquisition Regulation that, to the best of its knowledge and belief, the data submitted under paragraph (b) above were accurate, complete, and current as of the date of agreement on the negotiated price of the subcontract or subcontract modification.

(d) The Contractor shall insert the substance of this clause, including this paragraph (d), in each subcontract that, when entered into, exceeds the threshold for submission of cost or pricing data at FAR 15.403-4(a)(1).

(End of clause)

52.219-14 LIMITATIONS ON SUBCONTRACTING (DEC 1996)

(a) This clause does not apply to the unrestricted portion of a partial set-aside.

(b) By submission of an offer and execution of a contract, the Offeror/Contractor agrees

that in performance of the contract in the case of a contract for--

(1) Services (except construction). At least 50 percent of the cost of contract performance incurred for personnel shall be expended for employees of the concern.

(2) Supplies (other than procurement from a nonmanufacturer of such supplies). The concern shall perform work for at least 50 percent of the cost of manufacturing the supplies, not including the cost of materials.

(3) General construction. The concern will perform at least 15 percent of the cost of the contract, not including the cost of materials, with its own employees.

(4) Construction by special trade contractors. The concern will perform at least 25 percent of the cost of the contract, not including the cost of materials, with its own employees.

52.219-18 NOTIFICATION OF COMPETITION LIMITED TO ELIGIBLE 8(A) CONCERNS (JUN 1999)

(a) Offers are solicited only from small business concerns expressly certified by the Small Business Administration (SBA) for participation in the SBA's 8(a) Program and which meet the following criteria at the time of submission of offer--

(1) The Offeror is in conformance with the 8(a) support limitation set forth in its approved business plan; and

(2) The Offeror is in conformance with the Business Activity Targets set forth in its approved business plan or any remedial action directed by the SBA.

(b) By submission of its offer, the Offeror represents that it meets all of the criteria set forth in paragraph (a) of this clause.

(c) Any award resulting from this solicitation will be made to the Small Business Administration, which will subcontract performance to the successful 8(a) offeror selected through the evaluation criteria set forth in this solicitation.

(d)(1) Agreement. A small business concern submitting an offer in its own name agrees to furnish, in performing the contract, only end items manufactured or produced by small business concerns in the United States. The term “United States” includes its territories and possessions, the Commonwealth of Puerto Rico, the Trust Territory of the Pacific Islands, and the District of Columbia. If this procurement is processed under simplified acquisition procedures and the total amount of this contract does not exceed $25,000, a small business concern may furnish the product of any domestic firm. This paragraph does not apply in connection with construction or service contracts.

(2) The will notify the Contracting Officer in writing immediately upon entering an agreement (either oral or written) to transfer all or part of its stock or other ownership interest to any other party.

(End of clause)

52.222-3 Convict Labor (Aug 1996)

The Contractor agrees not to employ in the performance of this contract any person undergoing a sentence of imprisonment which has been imposed by any court of a State, the District of Columbia, the Commonwealth of Puerto Rico, the Virgin Islands, Guam, American Samoa, the Commonwealth of the Northern Mariana Islands, or the Trust Territory of the Pacific Islands. This limitation, however, shall not prohibit the employment by the Contractor in the performance of this contract of persons on parole or probation to work at paid employment during the term of their sentence or persons who have been pardoned or who have served their terms. Nor shall it prohibit the employment by the Contractor in the performance of this contract of persons confined for violation of the laws of any of the States, the District of Columbia, the Commonwealth of Puerto Rico, the Virgin Islands, Guam, American Samoa, the Commonwealth of the Northern Mariana Islands, or the Trust Territory of the Pacific Islands who are authorized to work at paid employment in the community under the laws of such jurisdiction, if--

(a)(1) The worker is paid or is in an approved work training program on a voluntary basis;

(2) Representatives of local union central bodies or similar labor union organizations have been consulted;

(3) Such paid employment will not result in the displacement of employed workers, or be applied in skills, crafts, or trades in which there is a surplus of available gainful labor in the locality, or impair existing contracts for services; and

(4) The rates of pay and other conditions of employment will not be less than those paid or provided for work of a similar nature in the locality in which the work is being performed; and

(b) The Attorney General of the United States has certified that the work-release laws or regulations of the jurisdiction involved are in conformity with the requirements of Executive Order 11755, as amended by Executive Orders 12608 and 12943.

(End of clause)

52.222-4 Contract Work Hours and Safety Standards Act - Overtime Compensation. (SEP 2000)

(a) Overtime requirements. No Contractor or subcontractor employing laborers or mechanics (see Federal Acquisition Regulation 22.300) shall require or permit them to work over 40 hours in any workweek unless they are paid at least 1 and 1/2 times the basic rate of pay for each hour worked over 40 hours.

(b) Violation; liability for unpaid wages; liquidated damages. The responsible Contractor and subcontractor are liable for unpaid wages if they violate the terms in paragraph (a) of this clause. In addition, the Contractor and subcontractor are liable for liquidated damages payable to the Government. The Contracting Officer will assess liquidated damages at the rate of $10 per affected employee for each calendar day on which the employer required or permitted the employee to work in excess of the standard workweek of 40 hours without paying overtime wages required by the Contract Work Hours and Safety Standards Act.

(c) Withholding for unpaid wages and liquidated damages. The Contracting Officer will withhold from payments due under the contract sufficient funds required to satisfy any Contractor or subcontractor liabilities for unpaid wages and liquidated damages. If amounts withheld under the contract are insufficient to satisfy Contractor or subcontractor liabilities, the Contracting Officer will withhold payments from other Federal or Federally assisted contracts held by the same Contractor that are subject to the Contract Work Hours and Safety Standards Act.

(d) Payrolls and basic records.

(1) The Contractor and its subcontractors shall maintain payrolls and basic payroll records for all laborers and mechanics working on the contract during the contract and shall make them available to the Government until 3 years after contract completion. The records shall contain the name and address of each employee, social security number, labor classifications, hourly rates of wages paid, daily and weekly number of hours worked, deductions made, and actual wages paid. The records need not duplicate those required for construction work by Department of Labor regulations at 29 CFR 5.5(a)(3) implementing the Davis-Bacon Act.

(2) The Contractor and its subcontractors shall allow authorized representatives of the Contracting Officer or the Department of Labor to inspect, copy, or transcribe records maintained under paragraph (d)(1) of this clause. The Contractor or subcontractor also shall allow authorized representatives of the Contracting Officer or Department of Labor to interview employees in the workplace during working hours.

(e) Subcontracts. The Contractor shall insert the provisions set forth in paragraphs (a) through (d) of this clause in subcontracts exceeding $100,000 and require subcontractors to include these provisions in any lower tier subcontracts. The Contractor shall be

responsible for compliance by any subcontractor or lower-tier subcontractor with the provisions set forth in paragraphs (a) through (d) of this clause.

(End of clause)

52.222-6 DAVIS-BACON ACT (FEB 1995)

(a) All laborers and mechanics employed or working upon the site of the work will be paid unconditionally and not less often than once a week, and without subsequent deduction or rebate on any account (except such payroll deductions as are permitted by regulations issued by the Secretary of Labor under the Copeland Act (29 CFR Part 3), the full amount of wages and bona fide fringe benefits (or cash equivalents thereof) due at time of payment computed at rates not less than those contained in the wage determination of the Secretary of Labor which is attached hereto and made a part hereof, regardless of any contractual relationship which may be alleged to exist between the Contractor and such laborers and mechanics. Contributions made or costs reasonably anticipated for bona fide fringe benefits under section 1(b)(2) of the Davis-Bacon Act on behalf of laborers or mechanics are considered wages paid to such laborers or mechanics, subject to the provisions of paragraph (d) of this clause; also, regular contributions made or costs incurred for more than a weekly period (but not less often than quarterly) under plans, funds, or programs which cover the particular weekly period, are deemed to be constructively made or incurred during such period. Such laborers and mechanics shall be paid not less than the appropriate wage rate and fringe benefits in the wage determination for the classification of work actually performed, without regard to skill, except as provided in the clause entitled Apprentices and Trainees. Laborers or mechanics performing work in more than one classification may be compensated at the rate specified for each classification for the time actually worked therein; provided, That the employer's payroll records accurately set forth the time spent in each classification in which work is performed. The wage determination (including any additional classifications and wage rates conformed under paragraph (b) of this clause) and the Davis-Bacon poster (WH-1321) shall be posted at all times by the Contractor and its subcontractors at the site of the work in a prominent and accessible place where it can be easily seen by the workers.

(b)(1) The Contracting Officer shall require that any class of laborers or mechanics which is not listed in the wage determination and which is to be employed under the contract shall be classified in conformance with the wage determination. The Contracting Officer shall approve an additional classification and wage rate and fringe benefits therefor only when all the following criteria have been met:

(i) The work to be performed by the classification requested is not performed by a classification in the wage determination.

(ii) The classification is utilized in the area by the construction industry.

(iii) The proposed wage rate, including any bona fide fringe benefits, bears a reasonable relationship to the wage rates contained in the wage determination.

(2) If the Contractor and the laborers and mechanics to be employed in the classification (if known), or their representatives, and the Contracting Officer agree on the classification and wage rate (including the amount designated for fringe benefits, where appropriate), a report of the action taken shall be sent by the Contracting Officer to the Administrator of the Wage and Hour Division, Employment Standards Administration, U.S. Department of Labor, Washington, DC 20210. The Administrator or an authorized representative will approve, modify, or disapprove every additional classification action within 30 days of receipt and so advise the Contracting Officer or will notify the Contracting Officer within the 30-day period that additional time is necessary.

(3) In the event the Contractor, the laborers or mechanics to be employed in the classification, or their representatives, and the Contracting Officer do not agree on the proposed classification and wage rate (including the amount designated for fringe benefits, where appropriate), the Contracting Officer shall refer the questions, including the views of all interested parties and the recommendation of the Contracting Officer, to the Administrator of the Wage and Hour Division for determination. The Administrator, or an authorized representative, will issue a determination within 30 days of receipt and so advise the Contracting Officer or will notify the Contracting Officer within the 30-day period that additional time is necessary.

(4) The wage rate (including fringe benefits, where appropriate) determined pursuant to subparagraphs (b)(2) and (b)(3) of this clause shall be paid to all workers performing work in the classification under this contract from the first day on which work is performed in the classification.

(c) Whenever the minimum wage rate prescribed in the contract for a class of laborers or mechanics includes a fringe benefit which is not expressed as an hourly rate, the Contractor shall either pay the benefit as stated in the wage determination or shall pay another bona fide fringe benefit or an hourly cash equivalent thereof.

(a) If the Contractor does not make payments to a trustee or other third person, the Contractor may consider as part of the wages of any laborer or mechanic the amount of any costs reasonably anticipated in providing bona fide fringe benefits under a plan or program; provided, That the Secretary of Labor has found, upon the written request of the Contractor, that the applicable standards of the Davis-Bacon Act have been met. The Secretary of Labor may require the Contractor to set aside in a separate account assets for the meeting of obligations under the plan or program.

(End of clause)

52.222-7 WITHHOLDING OF FUNDS (FEB 1988)

The Contracting Officer shall, upon his or her own action or upon written request of an authorized representative of the Department of Labor, withhold or cause to be withheld from the Contractor under this contract or any other Federal contract with the same Prime Contractor, or any other Federally assisted contract subject to Davis-Bacon prevailing wage requirements, which is held by the same Prime Contractor, so much of the accrued payments or advances as may be considered necessary to pay laborers and mechanics, including apprentices, trainees, and helpers, employed by the Contractor or any subcontractor the full amount of wages required by the contract. In the event of failure to pay any laborer or mechanic, including any apprentice, trainee, or helper, employed or working on the site of the work, all or part of the wages required by the contract, the Contracting Officer may, after written notice to the Contractor, take such action as may be necessary to cause the suspension of any further payment, advance, or guarantee of funds until such violations have ceased.

(End of clause)

52.222-8 PAYROLLS AND BASIC RECORDS (FEB 1988)

(a) Payrolls and basic records relating thereto shall be maintained by the Contractor during the course of the work and preserved for a period of 3 years thereafter for all laborers and mechanics working at the site of the work. Such records shall contain the name, address, and social security number of each such worker, his or her correct classification, hourly rates of wages paid (including rates of contributions or costs anticipated for bona fide fringe benefits or cash equivalents thereof of the types described in section 1(b)(2)(B) of the Davis-Bacon Act), daily and weekly number of hours worked, deductions made, and actual wages paid. Whenever the Secretary of Labor has found, under paragraph (d) of the clause entitled Davis-Bacon Act, that the wages of any laborer or mechanic include the amount of any costs reasonably anticipated in providing benefits under a plan or program described in section 1(b)(2)(B) of the Davis-Bacon Act, the Contractor shall maintain records which show that the commitment to provide such benefits is enforceable, that the plan or program is financially responsible, and that the plan or program has been communicated in writing to the laborers or mechanics affected, and records which show the costs anticipated or the actual cost incurred in providing such benefits. Contractors employing apprentices or trainees under approved programs shall maintain written evidence of the registration of apprenticeship programs and certification of trainee programs, the registration of the apprentices and trainees, and the ratios and wage rates prescribed in the applicable programs.

(b)(1) The Contractor shall submit weekly for each week in which any contract work is performed a copy of all payrolls to the Contracting Officer. The payrolls submitted shall

set out accurately and completely all of the information required to be maintained under paragraph (a) of this clause. This information may be submitted in any form desired. Optional Form WH-347 (Federal Stock Number 029-005-00014-1) is available for this purpose and may be purchased from the Superintendent of Documents, U.S. Government Printing Office, Washington, DC 20402. The Prime Contractor is responsible for the submission of copies of payrolls by all subcontractors.

(2) Each payroll submitted shall be accompanied by a "Statement of Compliance," signed by the Contractor or subcontractor or his or her agent who pays or supervises the payment of the persons employed under the contract and shall certify--

(i) That the payroll for the payroll period contains the information required to be maintained under paragraph (a) of this clause and that such information is correct and complete;

(ii) That each laborer or mechanic (including each helper, apprentice, and trainee) employed on the contract during the payroll period has been paid the full weekly wages earned, without rebate, either directly or indirectly, and that no deductions have been made either directly or indirectly from the full wages earned, other than permissible deductions as set forth in the Regulations, 29 CFR Part 3; and

(iii) That each laborer or mechanic has been paid not less than the applicable wage rates and fringe benefits or cash equivalents for the classification of work performed, as specified in the applicable wage determination incorporated into the contract.

(3) The weekly submission of a properly executed certification set forth on the reverse side of Optional Form WH-347 shall satisfy the requirement for submission of the "Statement of Compliance" required by subparagraph (b)(2) of this clause.

(4) The falsification of any of the certifications in this clause may subject the Contractor or subcontractor to civil or criminal prosecution under Section 1001 of Title 18 and Section 3729 of Title 31 of the United States Code.

(c) The Contractor or subcontractor shall make the records required under paragraph (a) of this clause available for inspection, copying, or transcription by the Contracting Officer or authorized representatives of the Contracting Officer or the Department of Labor. The Contractor or subcontractor shall permit the Contracting Officer or representatives of the Contracting Officer or the Department of Labor to interview employees during working hours on the job. If the Contractor or subcontractor fails to submit required records or to make them available, the Contracting Officer may, after written notice to the Contractor, take such action as may be necessary to cause the suspension of any further payment. Furthermore, failure to submit the required records upon request or to make such records available may be grounds for debarment action pursuant to 29 CFR 5.12.

(End of clause)

52.222-9 APPRENTICES AND TRAINEES (FEB 1988)

(a) Apprentices. Apprentices will be permitted to work at less than the predetermined rate for the work they performed when they are employed pursuant to and individually registered in a bona fide apprenticeship program registered with the U.S. Department of Labor, Employment and Training Administration, Bureau of Apprenticeship and Training, or with a State Apprenticeship Agency recognized by the Bureau, or if a person is employed in his or her first 90 days of probationary employment as an apprentice in such an apprenticeship program, who is not individually registered in the program, but who has been certified by the Bureau of Apprenticeship and Training or a State Apprenticeship Agency (where appropriate) to be eligible for probationary employment as an apprentice. The allowable ratio of apprentices to journeymen on the job site in any craft classification shall not be greater than the ratio permitted to the Contractor as to the entire work force under the registered program. Any worker listed on a payroll at an apprentice wage rate, who is not registered or otherwise employed as stated in this paragraph, shall be paid not less than the applicable wage determination for the classification of work actually performed. In addition, any apprentice performing work on the job site in excess of the ratio permitted under the registered program shall be paid not less than the applicable wage rate on the wage determination for the work actually performed. Where a contractor is performing construction on a project in a locality other than that in which its program is registered, the ratios and wage rates (expressed in percentages of the journeyman's hourly rate) specified in the Contractor's or subcontractor's registered program shall be observed. Every apprentice must be paid at not less than the rate specified in the registered program for the apprentice's level of progress, expressed as a percentage of the journeyman hourly rate specified in the applicable wage determination. Apprentices shall be paid fringe benefits in accordance with the provisions of the apprenticeship program. If the apprenticeship program does not specify fringe benefits, apprentices must be paid the full amount of fringe benefits listed on the wage determination for the applicable classification. If the Administrator determines that a different practice prevails for the applicable apprentice classification, fringes shall be paid in accordance with that determination. In the event the Bureau of Apprenticeship and Training, or a State Apprenticeship Agency recognized by the Bureau, withdraws approval of an apprenticeship program, the Contractor will no longer be permitted to utilize apprentices at less than the applicable predetermined rate for the work performed until an acceptable program is approved.

(b) Trainees. Except as provided in 29 CFR 5.16, trainees will not be permitted to work at less than the predetermined rate for the work performed unless they are employed pursuant to and individually registered in a program which has received prior approval, evidenced by formal certification by the U.S. Department of Labor, Employment and Training Administration. The ratio of trainees to journeymen on the job site shall not be greater than permitted under the plan approved by the Employment and Training Administration. Every trainee must be paid at not less than the rate specified in the

approved program for the trainee's level of progress, expressed as a percentage of the journeyman hourly rate specified in the applicable wage determination. Trainees shall be paid fringe benefits in accordance with the provisions of the trainee program. If the trainee program does not mention fringe benefits, trainees shall be paid the full amount of fringe benefits listed in the wage determination unless the Administrator of the Wage and Hour Division determines that there is an apprenticeship program associated with the corresponding journeyman wage rate in the wage determination which provides for less than full fringe benefits for apprentices. Any employee listed on the payroll at a trainee rate who is not registered and participating in a training plan approved by the Employment and Training Administration shall be paid not less than the applicable wage rate in the wage determination for the classification of work actually performed. In addition, any trainee performing work on the job site in excess of the ratio permitted under the registered program shall be paid not less than the applicable wage rate in the wage determination for the work actually performed. In the event the Employment and Training Administration withdraws approval of a training program, the Contractor will no longer be permitted to utilize trainees at less than the applicable predetermined rate for the work performed until an acceptable program is approved.

(c) Equal employment opportunity. The utilization of apprentices, trainees, and journeymen under this clause shall be in conformity with the equal employment opportunity requirements of Executive Order 11246, as amended, and 29 CFR Part 30.

(End of clause)

52.222-10 COMPLIANCE WITH COPELAND ACT REQUIREMENTS (FEB 1988)

The Contractor shall comply with the requirements of 29 CFR Part 3, which are hereby incorporated by reference in this contract.

(End of clause)

52.222-11 SUBCONTRACTS (LABOR STANDARDS (FEB 1988)

(a) The Contractor or subcontractor shall insert in any subcontracts the clauses entitled Davis-Bacon Act, Contract Work Hours and Safety Standards Act-Overtime Compensation, Apprentices and Trainees, Payrolls and Basic Records, Compliance with Copeland Act Requirements, Withholding of Funds, Subcontracts (Labor Standards), Contract Termination-Debarment, Disputes Concerning Labor Standards, Compliance with Davis-Bacon and Related Act Regulations, and Certification of Eligibility, and such other clauses as the Contracting Officer may, by appropriate instructions, require, and

also a clause requiring subcontractors to include these clauses in any lower tier subcontracts. The Prime Contractor shall be responsible for compliance by any subcontractor or lower tier subcontractor with all the contract clauses cited in this paragraph.

(b)(1) Within 14 days after award of the contract, the Contractor shall deliver to the Contracting Officer a completed Statement and Acknowledgment Form (SF 1413) for each subcontract, including the subcontractor's signed and dated acknowledgment that the clauses set forth in paragraph (a) of this clause have been included in the subcontract.

(2) Within 14 days after the award of any subsequently awarded subcontract the Contractor shall deliver to the Contracting Officer an updated completed SF 1413 for such additional subcontract.

(End of clause)

52.222-12 CONTRACT TERMINATION--DEBARMENT (FEB 1988)

A breach of the contract clauses entitled Davis-Bacon Act, Contract Work Hours and Safety Standards Act--Overtime Compensation, Apprentices and Trainees, Payrolls and Basic Records, Compliance with Copeland Act Requirements, Subcontracts (Labor Standards), Compliance with Davis-Bacon and Related Act Regulations, or Certification of Eligibility may be grounds for termination of the contract, and for debarment as a Contractor and subcontractor as provided in 29 CFR 5.12.

(End of clause)

52.222-13 COMPLIANCE WITH DAVIS-BACON AND RELATED ACT REGULATIONS (FEB 1988)

All rulings and interpretations of the Davis-Bacon and Related Acts contained in 29 CFR Parts 1, 3, and 5 are hereby incorporated by reference in this contract.

(End of clause)

52.222-14 DISPUTES CONCERNING LABOR STANDARDS (FEB 1988)

The United States Department of Labor has set forth in 29 CFR Parts 5, 6, and 7

procedures for resolving disputes concerning labor standards requirements. Such disputes shall be resolved in accordance with those procedures and not the Disputes clause of this contract. Disputes within the meaning of this clause include disputes between the Contractor (or any of its subcontractors) and the contracting agency, the U.S. Department of Labor, or the employees or their representatives.

(End of clause)

52.222-15 CERTIFICATION OF ELIGIBILITY (FEB 1988)

(a) By entering into this contract, the Contractor certifies that neither it (nor he or she) nor any person or firm who has an interest in the Contractor's firm is a person or firm ineligible to be awarded Government contracts by virtue of section 3(a) of the Davis-Bacon Act or 29 CFR 5.12(a)(1).

(b) No part of this contract shall be subcontracted to any person or firm ineligible for award of a Government contract by virtue of section 3(a) of the Davis-Bacon Act or 29 CFR 5.12(a)(1).

(c) The penalty for making false statements is prescribed in the U.S. Criminal Code, 18 U.S.C. 1001.

(End of clause)

52.222-26 EQUAL OPPORTUNITY (APR 2002)

(a) Definition. United States, as used in this clause, means the 50 States, the District of Columbia, Puerto Rico, the Northern Mariana Islands, American Samoa, Guam, the U.S. Virgin Islands, and Wake Island.

(b) If, during any 12-month period (including the 12 months preceding the award of this contract), the Contractor has been or is awarded nonexempt Federal contracts and/or subcontracts that have an aggregate value in excess of $10,000, the Contractor shall comply with paragraphs (b)(1) through (b)(11) of this clause, except for work performed outside the United States by employees who were not recruited within the United States. Upon request, the Contractor shall provide information necessary to determine the applicability of this clause.

(1) The Contractor shall not discriminate against any employee or applicant for employment because of race, color, religion, sex, or national origin. However, it shall not be a violation of this clause for the Contractor to extend a publicly announced preference

in employment to Indians living on or near an Indian reservation, in connection with employment opportunities on or near an Indian reservation, as permitted by 41 CFR 60-1.5.

(2) The Contractor shall take affirmative action to ensure that applicants are employed, and that employees are treated during employment, without regard to their race, color, religion, sex, or national origin. This shall include, but not be limited to, (i) employment, (ii) upgrading, (iii) demotion, (iv) transfer, (v) recruitment or recruitment advertising, (vi) layoff or termination, (vii) rates of pay or other forms of compensation, and (viii) selection for training, including apprenticeship.

(3) The Contractor shall post in conspicuous places available to employees and applicants for employment the notices to be provided by the Contracting Officer that explain this clause.

(4) The Contractor shall, in all solicitations or advertisements for employees placed by or on behalf of the Contractor, state that all qualified applicants will receive consideration for employment without regard to race, color, religion, sex, or national origin.

(5) The Contractor shall send, to each labor union or representative of workers with which it has a collective bargaining agreement or other contract or understanding, the notice to be provided by the Contracting Officer advising the labor union or workers' representative of the Contractor's commitments under this clause, and post copies of the notice in conspicuous places available to employees and applicants for employment.

(6) The Contractor shall comply with Executive Order 11246, as amended, and the rules, regulations, and orders of the Secretary of Labor.

(7) The Contractor shall furnish to the contracting agency all information required by Executive Order 11246, as amended, and by the rules, regulations, and orders of the Secretary of Labor. The Contractor shall also file Standard Form 100 (EEO-1), or any successor form, as prescribed in 41 CFR part 60-1. Unless the Contractor has filed within the 12 months preceding the date of contract award, the Contractor shall, within 30 days after contract award, apply to either the regional Office of Federal Contract Compliance Programs (OFCCP) or the local office of the Equal Employment Opportunity Commission for the necessary forms.

(8) The Contractor shall permit access to its premises, during normal business hours, by the contracting agency or the OFCCP for the purpose of conducting on-site compliance evaluations and complaint investigations. The Contractor shall permit the Government to inspect and copy any books, accounts, records (including computerized records), and other material that may be relevant to the matter under investigation and pertinent to compliance with Executive Order 11246, as amended, and rules and regulations that implement the Executive Order.

(9) If the OFCCP determines that the Contractor is not in compliance with this clause or

any rule, regulation, or order of the Secretary of Labor, this contract may be canceled, terminated, or suspended in whole or in part and the Contractor may be declared ineligible for further Government contracts, under the procedures authorized in Executive Order 11246, as amended. In addition, sanctions may be imposed and remedies invoked against the Contractor as provided in Executive Order 11246, as amended; in the rules, regulations, and orders of the Secretary of Labor; or as otherwise provided by law.

(10) The Contractor shall include the terms and conditions of subparagraphs (b)(1) through (11) of this clause in every subcontract or purchase order that is not exempted by the rules, regulations, or orders of the Secretary of Labor issued under Executive Order 11246, as amended, so that these terms and conditions will be binding upon each subcontractor or vendor.

(11) The Contractor shall take such action with respect to any subcontract or purchase order as the contracting officer may direct as a means of enforcing these terms and conditions, including sanctions for noncompliance; provided, that if the Contractor becomes involved in, or is threatened with, litigation with a subcontractor or vendor as a result of any direction, the Contractor may request the United States to enter into the litigation to protect the interests of the United States.

(c) Notwithstanding any other clause in this contract, disputes relative to this clause will be governed by the procedures in 41 CFR 60-1.1.

(End of clause)

52.222-27 AFFIRMATIVE ACTION COMPLIANCE REQUIREMENTS FOR CONSTRUCTION (FEB 1999)

(a) Definitions. "Covered area," as used in this clause, means the geographical area described in the solicitation for this contract.

"Deputy Assistant Secretary," as used in this clause, means Deputy Assistant Secretary for Federal Contract Compliance, U.S. Department of Labor, or a designee.

"Employer's identification number," as used in this clause, means the Federal Social Security number used on the employer's quarterly federal tax return, U.S. Treasury Department Form 941.

"Minority," as used in this clause, means--

(1) American Indian or Alaskan Native (all persons having origins in any of the original peoples of North America and maintaining identifiable tribal affiliations through membership and participation or community identification).

(2) Asian and Pacific Islander (all persons having origins in any of the original peoples of the Far East, Southeast Asia, the Indian Subcontinent, or the Pacific Islands);

(3) Black (all persons having origins in any of the black African racial groups not of Hispanic origin); and

(4) Hispanic (all persons of Mexican, Puerto Rican, Cuban, Central or South American, or other Spanish culture or origin, regardless of race).

(b) If the Contractor, or a subcontractor at any tier, subcontracts a portion of the work involving any construction trade, each such subcontract in excess of $10,000 shall include this clause and the Notice containing the goals for minority and female participation stated in the solicitation for this contract.

(c) If the Contractor is participating in a Hometown Plan (41 CFR 60-4) approved by the U.S. Department of Labor in a covered area, either individually or through an association, its affirmative action obligations on all work in the plan area (including goals) shall comply with the plan for those trades that have unions participating in the plan. Contractors must be able to demonstrate participation in, and compliance with, the provisions of the plan. Each Contractor or subcontractor participating in an approved plan is also required to comply with its obligations under the Equal Opportunity clause, and to make a good faith effort to achieve each goal under the plan in each trade in which it has employees. The overall good-faith performance by other Contractors or subcontractors toward a goal in an approved plan does not excuse any Contractor's or subcontractor's failure to make good-faith efforts to achieve the plan's goals.

(d) The Contractor shall implement the affirmative action procedures in subparagraphs (g)(1) through (16) of this clause. The goals stated in the solicitation for this contract are expressed as percentages of the total hours of employment and training of minority and female utilization that the Contractor should reasonably be able to achieve in each construction trade in which it has employees in the covered area. If the Contractor performs construction work in a geographical area located outside of the covered area, it shall apply the goals established for the geographical area where that work is actually performed. The Contractor is expected to make substantially uniform progress toward its goals in each craft.

(e) Neither the terms and conditions of any collective bargaining agreement, nor the failure by a union with which the Contractor has a collective bargaining agreement, to refer minorities or women shall excuse the Contractor's obligations under this clause, Executive Order 11246, as amended, or the regulations thereunder.

(f) In order for the nonworking training hours of apprentices and trainees to be counted in meeting the goals, apprentices and trainees must be employed by the Contractor during the training period, and the Contractor must have made a commitment to employ the apprentices and trainees at the completion of their training, subject to the availability of employment opportunities. Trainees must be trained pursuant to training programs

approved by the U.S. Department of Labor.

(g) The Contractor shall take affirmative action to ensure equal employment opportunity. The evaluation of the Contractor's compliance with this clause shall be based upon its effort to achieve maximum results from its actions. The Contractor shall document these efforts fully and implement affirmative action steps at least as extensive as the following:

(1) Ensure a working environment free of harassment, intimidation, and coercion at all sites and in all facilities where the Contractor's employees are assigned to work. The Contractor, if possible, will assign two or more women to each construction project. The Contractor shall ensure that foremen, superintendents, and other onsite supervisory personnel are aware of and carry out the Contractor's obligation to maintain such a working environment, with specific attention to minority or female individuals working at these sites or facilities.

(2) Establish and maintain a current list of sources for minority and female recruitment. Provide written notification to minority and female recruitment sources and community organizations when the Contractor or its unions have employment opportunities available, and maintain a record of the organizations' responses.

(3) Establish and maintain a current file of the names, addresses, and telephone numbers of each minority and female off-the-street applicant, referrals of minorities or females from unions, recruitment sources, or community organizations, and the action taken with respect to each individual. If an individual was sent to the union hiring hall for referral and not referred back to the Contractor by the union or, if referred back, not employed by the
Contractor, this shall be documented in the file, along with whatever additional actions the Contractor may have taken.

(4) Immediately notify the Deputy Assistant Secretary when the union or unions with which the Contractor has a collective bargaining agreement has not referred back to the Contractor a minority or woman sent by the Contractor, or when the Contractor has other information that the union referral process has impeded the Contractor's efforts to meet its obligations.

(5) Develop on-the-job training opportunities and/or participate in training programs for the area that expressly include minorities and women, including upgrading programs and apprenticeship and trainee programs relevant to the Contractor's employment needs, especially those programs funded or approved by the Department of Labor. The Contractor shall provide notice of these programs to the sources compiled under subparagraph (g)(2) of this clause.

(6) Disseminate the Contractor's equal employment policy by--

(i) Providing notice of the policy to unions and to training, recruitment, and outreach programs, and requesting their cooperation in assisting the Contractor in meeting its

contract obligations;

(ii) Including the policy in any policy manual and in collective bargaining agreements;

(iii) Publicizing the policy in the company newspaper, annual report, etc.;

(iv) Reviewing the policy with all management personnel and with all minority and female employees at least once a year; and

(v) Posting the policy on bulletin boards accessible to employees at each location where construction work is performed.

(7) Review, at least annually, the Contractor's equal employment policy and affirmative action obligations with all employees having responsibility for hiring, assignment, layoff, termination, or other employment decisions. Conduct review of this policy with all on-site supervisory personnel before initiating construction work at a job site. A written record shall be made and maintained identifying the time and place of these meetings, persons attending, subject matter discussed, and disposition of the subject matter.

(8) Disseminate the Contractor's equal employment policy externally by including it in any advertising in the news media, specifically including minority and female news media. Provide written notification to, and discuss this policy with, other Contractors and subcontractors with which the Contractor does or anticipates doing business.

(9) Direct recruitment efforts, both oral and written, to minority, female, and community organizations, to schools with minority and female students, and to minority and female recruitment and training organizations serving the Contractor's recruitment area and employment needs. Not later than 1 month before the date for acceptance of applications for apprenticeship or training by any recruitment source, send written notification to organizations such as the above, describing the openings, screening procedures, and tests to be used in the selection process.

(10) Encourage present minority and female employees to recruit minority persons and women. Where reasonable, provide after-school, summer, and vacation employment to minority and female youth both on the site and in other areas of the Contractor's workforce.

(11) Validate all tests and other selection requirements where required under 41 CFR 60-3.

(12) Conduct, at least annually, an inventory and evaluation at least of all minority and female personnel for promotional opportunities. Encourage these employees to seek or to prepare for, through appropriate training, etc., opportunities for promotion.

(13) Ensure that seniority practices, job classifications, work assignments, and other personnel practices do not have a discriminatory effect by continually monitoring all

personnel and employment-related activities to ensure that the Contractor's obligations under this contract are being carried out.

(14) Ensure that all facilities and company activities are nonsegregated except that separate or single-user rest rooms and necessary dressing or sleeping areas shall be provided to assure privacy between the sexes.

(15) Maintain a record of solicitations for subcontracts for minority and female construction contractors and suppliers, including circulation of solicitations to minority and female contractor associations and other business associations.

(16) Conduct a review, at least annually, of all supervisors' adherence to and performance under the Contractor's equal employment policy and affirmative action obligations.

(h) The Contractor is encouraged to participate in voluntary associations that may assist in fulfilling one or more of the affirmative action obligations contained in subparagraphs (g)(1) through (16) of this clause. The efforts of a contractor association, joint contractor-union, contractor-community, or similar group of which the contractor is a member and participant may be asserted as fulfilling one or more of its obligations under subparagraphs (g)(1) through (16) of this clause, provided the Contractor--

(1) Actively participates in the group;

(2) Makes every effort to ensure that the group has a positive impact on the employment of minorities and women in the industry;

(3) Ensures that concrete benefits of the program are reflected in the Contractor's minority and female workforce participation;

(4) Makes a good-faith effort to meet its individual goals and timetables; and

(5) Can provide access to documentation that demonstrates the effectiveness of actions taken on behalf of the Contractor. The obligation to comply is the Contractor's, and failure of such a group to fulfill an obligation shall not be a defense for the Contractor's noncompliance.

(i) A single goal for minorities and a separate single goal for women shall be established. The Contractor is required to provide equal employment opportunity and to take affirmative action for all minority groups, both male and female, and all women, both minority and nonminority. Consequently, the Contractor may be in violation of Executive Order 11246, as amended, if a particular group is employed in a substantially disparate manner.

(j) The Contractor shall not use goals or affirmative action standards to discriminate against any person because of race, color, religion, sex, or national origin.

(k) The Contractor shall not enter into any subcontract with any person or firm debarred from Government contracts under Executive Order 11246, as amended.

(l) The Contractor shall carry out such sanctions and penalties for violation of this clause and of the Equal Opportunity clause, including suspension, termination, and cancellation of existing subcontracts, as may be imposed or ordered under Executive Order 11246, as amended, and its implementing regulations, by the OFCCP. Any failure to carry out these sanctions and penalties as ordered shall be a violation of this clause and Executive Order 11246, as amended.

(m) The Contractor in fulfilling its obligations under this clause shall implement affirmative action procedures at least as extensive as those prescribed in paragraph (g) of this clause, so as to achieve maximum results from its efforts to ensure equal employment opportunity. If the Contractor fails to comply with the requirements of Executive Order 11246, as amended, the implementing regulations, or this clause, the Deputy Assistant Secretary shall take action as prescribed in 41 CFR 60-4.8.

(n) The Contractor shall designate a responsible official to--

(1) Monitor all employment-related activity to ensure that the Contractor's equal employment policy is being carried out;

(2) Submit reports as may be required by the Government; and

(3) Keep records that shall at least include for each employee the name, address, telephone number, construction trade, union affiliation (if any), employee identification number, social security number, race, sex, status (e.g., mechanic, apprentice, trainee, helper, or laborer), dates of changes in status, hours worked per week in the indicated trade, rate of pay, and locations at which the work was performed. Records shall be maintained in an easily understandable and retrievable form; however, to the degree that existing records satisfy this requirement, separate records are not required to be maintained.

Nothing contained herein shall be construed as a limitation upon the application of other laws that establish different standards of compliance or upon the requirements for the hiring of local or other area residents (e.g., those under the Public Works Employment Act of 1977 and the Community Development Block Grant Program).

(End of clause)

52.222-36 AFFIRMATIVE ACTION FOR WORKERS WITH DISABILITIES (JUN 1998)

(a) General. (1) Regarding any position for which the employee or applicant for employment is qualified, the Contractor shall not discriminate against any employee or applicant because of physical or mental disability. The Contractor agrees to take affirmative action to employ, advance in employment, and otherwise treat qualified individuals with disabilities without discrimination based upon their physical or mental disability in all employment practices such as--

(i) Recruitment, advertising, and job application procedures;

(ii) Hiring, upgrading, promotion, award of tenure, demotion, transfer, layoff, termination, right of return from layoff, and rehiring;

(iii) Rates of pay or any other form of compensation and changes in compensation;

(iv) Job assignments, job classifications, organizational structures, position descriptions, lines of progression, and seniority lists;

(v) Leaves of absence, sick leave, or any other leave;

(vi) Fringe benefits available by virtue of employment, whether or not administered by the Contractor;

(vii) Selection and financial support for training, including apprenticeships, professional meetings, conferences, and other related activities, and selection for leaves of absence to pursue training;

(viii) Activities sponsored by the Contractor, including social or recreational programs; and

(ix) Any other term, condition, or privilege of employment.

(2) The Contractor agrees to comply with the rules, regulations, and relevant orders of the Secretary of Labor (Secretary) issued under the Rehabilitation Act of 1973 (29 U.S.C. 793) (the Act), as amended.

(b) Postings. (1) The Contractor agrees to post employment notices stating--

(i) The Contractor's obligation under the law to take affirmative action to employ and advance in employment qualified individuals with disabilities; and

(ii) The rights of applicants and employees.

(2) These notices shall be posted in conspicuous places that are available to employees and applicants for employment. The Contractor shall ensure that applicants and employees with disabilities are informed of the contents of the notice (e.g., the Contractor may have the notice read to a visually disabled individual, or may lower the posted notice so that it might be read by a person in a wheelchair). The notices shall be in a form prescribed by the Deputy Assistant Secretary for Federal Contract Compliance of the U.S. Department of Labor (Deputy Assistant Secretary) and shall be provided by or through the Contracting Officer.

(3) The Contractor shall notify each labor union or representative of workers with which it has a collective bargaining agreement or other contract understanding, that the Contractor is bound by the terms of Section 503 of the Act and is committed to take affirmative action to employ, and advance in employment, qualified individuals with physical or mental disabilities.

(c) Noncompliance. If the Contractor does not comply with the requirements of this clause, appropriate actions may be taken under the rules, regulations, and relevant orders of the Secretary issued pursuant to the Act.

(d) Subcontracts. The Contractor shall include the terms of this clause in every subcontract or purchase order in excess of $10,000 unless exempted by rules, regulations, or orders of the Secretary. The Contractor shall act as specified by the Deputy Assistant Secretary to enforce the terms, including action for noncompliance.

(End of clause)

52.222-37 EMPLOYMENT REPORTS ON DISABLED VETERANS AND VETERANS OF THE VIETNAM ERA (JAN 1999)

(a) Unless the Contractor is a State or local government agency, the Contractor shall report at least annually, as required by the Secretary of Labor, on--

(1) The number of disabled veterans and the number of veterans of the Vietnam era in the workforce of the contractor by job category and hiring location; and

(2) The total number of new employees hired during the period covered by the report, and of that total, the number of disabled veterans, and the number of veterans of the Vietnam era.

(b) The above items shall be reported by completing the form entitled "Federal Contractor Veterans' Employment Report VETS-100."

(c) Reports shall be submitted no later than September 30 of each year beginning September 30, 1988.

(d) The employment activity report required by paragraph (a)(2) of this clause shall reflect total hires during the most recent 12-month period as of the ending date selected for the employment profile report required by paragraph (a)(1) of this clause. Contractors may select an ending date: (1) As of the end of any pay period during the period January through March 1st of the year the report is due, or (2) as of December 31, if the contractor has previous written approval from the Equal Employment Opportunity Commission to do so for purposes of submitting the Employer Information Report EEO-1 (Standard Form 100).

(e) The count of veterans reported according to paragraph (a) of this clause shall be based on voluntary disclosure. Each Contractor subject to the reporting requirements at 38 U.S.C. 4212 shall invite all disabled veterans and veterans of the Vietnam era who wish to benefit under the affirmative action program at 38 U.S.C. 4212 to identify themselves to the Contractor. The invitation shall state that the information is voluntarily provided; that the information will be kept confidential; that disclosure or refusal to provide the information will not subject the applicant or employee to any adverse treatment; and that the information will be used only in accordance with the regulations promulgated under 38 U.S.C. 4212.

(f) Subcontracts. The Contractor shall include the terms of this clause in every subcontract or purchase order of $10,000 or more unless exempted by rules, regulations, or orders of the Secretary.

(End of clause)

52.223-5 POLLUTION PREVENTION AND RIGHT-TO-KNOW INFORMATION (APR 1998)

(a) Executive Order 12856 of August 3, 1993, requires Federal facilities to comply with the provisions of the Emergency Planning and Community Right-to-Know Act of 1986 (EPCRA)(42 U.S.C. 11001-11050) and the Pollution Prevention Act of 1990 (PPA)(42 U.S.C. 13101-13109).

(b) The Contractor shall provide all information needed by the Federal facility to comply with the emergency planning reporting requirements of Section 302 of EPCRA; the emergency notice requirements of Section 304 of EPCRA; the list of Material Safety Data Sheets required by Section 311 of EPCRA; the emergency and hazardous chemical inventory forms of Section 312 of EPCRA; the toxic chemical release inventory of Section 313 of EPCRA, which includes the reduction and recycling information required by Section 6607 of PPA; and the toxic chemical reduction goals requirements of Section 3-302 of Executive Order 12856.

(End of clause)

52.223-6 DRUG-FREE WORKPLACE (MAY 2001)

(a) Definitions. As used in this clause --

"Controlled substance" means a controlled substance in schedules I through V of section 202 of the Controlled Substances Act (21 U.S.C. 812) and as further defined in regulation at 21 CFR 1308.11 - 1308.15.

"Conviction" means a finding of guilt (including a plea of nolo contendere) or imposition of sentence, or both, by any judicial body charged with the responsibility to deter- mine violations of the Federal or State criminal drug statutes.

"Criminal drug statute" means a Federal or non-Federal criminal statute involving the manufacture, distribution, dispensing, possession, or use of any controlled substance.

"Drug-free workplace" means the site(s) for the performance of work done by the Contractor in connection with a specific contract at which employees of the Contractor are prohibited from engaging in the unlawful manufacture, distribution, dispensing, possession, or use of a controlled substance.

"Employee" means an employee of a Contractor directly engaged in the performance of work under a Government contract. "Directly engaged" is defined to include all direct cost employees and any other Contractor employee who has other than a minimal impact or involvement in contract performance.

"Individual" means an offeror/contractor that has no more than one employee including the offeror/contractor.

(b) The Contractor, if other than an individual, shall-- within 30 days after award (unless a longer period is agreed to in writing for contracts of 30 days or more performance duration), or as soon as possible for contracts of less than 30 days performance duration--

(1) Publish a statement notifying its employees that the unlawful manufacture, distribution, dispensing, possession, or use of a controlled substance is prohibited in the Contractor's workplace and specifying the actions that will be taken against employees for violations of such prohibition;

(2) Establish an ongoing drug-free awareness program to inform such employees about--

(i) The dangers of drug abuse in the workplace;

(ii) The Contractor's policy of maintaining a drug-free workplace;

(iii) Any available drug counseling, rehabilitation, and employee assistance programs; and

(iv) The penalties that may be imposed upon employees for drug abuse violations occurring in the workplace;

(3) Provide all employees engaged in performance of the contract with a copy of the statement required by subparagraph (b)(1) of this clause;

(4) Notify such employees in writing in the statement required by subparagraph (b)(1) of this clause that, as a condition of continued employment on this contract, the employee will--

(i) Abide by the terms of the statement; and

(ii) Notify the employer in writing of the employee's conviction under a criminal drug statute for a violation occurring in the workplace no later than 5 days after such conviction.

(5) Notify the Contracting Officer in writing within 10 days after receiving notice under subdivision (b)(4)(ii) of this clause, from an employee or otherwise receiving actual notice of such conviction. The notice shall include the position title of the employee;

(6) Within 30 days after receiving notice under subdivision (b)(4)(ii) of this clause of a conviction, take one of the following actions with respect to any employee who is convicted of a drug abuse violation occurring in the workplace:

(i) Taking appropriate personnel action against such employee, up to and including termination; or

(ii) Require such employee to satisfactorily participate in a drug abuse assistance or rehabilitation program approved for such purposes by a Federal, State, or local health, law enforcement, or other appropriate agency; and

(7) Make a good faith effort to maintain a drug-free workplace through implementation of subparagraphs (b)(1) though (b)(6) of this clause.

(c) The Contractor, if an individual, agrees by award of the contract or acceptance of a purchase order, not to engage in the unlawful manufacture, distribution, dispensing, possession, or use of a controlled substance while performing this contract.
(d) In addition to other remedies available to the Government, the Contractor's failure to comply with the requirements of paragraph (b) or (c) of this clause may, pursuant to FAR 23.506, render the Contractor subject to suspension of contract payments, termination of the contract for default, and suspension or debarment.

(End of clause)

52.223-14 TOXIC CHEMICAL RELEASE REPORTING (OCT 2000)

(a) Unless otherwise exempt, the Contractor, as owner or operator of a facility used in the performance of this contract, shall file by July 1 for the prior calendar year an annual Toxic Chemical Release Inventory Form (Form R) as described in sections 313(a) and (g) of the Emergency Planning and Community Right-to-Know Act of 1986 (EPCRA) (42 U.S.C. 11023(a) and (g)), and section 6607 of the Pollution Prevention Act of 1990 (PPA) (42 U.S.C. 13106). The Contractor shall file, for each facility subject to the Form R filing and reporting requirements, the annual Form R throughout the life of the contract.

(b) A Contractor owned or operated facility used in the performance of this contract is exempt from the requirement to file an annual Form R if--

(1) The facility does not manufacture, process, or otherwise use any toxic chemicals listed under section 313(c) of EPCRA, 42 U.S.C. 11023(c);

(2) The facility does not have 10 or more full-time employees as specified in section 313(b)(1)(A) of EPCRA, 42 U.S.C. 11023(b)(1)(A);

(3) The facility does not meet the reporting thresholds of toxic chemicals established under of EPCRA, 42 U.S.C. 11023(f) (including the alternate thresholds at 40 CFR 372.27, provided an appropriate certification form has been filed with EPA);

(4) The facility does not fall within Standard Industrial Classification Code (SIC) major groups 20 through 39 or their corresponding North American Industry Classification System (NAICS) sectors 31 through 33; or

(5) The facility is not located within any State of the United States, the District of Columbia, the Commonwealth of Puerto Rico, Guam, American Samoa, the United States Virgin Islands, the Northern Mariana Islands, or any other territory or possession over which the United States has jurisdiction.

(c) If the Contractor has certified to an exemption in accordance with one or more of the criteria in paragraph (b) of this clause, and after award of the contract circumstances change so that any of its owned or operated facilities used in the performance of this contract is no longer exempt--

(1) The Contractor shall notify the Contracting Officer; and

(2) The Contractor, as owner or operator of a facility used in the performance of this contract that is no longer exempt, shall (i) submit a Toxic Chemical Release Inventory Form (Form R) on or before July 1 for the prior calendar year during which the facility

becomes eligible; and (ii) continue to file the annual Form R for the life of the contract for such facility.

(d) The Contracting Officer may terminate this contract or take other action as appropriate, if the Contractor fails to comply accurately and fully with the EPCRA and PPA toxic chemical release filing and reporting requirements.

(e) Except for acquisitions of commercial items, as defined in FAR Part 2, the Contractor shall--

(1) For competitive subcontracts expected to exceed $100,000 (including all options), include a solicitation provision substantially the same as the provision at FAR 52.223-13, Certification of Toxic Chemical Release Reporting; and

(2) Include in any resultant subcontract exceeding $100,000 (including all options), the substance of this clause, except this paragraph (e).

(End of clause)

52.225-9 BUY AMERICAN ACT—CONSTRUCTION MATERIALS (MAY 2002)

(a) Definitions. As used in this clause--

Component means an article, material, or supply incorporated directly into a construction material.

Construction material means an article, material, or supply brought to the construction site by the Contractor or a subcontractor for incorporation into the building or work. The term also includes an item brought to the site preassembled from articles, materials, or supplies. However, emergency life safety systems, such as emergency lighting, fire alarm, and audio evacuation systems, that are discrete systems incorporated into a public building or work and that are produced as complete systems, are evaluated as a single and distinct construction material regardless of when or how the individual parts or components of those systems are delivered to the construction site. Materials purchased directly by the Government are supplies, not construction material.

Cost of components means--

(1) For components purchased by the Contractor, the acquisition cost, including transportation costs to the place of incorporation into the end product (whether or not such costs are paid to a domestic firm), and any applicable duty (whether or not a duty-free entry certificate is issued); or

(2) For components manufactured by the Contractor, all costs associated with the manufacture of the component, including transportation costs as described in paragraph (1) of this definition, plus allocable overhead costs, but excluding profit. Cost of components does not include any costs associated with the manufacture of the end product.

Domestic construction material means--

(1) An unmanufactured construction material mined or produced in the United States; or

(2) A construction material manufactured in the United States, if the cost of its components mined, produced, or manufactured in the United States exceeds 50 percent of the cost of all its components. Components of foreign origin of the same class or kind for which nonavailability determinations have been made are treated as domestic.

Foreign construction material means a construction material other than a domestic construction material.

United States means the 50 States and the District of Columbia, U.S. territories and possessions, Puerto Rico, the Northern Mariana Islands, and any other place subject to U.S. jurisdiction, but does not include leased bases.

(b) Domestic preference. (1) This clause implements the Buy American Act (41 U.S.C. 10a-10d) by providing a preference for domestic construction material. The Contractor shall use only domestic construction material in performing this contract, except as provided in paragraphs (b)(2) and (b)(3) of this clause.

(2) This requirement does not apply to the construction material or components listed by the Government as follows:

(3) The Contracting Officer may add other foreign construction material to the list in paragraph (b)(2) of this clause if the Government determines that

(i) The cost of domestic construction material would be unreasonable. The cost of a particular domestic construction material subject to the requirements of the Buy American Act is unreasonable when the cost of such material exceeds the cost of foreign material by more than 6 percent;

(ii) The application of the restriction of the Buy American Act to a particular construction material would be impracticable or inconsistent with the public interest; or

(iii) The construction material is not mined, produced, or manufactured in the United States in sufficient and reasonably available commercial quantities of a satisfactory quality.

(c) Request for determination of inapplicability of the Buy American Act. (1)(i) Any Contractor request to use foreign construction material in accordance with paragraph (b)(3) of this clause shall include adequate information for Government evaluation of the request, including--

(A) A description of the foreign and domestic construction materials;

(B) Unit of measure;

(C) Quantity;

(D) Price;

(E) Time of delivery or availability;

(F) Location of the construction project;

(G) Name and address of the proposed supplier; and

(H) A detailed justification of the reason for use of foreign construction materials cited in accordance with paragraph (b)(3) of this clause.

(ii) A request based on unreasonable cost shall include a reasonable survey of the market and a completed price comparison table in the format in paragraph (d) of this clause.

(iii) The price of construction material shall include all delivery costs to the construction site and any applicable duty (whether or not a duty-free certificate may be issued).

(iv) Any Contractor request for a determination submitted after contract award shall explain why the Contractor could not reasonably foresee the need for such determination and could not have requested the determination before contract award. If the Contractor does not submit a satisfactory explanation, the Contracting Officer need not make a determination.

(2) If the Government determines after contract award that an exception to the Buy American Act applies and the Contracting Officer and the Contractor negotiate adequate consideration, the Contracting Officer will modify the contract to allow use of the foreign construction material. However, when the basis for the exception is the unreasonable price of a domestic construction material, adequate consideration is not less than the differential established in paragraph (b)(3)(i) of this clause.

(3) Unless the Government determines that an exception to the Buy American Act applies, use of foreign construction material is noncompliant with the Buy American Act.

(d) Data. To permit evaluation of requests under paragraph (c) of this clause based on unreasonable cost, the Contractor shall include the following information and any applicable supporting data based on the survey of suppliers:

Foreign and Domestic Construction Materials Price Comparison

Construction material description	Unit of measure	Quantity	Price (dollars) \1\
Item 1			
Foreign construction material....	.....	.....	.....
Domestic construction material...	.....	.....	.....
Item 2			
Foreign construction material....	.....	.....	.....
Domestic construction material...	.....	.....	.....

Include all delivery costs to the construction site and any applicable duty (whether or not a duty-free entry certificate is issued).

List name, address, telephone number, and contact for suppliers surveyed. Attach copy of response; if oral, attach summary.

Include other applicable supporting information.

(End of clause)

52.225-11 BUY AMERICAN ACT--CONSTRUCTION MATERIALS UNDER TRADE AGREEMENTS (JUL 2002)

(a) Definitions. As used in this clause--

Component means an article, material, or supply incorporated directly into a construction material.

Construction material means an article, material, or supply brought to the construction site by the Contractor or subcontractor for incorporation into the building or work. The term also includes an item brought to the site preassembled from articles, materials, or supplies. However, emergency life safety systems, such as emergency lighting, fire alarm, and audio evacuation systems, that are discrete systems incorporated into a public building or work and that are produced as complete systems, are evaluated as a single and distinct construction material regardless of when or how the individual parts or

components of those systems are delivered to the construction site. Materials purchased directly by the Government are supplies, not construction material.

Cost of components means--

(1) For components purchased by the Contractor, the acquisition cost, including transportation costs to the place of incorporation into the construction material (whether or not such costs are paid to a domestic firm), and any applicable duty (whether or not a duty-free entry certificate is issued); or

(2) For components manufactured by the Contractor, all costs associated with the manufacture of the component, including transportation costs as described in paragraph (1) of this definition, plus allocable overhead costs, but excluding profit. Cost of components does not include any costs associated with the manufacture of the end product.

Designated country means any of the following countries: Aruba, Austria, Bangladesh, Belgium, Benin, Bhutan, Botswana, Burkina Faso, Burundi, Canada, Cape Verde, Central African Republic, Chad, Comoros, Denmark.

Djibouti, Equatorial Guinea, Finland, France, Gambia, Germany, Greece, Guinea, Guinea-Bissau, Haiti, Hong Kong, Ireland, Israel, Italy, Japan.

Kiribati, Korea, Republic of, Lesotho, Liechtenstein, Luxembourg, Malawi, Maldives, Mali, Mozambique, Nepal, Netherlands, Niger, Norway, Portugal, Rwanda.

Sao Tome and Principe, Sierra Leone, Singapore, Somalia, Spain, Sweden, Switzerland, Tanzania U.R., Togo, Tuvalu, Uganda, United Kingdom, Vanuatu, Western Samoa, Yemen.

Designated country construction material means a construction material that--

(1) Is wholly the growth, product, or manufacture of a designated country; or

(2) In the case of a construction material that consists in whole or in part of materials from another country, has been substantially transformed in a designated country into a new and different construction material distinct from the materials from which it was transformed.

Domestic construction material means--

(1) An unmanufactured construction material mined or produced in the United States; or

(2) A construction material manufactured in the United States, if the cost of its components mined, produced, or manufactured in the United States exceeds 50 percent of

the cost of all its components. Components of foreign origin of the same class or kind for which nonavailability determinations have been made are treated as domestic.

Foreign construction material means a construction material other than a domestic construction material.

North American Free Trade Agreement country means Canada or Mexico.

North American Free Trade Agreement country construction material means a construction material that--

(1) Is wholly the growth, product, or manufacture of a North American Free Trade Agreement (NAFTA) country; or

(2) In the case of a construction material that consists in whole or in part of materials from another country, has been substantially transformed in a NAFTA country into a new and different construction material distinct from the materials from which it was transformed.

United States means the 50 States and the District of Columbia, U.S. territories and possessions, Puerto Rico, the Northern Mariana Islands, and any other place subject to U.S. jurisdiction, but does not include leased bases.

(b) Construction materials. (1) This clause implements the Buy American Act (41 U.S.C. 10a-10d) and the Balance of Payments Program by providing a preference for domestic construction material. In addition, the Contracting Officer has determined that the Trade Agreements Act and the North American Free Trade Agreement (NAFTA) apply to this acquisition. Therefore, the Buy American Act restrictions are waived for designated country and NAFTA country construction materials.

(2) The Contractor shall use only domestic, designated country, or NAFTA country construction material in performing this contract, except as provided in paragraphs (b)(3) and (b)(4) of this clause.

(3) The requirement in paragraph (b)(2) of this clause does not apply to the construction materials or components listed by the Government as follows: None

(4) The Contracting Officer may add other foreign construction material to the list in paragraph (b)(3) of this clause if the Government determines that--

(i) The cost of domestic construction material would be unreasonable. The cost of a particular domestic construction material subject to the restrictions of the Buy American Act is unreasonable when the cost of such material exceeds the cost of foreign material by more than 6 percent;

(ii) The application of the restriction of the Buy American Act to a particular construction material would be impracticable or inconsistent with the public interest; or

(iii) The construction material is not mined, produced, or manufactured in the United States in sufficient and reasonably available commercial quantities of a satisfactory quality.

(c) Request for determination of inapplicability of the Buy American Act.

(1)(i) Any Contractor request to use foreign construction material in accordance with paragraph (b)(4) of this clause shall include adequate information for Government evaluation of the request, including--

(A) A description of the foreign and domestic construction materials;

(B) Unit of measure;

(C) Quantity;

(D) Price;

(E) Time of delivery or availability;

(F) Location of the construction project;

(G) Name and address of the proposed supplier; and

(H) A detailed justification of the reason for use of foreign construction materials cited in accordance with paragraph (b)(3) of this clause.

(ii) A request based on unreasonable cost shall include a reasonable survey of the market and a completed price comparison table in the format in paragraph (d) of this clause.

(iii) The price of construction material shall include all delivery costs to the construction site and any applicable duty (whether or not a duty-free certificate may be issued).

(iv) Any Contractor request for a determination submitted after contract award shall explain why the Contractor could not reasonably foresee the need for such determination and could not have requested the determination before contract award. If the Contractor does not submit a satisfactory explanation, the Contracting Officer need not make a determination.

(2) If the Government determines after contract award that an exception to the Buy American Act applies and the Contracting Officer and the Contractor negotiate adequate consideration, the Contracting Officer will modify the contract to allow use of the foreign construction material. However, when the basis for the exception is the unreasonable

price of a domestic construction material, adequate consideration is not less than the differential established in paragraph (b)(4)(i) of this clause.

(3) Unless the Government determines that an exception to the Buy American Act applies, use of foreign construction material is noncompliant with the Buy American Act.

(d) Data. To permit evaluation of requests under paragraph (c) of this clause based on unreasonable cost, the Contractor shall include the following information and any applicable supporting data based on the survey of suppliers:

Foreign and Domestic Construction Materials Price Comparison

Construction material description	Unit of measure	Quantity	Price (dollars) \1\
Item 1:			
Foreign construction material....	.....	.....	.....
Domestic construction material...	.....	.....	.....
Item 2:			
Foreign construction material....	.....	.....	.....
Domestic construction material...	.....	.....	.....

\1\ Include all delivery costs to the construction site and any applicable duty (whether or not a duty-free entry certificate is issued).

List name, address, telephone number, and contact for suppliers surveyed. Attach copy of response; if oral, attach summary.

Include other applicable supporting information.

(End of clause)

52.227-1 AUTHORIZATION AND CONSENT (JUL 1995)

(a) The Government authorizes and consents to all use and manufacture, in performing this contract or any subcontract at any tier, of any invention described in and covered by a United States patent (1) embodied in the structure or composition of any article the delivery of which is accepted by the Government under this contract or (2) used in machinery, tools, or methods whose use necessarily results from compliance by the Contractor or a subcontractor with (i) specifications or written provisions forming a part of this contract or (ii) specific written instructions given by the Contracting Officer directing the manner of performance. The entire liability to the Government for

infringement of a patent of the United States shall be determined solely by the provisions of the indemnity clause, if any, included in this contract or any subcontract hereunder (including any lower-tier subcontract), and the Government assumes liability for all other infringement to the extent of the authorization and consent hereinabove granted.

(b) The Contractor agrees to include, and require inclusion of, this clause, suitably modified to identify the parties, in all subcontracts at any tier for supplies or services (including construction, architect-engineer services, and materials, supplies, models, samples, and design or testing services expected to exceed the simplified acquisition threshold (however, omission of this clause from any subcontract, including those at or below the simplified acquisition threshold, does not affect this authorization and consent.)

(End of clause)

52.227-2 NOTICE AND ASSISTANCE REGARDING PATENT AND COPYRIGHT INFRINGEMENT (AUG 1996)

(a) The Contractor shall report to the Contracting Officer, promptly and in reasonable written detail, each notice or claim of patent or copyright infringement based on the performance of this contract of which the Contractor has knowledge.

(b) In the event of any claim or suit against the Government on account of any alleged patent or copyright infringement arising out of the performance of this contract or out of the use of any supplies furnished or work or services performed under this contract, the Contractor shall furnish to the Government, when requested by the Contracting Officer, all evidence and information in possession of the Contractor pertaining to such suit or claim. Such evidence and information shall be furnished at the expense of the Government except where the Contractor has agreed to indemnify the Government.

(b) The Contractor agrees to include, and require inclusion of, this clause in all subcontracts at any tier for supplies or services (including construction and architect-engineer subcontracts and those for material, supplies, models, samples, or design or testing services) expected to exceed the simplified acquisition threshold at (FAR) 2.101.to exceed the dollar amount set forth in 13.000 of the Federal Acquisition Regulation (FAR).

(End of clause)

52.227-4 PATENT INDEMNITY--CONSTRUCTION CONTRACTS (APR 1984)

Except as otherwise provided, the Contractor agrees to indemnify the Government and its

officers, agents, and employees against liability, including costs and expenses, for infringement upon any United States patent (except a patent issued upon an application that is now or may hereafter be withheld from issue pursuant to a Secrecy Order under 35 U.S.C. 181) arising out of performing this contract or out of the use or disposal by or for the account of the Government of supplies furnished or work performed under this contract.

(End of clause)

52.227-11 PATENT RIGHTS--RETENTION BY THE CONTRACTOR (SHORT FORM) (JUN 1997)

(a) Definitions.

(1) "Invention" means any invention or discovery which is or may be patentable or otherwise protectable under title 35 of the United States Code, or any novel variety of plant which is or may be protected under the Plant Variety Protection Act (7 U.S.C. 2321, et seq.).

(2) "Made" when used in relation to any invention means the conception or first actual reduction to practice of such invention.

(3) "Nonprofit organization" means a university or other institution of higher education or an organization of the type described in section 501(c)(3) of the Internal Revenue Code of 1954 (26 U.S.C. 501(c)) and exempt from taxation under section 501(a) of the Internal Revenue Code (26 U.S.C. 501(a)) or any nonprofit scientific or educational organization qualified under a state nonprofit organization statute.

(4) "Practical application" means to manufacture, in the case of a composition of product; to practice, in the case of a process or method, or to operate, in the case of a machine or system; and, in each case, under such conditions as to establish that the invention is being utilized and that is benefits are, to the extent permitted by law or Government regulations, available to the public on reasonable terms.

(5) "Small business firm" means a small business concern as defined at section 2 of Pub. L. 85-536 (15 U.S.C. 632) and implementing regulations of the Administrator of the Small Business Administration. For the purpose of this clause, the size standards for small business concerns involved in Government procurement and subcontracting at 13 CFR 121.3-8 and 13 CFR 121.3-12, respectively, will be used.

(6) "Subject invention" means any invention of the contractor conceived or first actually reduced to practice in the performance of work under this contract, provided that in the case of a variety of plant, the date of determination (as defined in section 41(d) of the Plant Variety Protection Act, 7 U.S.C. 2401(d)) must also occur during the period of

contract performance.

(b) Allocation of principal rights. The Contractor may retain the entire right, title, and interest throughout the world to each subject invention subject to the provisions of this clause and 35 U.S.C. 203. With respect to any subject invention in which the Contractor retains title, the Federal Government shall have a nonexclusive, nontransferable, irrevocable, paid-up license to practice or have practiced for or on behalf of the United States the subject invention throughout the world.

(c) Invention disclosure, election of title, and filing of patent application by Contractor. (1) The Contractor will disclose each subject invention to the Federal agency within 2 months after the inventor discloses it in writing to Contractor personnel responsible for patent matters. The disclosure to the agency shall be in the form of a written report and shall identify the contract under which the invention was made and the inventor(s). It shall be sufficiently complete in technical detail to convey a clear understanding to the extent known at the time of the disclosure, of the nature, purpose, operation, and the physical, chemical, biological or electrical characteristics of the invention. The disclosure shall also identify any publication, on sale or public use of the invention and whether a manuscript describing the invention has been submitted for publication and, if so, whether it has been accepted for publication at the time of disclosure. In addition, after disclosure to the agency, the Contractor will promptly notify the agency of the acceptance of any manuscript describing the invention for publication or of any on sale or public use planned by the Contractor.

(2) The Contractor will elect in writing whether or not to retain title to any such invention by notifying the Federal agency within 2 years of disclosure to the Federal agency. However, in any case where publication, on sale or public use has initiated the 1-year statutory period wherein valid patent protection can still be obtained in the United States, the period for election of title may be shortened by the agency to a date that is no more than 60 days prior to the end of the statutory period.

(3) The Contractor will file its initial patent application on a subject invention to which it elects to retain title within 1 year after election of title or, if earlier, prior to the end of any statutory period wherein valid patent protection can be obtained in the United States after a publication, on sale, or public use. The Contractor will file patent applications in additional countries or international patent offices within either 10 months of the corresponding initial patent application or 6 months from the date permission is granted by the Commissioner of Patents and Trademarks to file foreign patent applications where such filing has been prohibited by a Secrecy Order.

(4) Requests for extension of the time for disclosure election, and filing under subparagraphs (c)(1), (2), and (3) of this clause may, at the discretion of the agency, be granted.

(d) Conditions when the Government may obtain title. The Contractor will convey to the Federal agency, upon written request, title to any subject invention--

(1) If the Contractor fails to disclose or elect title to the subject invention within the times specified in paragraph (c) of this clause, or elects not to retain title; provided, that the agency may only request title within 60 days after learning of the failure of the Contractor to disclose or elect within the specified times.

(2) In those countries in which the Contractor fails to file patent applications within the times specified in paragraph (c) of this clause; provided, however, that if the Contractor has filed a patent application in a country after the times specified in paragraph (c) of this clause, but prior to its receipt of the written request of the Federal agency, the Contractor shall continue to retain title in that country.

(3) In any country in which the Contractor decides not to continue the prosecution of any application for, to pay the maintenance fees on, or defend in reexamination or opposition proceeding on, a patent on a subject invention.

(e) Minimum rights to Contractor and protection of the Contractor right to file. (1) The Contractor will retain a nonexclusive royalty-free license throughout the world in each subject invention to which the Government obtains title, except if the Contractor fails to disclose the invention within the times specified in paragraph (c) of this clause. The Contractor's license extends to its domestic subsidiary and affiliates, if any, within the corporate structure of which the Contractor is a party and includes the right to grant sublicenses of the same scope to the extent the Contractor was legally obligated to do so at the time the contract was awarded. The license is transferable only with the approval of the Federal agency, except when transferred to the successor of that part of the Contractor's business to which the invention pertains.

(2) The Contractor's domestic license may be revoked or modified by the funding Federal agency to the extent necessary to achieve expeditious practical application of subject invention pursuant to an application for an exclusive license submitted in accordance with applicable provisions at 37 CFR Part 404 and agency licensing regulations (if any). This license will not be revoked in that field of use or the geographical areas in which the Contractor has achieved practical application and continues to make the benefits of the invention reasonably accessible to the public. The license in any foreign country may be revoked or modified at the discretion of the funding Federal agency to the extent the Contractor, its licensees, or the domestic subsidiaries or affiliates have failed to achieve practical application in that foreign country.

(3) Before revocation or modification of the license, the funding Federal agency will furnish the Contractor a written notice of its intention to revoke or modify the license, and the Contractor will be allowed 30 days (or such other time as may be authorized by the funding Federal agency for good cause shown by the Contractor) after the notice to show cause why the license should not be revoked or modified. The Contractor has the right to appeal, in accordance with applicable regulations in 37 CFR Part 404 and agency regulations, if any, concerning the licensing of
Government-owned inventions, any decision concerning the revocation or modification

of the license.

(f) Contractor action to protect the Government's interest. (1) The Contractor agrees to execute or to have executed and promptly deliver to the Federal agency all instruments necessary to (i) establish or confirm the rights the Government has throughout the world in those subject inventions to which the Contractor elects to retain title, and (ii) convey title to the Federal agency when requested under paragraph (d) of this clause and to enable the Government to obtain patent protection throughout the world in that subject invention.

(2) The Contractor agrees to require, by written agreement, its employees, other than clerical and nontechnical employees, to disclose promptly in writing to personnel identified as responsible for the administration of patent matters and in a format suggested by the Contractor each subject invention made under contract in order that the Contractor can comply with the disclosure provisions of paragraph (c) of this clause, and to execute all papers necessary to file patent applications on subject inventions and to establish the Government's rights in the subject inventions. This disclosure format should require, as a minimum, the information required by subparagraph (c)(1) of this clause. The Contractor shall instruct such employees, through employee agreements or other suitable educational programs, on the importance of reporting inventions in sufficient time to permit the filing of patent applications prior to U.S. or foreign statutory bars.

(3) The Contractor will notify the Federal agency of any decisions not to continue the prosecution of a patent application, pay maintenance fees, or defend in a reexamination or opposition proceeding on a patent, in any country, not less than 30 days before the expiration of the response period required by the relevant patent office.

(4) The Contractor agrees to include, within the specification of any United States patent application and any patent issuing thereon covering a subject invention, the following statement, "This invention was made with Government support under (identify the contract) awarded by (identify the Federal agency). The Government has certain rights in the invention."

(g) Subcontracts. (1) The Contractor will include this clause, suitably modified to identify the parties, in al subcontracts, regardless of tier, for experimental, developmental, or research work to be performed by a small business firm or domestic nonprofit organization. The subcontractor will retain all rights provided for the Contractor in this clause, and the Contractor will not, as part of the consideration for awarding the subcontract, obtain rights in the subcontractor's subject inventions.

(2) The Contractor will include in all other subcontracts, regardless of tier, for experimental, developmental, or research work the patent rights clause required by Subpart 27.3.

(3) In the case of subcontracts, at any tier, the agency, subcontractor, and the Contractor agree that the mutual obligations of the parties created by this clause constitute a contract

between the subcontractor and the Federal agency with respect to the matters covered by the clause; provided, however, that nothing in this paragraph is intended to confer any jurisdiction under the Contract Disputes Act in connection with proceedings under paragraph (j) of this clause.

(h) Reporting on utilization of subject inventions. The Contractor agrees to submit, on request, periodic reports no more frequently than annually on the utilization of a subject invention or on efforts at obtaining such utilization that are being made by the Contractor or its licensees or assignees. Such reports shall include information regarding the status of development, date of first commercial sale or use, gross royalties received by the Contractor, and such other data and information as the agency may reasonably specify. The Contractor also agrees to provide additional reports as may be requested by the agency in connection with any march-in proceeding undertaken by the agency in accordance with paragraph (j) of this clause. As required by 35 U.S.C. 202(c)(5), the agency agrees it will not disclose such information to persons outside the Government without permission of the Contractor.

(i) Preference for United States industry. Notwithstanding any other provision of this clause, the Contractor agrees that neither it nor any assignee will grant to any person the exclusive right to use or sell any subject invention in the United States unless such person agrees that any product embodying the subject invention or produced through the use of the subject invention will be manufactured substantially in the United States. However, in individual cases, the requirement for such an agreement may be waived by the Federal agency upon a showing by the Contractor or its assignee that reasonable but unsuccessful efforts have been made to grant licenses on similar terms to potential licensees that would be likely to manufacture substantially in the United States or that under the circumstances domestic manufacture is not commercially feasible.

(j) March-in rights. The Contractor agrees that, with respect to any subject invention in which it has acquired title, the Federal agency has the right in accordance with the procedures in 37 CFR 401.6 and any supplemental regulations of the agency to require the Contractor, an assignee or exclusive licensee of a subject invention to grant a nonexclusive, partially exclusive, or exclusive license in any field of use to a responsible applicant or applicants, upon terms that are reasonable under the circumstances, and if the Contractor, assignee, or exclusive licensee refuses such a request the Federal agency has the right to grant such a license itself if the Federal agency determines that--

(1) Such action is necessary because the Contractor or assignee has not taken, or is not expected to take within a reasonable time, effective steps to achieve practical application of the subject invention in such field of use;

(2) Such action is necessary to alleviate health or safety needs which are not reasonably satisfied by the Contractor, assignee, or their licensees;

(3) Such action is necessary to meet requirements for public use specified by Federal regulations and such requirements are not reasonably satisfied by the Contractor,

assignee, or licensees; or

(4) Such action is necessary because the agreement required by paragraph (i) of this clause has not been obtained or waived or because a licensee of the exclusive right to use or sell any subject invention in the United States is in breach of such agreement.

(k) Special provisions for contracts with nonprofit organizations. If the Contractor is a nonprofit organization, it agrees that--

(1) Rights to a subject invention in the United States may not be assigned without the approval of the Federal agency, except where such assignment is made to an organization which has as one of its primary functions the management of inventions; provided, that such assignee will be subject to the same provisions as the Contractor;

(2) The Contractor will share royalties collected on a subject invention with the inventor, including Federal employee co-inventors (when the agency deems it appropriate) when the subject invention is assigned in accordance with 35 U.S.C. 202(e) and 37 CFR 401.10;

(3) The balance of any royalties or income earned by the Contractor with respect to subject inventions, after payment of expenses (including payments to inventors) incidental to the administration of subject inventions will be utilized for the support of scientific research or education; and

(4) It will make efforts that are reasonable under the circumstances to attract licensees of subject inventions that are small business firms, and that it will give a preference to a small business firm when licensing a subject invention if the Contractor determines that the small business firm has a plan or proposal for marketing the invention which, if executed, is equally as likely to bring the invention to practical application as any plans or proposals from applicants that are not small business firms; provided, that the Contractor is also satisfied that the small business firm has the capability and resources to carry out its plan or proposal. The decision whether to give a preference in any specific case will be at the discretion of the contractor. However, the Contractor agrees that the Secretary of Commerce may review the Contractor's licensing program and decisions regarding small business applicants, and the Contractor will negotiate changes to its licensing policies, procedures, or practices with the Secretary of Commerce when the Secretary's review discloses that the Contractor could take reasonable steps to more effectively implement the requirements of this subparagraph (k)(4).

(l) Communications.

(Complete according to agency instructions.)

(End of clause)

52.228-2 ADDITIONAL BOND SECURITY (OCT 1997)

The Contractor shall promptly furnish additional security required to protect the Government and persons supplying labor or materials under this contract if--

(a) Any surety upon any bond, or issuing financial institution for other security, furnished with this contract becomes unacceptable to the Government.

(b) Any surety fails to furnish reports on its financial condition as required by the Government;

(c) The contract price is increased so that the penal sum of any bond becomes inadequate in the opinion of the Contracting Officer; or

(d) An irrevocable letter of credit (ILC) used as security will expire before the end of the period of required security. If the Contractor does not furnish an acceptable extension or replacement ILC, or other acceptable substitute, at least 30 days before an ILC's scheduled expiration, the Contracting officer has the right to immediately draw on the ILC.

(End of clause)

52.228-5 INSURANCE--WORK ON A GOVERNMENT INSTALLATION (JAN 1997)

(a) The Contractor shall, at its own expense, provide and maintain during the entire performance of this contract, at least the kinds and minimum amounts of insurance required in the Schedule or elsewhere in the contract.

(b) Before commencing work under this contract, the Contractor shall notify the Contracting Officer in writing that the required insurance has been obtained. The policies evidencing required insurance shall contain an endorsement to the effect that any cancellation or any material change adversely affecting the Government's interest shall not be effective (1) for such period as the laws of the State in which this contract is to be performed prescribe, or (2) until 30 days after the insurer or the Contractor gives written notice to the Contracting Officer, whichever period is longer.

(c) The Contractor shall insert the substance of this clause, including this paragraph (c), in subcontracts under this contract that require work on a Government installation and shall require subcontractors to provide and maintain the insurance required in the Schedule or elsewhere in the contract. The Contractor shall maintain a copy of all subcontractors' proofs of required insurance, and shall make copies available to the Contracting Officer upon request.

(End of clause)

52.228-11 PLEDGES OF ASSETS (FEB 1992)

(a) Offerors shall obtain from each person acting as an individual surety on a bid guarantee, a performance bond, or a payment bond--

(1) Pledge of assets; and

(2) Standard Form 28, Affidavit of Individual Surety.

(b) Pledges of assets from each person acting as an individual surety shall be in the form of--

(1) Evidence of an escrow account containing cash, certificates of deposit, commercial or Government securities, or other assets described in FAR 28.203-2 (except see 28.203-2(b)(2) with respect to Government securities held in book entry form) and/or;

(2) A recorded lien on real estate. The offeror will be required to provide--

(i) Evidence of title in the form of a certificate of title prepared by a title insurance company approved by the United States Department of Justice. This title evidence must show fee simple title vested in the surety along with any concurrent owners; whether any real estate taxes are due and payable; and any recorded encumbrances against the property, including the lien filed in favor of the Government as required by FAR 28.203-3(d);

(ii) Evidence of the amount due under any encumbrance shown in the evidence of title;

(iii) A copy of the current real estate tax assessment of the property or a current appraisal dated no earlier than 6 months prior to the date of the bond, prepared by a professional appraiser who certifies that the appraisal has been conducted in accordance with the generally accepted appraisal standards as reflected in the Uniform Standards of Professional Appraisal Practice, as promulgated by the Appraisal Foundation.

(End of clause)

52.229-3 FEDERAL, STATE, AND LOCAL TAXES (JAN 1991)

(a) "Contract date," as used in this clause, means the date set for bid opening or, if this is a negotiated contract or a modification, the effective date of this contract or modification.

"All applicable Federal, State, and local taxes and duties," as used in this clause, means all taxes and duties, in effect on the contract date, that the taxing authority is imposing and collecting on the transactions or property covered by this contract.

"After-imposed Federal tax," as used in this clause, means any new or increased Federal excise tax or duty, or tax that was exempted or excluded on the contract date but whose exemption was later revoked or reduced during the contract period, on the transactions or property covered by this contract that the Contractor is required to pay or bear as the result of legislative, judicial, or administrative action taking effect after the contract date. It does not include social security tax or other employment taxes.
"After-relieved Federal tax," as used in this clause, means any amount of Federal excise tax or duty, except social security or other employment taxes, that would otherwise have been payable on the transactions or property covered by this contract, but which the Contractor is not required to pay or bear, or for which the Contractor obtains a refund or drawback, as the result of legislative, judicial, or administrative action taking effect after the contract date.

(b) The contract price includes all applicable Federal, State, and local taxes and duties.

(c) The contract price shall be increased by the amount of any after-imposed Federal tax, provided the Contractor warrants in writing that no amount for such newly imposed Federal excise tax or duty or rate increase was included in the contract price, as a contingency reserve or otherwise.

(d) The contract price shall be decreased by the amount of any after-relieved Federal tax.

(e) The contract price shall be decreased by the amount of any Federal excise tax or duty, except social security or other employment taxes, that the Contractor is required to pay or bear, or does not obtain a refund of, through the Contractor's fault, negligence, or failure to follow instructions of the Contracting Officer.

(f) No adjustment shall be made in the contract price under this clause unless the amount of the adjustment exceeds $250.

(g) The Contractor shall promptly notify the Contracting Officer of all matters relating to any Federal excise tax or duty that reasonably may be expected to result in either an increase or decrease in the contract price and shall take appropriate action as the Contracting Officer directs.

(h) The Government shall, without liability, furnish evidence appropriate to establish exemption from any Federal, State, or local tax when the Contractor requests such evidence and a reasonable basis exists to sustain the exemption.

(End of clause)

52.229-5 TAXES--CONTRACTS PERFORMED IN U.S. POSSESSIONS OR PUERTO RICO (APR 1984)

The term "local taxes," as used in the Federal, State, and local taxes clause of this contract, includes taxes imposed by a possession of the United States or by Puerto Rico.

(End of clause)

52.232-5 PAYMENTS UNDER FIXED-PRICE CONSTRUCTION CONTRACTS (MAY 1997)

(a) Payment of price. The Government shall pay the Contractor the contract price as provided in this contract.

(b) Progress payments. The Government shall make progress payments monthly as the work proceeds, or at more frequent intervals as determined by the Contracting Officer, on estimates of work accomplished which meets the standards of quality established under the contract, as approved by the Contracting Officer.

(1) The Contractor's request for progress payments shall include the following substantiation:

(i) An itemization of the amounts requested, related to the various elements of work required by the contract covered by the payment requested.

(ii) A listing of the amount included for work performed by each subcontractor under the contract.

(iii) A listing of the total amount of each subcontract under the contract.

(iv) A listing of the amounts previously paid to each such subcontractor under the contract.

(v) Additional supporting data in a form and detail required by the Contracting Officer.

(2) In the preparation of estimates, the Contracting Officer may authorize material delivered on the site and preparatory work done to be taken into consideration. Material delivered to the Contractor at locations other than the site also may be taken into consideration if--

(i) Consideration is specifically authorized by this contract; and

(ii) The Contractor furnishes satisfactory evidence that it has acquired title to such material and that the material will be used to perform this contract.

(c) Contractor certification. Along with each request for progress payments, the Contractor shall furnish the following certification, or payment shall not be made: (However, if the Contractor elects to delete paragraph (c)(4) from the certification, the certification is still acceptable.)

I hereby certify, to the best of my knowledge and belief, that--

(1) The amounts requested are only for performance in accordance with the specifications, terms, and conditions of the contract;

(2) Payments to subcontractors and suppliers have been made from previous payments received under the contract, and timely payments will be made from the proceeds of the payment covered by this certification, in accordance with subcontract agreements and the requirements of chapter 39 of Title 31, United States Code;

(3) This request for progress payments does not include any amounts which the prime contractor intends to withhold or retain from a subcontractor or supplier in accordance with the terms and conditions of the subcontract; and

(4) This certification is not to be construed as final acceptance of a subcontractor's performance.

_____

(Name)

_____

(Title)

_____

(Date)

(d) Refund of unearned amounts. If the Contractor, after making a certified request for progress payments, discovers that a portion or all of such request constitutes a payment for performance by the Contractor that fails to conform to the specifications, terms, and conditions of this contract (hereinafter referred to as the "unearned amount"), the Contractor shall--

(1) Notify the Contracting Officer of such performance deficiency; and

(2) Be obligated to pay the Government an amount (computed by the Contracting Officer

in the manner provided in paragraph (j) of this clause) equal to interest on the unearned amount from the 8th day after the date of receipt of the unearned amount until--

(i) The date the Contractor notifies the Contracting Officer that the performance deficiency has been corrected; or

(ii) The date the Contractor reduces the amount of any subsequent certified request for progress payments by an amount equal to the unearned amount.

(e) Retainage. If the Contracting Officer finds that satisfactory progress was achieved during any period for which a progress payment is to be made, the Contracting Officer shall authorize payment to be made in full. However, if satisfactory progress has not been made, the Contracting Officer may retain a maximum of 10 percent of the amount of the payment until satisfactory progress is achieved. When the work is substantially complete, the Contracting Officer may retain from previously withheld funds and future progress payments that amount the Contracting Officer considers adequate for protection of the Government and shall release to the Contractor all the remaining withheld funds. Also, on completion and acceptance of each separate building, public work, or other division of the contract, for which the price is stated separately in the contract, payment shall be made for the completed work without retention of a percentage.

(f) Title, liability, and reservation of rights. All material and work covered by progress payments made shall, at the time of payment, become the sole property of the Government, but this shall not be construed as--

(1) Relieving the Contractor from the sole responsibility for all material and work upon which payments have been made or the restoration of any damaged work; or

(2) Waiving the right of the Government to require the fulfillment of all of the terms of the contract.

(g) Reimbursement for bond premiums. In making these progress payments, the Government shall, upon request, reimburse the Contractor for the amount of premiums paid for performance and payment bonds (including coinsurance and reinsurance agreements, when applicable) after the Contractor has furnished evidence of full payment to the surety. The retainage provisions in paragraph (e) of this clause shall not apply to that portion of progress payments attributable to bond premiums.

(h) Final payment. The Government shall pay the amount due the Contractor under this contract after--

(1) Completion and acceptance of all work;

(2) Presentation of a properly executed voucher; and

(3) Presentation of release of all claims against

the Government arising by virtue of this contract, other than claims, in stated amounts, that the Contractor has specifically excepted from the operation of the release. A release may also be required of the assignee if the Contractor's claim to amounts payable under this contract has been assigned under the Assignment of Claims Act of 1940 (31 U.S.C. 3727 and 41 U.S.C. 15).

(i) Limitation because of undefinitized work. Notwithstanding any provision of this contract, progress payments shall not exceed 80 percent on work accomplished on undefinitized contract actions. A "contract action" is any action resulting in a contract, as defined in FAR Subpart 2.1, including contract modifications for additional supplies or services, but not including contract modifications that are within the scope and under the terms of the contract, such as contract modifications issued pursuant to the Changes clause, or funding and other administrative changes.

(j) Interest computation on unearned amounts. In accordance with 31 U.S.C. 3903(c)(1), the amount payable under subparagraph (d)(2) of this clause shall be--

(1) Computed at the rate of average bond equivalent rates of 91-day Treasury bills auctioned at the most recent auction of such bills prior to the date the Contractor receives the unearned amount; and

(2) Deducted from the next available payment to the Contractor.

(End of clause)

52.232-17 INTEREST (JUNE 1996)

(a) Except as otherwise provided in this contract under a Price Reduction for Defective Cost or Pricing Data clause or a Cost Accounting Standards clause, all amounts that become payable by the Contractor to the Government under this contract (net of any applicable tax credit under the Internal Revenue Code (26 U.S.C. 1481)) shall bear simple interest from the date due until paid unless paid within 30 days of becoming due. The interest rate shall be the interest rate established by the Secretary of the Treasury as provided in Section 12 of the Contract Disputes Act of 1978 (Public Law 95-563), which is applicable to the period in which the amount becomes due, as provided in paragraph (b) of this clause, and then at the rate applicable for each six-month period as fixed by the Secretary until the amount is paid. reproduce, prepare derivative works, distribute copies to the public, and (b) Amounts shall be due at the earliest of the following dates:

(1) The date fixed under this contract.

(2) The date of the first written demand for payment consistent with this contract, including any demand resulting from a default termination.

(3) The date the Government transmits to the Contractor a proposed supplemental agreement to confirm completed negotiations establishing the amount of debt.

(4) If this contract provides for revision of prices, the date of written notice to the Contractor stating the amount of refund payable in connection with a pricing proposal or a negotiated pricing agreement not confirmed by contract modification.

(c) The interest charge made under this clause may be reduced under the procedures prescribed in 32.614-2 of the Federal Acquisition Regulation in effect on the date of this contract.

(End of clause)

52.232-23 ASSIGNMENT OF CLAIMS (JAN 1986)

(a) The Contractor, under the Assignment of Claims Act, as amended, 31 U.S.C. 3727, 41 U.S.C. 15 (hereafter referred to as "the Act"), may assign its rights to be paid amounts due or to become due as a result of the performance of this contract to a bank, trust company, or other financing institution, including any Federal lending agency. The assignee under such an assignment may thereafter further assign or reassign its right under the original assignment to any type of financing institution described in the preceding sentence.

(b) Any assignment or reassignment authorized under the Act and this clause shall cover all unpaid amounts payable under this contract, and shall not be made to more than one party, except that an assignment or reassignment may be made to one party as agent or trustee for two or more parties participating in the financing of this contract.

(c) The Contractor shall not furnish or disclose to any assignee under this contract any classified document (including this contract) or information related to work under this contract until the Contracting Officer authorizes such action in writing.

(End of clause)

52.232-27 PROMPT PAYMENT FOR CONSTRUCTION CONTRACTS (FEB 2002)

Notwithstanding any other payment terms in this contract, the Government will make invoice payments under the terms and conditions specified in this clause. The Government considers payment as being made on the day a check is dated or the date of an electronic funds transfer. Definitions of pertinent terms are set forth in sections 2.101,

32.001, and 32.902 of the Federal Acquisition Regulation. All days referred to in this clause are calendar days, unless otherwise specified. (However, see paragraph (a)(3) concerning payments due on Saturdays, Sundays, and legal holidays.)

(a) Invoice payments--(1) Types of invoice payments. For purposes of this clause, there are several types of invoice payments that may occur under this contract, as follows:

(i) Progress payments, if provided for elsewhere in this contract, based on Contracting Officer approval of the estimated amount and value of work or services performed, including payments for reaching milestones in any project.

(A) The due date for making such payments is 14 days after the designated billing office receives a proper payment request. If the designated billing office fails to annotate the payment request with the actual date of receipt at the time of receipt, the payment due date is the 14th day after the date of the Contractor's payment request, provided the designated billing office receives a proper payment request and there is no disagreement over quantity, quality, or Contractor compliance with contract requirements.

(B) The due date for payment of any amounts retained by the Contracting Officer in accordance with the clause at 52.232-5, Payments Under Fixed-Price Construction Contracts, is as specified in the contract or, if not specified, 30 days after approval by the Contracting Officer for release to the Contractor.

(ii) Final payments based on completion and acceptance of all work and presentation of release of all claims against the Government arising by virtue of the contract, and payments for partial deliveries that have been accepted by the Government (e.g., each separate building, public work, or other division of the contract for which the price is stated separately in the contract).

(A) The due date for making such payments is the later of the following two events:

(1) The 30th day after the designated billing office receives a proper invoice from the Contractor.

(2) The 30th day after Government acceptance of the work or services completed by the Contractor. For a final invoice when the payment amount is subject to contract settlement actions (e.g., release of claims), acceptance is deemed to occur on the effective date of the contract settlement.

(B) If the designated billing office fails to annotate the invoice with the date of actual receipt at the time of receipt, the invoice payment due date is the 30th day after the date of the Contractor's invoice, provided the designated billing office receives a proper invoice and there is no disagreement over quantity, quality, or Contractor compliance with contract requirements.

(2) Contractor's invoice. The Contractor shall prepare and submit invoices to the designated billing office specified in the contract. A proper invoice must include the items listed in paragraphs (a)(2)(i) through (a)(2)(xi) of this clause. If the invoice does not comply with these requirements, the designated billing office must return it within 7 days after receipt, with the reasons why it is not a proper invoice. When computing any interest penalty owed the Contractor, the Government will take into account if the Government notifies the Contractor of an improper invoice in an untimely manner.

(i) Name and address of the Contractor.

(ii) Invoice date and invoice number. (The Contractor should date invoices as close as possible to the date of mailing or transmission.)

(iii) Contract number or other authorization for work or services performed (including order number and contract line item number).

(iv) Description of work or services performed.

(v) Delivery and payment terms (e.g., discount for prompt payment terms).

(vi) Name and address of Contractor official to whom payment is to be sent (must be the same as that in the contract or in a proper notice of assignment).

(vii) Name (where practicable), title, phone number, and mailing address of person to notify in the event of a defective invoice.

(viii) For payments described in paragraph (a)(1)(i) of this clause, substantiation of the amounts requested and certification in accordance with the requirements of the clause at 52.232-5, Payments Under Fixed-Price Construction Contracts.

(ix) Taxpayer Identification Number (TIN). The Contractor shall include its TIN on the invoice only if required elsewhere in this contract.

(x) Electronic funds transfer (EFT) banking information.

(A) The Contractor shall include EFT banking information on the invoice only if required elsewhere in this contract.

(B) If EFT banking information is not required to be on the invoice, in order for the invoice to be a proper invoice, the Contractor shall have submitted correct EFT banking information in accordance with the applicable solicitation provision (e.g., 52.232-38, Submission of Electronic Funds Transfer Information with Offer), contract clause (e.g., 52.232-33, Payment by Electronic Funds Transfer--Central Contractor Registration, or 52.232-34, Payment by Electronic Funds Transfer--Other Than Central Contractor Registration), or applicable agency procedures.

(C) EFT banking information is not required if the Government waived the requirement to pay by EFT.

(xi) Any other information or documentation required by the contract.

(3) Interest penalty. The designated payment office will pay an interest penalty automatically, without request from the Contractor, if payment is not made by the due date and the conditions listed in paragraphs (a)(3)(i) through (a)(3)(iii) of this clause are met, if applicable. However, when the due date falls on a Saturday, Sunday, or legal holiday, the designated payment office may make payment on the following working day without incurring a late payment interest penalty.

(i) The designated billing office received a proper invoice.

(ii) The Government processed a receiving report or other Government documentation authorizing payment and there was no disagreement over quantity, quality, Contractor compliance with any contract term or condition, or requested progress payment amount.

(iii) In the case of a final invoice for any balance of funds due the Contractor for work or services performed, the amount was not subject to further contract settlement actions between the Government and the Contractor.

(4) Computing penalty amount. The Government will compute the interest penalty in accordance with the Office of Management and Budget prompt payment regulations at 5 CFR part 1315.

(i) For the sole purpose of computing an interest penalty that might be due the Contractor for payments described in paragraph (a)(1)(ii) of this clause, Government acceptance or approval is deemed to occur constructively on the 7th day after the Contractor has completed the work or services in accordance with the terms and conditions of the contract. If actual acceptance or approval occurs within the constructive acceptance or approval period, the Government will base the determination of an interest penalty on the actual date of acceptance or approval. Constructive acceptance or constructive approval requirements do not apply if there is a disagreement over quantity, quality, or Contractor compliance with a contract provision. These requirements also do not compel Government officials to accept work or services, approve Contractor estimates, perform contract administration functions, or make payment prior to fulfilling their responsibilities.

(ii) The prompt payment regulations at 5 CFR 1315.10(c) do not require the Government to pay interest penalties if payment delays are due to disagreement between the Government and the Contractor over the payment amount or other issues involving contract compliance, or on amounts temporarily withheld or retained in accordance with the terms of the contract. The Government and the Contractor shall resolve claims involving disputes, and any interest that may be payable in accordance with the clause at FAR 52.233-1, Disputes.

(5) Discounts for prompt payment. The designated payment office will pay an interest penalty automatically, without request from the Contractor, if the Government takes a discount for prompt payment improperly. The Government will calculate the interest penalty in accordance with the prompt payment regulations at 5 CFR part 1315.

(6) Additional interest penalty. (i) The designated payment office will pay a penalty amount, calculated in accordance with the prompt payment regulations at 5 CFR part 1315 in addition to the interest penalty amount only if--

(A) The Government owes an interest penalty of $1 or more;

(B) The designated payment office does not pay the interest penalty within 10 days after the date the invoice amount is paid; and

(C) The Contractor makes a written demand to the designated payment office for additional penalty payment, in accordance with paragraph (a)(6)(ii) of this clause, postmarked not later than 40 days after the date the invoice amount is paid.

(ii)(A) The Contractor shall support written demands for additional penalty payments with the following data. The Government will not request any additional data. The Contractor shall--

(1) Specifically assert that late payment interest is due under a specific invoice, and request payment of all overdue late payment interest penalty and such additional penalty as may be required;

(2) Attach a copy of the invoice on which the unpaid late payment interest was due; and

(3) State that payment of the principal has been received, including the date of receipt.

(B) If there is no postmark or the postmark is illegible--

(1) The designated payment office that receives the demand will annotate it with the date of receipt provided the demand is received on or before the 40th day after payment was made; or

(2) If the designated payment office fails to make the required annotation, the Government will determine the demand's validity based on the date the Contractor has placed on the demand, provided such date is no later than the 40th day after payment was made.

(b) Contract financing payments. If this contract provides for contract financing, the Government will make contract financing payments in accordance with the applicable contract financing clause.

(c) Subcontract clause requirements. The Contractor shall include in each subcontract for property or services (including a material supplier) for the purpose of performing this contract the following:

(1) Prompt payment for subcontractors. A payment clause that obligates the Contractor to pay the subcontractor for satisfactory performance under its subcontract not later than 7 days from receipt of payment out of such amounts as are paid to the Contractor under this contract.

(2) Interest for subcontractors. An interest penalty clause that obligates the Contractor to pay to the subcontractor an interest penalty for each payment not made in accordance with the payment clause--

(i) For the period beginning on the day after the required payment date and ending on the date on which payment of the amount due is made; and

(ii) Computed at the rate of interest established by the Secretary of the Treasury, and published in the Federal Register, for interest payments under section 12 of the Contract Disputes Act of 1978 (41 U.S.C. 611) in effect at the time the Contractor accrues the obligation to pay an interest penalty.

(3) Subcontractor clause flowdown. A clause requiring each subcontractor to use:

(i) Include a payment clause and an interest penalty clause conforming to the standards set forth in paragraphs (c)(1) and (c)(2) of this clause in each of its subcontracts; and

(ii) Require each of its subcontractors to include such clauses in their subcontracts with each lower-tier subcontractor or supplier.

(d) Subcontract clause interpretation. The clauses required by paragraph (c) of this clause shall not be construed to impair the right of the Contractor or a subcontractor at any tier to negotiate, and to include in their subcontract, provisions that--

(1) Retainage permitted. Permit the Contractor or a subcontractor to retain (without cause) a specified percentage of each progress payment otherwise due to a subcontractor for satisfactory performance under the subcontract without incurring any obligation to pay a late payment interest penalty, in accordance with terms and conditions agreed to by the parties to the subcontract, giving such recognition as the parties deem appropriate to the ability of a subcontractor to furnish a performance bond and a payment bond;

(2) Withholding permitted. Permit the Contractor or subcontractor to make a determination that part or all of the subcontractor's request for payment may be withheld in accordance with the subcontract agreement; and

(3) Withholding requirements. Permit such withholding without incurring any obligation to pay a late payment penalty if--

(i) A notice conforming to the standards of paragraph (g) of this clause previously has been furnished to the subcontractor; and

(ii) The Contractor furnishes to the Contracting Officer a copy of any notice issued by a Contractor pursuant to paragraph (d)(3)(i) of this clause.

(e) Subcontractor withholding procedures. If a Contractor, after making a request for payment to the Government but before making a payment to a subcontractor for the subcontractor's performance covered by the payment request, discovers that all or a portion of the payment otherwise due such subcontractor is subject to withholding from the subcontractor in accordance with the subcontract agreement, then the Contractor shall--

(1) Subcontractor notice. Furnish to the subcontractor a notice conforming to the standards of paragraph (g) of this clause as soon as practicable upon ascertaining the cause giving rise to a withholding, but prior to the due date for subcontractor payment;

(2) Contracting Officer notice. Furnish to the Contracting Officer, as soon as practicable, a copy of the notice furnished to the subcontractor pursuant to paragraph (e)(1) of this clause;

(3) Subcontractor progress payment reduction. Reduce the subcontractor's progress payment by an amount not to exceed the amount specified in the notice of withholding furnished under paragraph (e)(1) of this clause;

(4) Subsequent subcontractor payment. Pay the subcontractor as soon as practicable after the correction of the identified subcontract performance deficiency, and--

(i) Make such payment within--

(A) Seven days after correction of the identified subcontract performance deficiency (unless the funds therefor must be recovered from the Government because of a reduction under paragraph
(e)(5)(i)) of this clause; or

(B) Seven days after the Contractor recovers such funds from the Government; or

(ii) Incur an obligation to pay a late payment interest penalty computed at the rate of interest established by the Secretary of the Treasury, and published in the Federal Register, for interest payments under section 12 of the Contracts Disputes Act of 1978 (41 U.S.C. 611) in effect at the time the Contractor accrues the obligation to pay an interest penalty;

(5) Notice to Contracting Officer. Notify the Contracting Officer upon--

(i) Reduction of the amount of any subsequent certified application for payment; or

(ii) Payment to the subcontractor of any withheld amounts of a progress payment, specifying--

(A) The amounts withheld under paragraph (e)(1) of this clause; and

(B) The dates that such withholding began and ended; and

(6) Interest to Government. Be obligated to pay to the Government an amount equal to interest on the withheld payments (computed in the manner provided in 31 U.S.C. 3903(c)(1)), from the 8th day after receipt of the withheld amounts from the Government until--

(i) The day the identified subcontractor performance deficiency is corrected; or

(ii) The date that any subsequent payment is reduced under paragraph (e)(5)(i) of this clause.

(f) Third-party deficiency reports--(1) Withholding from subcontractor. If a Contractor, after making payment to a first-tier subcontractor, receives from a supplier or subcontractor of the first-tier subcontractor (hereafter referred to as a “second-tier subcontractor”) a written notice in accordance with section 2 of the Act of August 24, 1935 (40 U.S.C. 270b, Miller Act), asserting a deficiency in such first-tier subcontractor's performance under the contract for which the Contractor may be ultimately liable, and the Contractor determines that all or a portion of future payments otherwise due such first-tier subcontractor is subject to withholding in accordance with the subcontract agreement, the Contractor may, without incurring an obligation to pay an interest penalty under paragraph (e)(6) of this clause--

(i) Furnish to the first-tier subcontractor a notice conforming to the standards of paragraph (g) of this clause as soon as practicable upon making such determination; and

(ii) Withhold from the first-tier subcontractor's next available progress payment or payments an amount not to exceed the amount specified in the notice of withholding furnished under paragraph (f)(1)(i) of this clause.

(2) Subsequent payment or interest charge. As soon as practicable, but not later than 7 days after receipt of satisfactory written notification that the identified subcontract performance deficiency has been corrected, the Contractor shall--

(i) Pay the amount withheld under paragraph (f)(1)(ii) of this clause to such first-tier subcontractor; or

(ii) Incur an obligation to pay a late payment interest penalty to such first-tier subcontractor computed at the rate of interest established by the Secretary of the

Treasury, and published in the Federal Register, for interest payments under section 12 of the Contracts DisputesAct of 1978 (41 U.S.C. 611) in effect at the time the Contractor accrues the obligation to pay an interest penalty.

(g) Written notice of subcontractor withholding. The Contractor shall issue a written notice of any withholding to a subcontractor (with a copy furnished to the Contracting Officer), specifying--

(1) The amount to be withheld;

(2) The specific causes for the withholding under the terms of the subcontract; and

(3) The remedial actions to be taken by the subcontractor in order to receive payment of the amounts withheld.

(h) Subcontractor payment entitlement. The Contractor may not request payment from the Government of any amount withheld or retained in accordance with paragraph (d) of this clause until such time as the Contractor has determined and certified to the Contracting Officer that the subcontractor is entitled to the payment of such amount.

(i) Prime-subcontractor disputes. A dispute between the Contractor and subcontractor relating to the amount or entitlement of a subcontractor to a payment or a late payment interest penalty under a clause included in the subcontract pursuant to paragraph (c) of this clause does not constitute a dispute to which the Government is a party. The Government may not be interpleaded in any judicial or administrative proceeding involving such a dispute.

(j) Preservation of prime-subcontractor rights. Except as provided in paragraph (i) of this clause, this clause shall not limit or impair any contractual, administrative, or judicial remedies otherwise available to the Contractor or a subcontractor in the event of a dispute involving late payment or nonpayment by the Contractor or deficient subcontract performance or nonperformance by a subcontractor.

(k) Non-recourse for prime contractor interest penalty. The Contractor's obligation to pay an interest penalty to a subcontractor pursuant to the clauses included in a subcontract under paragraph (c) of this clause shall not be construed to be an obligation of the Government for such interest penalty. A cost-reimbursement claim may not include any amount for reimbursement of such interest penalty.

(l) Overpayments. If the Contractor becomes aware of a duplicate payment or that the Government has otherwise overpaid on an invoice payment, the Contractor shall immediately notify the Contracting Officer and request instructions for disposition of the overpayment.

(End of clause)

52.233-1 Disputes. (JUL 2002)

(a) This contract is subject to the Contract Disputes Act of 1978, as amended (41 U.S.C. 601-613).

(b) Except as provided in the Act, all disputes arising under or relating to this contract shall be resolved under this clause.

(c) Claim, as used in this clause, means a written demand or written assertion by one of the contracting parties seeking, as a matter of right, the payment of money in a sum certain, the adjustment or interpretation of contract terms, or other relief arising under or relating to this contract. However, a written demand or written assertion by the Contractor seeking the payment of money exceeding $100,000 is not a claim under the Act until certified. A voucher, invoice, or other routine request for payment that is not in dispute when submitted is not a claim under the Act. The submission may be converted to a claim under the Act, by complying with the submission and certification requirements of this clause, if it is disputed either as to liability or amount or is not acted upon in a reasonable time.

(d)(1) A claim by the Contractor shall be made in writing and, unless otherwise stated in this contract, submitted within 6 years after accrual of the claim to the Contracting Officer for a written decision. A claim by the Government against the Contractor shall be subject to a written decision by the Contracting Officer.

(2)(i) The contractors shall provide the certification specified in subparagraph (d)(2)(iii) of this clause when submitting any claim -

(A) Exceeding $100,000; or

(B) Regardless of the amount claimed, when using -

(1) Arbitration conducted pursuant to 5 U.S.C. 575-580; or

(2) Any other alternative means of dispute resolution (ADR) technique that the agency elects to handle in accordance with the Administrative Dispute Resolution Act (ADRA).

(ii) The certification requirement does not apply to issues in controversy that have not been submitted as all or part of a claim.

(iii) The certification shall state as follows: "I certify that the claim is made in good faith; that the supporting data are accurate and complete to the best of my knowledge and belief; that the amount requested accurately reflects the contract adjustment for which the Contractor believes the Government is liable; and that I am duly authorized to certify the

claim on behalf of the Contractor.

(3) The certification may be executed by any person duly authorized to bind the Contractor with respect to the claim.

(e) For Contractor claims of $100,000 or less, the Contracting Officer must, if requested in writing by the Contractor, render a decision within 60 days of the request. For Contractor-certified claims over $100,000, the Contracting Officer must, within 60 days, decide the claim or notify the Contractor of the date by which the decision will be made.

(f) The Contracting Officer's decision shall be final unless the Contractor appeals or files a suit as provided in the Act.

(g) If the claim by the Contractor is submitted to the Contracting Officer or a claim by the Government is presented to the Contractor, the parties, by mutual consent, may agree to use alternative disput resolution (ADR). If the Contractor refuses an offer for ADR, the Contractor shall inform the Contracting Officer, in writing, of the Contractor's specific reasons for rejecting the request.

(h) The Government shall pay interest on the amount found due and unpaid from (1) the date the Contracting Officer receives the claim (certified, if required); or (2) the date that payment otherwise would be due, if that date is later, until the date of payment. With regard to claims having defective certifications, as defined in (FAR) 48 CFR 33.201, interest shall be paid from the date that the Contracting Officer initially receives the claim. Simple interest on claims shall be paid at the rate, fixed by the Secretary of the Treasury as provided in the Act, which is applicable to the period during which the Contracting Officer receives the claim and then at the rate applicable for each 6-month period as fixed by the Treasury Secretary during the pendency of the claim.

(i) The Contractor shall proceed diligently with performance of this contract, pending final resolution of any request for relief, claim, appeal, or action arising under the contract, and comply with any decision of the Contracting Officer.

(End of clause)

52.233-3 PROTEST AFTER AWARD (AUG. 1996)

(a) Upon receipt of a notice of protest (as defined in FAR 33.101) or a determination that a protest is likely (see FAR 33.102(d)), the Contracting Officer may, by written order to the Contractor, direct the Contractor to stop performance of the work called for by this contract. The order shall be specifically identified as a stop-work order issued under this clause. Upon receipt of the order, the Contractor shall immediately comply with its terms and take all reasonable steps to minimize the incurrence of costs allocable to the work covered by the order during the period of work stoppage. Upon receipt of the final decision in the protest, the Contracting Officer shall either--

(1) Cancel the stop-work order; or

(2) Terminate the work covered by the order as provided in the Default, or the Termination for Convenience of the Government, clause of this contract.

(b) If a stop-work order issued under this clause is canceled either before or after a final decision in the protest, the Contractor shall resume work. The Contracting Officer shall make an equitable adjustment in the delivery schedule or contract price, or both, and the contract shall be modified, in writing, accordingly, if--

(1) The stop-work order results in an increase in the time required for, or in the Contractor's cost properly allocable to, the performance of any part of this contract; and

(2) The Contractor asserts its right to an adjustment within 30 days after the end of the period of work stoppage; provided, that if the Contracting Officer decides the facts justify the action, the Contracting Officer may receive and act upon a proposal at any time before final payment under this contract.

(c) If a stop-work order is not canceled and the work covered by the order is terminated for the convenience of the Government, the Contracting Officer shall allow reasonable costs resulting from the stop-work order in arriving at the termination settlement.

(d) If a stop-work order is not canceled and the work covered by the order is terminated for default, the Contracting Officer shall allow, by equitable adjustment or otherwise, reasonable costs resulting from the stop-work order.

(e) The Government's rights to terminate this contract at any time are not affected by action taken under this clause.

(f) If, as the result of the Contractor's intentional or negligent misstatement, misrepresentation, or miscertification, a protest related to this contract is sustained, and the Government pays costs, as provided in FAR 33.102(b)(2) or 33.104(h)(1), the Government may require the Contractor to reimburse the Government the amount of such costs. In addition to any other remedy available, and pursuant to the requirements of Subpart 32.6, the Government may collect this debt by offsetting the amount against any payment due the Contractor under any contract between the Contractor and the Government.

(End of clause)

52.236-2 DIFFERING SITE CONDITIONS (APR 1984)

As prescribed in 36.502, insert the following clause in solicitations and contracts when a fixed-price construction contract or a fixed-price dismantling, demolition, or removal of

improvements contract is contemplated and the contract amount is expected to exceed the small purchase limitation. The Contracting Officer may insert the clause in solicitations and contracts when a fixed-price construction or a fixed-price contract for dismantling, demolition, or removal of improvements is contemplated and the contract amount is expected to be within the small purchase limitation.

(a) The Contractor shall promptly, and before the conditions are disturbed, give a written notice to the Contracting Officer of

(1) subsurface or latent physical conditions at the site which differ materially from those indicated in this contract, or

(2) unknown physical conditions at the site, of an unusual nature, which differ materially from those ordinarily encountered and generally recognized as inhering in work of the character provided for in the contract.

(b) The Contracting Officer shall investigate the site conditions promptly after receiving the notice. If the conditions do materially so differ and cause an increase or decrease in the Contractor's cost of, or the time required for, performing any part of the work under this contract, whether or not changed as a result of the conditions, an equitable adjustment shall be made under this clause and the contract modified in writing accordingly.

(c) No request by the Contractor for an equitable adjustment to the contract under this clause shall be allowed, unless the Contractor has given the written notice required; provided, that the time prescribed in (a) above for giving written notice may be extended by the Contracting Officer.

(d) No request by the Contractor for an equitable adjustment to the contract for differing site conditions shall be allowed if made after final payment under this contract.

(End of clause)

52.236-3 SITE INVESTIGATION AND CONDITIONS AFFECTING THE WORK (APR 1984)

(a) The Contractor acknowledges that it has taken steps reasonably necessary to ascertain the nature and location of the work, and that it has investigated and satisfied itself as to the general and local conditions which can affect the work or its cost, including but not limited to

(1) conditions bearing upon transportation, disposal, handling, and storage of materials;

(2) the availability of labor, water, electric power, and roads;

(3) uncertainties of weather, river stages, tides, or similar physical conditions at the site;

(4) the conformation and conditions of the ground; and (5) the character of equipment and facilities needed preliminary to and during work performance. The Contractor also acknowledges that it has satisfied itself as to the character, quality, and quantity of surface and subsurface materials or obstacles to be encountered insofar as this information is reasonably ascertainable from an inspection of the site, including all exploratory work done by the Government, as well as from the drawings and specifications made a part of this contract. Any failure of the Contractor to take the actions described and acknowledged in this paragraph will not relieve the Contractor from responsibility for estimating properly the difficulty and cost of successfully performing the work, or for proceeding to successfully perform the work without additional expense to the Government.

(b) The Government assumes no responsibility for any conclusions or interpretations made by the Contractor based on the information made available by the Government. Nor does the Government assume responsibility for any understanding reached or representation made concerning conditions which can affect the work by any of its officers or agents before the execution of this contract, unless that understanding or representation is expressly stated in this contract.

(End of clause)

52.236-5 MATERIAL AND WORKMANSHIP (APR 1984)

(a) All equipment, material, and articles incorporated into the work covered by this contract shall be new and of the most suitable grade for the purpose intended, unless otherwise specifically provided in this contract. References in the specifications to equipment, material, articles, or patented processes by trade name, make, or catalog number, shall be regarded as establishing a standard of quality and shall not be construed as limiting competition. The Contractor may, at its option, use any equipment, material, article, or process that, in the judgment of the Contracting Officer, is equal to that named in the specifications, unless otherwise specifically provided in this contract.

(b) The Contractor shall obtain the Contracting Officer's approval of the machinery and mechanical and other equipment to be incorporated into the work. When requesting approval, the Contractor shall furnish to the Contracting Officer the name of the manufacturer, the model number, and other information concerning the performance, capacity, nature, and rating of the machinery and mechanical and other equipment. When required by this contract or by the Contracting Officer, the Contractor shall also obtain the Contracting Officer's approval of the material or articles which the Contractor contemplates incorporating into the work. When requesting approval, the Contractor shall provide full information concerning the material or articles. When directed to do so, the Contractor shall submit samples for approval at the Contractor's expense, with all shipping charges prepaid. Machinery, equipment, material, and articles that do not have

the required approval shall be installed or used at the risk of subsequent rejection.

(c) All work under this contract shall be performed in a skillful and workmanlike manner. The Contracting Officer may require, in writing, that the Contractor remove from the work any employee the Contracting Officer deems incompetent, careless, or otherwise objectionable.

(End of clause)

52.236-6 SUPERINTENDENCE BY THE CONTRACTOR (APR 1984)

At all times during performance of this contract and until the work is completed and accepted, the Contractor shall directly superintend the work or assign and have on the worksite a competent superintendent who is satisfactory to the Contracting Officer and has authority to act for the Contractor.

(End of clause)

52.236-7 PERMITS AND RESPONSIBILITIES (NOV 1991)

The Contractor shall, without additional expense to the Government, be responsible for obtaining any necessary licenses and permits, and for complying with any Federal, State, and municipal laws, codes, and regulations applicable to the performance of the work. The Contractor shall also be responsible for all damages to persons or property that occur as a result of the Contractor's fault or negligence. The Contractor shall also be responsible for all materials delivered and work performed until completion and acceptance of the entire work, except for any completed unit of work which may have been accepted under the contract.

(End of clause)

52.236-8 OTHER CONTRACTS (APR 1984)

The Government may undertake or award other contracts for additional work at or near the site of the work under this contract. The Contractor shall fully cooperate with the other contractors and with Government employees and shall carefully adapt scheduling and performing the work under this contract to accommodate the additional work, heeding any direction that may be provided by the Contracting Officer. The Contractor

shall not commit or permit any act that will interfere with the performance of work by any other contractor or by Government employees.

(End of clause)

52.236-9 PROTECTION OF EXISTING VEGETATION, STRUCTURES, EQUIPMENT, UTILITIES, AND IMPROVEMENTS (APR 1984)

(a) The Contractor shall preserve and protect all structures, equipment, and vegetation (such as trees, shrubs, and grass) on or adjacent to the work site, which are not to be removed and which do not unreasonably interfere with the work required under this contract. The Contractor shall only remove trees when specifically authorized to do so, and shall avoid damaging vegetation that will remain in place. If any limbs or branches of trees are broken during contract performance, or by the careless operation of equipment, or by workmen, the Contractor shall trim those limbs or branches with a clean cut and paint the cut with a tree-pruning compound as directed by the Contracting Officer.

(b) The Contractor shall protect from damage all existing improvements and utilities

(1) at or near the work site, and

(2) on adjacent property of a third party, the locations of which are made known to or should be known by the Contractor. The Contractor shall repair any damage to those facilities, including those that are the property of a third party, resulting from failure to comply with the requirements of this contract or failure to exercise reasonable care in performing the work. If the Contractor fails or refuses to repair the damage promptly, the Contracting Officer may have the necessary work performed and charge the cost to the Contractor.

(End of clause)

52.236-10 OPERATIONS AND STORAGE AREAS (APR 1984)

(a) The Contractor shall confine all operations (including storage of materials) on Government premises to areas authorized or approved by the Contracting Officer. The Contractor shall hold and save the Government, its officers and agents, free and harmless from liability of any nature occasioned by the Contractor's performance.

(b) Temporary buildings (e.g., storage sheds, shops, offices) and utilities may be erected by the Contractor only with the approval of the Contracting Officer and shall be built with labor and materials furnished by the Contractor without expense to the Government. The temporary buildings and utilities shall remain the property of the Contractor and

shall be removed by the Contractor at its expense upon completion of the work. With the written consent of the Contracting Officer, the buildings and utilities may be abandoned and need not be removed.

(c) The Contractor shall, under regulations prescribed by the Contracting Officer, use only established roadways, or use temporary roadways constructed by the Contractor when and as authorized by the Contracting Officer. When materials are transported in prosecuting the work, vehicles shall not be loaded beyond the loading capacity recommended by the manufacturer of the vehicle or prescribed by any Federal, State, or local law or regulation. When it is necessary to cross curbs or sidewalks, the Contractor shall protect them from damage. The Contractor shall repair or pay for the repair of any damaged curbs, sidewalks, or roads.

(End of clause)

52.236-11 USE AND POSSESSION PRIOR TO COMPLETION (APR 1984)

(a) The Government shall have the right to take possession of or use any completed or partially completed part of the work. Before taking possession of or using any work, the Contracting Officer shall furnish the Contractor a list of items of work remaining to be performed or corrected on those portions of the work that the Government intends to take possession of or use. However, failure of the Contracting Officer to list any item of work shall not relieve the Contractor of responsibility for complying with the terms of the contract. The Government's possession or use shall not be deemed an acceptance of any work under the contract.

(b) While the Government has such possession or use, the Contractor shall be relieved of the responsibility for the loss of or damage to the work resulting from the Government's possession or use, notwithstanding the terms of the clause in this contract entitled "Permits and Responsibilities." If prior possession or use by the Government delays the progress of the work or causes additional expense to the Contractor, an equitable adjustment shall be made in the contract price or the time of completion, and the contract shall be modified in writing accordingly.

(End of clause)

52.236-12 CLEANING UP (APR 1984)

The Contractor shall at all times keep the work area, including storage areas, free from accumulations of waste materials. Before completing the work, the Contractor shall remove from the work and premises any rubbish, tools, scaffolding, equipment, and materials that are not the property of the Government. Upon completing the work, the Contractor shall leave the work area in a clean, neat, and orderly condition satisfactory to the Contracting Officer.

(End of clause)

52.236-13 ACCIDENT PREVENTION (NOV 1991) – ALTERNATE I (NOV 1991)

(a) The Contractor shall provide and maintain work environments and procedures which will

(1) safeguard the public and Government personnel, property, materials, supplies, and equipment exposed to Contractor operations and activities;

(2) avoid interruptions of Government operations and delays in project completion dates; and

(3) control costs in the performance of this contract.

(b) For these purposes on contracts for construction or dismantling, demolition, or removal of improvements, the Contractor shall-

(1) Provide appropriate safety barricades, signs, and signal lights;

(2) Comply with the standards issued by the Secretary of Labor at 29 CFR Part 1926 and 29 CFR Part 1910; and

(3) Ensure that any additional measures the Contracting Officer determines to be reasonably necessary for the purposes are taken.

(c) If this contract is for construction or dismantling, demolition or removal of improvements with any Department of Defense agency or component, the Contractor shall comply with all pertinent provisions of the latest version of U.S. Army Corps of Engineers Safety and Health Requirements Manual, EM 385-1-1, in effect on the date of the solicitation.

(i) Whenever the Contracting Officer becomes aware of any noncompliance with these requirements or any condition which poses a serious or imminent danger to the health or safety of the public or Government personnel, the Contracting Officer shall notify the Contractor orally, with written confirmation, and request immediate initiation of corrective action. This notice, when delivered to the Contractor or the Contractor's representative at the work site, shall be deemed sufficient notice of the noncompliance and that corrective action is required. After receiving the notice, the Contractor shall immediately take corrective action. If the Contractor fails or refuses to promptly take corrective action, the Contracting Officer may issue an order stopping all or part of the work until satisfactory corrective action has been taken. The Contractor shall not be entitled to any equitable adjustment of the contract price or extension of the performance schedule on any stop work order issued under this clause.

(e) The Contractor shall insert this clause, including this paragraph (e), with appropriate changes in the designation of the parties, in subcontracts.

(f) Before commencing the work, the Contractor shall-

(1) Submit a written proposed plan for implementing this clause. The plan shall include an analysis of the significant hazards to life, limb, and property inherent in contract work performance and a plan for controlling these hazards; and

(2) Meet with representatives of the Contracting Officer to discuss and develop a mutual understanding relative to administration of the overall safety program.

(End of clause)

52.236-15 SCHEDULES FOR CONSTRUCTION CONTRACTS (APR 1984)

(a) The Contractor shall, within five days after the work commences on the contract or another period of time determined by the Contracting Officer, prepare and submit to the Contracting Officer for approval three copies of a practicable schedule showing the order in which the Contractor proposes to perform the work, and the dates on which the Contractor contemplates starting and completing the several salient features of the work (including acquiring materials, plant, and equipment). The schedule shall be in the form of a progress chart of suitable scale to indicate appropriately the percentage of work scheduled for completion by any given date during the period. If the Contractor fails to submit a schedule within the time prescribed, the Contracting Officer may withhold approval of progress payments until the Contractor submits the required schedule.

(b) The Contractor shall enter the actual progress on the chart as directed by the Contracting Officer, and upon doing so shall immediately deliver three copies of the annotated schedule to the Contracting Officer. If, in the opinion of the Contracting Officer, the Contractor falls behind the approved schedule, the Contractor shall take steps necessary to improve its progress, including those that may be required by the Contracting Officer, without additional cost to the Government. In this circumstance, the Contracting Officer may require the Contractor to increase the number of shifts, overtime operations, days of work, and/or the amount of construction plant, and to submit for approval any supplementary schedule or schedules in chart form as the Contracting Officer deems necessary to demonstrate how the approved rate of progress will be regained.

(c) Failure of the Contractor to comply with the requirements of the Contracting Officer under this clause shall be grounds for a determination by the Contracting Officer that the Contractor is not prosecuting the work with sufficient diligence to ensure completion within the time specified in the contract. Upon making this determination, the

Contracting Officer may terminate the Contractor's right to proceed with the work, or any separable part of it, in accordance with the default terms of this contract.

(End of clause)

52.236-17 LAYOUT OF WORK (APR 1984)

The Contractor shall lay out its work from Government established base lines and bench marks indicated on the drawings, and shall be responsible for all measurements in connection with the layout. The Contractor shall furnish, at its own expense, all stakes, templates, platforms, equipment, tools, materials, and labor required to lay out any part of the work. The Contractor shall be responsible for executing the work to the lines and grades that may be established or indicated by the Contracting Officer. The Contractor shall also be responsible for maintaining and preserving all stakes and other marks established by the Contracting Officer until authorized to remove them. If such marks are destroyed by the Contractor or through its negligence before their removal is authorized, the Contracting Officer may replace them and deduct the expense of the replacement from any amounts due or to become due to the Contractor.

(End of clause)

52.236-21 SPECIFICATIONS AND DRAWINGS FOR CONSTRUCTION (FEB 1997) - ALTERNATE I (APR 1984

(a) The Contractor shall keep on the work site a copy of the drawings and specifications and shall at all times give the Contracting Officer access thereto. Anything mentioned in the specifications and not shown on the drawings, or shown on the drawings and not mentioned in the specifications, shall be of like effect as if shown or mentioned in both. In case of difference between drawings and specifications, the specifications shall govern. In case of discrepancy in the figures, in the drawings, or in the specifications, the matter shall be promptly submitted to the Contracting Officer, who shall promptly make a determination in writing. Any adjustment by the Contractor without such a determination shall be at its own risk and expense. The Contracting Officer shall furnish from time to time such detailed drawings and other information as considered necessary, unless otherwise provided.

(b) Wherever in the specifications or upon the drawings the words "directed", "required", "ordered", "designated", "prescribed", or words of like import are used, it shall be understood that the "direction", "requirement", "order", "designation", or "prescription", of the Contracting Officer is intended and similarly the words "approved", "acceptable", "satisfactory", or words of like import shall mean "approved by," or "acceptable to", or

"satisfactory to" the Contracting Officer, unless otherwise expressly stated.

(c) Where "as shown," as indicated", "as detailed", or words of similar import are used, it shall be understood that the reference is made to the drawings accompanying this contract unless stated otherwise. The word "provided" as used herein shall be understood to mean "provide complete in place," that is "furnished and installed".

(d) Shop drawings means drawings, submitted to the Government by the Contractor, subcontractor, or any lower tier subcontractor pursuant to a construction contract, showing in detail (1) the proposed fabrication and assembly of structural elements, and (2) the installation (i.e., fit, and attachment details) of materials or equipment. It includes drawings, diagrams, layouts, schematics, descriptive literature, illustrations, schedules, performance and test data, and similar materials furnished by the contractor to explain in detail specific portions of the work required by the contract. The Government may duplicate, use, and disclose in any manner and for any purpose shop drawings delivered under this contract.

(e) If this contract requires shop drawings, the Contractor shall coordinate all such drawings, and review them for accuracy, completeness, and compliance with contract requirements and shall indicate its approval thereon as evidence of such coordination and review. Shop drawings submitted to the Contracting Officer without evidence of the Contractor's approval may be returned for resubmission. The Contracting Officer will indicate an approval or disapproval of the shop drawings and if not approved as submitted shall indicate the Government's reasons therefor. Any work done before such approval shall be at the Contractor's risk. Approval by the Contracting Officer shall not relieve the Contractor from responsibility for any errors or omissions in such drawings, nor from responsibility for complying with the requirements of this contract, except with respect to variations described and approved in accordance with (f) below.

(f) If shop drawings show variations from the contract requirements, the Contractor shall describe such variations in writing, separate from the drawings, at the time of submission. If the Contracting Officer approves any such variation, the Contracting Officer shall issue an appropriate contract modification, except that, if the variation is minor or does not involve a change in price or in time of performance, a modification need not be issued.

(g) The Contractor shall submit to the Contracting Officer for approval four copies (unless otherwise indicated) of all shop drawings as called for under the various headings of these specifications. Three sets (unless otherwise indicated) of all shop drawings, will be retained by the Contracting Officer and one set will be returned to the Contractor. Upon completing the work under this contract, the Contractor shall furnish a complete set of all shop drawings as finally approved. These drawings shall show all changes and revisions made up to the time the equipment is completed and accepted.

(End of clause)

52.236-26 PRECONSTRUCTION CONFERENCE (FEB 1995)

If the Contracting Officer decides to conduct a preconstruction conference, the successful offeror will be notified and will be required to attend. The Contracting Officer's notification will include specific details regarding the date, time, and location of the conference, any need for attendance by subcontractors, and information regarding the items to be discussed.

(End of clause)

52.242-13 BANKRUPTCY (JUL 1995)

In the event the Contractor enters into proceedings relating to bankruptcy, whether voluntary or involuntary, the Contractor agrees to furnish, by certified mail or electronic commerce method authorized by the contract, written notification of the bankruptcy to the Contracting Officer responsible for administering the contract. This notification shall be furnished within five days of the initiation of the proceedings relating to bankruptcy filing. This notification shall include the date on which the bankruptcy petition was filed, the identity of the court in which the bankruptcy petition was filed, and a listing of Government contract numbers and contracting offices for all Government contracts against which final payment has not been made. This obligation remains in effect until final payment under this contract.

(End of clause)

52.242-14 SUSPENSION OF WORK (APR 1984)

(a) The Contracting Officer may order the Contractor, in writing, to suspend, delay, or interrupt all or any part of the work of this contract for the period of time that the Contracting Officer determines appropriate for the convenience of the Government.

(b) If the performance of all or any part of the work is, for an unreasonable period of time, suspended, delayed, or interrupted (1) by an act of the Contracting Officer in the administration of this contract, or (2) by the Contracting Officer's failure to act within the time specified in this contract (or within a reasonable time if not specified), an adjustment shall be made for any increase in the cost of performance of this contract (excluding profit) necessarily caused by the unreasonable suspension, delay, or interruption, and the contract modified in writing accordingly. However, no adjustment shall be made under this clause for any suspension, delay, or interruption to the extent that performance would have been so suspended, delayed, or interrupted by any other cause, including the fault or

negligence of the Contractor, or for which an equitable adjustment is provided for or excluded under any other term or condition of this contract. (c) A claim under this clause shall not be allowed (1) for any costs incurred more than 20 days before the Contractor shall have notified the Contracting Officer in writing of the act or failure to act involved (but this requirement shall not apply as to a claim resulting from a suspension order), and (2) unless the claim, in an amount stated, is asserted in writing as soon as practicable after the termination of the suspension, delay, or interruption, but not later than the date of final payment under the contract.

(End of clause)

52.243-4 CHANGES (AUG 1987)

(a) The Contracting Officer may, at any time, without notice to the sureties, if any, by written order designated or indicated to be a change order, make changes in the work within the general scope of the contract, including changes--

(1) In the specifications (including drawings and designs);

(2) In the method or manner of performance of the work;

(3) In the Government-furnished facilities, equipment, materials, services, or site; or

(4) Directing acceleration in the performance of the work.

(b) Any other written or oral order (which, as used in this paragraph (b), includes direction, instruction, interpretation, or determination) from the Contracting Officer that causes a change shall be treated as a change order under this clause; provided, that the Contractor gives the Contracting Officer written notice stating

(1) the date, circumstances, and source of the order and

(2) that the Contractor regards the order as a change order.

(c) Except as provided in this clause, no order, statement, or conduct of the Contracting Officer shall be treated as a change under this clause or entitle the Contractor to an equitable adjustment.

(d) If any change under this clause causes an increase or decrease in the Contractor's cost of, or the time required for, the performance of any part of the work under this contract, whether or not changed by any such order, the Contracting Officer shall make an equitable adjustment and modify the contract in writing. However, except for an adjustment based on defective specifications, no adjustment for any change under paragraph (b) of this clause shall be made for any costs incurred more than 20 days

before the Contractor gives written notice as required. In the case of defective specifications for which the Government is responsible, the equitable adjustment shall include any increased cost reasonably incurred by the Contractor in attempting to comply with the defective specifications.

(e) The Contractor must assert its right to an adjustment under this clause within 30 days after

(1) receipt of a written change order under paragraph (a) of this clause or (2) the furnishing of a written notice under paragraph (b) of this clause, by submitting to the Contracting Officer a written statement describing the general nature and amount of the proposal, unless this period is extended by the Government. The statement of proposal for adjustment may be included in the notice under paragraph (b) above.

(f) No proposal by the Contractor for an equitable adjustment shall be allowed if asserted after final payment under this contract.

(End of clause)

52.245-2 GOVERNMENT PROPERTY (FIXED-PRICE CONTRACTS) (DEC 1989)

(a) Government-furnished property. (1) The Government shall deliver to the Contractor, for use in connection with and under the terms of this contract, the Government-furnished property described in the Schedule or specifications together with any related data and information that the Contractor may request and is reasonably required for the intended use of the property (hereinafter referred to as "Government-furnished property").

(2) The delivery or performance dates for this contract are based upon the expectation that Government-furnished property suitable for use (except for property furnished "as is") will be delivered to the Contractor at the times stated in the Schedule or, if not so stated, in sufficient time to enable the Contractor to meet the contract's delivery or performance dates.

(3) If Government-furnished property is received by the Contractor in a condition not suitable for the intended use, the Contractor shall, upon receipt of it, notify the Contracting Officer, detailing the facts, and, as directed by the Contracting Officer and at Government expense, either repair, modify, return, or otherwise dispose of the property. After completing the directed action and upon written request of the Contractor, the Contracting Officer shall make an equitable adjustment as provided in paragraph (h) of this clause.

(4) If Government-furnished property is not delivered to the Contractor by the required time, the Contracting Officer shall, upon the Contractor's timely written request, make a

determination of the delay, if any, caused the Contractor and shall make an equitable adjustment in accordance with paragraph (h) of this clause.

(b) Changes in Government-furnished property. (1) The Contracting Officer may, by written notice, (i) decrease the Government-furnished property provided or to be provided under this contract, or (ii) substitute other Government-furnished property for the property to be provided by the Government, or to be acquired by the Contractor for the Government, under this contract. The Contractor shall promptly take such action as the Contracting Officer may direct regarding the removal, shipment, or disposal of the property covered by such notice.

(2) Upon the Contractor's written request, the Contracting Officer shall make an equitable adjustment to the contract in accordance with paragraph (h) of this clause, if the Government has agreed in the Schedule to make the property available for performing this contract and there is any--

(i) Decrease or substitution in this property pursuant to subparagraph (b)(1) of this clause; or

(ii) Withdrawal of authority to use this property, if provided under any other contract or lease.

(c) Title in Government property. (1) The Government shall retain title to all Government-furnished property.

(2) All Government-furnished property and all property acquired by the Contractor, title to which vests in the Government under this paragraph (collectively referred to as "Government property"), are subject to the provisions of this clause. However, special tooling accountable to this contract is subject to the provisions of the Special Tooling clause and is not subject to the provisions of this clause. Title to Government property shall not be affected by its incorporation into or attachment to any property not owned by the Government, nor shall Government property become a fixture or lose its identity as personal property by being attached to any real property.

(3) Title to each item of facilities and special test equipment acquired by the Contractor for the Government under this contract shall pass to and vest in the Government when its use in performing this contract commences or when the Government has paid for it, whichever is earlier, whether or not title previously vested in the Government.

(4) If this contract contains a provision directing the Contractor to purchase material for which the Government will reimburse the Contractor as a direct item of cost under this contract--

(i) Title to material purchased from a vendor shall pass to and vest in the Government upon the vendor's delivery of such material; and

(ii) Title to all other material shall pass to and vest in the Government upon--

(A) Issuance of the material for use in contract performance;

(B) Commencement of processing of the material or its use in contract performance; or

(C) Reimbursement of the cost of the material by the Government, whichever occurs first.

(d) Use of Government property. The Government property shall be used only for performing this contract, unless otherwise provided in this contract or approved by the Contracting Officer.

(e) Property administration. (1) The Contractor shall be responsible and accountable for all Government property provided under this contract and shall comply with Federal Acquisition Regulation (FAR) Subpart 45.5, as in effect on the date of this contract.

(2) The Contractor shall establish and maintain a program for the use, maintenance, repair, protection, and preservation of Government property in accordance with sound industrial practice and the applicable provisions of Subpart 45.5 of the FAR.

(3) If damage occurs to Government property, the risk of which has been assumed by the Government under this contract, the Government shall replace the items or the Contractor shall make such repairs as the Government directs. However, if the Contractor cannot effect such repairs within the time required, the Contractor shall dispose of the property as directed by the Contracting Officer. When any property for which the Government is responsible is replaced or repaired, the Contracting Officer shall make an equitable adjustment in accordance with paragraph (h) of this clause.

(4) The Contractor represents that the contract price does not include any amount for repairs or replacement for which the Government is responsible. Repair or replacement of property for which the Contractor is responsible shall be accomplished by the Contractor at its own expense.

(f) Access. The Government and all its designees shall have access at all reasonable times to the premises in which any Government property is located for the purpose of inspecting the Government property.

(g) Risk of loss. Unless otherwise provided in this contract, the Contractor assumes the risk of, and shall be responsible for, any loss or destruction of, or damage to, Government property upon its delivery to the Contractor or upon passage of title to the Government under paragraph (c) of this clause. However, the Contractor is not responsible for reasonable wear and tear to Government property or for Government property properly consumed in performing this contract.

(h) Equitable adjustment. When this clause specifies an equitable adjustment, it shall be made to any affected contract provision in accordance with the procedures of the Changes clause. When appropriate, the Contracting Officer may initiate an equitable adjustment in favor of the Government. The right to an equitable adjustment shall be the Contractor's exclusive remedy. The Government shall not be liable to suit for breach of contract for--
(1) Any delay in delivery of Government-furnished property;

(2) Delivery of Government-furnished property in a condition not suitable for its intended use;

(3) A decrease in or substitution of Government-furnished property; or

(4) Failure to repair or replace Government property for which the Government is responsible.

(i) Final accounting and disposition of Government property. Upon completing this contract, or at such earlier dates as may be fixed by the Contracting Officer, the Contractor shall submit, in a form acceptable to the Contracting Officer, inventory schedules covering all items of Government property (including any resulting scrap) not consumed in performing this contract or delivered to the Government. The Contractor shall prepare for shipment, deliver f.o.b. origin, or dispose of the Government property as may be directed or authorized by the Contracting Officer. The net proceeds of any such disposal shall be credited to the contract price or shall be paid to the Government as the Contracting Officer directs.

(j) Abandonment and restoration of Contractor's premises. Unless otherwise provided herein, the Government--

(1) May abandon any Government property in place, at which time all obligations of the Government regarding such abandoned property shall cease; and

(2) Has no obligation to restore or rehabilitate the Contractor's premises under any circumstances (e.g., abandonment, disposition upon completion of need, or upon contract completion). However, if the Government-furnished property (listed in the Schedule or specifications) is withdrawn or is unsuitable for the intended use, or if other Government property is substituted, then the equitable adjustment under paragraph (h) of this clause may properly include restoration or rehabilitation costs.

(k) Communications. All communications under this clause shall be in writing.
(l) Overseas contracts. If this contract is to be performed outside of the United States of America, its territories, or possessions, the words "Government" and "Government-furnished" (wherever they appear in this clause) shall be construed as "United States Government" and "United States Government-furnished," respectively.

(End of clause)

52.248-3 VALUE ENGINEERING--CONSTRUCTION (FEB 2000) - ALTERNATE I (APR 1984)

(a) General. The Contractor is encouraged to develop, prepare, and submit value engineering change proposals (VECP's) voluntarily. The Contractor shall share in any instant contract savings realized from accepted VECP's, in accordance with paragraph (f) below.

(b) Definitions. "Collateral costs," as used in this clause, means agency costs of operation, maintenance, logistic support, or Government-furnished property.

"Collateral savings," as used in this clause, means those measurable net reductions resulting from a VECP in the agency's overall projected collateral costs, exclusive of acquisition savings, whether or not the acquisition cost changes.

"Contractor's development and implementation costs," as used in this clause, means those costs the Contractor incurs on a VECP specifically in developing, testing, preparing, and submitting the VECP, as well as those costs the Contractor incurs to make the contractual changes required by Government acceptance of a VECP.

"Government costs," as used in this clause, means those agency costs that result directly from developing and implementing the VECP, such as any net increases in the cost of testing, operations, maintenance, and logistic support. The term does not include the normal administrative costs of processing the VECP.

"Instant contract savings," as used in this clause, means the estimated reduction in Contractor cost of performance resulting from acceptance of the VECP, minus allowable Contractor's development and implementation costs, including subcontractors' development and implementation costs (see paragraph (h) below).

"Value engineering change proposal (VECP)" means a proposal that--

(1) Requires a change to this, the instant contract, to implement; and

(2) Results in reducing the contract price or estimated cost without impairing essential functions or characteristics; provided, that it does not involve a change--

(i) In deliverable end item quantities only; or

(ii) To the contract type only.

(c) VECP preparation. As a minimum, the Contractor shall include in each VECP the information described in subparagraphs (1) through (7) below. If the proposed change is affected by contractually required configuration management or similar procedures, the

instructions in those procedures relating to format, identification, and priority assignment shall govern VECP preparation. The VECP shall include the following:

(1) A description of the difference between the existing contract requirement and that proposed, the comparative advantages and disadvantages of each, a justification when an item's function or characteristics are being altered, and the effect of the change on the end item's performance.

(2) A list and analysis of the contract requirements that must be changed if the VECP is accepted, including any suggested specification revisions.

(3) A separate, detailed cost estimate for (i) the affected portions of the existing contract requirement and (ii) the VECP. The cost reduction associated with the VECP shall take into account the Contractor's allowable development and implementation costs, including any amount attributable to subcontracts under paragraph (h) below.

(4) A description and estimate of costs the Government may incur in implementing the VECP, such as test and evaluation and operating and support costs.

(5) A prediction of any effects the proposed change would have on collateral costs to the agency.

(6) A statement of the time by which a contract modification accepting the VECP must be issued in order to achieve the maximum cost reduction, noting any effect on the contract completion time or delivery schedule.

(7) Identification of any previous submissions of the VECP, including the dates submitted, the agencies and contract numbers involved, and previous Government actions, if known.

(d) Submission. The Contractor shall submit VECP's to the Resident Engineer at the worksite, with a copy to the Contracting Officer.

(e) Government action. (1) The Contracting Officer shall notify the Contractor of the status of the VECP within 45 calendar days after the contracting office receives it. If additional time is required, the Contracting Officer shall notify the Contractor within the 45-day period and provide the reason for the delay and the expected date of the decision. The Government will process VECP's expeditiously; however, it shall not be liable for any delay in acting upon a VECP.

(2) If the VECP is not accepted, the Contracting Officer shall notify the Contractor in writing, explaining the reasons for rejection. The Contractor may withdraw any VECP, in whole or in part, at any time before it is accepted by the Government. The Contracting Officer may require that the Contractor provide written notification before undertaking significant expenditures for VECP effort.

(3) Any VECP may be accepted, in whole or in part, by the Contracting Officer's award of a modification to this contract citing this clause. The Contracting Officer may accept the VECP, even though an agreement on price reduction has not been reached, by issuing the Contractor a notice to proceed with the change. Until a notice to proceed is issued or a contract modification applies a VECP to this contract, the Contractor shall perform in accordance with the existing contract. The decision to accept or reject all or part of any VECP is a unilateral decision made solely at the discretion of the Contracting Officer.

(f) Sharing.

(1) Rates. The Government's share of savings is determined by subtracting Government costs from instant contract savings and multiplying the result by (i) 45 percent for fixed-price contracts or (ii) 75 percent for cost-reimbursement contracts.

(2) Payment. Payment of any share due the Contractor for use of a VECP on this contract shall be authorized by a modification to this contract to--

(i) Accept the VECP;

(ii) Reduce the contract price or estimated cost by the amount of instant contract savings; and

(iii) Provide the Contractor's share of savings by adding the amount calculated to the contract price or fee.

(g) Subcontracts. The Contractor shall include an appropriate value engineering clause in any subcontract of $50,000 or more and may include one in subcontracts of lesser value. In computing any adjustment in this contract's price under paragraph (f) above, the Contractor's allowable development and implementation costs shall include any subcontractor's allowable development and implementation costs clearly resulting from a VECP accepted by the Government under this contract, but shall exclude any value engineering incentive payments to a subcontractor. The Contractor may choose any arrangement for subcontractor value engineering incentive payments; provided, that these payments shall not reduce the Government's share of the savings resulting from the VECP.

(h) Data. The Contractor may restrict the Government's right to use any part of a VECP or the supporting data by marking the following legend on the affected parts:

"These data, furnished under the Value Engineering--Construction clause of contract . . . . . , shall not be disclosed outside the Government or duplicated, used, or disclosed, in whole or in part, for any purpose other than to evaluate a value engineering change proposal submitted under the clause. This restriction does not limit the Government's right to use information contained in these data if it has been obtained or is otherwise available from the Contractor or from another source without limitations."

If a VECP is accepted, the Contractor hereby grants the Government unlimited rights in the VECP and supporting data, except that, with respect to data qualifying and submitted as limited rights technical data, the Government shall have the rights specified in the contract modification implementing the VECP and shall appropriately mark the data. (The terms "unlimited rights" and "limited rights" are defined in Part 27 of the Federal Acquisition Regulation.)

(j) Collateral savings. If a VECP is accepted, the Contracting Officer will increase the instant contract amount by 20 percent of any projected collateral savings determined to be realized in a typical year of use after subtracting any Government costs not previously offset. However, the Contractor's share of collateral savings will not exceed the contract's firm-fixed-price or estimated cost, at the time the VECP is accepted, or $100,000, whichever is greater. The Contracting Officer will be the sole determiner of the amount of collateral savings.

(End of clause)

52.249-2 TERMINATION FOR CONVENIENCE OF THE GOVERNMENT (FIXED-PRICE) (SEP 1996) - ALTERNATE I (SEP 1996)

(a) The Government may terminate performance of work under this contract in whole or, from time to time, in part if the Contracting Officer determines that a termination is in the Government's interest. The Contracting Officer shall terminate by delivering to the Contractor a Notice of Termination specifying the extent of termination and the effective date.

(b) After receipt of a Notice of Termination, and except as directed by the Contracting Officer, the Contractor shall immediately proceed with the following obligations, regardless of any delay in determining or adjusting any amounts due under this clause:

(1) Stop work as specified in the notice.

(2) Place no further subcontracts or orders (referred to as subcontracts in this clause) for materials, services, or facilities, except as necessary to complete the continued portion of the contract.

(3) Terminate all subcontracts to the extent they relate to the work terminated.

(4) Assign to the Government, as directed by the Contracting Officer, all right, title, and interest of the Contractor under the subcontracts terminated, in which case the Government shall have the right to settle or to pay any termination settlement proposal arising out of those terminations.

(5) With approval or ratification to the extent required by the Contracting Officer, settle all outstanding liabilities and termination settlement proposals arising from the termination of subcontracts; the approval or ratification will be final for purposes of this clause.

(6) As directed by the Contracting Officer, transfer title and deliver to the Government (i) the fabricated or unfabricated parts, work in process, completed work, supplies, and other material produced or acquired for the work terminated, and (ii) the completed or partially completed plans, drawings, information, and other property that, if the contract had been completed, would be required to be furnished to the Government.

(7) Complete performance of the work not terminated.

(8) Take any action that may be necessary, or that the Contracting Officer may direct, for the protection and preservation of the property related to this contract that is in the possession of the Contractor and in which the Government has or may acquire an interest.

(9) Use its best efforts to sell, as directed or authorized by the Contracting Officer, any property of the types referred to in subparagraph (b)(6) of this clause; provided, however, that the Contractor (i) is not required to extend credit to any purchaser and (ii) may acquire the property under the conditions prescribed by, and at prices approved by, the Contracting Officer. The proceeds of any transfer or disposition will be applied to reduce any payments to be made by the Government under this contract, credited to the price or cost of the work, or paid in any other manner directed by the Contracting Officer.

(c) The Contractor shall submit complete termination inventory schedules no later than 120 days from the effective date of termination, unless extended in writing by the Contracting Officer upon written request of the Contractor within this 120-day period.

(d) After expiration of the plant clearance period as defined in Subpart 45.6 of the Federal Acquisition Regulation, the Contractor may submit to the Contracting Officer a list, certified as to quantity and quality, of termination inventory not previously disposed of, excluding items authorized for disposition by the Contracting Officer. The Contractor may request the Government to remove those items or enter into an agreement for their storage. Within 15 days, the Government will accept title to those items and remove them or enter into a storage agreement. The Contracting Officer may verify the list upon removal of the items, or if stored, within 45 days from submission of the list, and shall correct the list, as necessary, before final settlement.

(e) After termination, the Contractor shall submit a final termination settlement proposal to the Contracting Officer in the form and with the certification prescribed by the Contracting Officer. The Contractor shall submit the proposal promptly, but no later than 1 year from the effective date of termination, unless extended in writing by the Contracting Officer upon written request of the Contractor within this 1-year period. However, if the Contracting Officer determines that the facts justify it, a termination settlement proposal may be received and acted on after 1 year or any extension. If the

Contractor fails to submit the proposal within the time allowed, the Contracting Officer may determine, on the basis of information available, the amount, if any, due the Contractor because of the termination and shall pay the amount determined.

(f) Subject to paragraph (e) of this clause, the Contractor and the Contracting Officer may agree upon the whole or any part of the amount to be paid or remaining to be paid because of the termination. The amount may include a reasonable allowance for profit on work done. However, the agreed amount, whether under this paragraph (g) or paragraph (g) of this clause, exclusive of costs shown in subparagraph (g)(3) of this clause, may not exceed the total contract price as reduced by (1) the amount of payments previously made and (2) the contract price of work not terminated. The contract shall be modified, and the Contractor paid the agreed amount. Paragraph (g) of this clause shall not limit, restrict, or affect the amount that may be agreed upon to be paid under this paragraph.

(g) If the Contractor and Contracting Officer fail to agree on the whole amount to be paid the Contractor because of the termination of work, the Contracting Officer shall pay the Contractor the amounts determined as follows, but without duplication of any amounts agreed upon under paragraph (f) of this clause:

(1) For contract work performed before the effective date of termination, the total (without duplication of any items) of--

(i) The cost of this work;

(ii) The cost of settling and paying termination settlement proposals under terminated subcontracts that are properly chargeable to the terminated portion of the contract if not included in subdivision (g)(1)(i) of this clause; and

(iii) A sum, as profit on subdivision (g)(1)(i) of this clause, determined by the Contracting Officer under 49.202 of the Federal Acquisition Regulation, in effect on the date of this contract, to be fair and reasonable; however, if it appears that the Contractor would have sustained a loss on the entire contract had it been completed, the Contracting Officer shall allow no profit under this subdivision (iii) and shall reduce the settlement to reflect the indicated rate of loss.

(2) The reasonable costs of settlement of the work terminated, including--

(i) Accounting, legal, clerical, and other expenses reasonably necessary for the preparation of termination settlement proposals and supporting data;

(ii) The termination and settlement of subcontracts (excluding the amounts of such settlements); and

(iii) Storage, transportation, and other costs incurred, reasonably necessary for the preservation, protection, or disposition of the termination inventory.

(h) Except for normal spoilage, and except to the extent that the Government expressly assumed the risk of loss, the Contracting Officer shall exclude from the amounts payable to the Contractor under paragraph (g) of this clause, the fair value, as determined by the Contracting Officer, of property that is destroyed, lost, stolen, or damaged so as to become undeliverable to the Government or to a buyer.

(i) The cost principles and procedures of Part 31 of the Federal Acquisition Regulation, in effect on the date of this contract, shall govern all costs claimed, agreed to, or determined under this clause.

(j) The Contractor shall have the right of appeal, under the Disputes clause, from any determination made by the Contracting Officer under paragraph (e), (g), or (l) of this clause, except that if the Contractor failed to submit the termination settlement proposal or request for equitable adjustment within the time provided in paragraph (e) or (l), respectively, and failed to request a time extension, there is no right of appeal.

(k) In arriving at the amount due the Contractor under this clause, there shall be deducted--

(1) All unliquidated advance or other payments to the Contractor under the terminated portion of this contract;

(2) Any claim which the Government has against the Contractor under this contract; and

(3) The agreed price for, or the proceeds of sale of, materials, supplies, or other things acquired by the Contractor or sold under the provisions of this clause and not recovered by or credited to the Government.

(l) If the termination is partial, the Contractor may file a proposal with the Contracting Officer for an equitable adjustment of the price(s) of the continued portion of the contract. The Contracting Officer shall make any equitable adjustment agreed upon. Any proposal by the Contractor for an equitable adjustment under this clause shall be requested within 90 days from the effective date of termination unless extended in writing by the Contracting Officer.

(m)(1) The Government may, under the terms and conditions it prescribes, make partial payments and payments against costs incurred by the Contractor for the terminated portion of the contract, if the Contracting Officer believes the total of these payments will not exceed the amount to which the Contractor will be entitled.

(2) If the total payments exceed the amount finally determined to be due, the Contractor shall repay the excess to the Government upon demand, together with interest computed at the rate established by the Secretary of the Treasury under 50 U.S.C. App. 1215(b)(2). Interest shall be computed for the period from the date the excess payment is received by the Contractor to the date the excess is repaid. Interest shall not be charged on any excess payment due to a reduction in the Contractor's termination settlement proposal because of

retention or other disposition of termination inventory until 10 days after the date of the retention or disposition, or a later date determined by the Contracting Officer because of the circumstances.

(n) Unless otherwise provided in this contract or by statute, the Contractor shall maintain all records and documents relating to the terminated portion of this contract for 3 years after final settlement. This includes all books and other evidence bearing on the Contractor's costs and expenses under this contract. The Contractor shall make these records and documents available to the Government, at the Contractor's office, at all reasonable times, without any direct charge. If approved by the Contracting Officer, photographs, microphotographs, or other authentic reproductions may be maintained instead of original records and documents.

(End of clause)

52.249-10 DEFAULT (FIXED-PRICE CONSTRUCTION) (APR 1984)

(a) If the Contractor refuses or fails to prosecute the work or any separable part, with the diligence that will insure its completion within the time specified in this contract including any extension, or fails to complete the work within this time, the Government may, by written notice to the Contractor, terminate the right to proceed with the work (or the separable part of the work) that has been delayed. In this event, the Government may take over the work and complete it by contract or otherwise, and may take possession of and use any materials, appliances, and plant on the work site necessary for completing the work. The Contractor and its sureties shall be liable for any damage to the Government resulting from the Contractor's refusal or failure to complete the work within the specified time, whether or not the Contractor's right to proceed with the work is terminated. This liability includes any increased costs incurred by the Government in completing the work.

(b) The Contractor's right to proceed shall not be terminated nor the Contractor charged with damages under this clause, if--

(1) The delay in completing the work arises from unforeseeable causes beyond the control and without the fault or negligence of the Contractor. Examples of such causes include

(i) acts of God or of the public enemy,

(ii) acts of the Government in either its sovereign or contractual capacity,

(iii) acts of another Contractor in the performance of a contract with the Government,

(iv) fires,

(v) floods,

(vi) epidemics,

(vii) quarantine restrictions,

(viii) strikes,

(ix) freight embargoes,

(x) unusually severe weather, or delays of subcontractors or suppliers at any tier arising from unforeseeable causes beyond the control and without the fault or negligence of both the Contractor and the subcontractors or suppliers; and

(2) The Contractor, within 10 days from the beginning of any delay (unless extended by the Contracting Officer), notifies the Contracting Officer in writing of the causes of delay. The Contracting Officer shall ascertain the facts and the extent of delay. If, in the judgment of the Contracting Officer, the findings of fact warrant such action, the time for completing the work shall be extended. The findings of the Contracting Officer shall be final and conclusive on the parties, but subject to appeal under the Disputes clause.

(c) If, after termination of the Contractor's right to proceed, it is determined that the Contractor was not in default, or that the delay was excusable, the rights and obligations of the parties will be the same as if the termination had been issued for the convenience of the Government.

The rights and remedies of the Government in this clause are in addition to any other rights and remedies provided by law or under this contract.

(End of clause)

52.252-4 ALTERATIONS IN CONTRACT (APR 1984)

Portions of this contract are altered as follows:

(End of clause)

52.252-6 AUTHORIZED DEVIATIONS IN CLAUSES (APR 1984)

(a) The use in this solicitation or contract of any Federal Acquisition Regulation (48 CFR Chapter 1) clause with an authorized deviation is indicated by the addition of "(DEVIATION)" after the date of the clause.

(d) The use in this solicitation or contract of any _____ (48 CFR _____) clause with an authorized deviation is indicated by the addition of "(DEVIATION)" after the name of the regulation.

52.253-1 COMPUTER GENERATED FORMS (JAN 1991)

(a) Any data required to be submitted on a Standard or Optional Form prescribed by the Federal Acquisition Regulation (FAR) may be submitted on a computer generated version of the form, provided there is no change to the name, content, or sequence of the data elements on the form, and provided the form carries the Standard or Optional Form number and edition date.

(b) Unless prohibited by agency regulations, any data required to be submitted on an agency unique form prescribed by an agency supplement to the FAR may be submitted on a computer generated version of the form provided there is no change to the name, content, or sequence of the data elements on the form and provided the form carries the agency form number and edition date.

(e) If the Contractor submits a computer generated version of a form that is different than the required form, then the rights and obligations of the parties will be determined based on the content of the required form.

(End of clause)

252.201-7000 CONTRACTING OFFICER'S REPRESENTATIVE (DEC 1991)

(a) "Definition. Contracting officer's representative" means an individual designated in accordance with subsection 201.602-2 of the Defense Federal Acquisition Regulation Supplement and authorized in writing by the contracting officer to perform specific technical or administrative functions.

(b) If the Contracting Officer designates a contracting officer's representative (COR), the Contractor will receive a copy of the written designation. It will specify the extent of the COR's authority to act on behalf of the contracting officer. The COR is not authorized to make any commitments or changes that will affect price, quality, quantity, delivery, or any other term or condition of the contract.

(End of clause)

252.203-7001 PROHIBITION ON PERSONS CONVICTED OF FRAUD OR OTHER DEFENSE-CONTRACT-RELATED FELONIES (MAR 1999)

(a) Definitions. As used in this clause—

(1) "Arising out of a contract with the DoD" means any act in connection with—

(i) Attempting to obtain;

(ii) Obtaining, or

(iii) Performing a contract or first-tier subcontract of any agency, department, or component of the Department of Defense (DoD).

(2) "Conviction of fraud or any other felony" means any conviction for fraud or a felony in violation of state or Federal criminal statutes, whether entered on a verdict or plea, including a plea of *nolo contendere*, for which sentence has been imposed.

(3) "Date of conviction" means the date judgment was entered against the individual.

(b) Any individual who is convicted after September 29, 1988, of fraud or any other felony arising out of a contract with the DoD is prohibited from serving--

(1) In a management or supervisory capacity on any DoD contract or first-tier subcontract;

(2) On the board of directors of any DoD contractor or first-tier subcontractor;

(3) As a consultant, agent, or representative for any DoD contractor or first-tier subcontractor; or

(4) In any other capacity with the authority to influence, advise, or control the decisions of any DoD contractor or subcontractor with regard to any DoD contract or first-tier subcontract.

(c) Unless waived, the prohibition in paragraph (b) of this clause applies for not less than 5 years from the date of conviction.

(d) 10 U.S.C. 2408 provides that a defense contractor or first-tier subcontractor shall be subject to a criminal penalty of not more than $500,000 if convicted of knowingly—

(1) Employing a person under a prohibition specified in paragraph (b) of this clause; or

(2) Allowing such a person to serve on the board of directors of the contractor or first-tier subcontractor.

(e) In addition to the criminal penalties contained in 10 U.S.C. 2408, the Government may consider other available remedies, such as—

(1) Suspension or debarment;

(2) Cancellation of the contract at no cost to the Government; or

(3) Termination of the contract for default.

(f) The Contractor may submit written requests for waiver of the prohibition in paragraph (b) of this clause to the Contracting Officer. Requests shall clearly identify—

(1) The person involved;

(2) The nature of the conviction and resultant sentence or punishment imposed;

(3) The reasons for the requested waiver; and

(4) An explanation of why a waiver is in the interest of national security.

(g) The Contractor agrees to include the substance of this clause, appropriately modified to reflect the identity and relationship of the parties, in all first-tier subcontracts exceeding the simplified acquisition threshold in Part 2 of the Federal Acquisition Regulation, except those for commercial items or components.

(h) Pursuant to 10 U.S.C. 2408(c), defense contractors and subcontractors may obtain information as to whether a particular person has been convicted of fraud or any other felony arising out of a contract with the DoD by contacting The Office of Justice Programs, The Denial of Federal Benefits Office, U.S. Department of Justice, telephone (202) 616-3507.

(End of clause)

252.203-7002 DISPLAY OF DOD HOTLINE POSTER (DEC 1991)

(a) The Contractor shall display prominently in common work areas within business segments performing work under Department of Defense (DoD) contracts, DoD Hotline Posters prepared by the DoD Office of the Inspector General.

(b) DoD Hotline Posters may be obtained from the DoD Inspector General, ATTN: Defense Hotline, 400 Army Navy Drive, Washington, DC 22202-2884.

(f) The Contractor need not comply with paragraph (a) of this clause if it has established a mechanism, such as a hotline, by which employees may report suspected instances of improper conduct, and instructions that encourage employees to make such reports.

(End of clause)

252.204-7000 DISCLOSURE OF INFORMATION (DEC 1991)

(a) The Contractor shall not release to anyone outside the Contractor's organization any unclassified information, regardless of medium (e.g., film, tape, document), pertaining to any part of this contract or any program related to this contract, unless--

(1) The Contracting Officer has given prior written approval; or

(2) The information is otherwise in the public domain before the date of release.

(b) Requests for approval shall identify the specific information to be released, the medium to be used, and the purpose for the release. The Contractor shall submit its request to the Contracting Officer at least 45 days before the proposed date for release.

(c) The Contractor agrees to include a similar requirement in each subcontract under this contract. Subcontractors shall submit requests for authorization to release through the prime contractor to the Contracting Officer.

(End of clause)

252.204-7003 CONTROL OF GOVERNMENT PERSONNEL WORK PRODUCT (APR 1992)

The Contractor's procedures for protecting against unauthorized disclosure of information shall not require Department of Defense employees or members of the Armed Forces to relinquish control of their work products, whether classified or not, to the contractor.

(End of clause)

252.205-7000 PROVISION OF INFORMATION TO COOPERATIVE AGREEMENT HOLDERS (DEC 1991)

(a) Definition.

"Cooperative agreement holder" means a State or local government; a private, nonprofit organization; a tribal organization (as defined in section 4(c) of the Indian Self-Determination and Education Assistance Act (Pub. L. 93-268; 25 U.S.C. 450 (c))); or an economic enterprise (as defined in section 3(e) of the Indian Financing Act of 1974 (Pub. L. 93-362; 25 U.S.C. 1452(e))) whether such economic enterprise is organized for profit

or nonprofit purposes; which has an agreement with the Defense Logistics Agency to furnish procurement technical assistance to business entities.

(b) The Contractor shall provide cooperative agreement holders, upon their request, with a list of those appropriate employees or offices responsible for entering into subcontracts under defense contracts. The list shall include the business address, telephone number, and area of responsibility of each employee or office.

(c) The Contractor need not provide the listing to a particular cooperative agreement holder more frequently than once a year.

(End of clause)

252.209-7000 ACQUISITION FROM SUBCONTRACTORS SUBJECT TO ONSITE INSPECTION UNDER THE INTERMEDIATE-RANGE NUCLEAR FORCES (INF) TREATY (NOV 1995)

(a) The Contractor shall not deny consideration for a subcontract award under this contract to a potential subcontractor subject to on-site inspection under the INF Treaty, or a similar treaty, solely or in part because of the actual or potential presence of Soviet inspectors at the subcontractor's facility, unless the decision is approved by the Contracting Officer.

(b) The Contractor shall incorporate this clause, including this paragraph (b), in all solicitations and contracts exceeding the simplified acquisition threshold in part 13 of the Federal Acquisition Regulation, except those for commercial items.

(End of clause)

252.219-7009 SECTION 8(A) DIRECT AWARD (MAR 2002)

(a) This contract is issued as a direct award between the contracting office and the 8(a) Contractor pursuant to the Partnership Agreement dated February 1, 2002, between the Small Business Administration (SBA) and the Department of Defense. Accordingly, the SBA, even if not identified in Section A of this contract, is the prime contractor and retains responsibility for 8(a) certification, for 8(a) eligibility determinations and related issues, and for providing counseling and assistance to the 8(a) Contractor under the 8(a) Program. The cognizant SBA district office is:

Arizona District

(b) The contracting office is responsible for administering the contract and for taking any action on behalf of the Government under the terms and conditions of the contract; provided that the contracting office shall give advance notice to the SBA before it issues a final notice terminating performance, either in whole or in part, under the contract. The contracting office also shall coordinate with the SBA prior to processing any novation agreement. The contracting office may assign contract administration functions to a contract administration office.

(c) The Contractor agrees that--

(1) It will notify the Contracting Officer, simultaneous with its notification to the SBA (as required by SBA's 8(a) regulations at 13 CFR 124.308), when the owner or owners upon whom 8(a) eligibility is based plan to relinquish ownership or control of the concern. Consistent with Section 407 of Pub. L. 100-656, transfer of ownership or control shall result in termination of the contract for convenience, unless the SBA waives the requirement for termination prior to the actual relinquishing of ownership and control; and

(2) It will not subcontract the performance of any of the requirements of this contract without the prior written approval of the SBA and the Contracting Officer.

(End of Clause)

252.219-7010 ALTERNATE A (JUN 1998)

(a) Offers are solicited only from small business concerns expressly certified by the Small Business Administration (SBA) for participation in the SBA's 8(a) Program and which meet the following criteria at the time of submission of offer--

(1) The Offeror is in conformance with the 8(a) limitation set forth in its approved business plan; and

(2) The Offeror is in conformance with the Business Activity Targets set forth in its approved business plan or any remedial action directed by the SBA.

(b) By submission of its offer, the Offeror represents that it meets all of the criteria set forth in paragraph (a) of this clause.

(c) Any award resulting from this solicitation will be made directly by the Contracting Officer to the successful 8(a) offeror selected through the evaluation criteria set forth in this solicitation.

(d)(1) Agreement. A small business concern submitting an offer in its own name agrees to furnish, in performing the contract, only end items manufactured or produced by small

business concerns in the United States. The term "United States" includes its territories and possessions, the Commonwealth of Puerto Rico, the trust territory of the Pacific Islands, and the District of Columbia. If this procurement is processed under simplified acquisition procedures and the total amount of this contract does not exceed $25,000, a small business concern may furnish the product of any domestic firm. This subparagraph does not apply in connection with construction or service contracts.

(2) The [insert name of SBA's contractor] will notify the L.A. District Corps of Engineer Contracting Officer in writing immediately upon entering an agreement (either oral or written) to transfer all or part of its stock or other ownership interest to any other party.

(End of clause)

252.223-7004 DRUG-FREE WORK FORCE (SEP 1988)

(a) Definitions.

(1) "Employee in a sensitive position," as used in this clause, means an employee who has been granted access to classified information; or employees in other positions that the Contractor determines involve national security; health or safety, or functions other than the foregoing requiring a high degree of trust and confidence.

(2) "Illegal drugs," as used in this clause, means controlled substances included in Schedules I and II, as defined by section 802(6) of title 21 of the United States Code, the possession of which is unlawful under chapter 13 of that Title. The term "illegal drugs" does not mean the use of a controlled substance pursuant to a valid prescription or other uses authorized by law.

(b) The Contractor agrees to institute and maintain a program for achieving the objective of a drug-free work force. While this clause defines criteria for such a program, contractors are encouraged to implement alternative approaches comparable to the criteria in paragraph (c) that are designed to achieve the objectives of this clause.

(c) Contractor programs shall include the following, or appropriate alternatives:

(1) Employee assistance programs emphasizing high level direction, education, counseling, rehabilitation, and coordination with available community resources;

(2) Supervisory training to assist in identifying and addressing illegal drug use by Contractor employees;

(3) Provision for self-referrals as well as supervisory referrals to treatment with maximum respect for individual confidentiality consistent with safety and security issues;

(4) Provision for identifying illegal drug users, including testing on a controlled and carefully monitored basis. Employee drug testing programs shall be established taking account of the following:

(i) The Contractor shall establish a program that provides for testing for the use of illegal drugs by employees in sensitive positions. The extent of and criteria for such testing shall be determined by the Contractor based on considerations that include the nature of the work being performed under the contract, the employee's duties, and efficient use of Contractor resources, and the risks to health, safety, or national security that could result from the failure of an employee adequately to discharge his or her position.

(ii) In addition, the Contractor may establish a program for employee drug testing--

(A) When there is a reasonable suspicion that an employee uses illegal drugs; or

(B) When an employees has been involved in an accident or unsafe practice;

(C) As part of or as a follow-up to counseling or rehabilitation for illegal drug use;

(D) As part of a voluntary employee drug testing program.

(iii) The Contractor may establish a program to test applicants for employment for illegal drug use.

(iv) For the purpose of administering this clause, testing for illegal drugs may be limited to those substances for which testing is prescribed by section 2..1 of subpart B of the "Mandatory Guidelines for Federal Workplace Drug Testing Programs" (53 FR 11980 (April 11, 1988), issued by the Department of Health and Human Services.

(d) Contractors shall adopt appropriate personnel procedures to deal with employees who are found to be using drugs illegally. Contractors shall not allow any employee to remain on duty or perform in a sensitive position who is found to use illegal drugs until such times as the Contractor, in accordance with procedures established by the Contractor, determines that the employee may perform in such a position.

(e) The provisions of this clause pertaining to drug testing program shall not apply to the extent that are inconsistent with state or local law, or with an existing collective bargaining agreement; provided that with respect to the latter, the Contractor agrees those issues that are in conflict will be a subject of negotiation at the next collective bargaining session.

(End of clause)

252.225-7012 Preference for Certain Domestic Commodities (APR 2002)

(a) Definitions. As used in this clause--

(1) Component means any item supplied to the Government as part of an end product or of another component.

(2) End product means supplies delivered under a line item of this contract.

(b) The Contractor shall deliver under this contract only such of the following items, either as end products or components, that have been grown, reprocessed, reused, or produced in the United States, its possessions, or Puerto Rico:

(1) Food.

(2) Clothing.

(3) Tents, tarpaulins, or covers.

(4) Cotton and other natural fiber products.

(5) Woven silk or woven silk blends.

(6) Spun silk yarn for cartridge cloth.

(7) Synthetic fabric, and coated synthetic fabric, including all textile fibers and yarns that are for use in such fabrics.

(8) Canvas products.

(9) Wool (whether in the form of fiber or yarn or contained in fabrics, materials, or manufactured articles).

(10) Any item of individual equipment (Federal Supply Class 8465) manufactured from or containing fibers, yarns, fabrics, or materials listed in this paragraph (b).

(c) This clause does not apply--

(1) To items listed in section 25.104(a) of the Federal Acquisition Regulation (FAR), or other items for which the Government has determined that a satisfactory quality and sufficient quantity cannot be acquired as and when needed at U.S. market prices;

(2) To end products incidentally incorporating cotton, other natural fibers, or wool, for which the estimated value of the cotton, other natural fibers, or wool--

(i) Is not more than 10 percent of the total price of the end product; and (ii) Does not exceed the simplified acquisition threshold in FAR part 2;

(3) To foods that have been manufactured or processed in the United States, its possessions, or Puerto Rico, regardless of where the foods (and any component if applicable) were grown or produced;

(4) To chemical warfare protective clothing produced in the countries listed in subsection 225.872-1 of the Defense FAR Supplement; or

(5) To fibers and yarns that are for use in synthetic fabric or coated synthetic fabric (but does apply to the synthetic or coated synthetic fabric itself), if--

(i) The fabric is to be used as a component of an end product that is not a textile product. Examples of textile products, made in whole or in part of fabric, include--

(A) Draperies, floor coverings, furnishings, and bedding (Federal Supply Group 72, Household and Commercial Furnishings and Appliances);

(B) Items made in whole or in part of fabric in Federal Supply Group 83, Textile/leather/furs/apparel/findings/ tents/flags, or Federal Supply Group 84, Clothing, Individual Equipment and Insignia;

(C) Upholstered seats (whether for household, office, or other use); and

(D) Parachutes (Federal Supply Class 1670); or

(ii) The fibers and yarns are para-aramid fibers and yarns manufactured in the Netherlands.

(End of clause)

252.225-7016 RESTRICTION ON ACQUISITION OF BALL AND ROLLER BEARINGS (AUG 1998)

(a) Definitions.

As used in this clause--

(1) “Bearing components” means the bearing element, retainer, inner race, or outer race.

(2) “Miniature and instrument ball bearings” means all rolling contact ball bearings with a basic outside diameter (exclusive of flange diameters) of 30 millimeters or less, regardless of material, tolerance, performance, or quality characteristics.

(b) The Contractor agrees that, except as provided in paragraph (c) of this clause, all ball and roller bearings and ball and roller bearing components (including miniature and instrument ball bearings) delivered under this contract, either as end items or components of end items, shall be wholly manufactured in the United States or Canada. Unless otherwise specified, raw materials, such as performed bar, tube, or rod stock and lubricants, need not be mined or produced in the United States or Canada.

(c) (1) The restriction in paragraph (b) of this clause does not apply to the extent that—

(i) The end items or components containing ball or roller bearings are commercial items; or

(ii) The ball or roller bearings are commercial items manufactured in the United Kingdom.

(2) The commercial item exception in paragraph (c)(1) of this clause does not include items designed or developed under a Government contract or contracts where the end item is bearings and bearing components.

(d) The restriction in paragraph (b) of this clause may be waived upon request from the Contractor in accordance with subsection 225.7019-3 of the Defense Federal Acquisition Regulation Supplement. If the restriction is waived for miniature and instrument ball bearings, the Contractor agrees to acquire a like quantity and type of domestic manufacture for nongovernmental use.

(e) The Contractor agrees to retain records showing compliance with this restriction until 3 years after final payment and to make records available upon request of the Contracting Office.

(f) The Contractor agrees to insert this clause, including this paragraph (f), in every subcontract and purchase order issued in performance of this contract, unless items acquired are--

(1) Commercial items other than ball or roller bearings; or

(2) Items that do not contain ball or roller bearings.

(End of clause)

252.225-7026 REPORTING OF CONTRACT PERFORMANCE OUTSIDE THE UNITED STATES (JUN 2000)

(a) Reporting criteria.

Reporting under this clause is required for--

(1) Offers exceeding $10 million, if the Offeror is aware at the time the offer is submitted that it or its first-tier subcontractor intends to perform any part of the contract that exceeds $500,000 outside the United States and Canada, if that part could be performed inside the United States or Canada;

(2) Contracts exceeding $10 million, when any part that exceeds $500,000 could be performed inside the United States or Canada, but will be performed outside the United States and Canada. If the information was submitted with the offer, it need not be resubmitted unless it changes; and

(3) Contracts exceeding $500,000, when any part that exceeds the simplified acquisition threshold in Part 2 of the Federal Acquisition Regulation will be performed outside the United States, unless a foreign place of performance is--

(i) The principal place of performance; and

(ii) Indicated by the Offeror's entry in the Place of Performance provision of the solicitation.

(b) Submission of reports.

(1) The Offeror shall submit reports required by paragraph (a)(1) of this clause with its offer.

(2) The Contractor shall submit reports required by paragraph (a)(2) of this clause to the Contracting Officer as soon as the information is known, with a copy to the addressee in paragraph (b)(3) of this clause. With respect to performance by a first-tier subcontractor, this information shall be reported, to the maximum extent practicable, at least 30 days before award of the subcontract.

(3) The Contractor shall submit reports required by paragraph (a)(3) of this clause within 10 days of the end of each Government quarter to—Deputy Director of Defense Procurement (Foreign Contracting) OUSD(AT&L)DP(FC) Washington, DC 20301-3060

(4) The Offeror/Contractor shall submit reports on DD Form 2139, Report of Contract Performance Outside the United States. Computer-generated reports are acceptable, provided the report contains all information required by DD Form 2139. Copies of DD Form 2139 may be obtained from the Contracting Officer.

(c) Flowdown requirements. (1) The Contractor shall include a clause substantially the same as this one in all first-tier subcontracts exceeding $500,000, except subcontracts for commercial items, construction, ores, natural gases, utilities, petroleum products and crudes, timber (logs), or subsistence.

(g) The Contractor shall provide the prime contract number to subcontractors for reporting purposes.

(d) Information required.

(1) Information to be reported on the part of this contract performed outside the United States (or outside the United States and Canada for reports required by paragraphs (a)(1) and (a)(2) of this clause) includes that for--

(i) Subcontracts;

(ii) Purchases; and

(iii) Intracompany transfers when transfers originate in a foreign location.

(End of clause)

252.225-7031 SECONDARY ARAB BOYCOTT OF ISRAEL (JUN 1992)

(a) Definitions. As used in this clause--

(1) "Foreign person" means any person other than a United States person as defined in Section 16(2) of the Export Administration Act of 1979 (50 U.S.C. App. Sec 2415).

(2) "United States person" is defined in Section 16(2) of the Export Administration Act of 1979 and means any United States resident or national (other than an individual resident outside the United States and employed by other than a United States person), any domestic concern (including any permanent domestic establishment of any foreign concern), and any foreign subsidiary or affiliate (including any permanent foreign establishment) of any domestic concern which is controlled in fact by such domestic concerns, as determined under regulations of the President.

(b) Certification. By submitting this offer, the Offeror, if a foreign person, company or entity, certifies that it--

(1) Does not comply with the Secondary Arab Boycott of Israel; and

(2) Is not taking or knowingly agreeing to take any action, with respect to the Secondary Boycott of Israel by Arab countries, which 50 U.S.C. App. Sec 2407(a) prohibits a United States person from taking.

(End of clause)

252.227-7000 Non-estoppel. (OCT 1966)

The Government reserves the right at any time to contest the enforceability, validity, scope of, or the title to any patent or patent application herein licensed without waiving or forfeiting any right under this contract.

(End of clause)

252.227-7022 GOVERNMENT RIGHTS (UNLIMITED) (MAR 1979)

The Government shall have unlimited rights, in all drawings, designs, specifications, notes and other works developed in the performance of this contract, including the right to use same on any other Government design or construction without additional compensation to the Contractor. The Contractor hereby grants to the Government a paid-up license throughout the world to all such works to which he may assert or establish any claim under design patent or copyright laws. The Contractor for a period of three (3) years after completion of the project agrees to furnish the original or copies of all such works on the request of the Contracting Officer.

(End of clause)

252.227-7023 DRAWINGS AND OTHER DATA TO BECOME PROPERTY OF GOVERNMENT. (MAR 1979)

All designs, drawings, specifications, notes and other works developed in the performance of this contract shall become the sole property of the Government and may be used on any other design or construction without additional compensation to the Contractor. The Government shall be considered the "person for whom the work was prepared" for the purpose of authorship in any copyrightable work under 17 U.S.C. 201(b). With respect thereto, the Contractor agrees not to assert or authorize others to assert any rights nor establish any claim under the design patent or copyright laws. The Contractor for a period of three (3) years after completion of the project agrees to furnish all retained works on the request of the Contracting Officer. Unless otherwise provided in this contract, the Contractor shall have the right to retain copies of all works beyond such period.

(End of clause)

252.227-7033 RIGHTS IN SHOP DRAWINGS (APR 1966)

(a) Shop drawings for construction means drawings, submitted to the Government by the Construction Contractor, subcontractor or any lower-tier subcontractor pursuant to a construction contract, showing in detail (i) the proposed fabrication and assembly of structural elements and (ii) the installation (i.e., form, fit, and attachment details) of materials or equipment. The Government may duplicate, use, and disclose in any manner and for any purpose shop drawings delivered under this contract.

(b) This clause, including this paragraph (b), shall be included in all subcontracts hereunder at any tier.

252.231-7000 SUPPLEMENTAL COST PRINCIPLES (DEC 1991)

When the allowability of costs under this contract is determined in accordance with part 31 of the Federal Acquisition Regulation (FAR), allowability shall also be determined in accordance with part 231 of the Defense FAR Supplement, in effect on the date of this contract.

(End of clause)

252.236-7000 MODIFICATION PROPOSALS - PRICE BREAKDOWN. (DEC 1991)

(a) The Contractor shall furnish a price breakdown, itemized as required and within the time specified by the Contracting Officer, with any proposal for a contract modification.

(b) The price breakdown --

(1) Must include sufficient detail to permit an analysis of profit, and of all costs for --

(i) Material;

(ii) Labor;

(iii) Equipment;

(iv) Subcontracts; and

(v) Overhead; and

(2) Must cover all work involved in the modification, whether the work was deleted, added, or changed.

(c) The Contractor shall provide similar price breakdowns to support any amounts claimed for subcontracts.

(d) The Contractor's proposal shall include a justification for any time extension proposed.

252.236-7008 CONTRACT PRICES - BIDDING SCHEDULES. (DEC 1991)

(a) The Government's payment for the items listed in the Bidding Schedule shall constitute full compensation to the Contractor for --

(1) Furnishing all plant, labor, equipment, appliances, and materials; and

(2) Performing all operations required to complete the work in conformity with the drawings and specifications.

(b) The Contractor shall include in the prices for the items listed in the Bidding Schedule all costs for work in the specifications, whether or not specifically listed in the Bidding Schedule.

252.242-7000 POSTAWARD CONFERENCE (DEC 1991)

The Contractor agrees to attend any postaward conference convened by the contracting activity or contract administration office in accordance with Federal Acquisition Regulation subpart 42.5.

(End of clause)

252.243-7001 PRICING OF CONTRACT MODIFICATIONS (DEC 1991)

When costs are a factor in any price adjustment under this contract, the contract cost principles and procedures in FAR part 31 and DFARS part 231, in effect on the date of this contract, apply.

252.243-7002 REQUESTS FOR EQUITABLE ADJUSTMENT (MAR 1998)

(a) The amount of any request for equitable adjustment to contract terms shall accurately reflect the contract adjustment for which the Contractor believes the Government is liable. The request shall include only costs for performing the change, and shall not include any costs that already have been reimbursed or that have been separately claimed. All indirect costs included in the request shall be properly allocable to the change in accordance with applicable acquisition regulations.

(b) In accordance with 10 U.S.C. 2410(a), any request for equitable adjustment to contract terms that exceeds the simplified acquisition threshold shall bear, at the time of submission, the following certificate executed by an individual authorized to certify the request on behalf of the Contractor:

I certify that the request is made in good faith, and that the supporting data are accurate and complete to the best of my knowledge and belief.

(Official's Name)

(Title)

(c) The certification in paragraph (b) of this clause requires full disclosure of all relevant facts, including--

(1) Cost or pricing data if required in accordance with subsection 15.403-4 of the Federal Acquisition Regulation (FAR); and

(2) Information other than cost or pricing data, in accordance with subsection 15.403-3 of the FAR, including actual cost data and data to support any estimated costs, even if cost or pricing data are not required.

(d) The certification requirement in paragraph (b) of this clause does not apply to----

(1) Requests for routine contract payments; for example, requests for payment for accepted supplies and services, routine vouchers under a cost-reimbursement type contract, or progress payment invoices; or

(2) Final adjustment under an incentive provision of the contract.

252.247-7024 Notification of Transportation of Supplies by Sea (MAR 2000)

(a) The Contractor has indicated by the response to the solicitation provision, Representation of Extent of Transportation by Sea, that it did not anticipate transporting by sea any supplies. If, however, after the award of this contract, the Contractor learns that supplies, as defined in the Transportation of Supplies by Sea clause of this contract, will be transported by sea, the Contractor --

(1) Shall notify the Contracting Officer of that fact; and

(2) Hereby agrees to comply with all the terms and conditions of the Transportation of Supplies by Sea clause of this contract.

(b) The Contractor shall include this clause; including this paragraph (b), revised as necessary to reflect the relationship of the contracting parties--

(1) In all subcontracts under this contract, if this contract is a construction contract; or

(2) If this contract is not a construction contract, in all subcontracts under this contract that are for--

(i) Noncommercial items; or

(ii) Commercial items that--

(A) The Contractor is reselling or distributing to the Government without adding value (generally, the Contractor does not add value to items that it subcontracts for f.o.b. destination shipment);

(B) Are shipped in direct support of U.S. military contingency operations, exercises, or forces deployed in humanitarian or peacekeeping operations; or

(C) Are commissary or exchange cargoes transported outside of the Defense Transportation System in accordance with 10 U.S.C. 2643.

(End of clause)

This page was intentionally left blank for duplex printing.

SECTION 00800 – SPECIAL CONTRACT REQUIREMENTS

52.0001-4001 CONTRACT ADMINISTRATION DATA 2
52.211-10 COMMENCEMENT, PROSECUTION, AND COMPLETION OF WORK (APR 1984) 2
52.211-12 LIQUIDATED DAMAGES--CONSTRUCTION (SEP 2000) 3
52.211-18 VARIATION IN ESTIMATED QUANTITY (APR 1984) 3
52.214-34 SUBMISSION OF OFFERS IN THE ENGLISH LANGUAGE (APR 1991) 3
52.214-35 SUBMISSION OF OFFERS IN U.S. CURRENCY (APR 1991) 4
52.222-23 NOTICE OF REQUIREMENT FOR AFFIRMATIVE ACTION TO ENSURE EQUAL EMPLOYMENT OPPORTUNITY FOR CONSTRUCTION (FEB 1999) 4
52.226-1 UTILIZATION OF INDIAN ORGANIZATIONS AND INDIAN-OWNED ECONOMIC ENTERPRISES (JUN 2000) 5
52.228-12 Prospective Subcontractor Requests for Bonds. (OCT 1995) 7
52.228-14 IRREVOCABLE LETTER OF CREDIT (DEC 1999) 7
52.228-15 Performance and Payment Bonds--Construction (JUL 2000)- 11
EQUIPMENT OWNERSHIP AND OPERATING EXPENSE SCHEDULE (MAR 1995) EFARS 52-231-5000 13
52.232-33 PAYMENT BY ELECTRONIC FUNDS TRANSFER—CENTRAL CONTRACTOR REGISTRATION (MAY 1999) 13
52.232-4001 CONTINUING CONTRACTS (ALTERNATE) (MAR 1995) EFARS 52-232-5002 16
52.236-4 PHYSICAL DATA (APR 1984) 17
52.236-16 QUANTITY SURVEYS (APR 1984) - ALTERNATE I (APR 1984) 18
52.236-21 SPECIFICATIONS AND DRAWINGS FOR CONSTRUCTION (FEB 1997) 18
BASIS FOR SETTLEMENT OF PROPOSALS EFARS 52.249-5000 20
252.236-7001 CONTRACT DRAWINGS, MAPS, AND SPECIFICATIONS (AUG 2000) 20
252.247-7023 Transportation of Supplies by Sea (MAY 2002) 21
PIL 2003-06, 19 Feb 03 SECURITY CONTRACT LANGUAGE FOR ALL CORPS OF ENGINEERS' UNCLASSIFIED CONTRACTS 25

52.0001-4001 CONTRACT ADMINISTRATION DATA

The Contract Administration Office for this contract subsequent to award is:

Department of the Army
Los Angeles District, Corps of Engineers
P.O. Box 532711
Los Angeles, California 90053-2325

ATTN: Sandy Hall

Telephone No: (213) 452-3243

Payment will be made by:

USACE Finance Center
ATTN: CEFC-AO-P
5270 Integrity Drive
Millington, TN 38054-5005

Submit Invoices to:

Refer to Block No. 26 of Standard Form 1442, Solicitation, Offer and Award, which will be ocmpleted at time of contract award.

52.211-10 COMMENCEMENT, PROSECUTION, AND COMPLETION OF WORK (APR 1984)

The Contractor shall be required to (a) commence work under this contract within 10 calendar days after the date the Contractor receives the notice to proceed, (b) prosecute the work diligently, and (c) complete the entire work ready for use not later than 365 calendar days after Receipt of Notice of to Proceed. The time stated for completion shall include final cleanup of the premises.

(End of clause)

52.211-12 LIQUIDATED DAMAGES--CONSTRUCTION (SEP 2000)

(a) If the Contractor fails to complete the work within the time specified in the contract, the Contractor shall pay liquidated damages to the Government in the amount of $907.00 for each calendar day of delay until the work is completed or accepted.

(b) If the Government terminates the Contractor's right to proceed, liquidated damages will continue to accrue until the work is completed. These liquidated damages are in addition to excess costs of repurchase under the Termination clause.

(End of clause)

52.211-18 VARIATION IN ESTIMATED QUANTITY (APR 1984)

If the quantity of a unit-priced item in this contract is an estimated quantity and the actual quantity of the unit-priced item varies more than 15 percent above or below the estimated quantity, an equitable adjustment in the contract price shall be made upon demand of either party. The equitable adjustment shall be based upon any increase or decrease in costs due solely to the variation above 115 percent or below 85 percent of the estimated quantity. If the quantity variation is such as to cause an increase in the time necessary for completion, the Contractor may request, in writing, an extension of time, to be received by the Contracting Officer within 10 days from the beginning of the delay, or within such further period as may be granted by the Contracting Officer before the date of final settlement of the contract. Upon the receipt of a written request for an extension, the Contracting Officer shall ascertain the facts and make an adjustment for extending the completion date as, in the judgement of the Contracting Officer, is justified.

52.214-34 SUBMISSION OF OFFERS IN THE ENGLISH LANGUAGE (APR 1991)

Offers submitted in response to this solicitation shall be in the English language. Offers received in other than English shall be rejected.

(End of provision)

52.214-35 SUBMISSION OF OFFERS IN U.S. CURRENCY (APR 1991)

Offers submitted in response to this solicitation shall be in terms of U.S. dollars. Offers received in other than U.S. dollars shall be rejected.

(End of provision)

52.222-23 NOTICE OF REQUIREMENT FOR AFFIRMATIVE ACTION TO ENSURE EQUAL EMPLOYMENT OPPORTUNITY FOR CONSTRUCTION (FEB 1999)

(a) The offeror's attention is called to the Equal Opportunity clause and the Affirmative Action Compliance Requirements for Construction clause of this solicitation.

(b) The goals for minority and female participation, expressed in percentage terms for the Contractor's aggregate workforce in each trade on all construction work in the covered area, are as follows:

Goals for minority participation for each trade	Goals for female participation for each trade
25.0 to 30.0%	6.9%

These goals are applicable to all the Contractor's construction work performed in the covered area. If the Contractor performs construction work in a geographical area located outside of the covered area, the Contractor shall apply the goals established for the geographical area where the work is actually performed. Goals are published periodically in the Federal Register in notice form, and these notices may be obtained from any Office of Federal Contract Compliance Programs office.

(c) The Contractor's compliance with Executive Order 11246, as amended, and the regulations in 41 CFR 60-4 shall be based on (1) its implementation of the Equal Opportunity clause, (2) specific affirmative action obligations required by the clause entitled "Affirmative Action Compliance Requirements for Construction," and (3) its efforts to meet the goals. The hours of minority and female employment and training must be substantially uniform throughout the length of the contract, and in each trade. The Contractor shall make a good faith effort to employ minorities and women evenly on each of its projects. The transfer of minority or female employees or trainees from Contractor to Contractor, or from project to project, for the sole purpose of meeting the Contractor's goals shall be a violation of the contract, Executive Order 11246, as

amended, and the regulations in 41 CFR 60-4. Compliance with the goals will be measured against the total work hours performed.

(d) The Contractor shall provide written notification to the Deputy Assistant Secretary for Federal Contract Compliance, U.S. Department of Labor, within 10 working days following award of any construction subcontract in excess of $10,000 at any tier for construction work under the contract resulting from this solicitation. The notification shall list the --

(1) Name, address, and telephone number of the subcontractor;

(2) Employer's identification number of the subcontractor;

(3) Estimated dollar amount of the subcontract;

(4) Estimated starting and completion dates of the subcontract; and

(5) Geographical area in which the subcontract is to be performed.

(e) As used in this Notice, and in any contract resulting from this solicitation, the "covered area" is Tempe Reach, Arizona, Maricopa County

(End of provision)

52.226-1 UTILIZATION OF INDIAN ORGANIZATIONS AND INDIAN-OWNED ECONOMIC ENTERPRISES (JUN 2000)

(a) Definitions. As used in this clause:

"Indian" means any person who is a member of any Indian tribe, band, group, pueblo or community that is recognized by the Federal Government as eligible for services from the Bureau of Indian Affairs (BIA) in accordance with 25 U.S.C. 1452(c) and any ``Native" as defined in the Alaska Native Claims Settlement Act (43 U.S.C. 1601).

"Indian organization" means the governing body of any Indian tribe or entity established or recognized by the governing body of an Indian tribe for the purposes of 25 U.S.C., chapter 17.

"Indian-owned economic enterprise" means any Indian-owned (as determined by the Secretary of the Interior) commercial, industrial, or business activity established or organized for the purpose of profit, provided that Indian ownership constitutea not less than 51 percent of the enterprise.

"Indian tribe" means any Indian tribe, band, group, pueblo or community, including

native villages and native groups (including corporations organized by Kenai, Juneau, Sitka, and Kodiak) as defined in the Alaska Native Claims Settlement Act, that is recognized by the Federal Government as eligible for services from BIA in accordance with 25 U.S.C. 1542(c).

"Interested party" means a prime contractor or an actual or prospective offeror whose direct economic interest would be affected by the award of a subcontract or by the failure to award a subcontract.

(b) The Contractor shall use its best efforts to give Indian organizations and Indian-owned economic enterprises (25 U.S.C. 1544) the maximum practicable opportunity to participate in the subcontracts it awards to the fullest extent consistent with efficient performance of its contract.

(1) The Contracting Officer and the Contractor, acting in good faith, may rely on the representation of an Indian organization or Indian-owned economic enterprise as to its eligibility, unless an interested party challenges its status or the Contracting Officer has independent reason to question that status. In the event of a challenge to the representation of a subcontractor, the Contracting Officer will refer the matter to the U.S. Department of the Interior, Bureau of Indian Affairs (BIA), Attn: Chief, Division of Contracting and Grants Administration, 1849 C Street, NW., MS 2626-MIB, Washington, DC 20240-4000.

The BIA will determine the eligibility and notify the Contracting Officer. No incentive payment will be made within 50 working days of subcontract award or while a challenge is pending. If a subcontractor is determined to be an ineligible participant, no incentive payment will be made under the Indian Incentive Program.

(2) The Contractor may request an adjustment under the Indian Incentive Program to the following:

(i) The estimated cost of a cost-type contract.

(ii) The target cost of a cost-plus-incentive-fee prime contract.

(iii) The target cost and ceiling price of a fixed-price incentive prime contract.

(iv) The price of a firm-fixed-price prime contract.

(3) The amount of the adjustment to the prime contract is 5 percent of the estimated cost, target cost, or firm-fixed-price included in the subcontract initially awarded to the Indian organization or Indian-owned economic enterprise.

(4) The Contractor has the burden of proving the amount claimed and must assert its request for an adjustment prior to completion of contract performance.

(c) The Contracting Officer, subject to the terms and conditions of the contract and the availability of funds, will authorize an incentive payment of 5 percent of the amount paid to the subcontractor. The Contracting Officer will seek funding in accordance with agency procedures.

(End of clause)

52.228-12 Prospective Subcontractor Requests for Bonds. (OCT 1995)

In accordance with Section 806(a)(3) of Pub. L. 102-190, as amended by Sections 2091 and 8105 of Pub. L. 103-355, upon the request of a prospective subcontractor or supplier offering to furnish labor or material for the performance of this contract for which a payment bond has been furnished to the Government pursuant to the Miller Act, the Contractor shall promptly provide a copy of such payment bond to the requester.

(End of clause)

52.228-14 IRREVOCABLE LETTER OF CREDIT (DEC 1999)

(a) "Irrevocable letter of credit" (ILC), as used in this clause, means a written commitment by a federally insured financial institution to pay all or part of a stated amount of money, until the expiration date of the letter, upon presentation by the Government (the beneficiary) of a written demand therefor. Neither the financial institution nor the offeror/Contractor can revoke or condition the letter of credit.

(b) If the offeror intends to use an ILC in lieu of a bid bond, or to secure other types of bonds such as performance and payment bonds, the letter of credit and letter of confirmation formats in paragraphs (e) and (f) of this clause shall be used.

(c) The letter of credit shall be irrevocable, shall require presentation of no document other than a written demand and the ILC (including confirming letter, if any), shall be issued/confirmed by an acceptable federally insured financial institution as provided in paragraph (d) of this clause, and--

(1) If used as a bid guarantee, the ILC shall expire no earlier than 60 days after the close of the bid acceptance period;

(2) If used as an alternative to corporate or individual sureties as security for a performance or payment bond, the offeror/Contractor may submit an ILC with an initial expiration date estimated to cover the entire period for which financial security is required or may submit an ILC with an initial expiration date that is a minimum period of one year from the date of issuance. The ILC shall provide that, unless the issuer provides

the beneficiary written notice of non-renewal at least 60 days in advance of the current expiration date, the ILC is automatically extended without amendment for one year from the expiration date, or any future expiration date, until the period of required coverage is completed and the Contracting Officer provides the financial institution with a written statement waiving the right to payment. The period of required coverage shall be:

(i) For contracts subject to the Miller Act, the later of--

(A) One year following the expected date of final payment;

(B) For performance bonds only, until completion of any warranty period; or

(C) For payment bonds only, until resolution of all claims filed against the payment bond during the one-year period following final payment.

(ii) For contracts not subject to the Miller Act, the later of--

(A) 90 days following final payment; or

(B) For performance bonds only, until completion of any warranty period.

(d) Only federally insured financial institutions rated investment grade or higher shall issue or confirm the ILC. The offeror/Contractor shall provide the Contracting Officer a credit rating that indicates the financial institution has the required rating(s) as of the date of issuance of the ILC. Unless the financial institution issuing the ILC had letter of credit business of less than $25 million in the past year, ILCs over $5 million must be confirmed by another acceptable financial institution that had letter of credit business of less than $25 million in the past year.

(e) The following format shall be used by the issuing financial institution to create an ILC:

_____

[Issuing Financial Institution's Letterhead or Name and Address]

Issue Date _____

IRREVOCABLE LETTER OF CREDIT NO. _____

Account party's name _____

Account party's address _____

For Solicitation No. _____(for reference only)

TO: [U.S. Government agency]

[U.S. Government agency's address]

1. We hereby establish this irrevocable and transferable Letter of Credit in your favor for one or more drawings up to United States $_____. This Letter of Credit is payable at [issuing financial institution's and, if any, confirming financial institution's] office at [issuing financial institution's address and, if any, confirming financial institution's address] and expires with our close of business on _____, or any automatically extended expiration date.

2. We hereby undertake to honor your or the transferee's sight draft(s) drawn on the issuing or, if any, the confirming financial institution, for all or any part of this credit if presented with this Letter of Credit and confirmation, if any, at the office specified in paragraph 1 of this Letter of Credit on or before the expiration date or any automatically extended expiration date.

3. [This paragraph is omitted if used as a bid guarantee, and subsequent paragraphs are renumbered.] It is a condition of this Letter of Credit that it is deemed to be automatically extended without amendment for one year from the expiration date hereof, or any future expiration date, unless at least 60 days prior to any expiration date, we notify you or the transferee by registered mail, or other receipted means of delivery, that we elect not to consider this Letter of Credit renewed for any such additional period. At the time we notify you, we also agree to notify the account party (and confirming financial institution, if any) by the same means of delivery.

4. This Letter of Credit is transferable. Transfers and assignments of proceeds are to be effected without charge to either the beneficiary or the transferee/assignee of proceeds. Such transfer or assignment shall be only at the written direction of the Government (the beneficiary) in a form satisfactory to the issuing financial institution and the confirming financial institution, if any.

5. This Letter of Credit is subject to the Uniform Customs and Practice (UCP) for Documentary Credits, 1993 Revision, International Chamber of Commerce Publication No. 500, and to the extent not inconsistent therewith, to the laws of _____ [state of confirming financial institution, if any, otherwise state of issuing financial institution].

6. If this credit expires during an interruption of business of this financial institution as described in Article 17 of the UCP, the financial institution specifically agrees to effect payment if this credit is drawn against within 30 days after the resumption of our business.

Sincerely,

_____

[Issuing financial institution]

(f) The following format shall be used by the financial institution to confirm an ILC:

_____
[Confirming Financial Institution's Letterhead or Name and Address]

(Date) _____

Our Letter of Credit Advice Number _____

Beneficiary: _____ [U.S. Government agency]

Issuing Financial Institution: _____

Issuing Financial Institution's LC No.: _____

Gentlemen:

1. We hereby confirm the above indicated Letter of Credit, the original of which is attached, issued by _____ [name of issuing financial institution] for drawings of up to United States dollars _____/U.S. $_____ and expiring with our close of business on _____ [the expiration date], or any automatically extended expiration date.

2. Draft(s) drawn under the Letter of Credit and this Confirmation are payable at our office located at _____.

3. We hereby undertake to honor sight draft(s) drawn under and presented with the Letter of Credit and this Confirmation at our offices as specified herein.

4. [This paragraph is omitted if used as a bid guarantee, and subsequent paragraphs are renumbered.] It is a condition of this confirmation that it be deemed automatically extended without amendment for one year from the expiration date hereof, or any automatically extended expiration date, unless:

(a) At least 60 days prior to any such expiration date, we shall notify the Contracting Officer, or the transferee and the issuing financial institution, by registered mail or other receipted means of delivery, that we elect not to consider this confirmation extended for any such additional period; or

(b) The issuing financial institution shall have exercised its right to notify you or the transferee, the account party, and ourselves, of its election not to extend the expiration date of the Letter of Credit.

5. This confirmation is subject to the Uniform Customs and Practice (UCP) for Documentary Credits, 1993 Revision, International Chamber of Commerce Publication No. 500, and to the extent not inconsistent therewith, to the laws of _____ [state of confirming financial institution].

6. If this confirmation expires during an interruption of business of this financial institution as described in Article 17 of the UCP, we specifically agree to effect payment if this credit is drawn against within 30 days after the resumption of our business.

Sincerely,

_____

[Confirming financial institution]

(g) The following format shall be used by the Contracting Officer for a sight draft to draw on the Letter of Credit:

SIGHT DRAFT

_____

[City, State]

(Date) _____

[Name and address of financial institution]

Pay to the order of _____ [Beneficiary Agency] _____ the sum of United States $_____. This draft is drawn under Irrevocable Letter of Credit No. _____.

_____

[Beneficiary Agency]

By: _____

(End of clause)

52.228-15 Performance and Payment Bonds--Construction (JUL 2000)-

(a) Definitions. As used in this clause--

Original contract price means the award price of the contract; or, for requirements contracts, the price payable for the estimated total quantity; or, for indefinite-quantity contracts, the price payable for the specified minimum quantity. Original contract price does not include the price of any options, except those options exercised at the time of contract award.

(b) Amount of required bonds. Unless the resulting contract price is $100,000 or less, the successful offeror shall furnish performance and payment bonds to the Contracting Officer as follows:

(1) Performance bonds (Standard Form 25). The penal amount of performance bonds at the time of contract award shall be 100 percent of the original contract price.

(2) Payment Bonds (Standard Form 25-A). The penal amount of payment bonds at the time of contract award shall be 100 percent of the original contract price.

(3) Additional bond protection. (i) The Government may require additional performance and payment bond protection if the contract price is increased. The increase in protection generally will equal 100 percent of the increase in contract price.

(ii) The Government may secure the additional protection by directing the Contractor to increase the penal amount of the existing bond or to obtain an additional bond.

(c) Furnishing executed bonds. The Contractor shall furnish all executed bonds, including any necessary reinsurance agreements, to the Contracting Officer, within the time period specified in the Bid Guarantee provision of the solicitation, or otherwise specified by the Contracting Officer, but in any event, before starting work.

(d) Surety or other security for bonds. The bonds shall be in the form of firm commitment, supported by corporate sureties whose names appear on the list contained in Treasury Department Circular 570, individual sureties, or by other acceptable security such as postal money order, certified check, cashier's check, irrevocable letter of credit, or, in accordance with Treasury Department regulations, certain bonds or notes of the United States. Treasury Circular 570 is published in the Federal Register or may be obtained from the U.S. Department of Treasury, Financial Management Service, Surety Bond Branch, 401 14th Street, NW, 2nd Floor, West Wing, Washington, DC 20227.

(e) Notice of subcontractor waiver of protection (40 U.S.C. 270b(c). Any waiver of the right to sue on the payment bond is void unless it is in writing, signed by the person whose right is waived, and executed after such person has first furnished labor or material for use in the performance of the contract.

(End of clause)

EQUIPMENT OWNERSHIP AND OPERATING EXPENSE SCHEDULE (MAR 1995) EFARS 52-231-5000

(a) Allowable costs for construction and marine plant and equipment in sound workable condition owned or controlled and furnished by a contractor or subcontractor at any tier shall be based on actual cost data for each piece of equipment or groups of similar serial and series for which the Government can determine both ownership and operating costs from the contractor's accounting records. When both ownership and operating costs cannot be determined for any piece of equipment or groups of similar serial or series equipment from the contractor's accounting records, costs for that equipment shall be based upon the applicable provisions of EP 1110-1-8, "Construction Equipment Ownership and Operating Expense Schedule," Region VII. Working conditions shall be considered to be average for determining equipment rates using the formula provided in the schedule. For forward pricing, the schedule in effect at the time of negotiations shall apply. For retrospective pricing, the schedule in effect at the time the work was performed shall apply.

(b) Equipment rental costs are allowable, subject to the provisions of FAR 31.105(d)(ii) and FAR 31.205-36 substantiated by certified copies of paid invoices. Rates for equipment rented from an organization under common control, lease-purchase or sale-leaseback arrangements will be determined using the schedule except that rental costs leased from an organization under common control that has an established practice of leasing the same or similar equipment to unaffiliated lessees are allowable. Costs for major repairs and overhaul are unallowable.

(c) When actual equipment costs are proposed and the total amount of the pricing action is over $25,000, cost or pricing data shall be submitted on Standard Form 1411, "Contract Pricing Proposal Cover Sheet." By submitting cost or pricing data, the contractor grants to the contracting officer or an authorizing representative the right to examine those books, records, documents and other supporting data that will permit evaluation of the proposed equipment costs. After price agreement the contractor shall certify that the equipment costs of pricing data submitted are accurate, complete and current.

(End of clause)

52.232-33 PAYMENT BY ELECTRONIC FUNDS TRANSFER—CENTRAL CONTRACTOR REGISTRATION (MAY 1999)

(a) Method of payment. (1) All payments by the Government under this contract shall be made by electronic funds transfer (EFT), except as provided in paragraph (a)(2) of this

clause. As used in this clause, the term “EFT” refers to the funds transfer and may also include the payment information transfer.

(2) In the event the Government is unable to release one or more payments by EFT, the Contractor agrees to either--

(i) Accept payment by check or some other mutually agreeable method of payment; or

(ii) Request the Government to extend the payment due date until such time as the Government can make payment by EFT (but see paragraph (d) of this clause).

(b) Contractor's EFT information. The Government shall make payment to the Contractor using the EFT information contained in the Central Contractor Registration (CCR) database. In the event that the EFT information changes, the Contractor shall be responsible for providing the updated information to the CCR database.

(c) Mechanisms for EFT payment. The Government may make payment by EFT through either the Automated Clearing House (ACH) network, subject to the rules of the National Automated Clearing House Association, or the Fedwire Transfer System. The rules governing Federal payments through the ACH are contained in 31 CFR part 210.

(d) Suspension of payment. If the Contractor's EFT information in the CCR database is incorrect, then the Government need not make payment to the Contractor under this contract until correct EFT information is entered into the CCR database; and any invoice or contract financing request shall be deemed not to be a proper invoice for the purpose of prompt payment under this contract. The prompt payment terms of the contract regarding notice of an improper invoice and delays in accrual of interest penalties apply.

(e) Contractor EFT arrangements. If the Contractor has identified multiple payment receiving points (i.e., more than one remittance address and/or EFT information set) in the CCR database, and the Contractor has not notified the Government of the payment receiving point applicable to this contract, the Government shall make payment to the first payment receiving point (EFT information set or remittance address as applicable) listed in the CCR database.

(f) Liability for uncompleted or erroneous transfers. (1) If an uncompleted or erroneous transfer occurs because the Government used the Contractor's EFT information incorrectly, the Government remains responsible for--

(i) Making a correct payment;

(ii) Paying any prompt payment penalty due; and

(iii) Recovering any erroneously directed funds.

(2) If an uncompleted or erroneous transfer occurs because the Contractor's EFT information was incorrect, or was revised within 30 days of Government release of the EFT payment transaction instruction to the Federal Reserve System, and--

(i) If the funds are no longer under the control of the payment office, the Government is deemed to have made payment and the Contractor is responsible for recovery of any erroneously directed funds; or

(ii) If the funds remain under the control of the payment office, the Government shall not make payment, and the provisions of paragraph (d) of this clause shall apply.

(g) EFT and prompt payment. A payment shall be deemed to have been made in a timely manner in accordance with the prompt payment terms of this contract if, in the EFT payment transaction instruction released to the Federal Reserve System, the date specified for settlement of the payment is on or before the prompt payment due date, provided the specified payment date is a valid date under the rules of the Federal Reserve System.

(h) EFT and assignment of claims. If the Contractor assigns the proceeds of this contract as provided for in the assignment of claims terms of this contract, the Contractor shall require as a condition of any such assignment, that the assignee shall register in the CCR database and shall be paid by EFT in accordance with the terms of this clause. In all respects, the requirements of this clause shall apply to the assignee as if it were the Contractor. EFT information that shows the ultimate recipient of the transfer to be other than the Contractor, in the absence of a proper assignment of claims acceptable to the Government, is incorrect EFT information within the meaning of paragraph (d) of this clause.

(i) Liability for change of EFT information by financial agent. The Government is not liable for errors resulting from changes to EFT information made by the Contractor's financial agent.

(j) Payment information. The payment or disbursing office shall forward to the Contractor available payment information that is suitable for transmission as of the date of release of the EFT instruction to the Federal Reserve System. The Government may request the Contractor to designate a desired format and method(s) for delivery of payment information from a list of formats and methods the payment office is capable of executing. However, the Government does not guarantee that any particular format or method of delivery is available at any particular payment office and retains the latitude to use the format and delivery method most convenient to the Government. If the Government makes payment by check in accordance with paragraph (a) of this clause, the Government shall mail the payment information to the remittance address contained in the CCR database.

(End of Clause)

52.232-4001 CONTINUING CONTRACTS (ALTERNATE) (MAR 1995)
EFARS 52-232-5002

(a) Funds are not available at the inception of this contract to cover the entire contract price. The sum of $500,000.00 has been reserved for this contract and is available for payment to the contractor during the current fiscal year. It is expected that Congress will make appropriations for future fiscal years from which additional funds, together with funds provided by one or more non-federal project sponsors will be reserved for this contract. The liability of the United States for payment beyond the funds reserved for this contract is contingent on the reservation of additional funds.

(b) Failure to make payment in excess of the amount currently reserved, or that may be reserved from time to time, shall not be considered a breach of this contract, and shall not entitle the contractor to a price adjustment under the terms of this contract except as specifically provided in paragraphs (e) and (h) below.

(c) The Government may at any time reserve additional funds for payments under the contract if there are funds available for such purpose. The contracting officer will promptly notify the contractor of
any additional funds reserved for the contract by issuing and administrative modification to the contract.

(d) If earnings will be such that funds reserved for the contract will be exhausted before the end of any fiscal year, the contractor shall give written notice to the contracting officer of the estimated
date of exhaustion and of additional funds which will be needed to meet payments due or to become due under this contract during that fiscal year. This notice shall be given not less than 45 nor more than 60 days
prior to the estimated date of exhaustion.

(e) No payments will be made after exhaustion of funds except to the extent that additional funds are reserved for the contract. If and when sufficient additional funds are reserved, the contractor shall be
entitled to simple interest on any payment that the contracting officer determines was actually earned under the terms of this contract and would have been made except for exhaustion of funds. Interest shall be
computed from the time such payment would otherwise have been made until actually or constructively made, and shall be at the rate established by the Secretary of the Treasury pursuant to Public Law 92-41, 85 Stat 97, as in effect on the first day of the delay in such payment.

(f) Any suspension, delay, or interruption of work arising from exhaustion or anticipated exhaustion of funds shall not constitute a breach of this contract and shall not entitle the contractor to any price adjustment under a "Suspension of Work" or similar clause or in any other manner under this contract.

(g) An equitable adjustment in performance time shall be made for any increase in the time required for performance of any part of the work arising from exhaustion of funds or the reasonable anticipation of
exhaustion of funds.

(h) If, upon the expiration of sixty (60) days after the beginning of the fiscal year following an exhaustion of funds, the Government has failed to reserve sufficient additional funds to cover payments
otherwise due, the contractor, by written notice delivered to the contracting officer at any time before such additional funds are reserved, may elect to treat his right to proceed with the work as having been terminated. Such a termination shall be at no cost to the Government, except that, to the extent that additional funds to make payment therefore are allocated to this contract, it may be treated as a
termination for the convenience of the Government.

(i) If at any time it becomes apparent that the funds reserved for any fiscal year are in excess of the funds required to meet all payments due or to become due the contractor because of work performed and to be performed under this contract during the fiscal year, the Government reserves the right, after notice to the contractor, to reduce said reservation by the amount of such excess.

(j) The term "Reservation" means monies that have been set aside and made available for payments under this contract.

(End of clause)

52.236-4 PHYSICAL DATA (APR 1984)

Data and information furnished or referred to below is for the Contractor's information. The Government shall not be responsible for any interpretation of or conclusion drawn from the data or information by the Contractor.

(a) The indications of physical conditions on the drawings and in the specifications are the result of site investigations by (NA).

(b) Weather conditions – The Contractor shall investigate and be aware of the Hazards likely to arise from weather conditions.

(c) Transportation facilities – The contractor shall investigate the conditions of existing Public and Private Roads and clearances restrictions, bridge load limits and other limitations affecting transportation and ingress and egress at the job sites. The unavailability of transportation facilities or limitations thereof shall not become a basis for claims against the Government or extensions of time for completion of the work.

(d) N/A.

(End of clause)

52.236-16 QUANTITY SURVEYS (APR 1984) - ALTERNATE I (APR 1984)

(a) Quantity surveys shall be conducted, and the data derived from these surveys shall be used in computing the quantities of work performed and the actual construction completed and in place.

(b) The Contractor shall conduct the original and final surveys and surveys for any periods for which progress payments are requested. All these surveys shall be conducted under the direction of a representative of the Contracting Officer, unless the Contracting Officer waives this requirement in a specific instance. The Government shall make such computations as are necessary to determine the quantities of work performed or finally in place. The Contractor shall make the computations based on the surveys for any periods for which progress payments are requested.

(c) Promptly upon completing a survey, the Contractor shall furnish the originals of all field notes and all other records relating to the survey or to the layout of the work to the Contracting Officer, who shall use them as necessary to determine the amount of progress payments. The

Contractor shall retain copies of all such material furnished to the Contracting Officer.

(End of clause)

52.236-21 SPECIFICATIONS AND DRAWINGS FOR CONSTRUCTION (FEB 1997)

(a) The Contractor shall keep on the work site a copy of the drawings and specifications and shall at all times give the Contracting Officer access thereto. Anything mentioned in the specifications and not shown on the drawings, or shown on the drawings and not mentioned in the specifications, shall be of like effect as if shown or mentioned in both. In case of difference between drawings and specifications, the specifications shall govern. In case of discrepancy in the figures, in the drawings, or in the specifications, the matter shall be promptly submitted to the Contracting Officer, who shall promptly make a determination in writing. Any adjustment by the Contractor without such a determination shall be at its own risk and expense. The Contracting Officer shall furnish from time to time such detailed drawings and other information as considered necessary, unless otherwise provided.

(b) Wherever in the specifications or upon the drawings the words "directed", "required", "ordered", "designated", "prescribed", or words of like import are used, it shall be

understood that the "direction", "requirement", "order", "designation", or "prescription", of the Contracting Officer is intended and similarly the words "approved", "acceptable", "satisfactory", or words of like import shall mean "approved by," or "acceptable to", or "satisfactory to" the Contracting Officer, unless otherwise expressly stated.

(c) Where "as shown," as indicated", "as detailed", or words of similar import are used, it shall be understood that the reference is made to the drawings accompanying this contract unless stated otherwise. The word "provided" as used herein shall be understood to mean "provide complete in place," that is "furnished and installed".

(d) Shop drawings means drawings, submitted to the Government by the Contractor, subcontractor, or any lower tier subcontractor pursuant to a construction contract, showing in detail (1) the proposed fabrication and assembly of structural elements, and (2) the installation (i.e., fit, and attachment details) of materials or equipment. It includes drawings, diagrams, layouts, schematics, descriptive literature, illustrations, schedules, performance and test data, and similar materials furnished by the contractor to explain in detail specific portions of the work required by the contract. The Government may duplicate, use, and disclose in any manner and for any purpose shop drawings delivered under this contract.

(e) If this contract requires shop drawings, the Contractor shall coordinate all such drawings, and review them for accuracy, completeness, and compliance with contract requirements and shall indicate its approval thereon as evidence of such coordination and review. Shop drawings submitted to the Contracting Officer without evidence of the Contractor's approval may be returned for resubmission. The Contracting Officer will indicate an approval or disapproval of the shop drawings and if not approved as submitted shall indicate the Government's reasons therefor. Any work done before such approval shall be at the Contractor's risk. Approval by the Contracting Officer shall not relieve the Contractor from responsibility for any errors or omissions in such drawings, nor from responsibility for complying with the requirements of this contract, except with respect to variations described and approved in accordance with (f) below.

(f) If shop drawings show variations from the contract requirements, the Contractor shall describe such variations in writing, separate from the drawings, at the time of submission. If the Contracting Officer approves any such variation, the Contracting Officer shall issue an appropriate contract modification, except that, if the variation is minor or does not involve a change in price or in time of performance, a modification need not be issued.

(g) The Contractor shall submit to the Contracting Officer for approval four copies (unless otherwise indicated) of all shop drawings as called for under the various headings of these specifications. Three sets (unless otherwise indicated) of all shop drawings, will be retained by the Contracting Officer and one set will be returned to the Contractor.

(End of clause)

BASIS FOR SETTLEMENT OF PROPOSALS EFARS 52.249-5000

Actual costs will be used to determine equipment costs for a settlement proposal submitted on the total cost basis under FAR 49.206-2(b). In evaluating a terminations settlement proposal using the total costs basis, the following principals will be applied to determine allowable equipment costs:

(1) Actual costs for each piece of equipment, or groups of similar serial or series equipment, need not be available in the contractor's accounting records to determine total actual equipment costs.

(2) If equipment costs have been allocated to a contract using predetermined rates, those charges will be adjusted to actual costs.

(3) Recorded job costs adjusted for unallowable and unallowable expenses will be used to determine equipment operating expenses. [3]

(4) Ownership costs (depreciation) will be determined using the contractor's depreciation schedule (subject to the provisions of FAR
31.205-11).

(5) License, taxes, storage and insurance costs age normally recovered as an indirect expense and unless the contractor charges these costs directly to contracts, they will be recover through the indirect expense
rate.

(End of Statement)

252.236-7001 CONTRACT DRAWINGS, MAPS, AND SPECIFICATIONS (AUG 2000)

(a) The Government will provide to the Contractor, without charge, one set of contract drawings and specifications, except publications incorporated into the technical provisions by reference, in electronic or paper media as chosen by the Contracting Officer.

(b) The Contractor shall--

(1) Check all drawings furnished immediately upon receipt;

(2) Compare all drawings and verify the figures before laying out the work;

(3) Promptly notify the Contracting Officer of any discrepancies;

(4) Be responsible for any errors that might have been avoided by complying with this paragraph (b); and

(5) Reproduce and print contract drawings and specifications as needed.

(c) In general--

(1) Large-scale drawings shall govern small-scale drawings; and

(2) The Contractor shall follow figures marked on drawings in preference to scale measurements.

(d) Omissions from the drawings or specifications or the misdescription of details of work that are manifestly necessary to carry out the intent of the drawings and specifications, or that are customarily performed, shall not relieve the Contractor from performing such omitted or misdescribed details of the work. The Contractor shall perform such details as if fully and correctly set forth and described in the drawings and specifications.

(e) The work shall conform to the specifications and the contract drawings identified on the following index of drawings:
SEE DRAWING LIST

(End of clause)

252.247-7023 Transportation of Supplies by Sea (MAY 2002)

(a) Definitions. As used in this clause --

(1) "Components" means articles, materials, and supplies incorporated directly into end products at any level of manufacture, fabrication, or assembly by the Contractor or any subcontractor.

(2) "Department of Defense" (DoD) means the Army, Navy, Air Force, Marine Corps, and defense agencies.

(3) "Foreign flag vessel" means any vessel that is not a U.S.-flag vessel.

(4) "Ocean transportation" means any transportation aboard a ship, vessel, boat, barge, or ferry through international waters.

(5) "Subcontractor" means a supplier, materialman, distributor, or vendor at any level below the prime contractor whose contractual obligation to perform results from, or is conditioned upon, award of the prime contract and who is performing any part of the work or other requirement of the prime contract.

(6) "Supplies" means all property, except land and interests in land, that is clearly identifiable for eventual use by or owned by the DoD at the time of transportation by sea.

(i) An item is clearly identifiable for eventual use by the DoD if, for example, the contract documentation contains a reference to a DoD contract number or a military destination.

(ii) "Supplies" includes (but is not limited to) public works; buildings and facilities; ships; floating equipment and vessels of every character, type, and description, with parts, subassemblies, accessories, and equipment; machine tools; material; equipment; stores of all kinds; end items; construction materials; and components of the foregoing.

(7) "U.S.-flag vessel" means a vessel of the United States or belonging to the United States, including any vessel registered or having national status under the laws of the United States.

(b)(1) The Contractor shall use U.S.-flag vessels when transporting any supplies by sea under this contract.

(2) A subcontractor transporting supplies by sea under this contract shall use U.S.-flag vessels if--

(i) This contract is a construction contract; or

(ii) The supplies being transported are--

(A) Noncommercial items; or

(B) Commercial items that--

(1) The Contractor is reselling or distributing to the Government without adding value (generally, the Contractor does not add value to items that it contracts for f.o.b. destination shipment);

(2) Are shipped in direct support of U.S. military contingency operations, exercises, or forces deployed in humanitarian or peacekeeping operations; or

(3) Are commissary or exchange cargoes transported outside of the Defense Transportation System in accordance with 10 U.S.C. 2643.

(c) The Contractor and its subcontractors may request that the Contracting Officer authorize shipment in foreign-flag vessels, or designate available U.S.-flag vessels, if the Contractor or a subcontractor believes that --

(1) U.S.-flag vessels are not available for timely shipment;

(2) The freight charges are inordinately excessive or unreasonable; or

(3) Freight charges are higher than charges to private persons for transportation of like goods.

(d) The Contractor must submit any request for use of other than U.S.-flag vessels in writing to the Contracting Officer at least 45 days prior to the sailing date necessary to meet its delivery schedules. The Contracting Officer will process requests submitted after such date(s) as expeditiously as possible, but the Contracting Officer's failure to grant approvals to meet the shipper's sailing date will not of itself constitute a compensable delay under this or any other clause of this contract. Requests shall contain at a minimum --

(1) Type, weight, and cube of cargo;

(2) Required shipping date;

(3) Special handling and discharge requirements;

(4) Loading and discharge points;

(5) Name of shipper and consignee;

(6) Prime contract number; and

(7) A documented description of efforts made to secure U.S.-flag vessels, including points of contact (with names and telephone numbers) with at least two U.S.-flag carriers contacted. Copies of telephone notes, telegraphic and facsimile message or letters will be sufficient for this purpose.

(e) The Contractor shall, within 30 days after each shipment covered by this clause, provide the Contracting Officer and the Maritime Administration, Office of Cargo Preference, U.S. Department of Transportation, 400 Seventh Street SW., Washington, DC 20590, one copy of the rated on board vessel operating carrier's ocean bill of lading, which shall contain the following information:

(1) Prime contract number;

(2) Name of vessel;

(3) Vessel flag of registry;

(4) Date of loading;

(5) Port of loading;

(6) Port of final discharge;

(7) Description of commodity;

(8) Gross weight in pounds and cubic feet if available;

(9) Total ocean freight in U.S. dollars; and

(10) Name of the steamship company.

(f) The Contractor shall provide with its final invoice under this contract a representation that to the best of its knowledge and belief--

(1) No ocean transportation was used in the performance of this contract;

(2) Ocean transportation was used and only U.S.-flag vessels were used for all ocean shipments under the contract;

(3) Ocean transportation was used, and the Contractor had the written consent of the Contracting Officer for all non-U.S.-flag ocean transportation; or

(4) Ocean transportation was used and some or all of the shipments were made on non-U.S.-flag vessels without the written consent of the Contracting Officer. The Contractor shall describe these shipments in the following format:

ITEM DESCRIPTION	CONTRACT LINE ITEMS	QUANTITY

TOTAL_____

(g) If the final invoice does not include the required representation, the Government will reject and return it to the Contractor as an improper invoice for the purposes of the Prompt Payment clause of this contract. In the event there has been unauthorized use of non-U.S.-flag vessels in the performance of this contract, the Contracting Officer is entitled to equitably adjust the contract, based on the unauthorized use.

(h) In the award of subcontracts for the types of supplies described in paragraph (b)(2) of this clause, the Contractor shall flow down the requirements of this clause as follows:

(1) The Contractor shall insert the substance of this clause, including this paragraph (h), in subcontracts that exceed the simplified acquisition threshold in part 2 of the Federal Acquisition Regulation.

(2) The Contractor shall insert the substance of paragraphs (a) through (e) of this clause, and this paragraph (h), in subcontracts that are at or below the simplified acquisition threshold in part 2 of the Federal Acquisition Regulation.

(End of clause)

PIL 2003-06, 19 Feb 03 SECURITY CONTRACT LANGUAGE FOR ALL CORPS OF ENGINEERS' UNCLASSIFIED CONTRACTS

All Contractor employees (U.S. citizens and Non- U.S. citizens) working under this contract *(to include grants, cooperative agreements and task orders)* who require access to Automated Information Systems (AIS), (stand alone computers, network computers/systems, e-mail) shall, at a minimum, be designated into an ADP-III position (non-sensitive) in accordance with DoD 5220-22-R, Industrial Security Regulation. The investigative requirements for an ADP-III position are a favorable National Agency Check (NAC), SF-85P, Public Trust Position. The contractor shall have each applicable employee complete a SF-85P and submit to the Los Angeles District, ATTN: CESPL, P.O Box 532711, Los Angeles, California 90053 Security Officer within three (3) working days after award of any contract or task order, and shall be submitted prior to the individual being permitted access to an AIS. Contractors that have a commercial or government entity (CAGE) Code and Facility Security Clearance through the Defense Security Service shall process the NACs and forward visit requests/results of NAC to the Sargeant Major Jeffrey Koontz, Security Officer. For those contractors that do not have a CAGE Code or Facility Security Clearance, the USAED-L.A., P.O. Box 532711, CESPL-DE-S, Los Angeles, California 90053-2325 Security Office will process the investigation in coordination with the Contractor and contract employees.

In accordance with Engineering Regulation, ER 380-1-18, Section 4, foreign nationals who work on Corps of Engineers' contracts or task orders shall be approved by the HQUSACE Foreign Disclosure Officer or higher before beginning work on the contract/task order. This regulation includes subcontractor employees. (NOTE: exceptions to the above requirement include foreign nationals who perform janitorial and/or ground maintenance services.) The contractor shall submit to the Division/District Contract Office, the names of all foreign nationals proposed for performance under this contract/task order, along with documentation to verify that he/she was legally admitted into the United States and has authority to work and/or go to school in the US. Such documentation may include a US passport, Certificate of US citizenship (INS Form N-560 or N-561), Certificate of Naturalization (INS Form N-550 or N-570), foreign passport with I-551 stamp or attached INS Form I-94 indicating employment authorization, Alien Registration Receipt Card with photograph (INS Form I-151 or I-551), Temporary Resident Card (INS Form I-688), Employment Authorization Card (INS Form I-688A), Reentry Permit (INS Form I-327), Refugee Travel Document (INS Form I-571), Employment Authorization Document issued by the INS which contains a photograph (INS Form I-688B).

Classified contracts require the issuance of a DD Form 254 (Department of Defense Contract Security Classification Specification).

(End of Clause)

This page was intentionally left blank for duplex printing.

General Decision Number AZ020014

General Decision Number AZ020014
Superseded General Decision No. AZ010014
State: **Arizona**
Construction Type:
HEAVY
County(ies):
MARICOPA PINAL
HEAVY CONSTRUCTION PROJECTS (excluding dam construction)

Modification Number	Publication Date
0	03/01/2002
1	05/10/2002
2	12/13/2002
3	04/18/2003

COUNTY(ies):
MARICOPA PINAL

* ASBE0073B 03/01/2003

	Rates	Fringes
ASBESTOS WORKERS/INSULATORS Includes the application of all insulating materials, protective coverings, coatings, and finishes to all types of mechanical systems	22.63	5.07

ASBE0073D 02/16/2001

	Rates	Fringes
ASBESTOS REMOVAL WORKER/ HAZARDOUS MATERIAL HANDLER Includes preparation, wetting, stripping, removal, scrapping, vacuuming, bagging aand disposing of all insulation materials from mechanical systems, whether they contain asbestos or not	20.18	5.87

BOIL0627B 02/01/2001

	Rates	Fringes
BOILERMAKERS (Including Containment Lining)	22.33	10.89

---

* CARP0408E 10/01/2002

	Rates	Fringes
CARPENTERS (Including Form Work, Metal Stud Framing, and Metal Welding)	20.00	3.76

CARP1914A 09/01/2000

	Rates	Fringes
MILLWRIGHTS:		
Zone 1	19.20	5.97
Zone 2	20.58	5.97
Zone 3	21.20	5.97
Zone 4	23.70	5.97

ZONE DEFINITIONS FOR MILLWRIGHTS:
Mileage shall be calculated from the construction site to the City Hall in Phoenix or Tucson, or to the workmen's residence, whichever is less:
Zone 1: 0-30 miles
Zone 2: 30-45 miles
Zone 3: 45-60 miles
Zone 4: over 60 miles

ENGI0428D 06/01/2002

	Rates	Fringes
POWER EQUIPMENT OPERATORS:		
Group 1	16.64	5.08
Group 2	19.91	5.08
Group 3	20.99	5.08
Group 4	22.02	5.08

POWER EQUIPMENT OPERATORS CLASSIFICATIONS
GROUP 1: Loader, 3.5 cu yd and under
GROUP 2: Bulldozer; Crane, under 15 tons; Loader, over 3.5 cu yd but less than 6 cu yd; Oiler Truck; and roller
GROUP 3: Crane, over 15 tons but less than 100 tons; Loader, over 6 cu yd but less than 10 cu yd; and Mechanic
GROUP 4: Crane, 100 tons and over; Loader, 10 cu yd and over
All Operators, Oilers, and Motor Crane Drivers on equipment with Booms, except concrete pumping truck booms, including Jibs, shall receive $0.01 per hour per foot over 80 ft in addition to regular rate of pay

---

IRON0075D 08/01/2002

	Rates	Fringes
IRONWORKERS; REBAR & STRUCTURAL		
0-50 miles from City Hall in Phoenix or Tucson	20.91	10.35
50-100 miles	22.41	10.35
100-150 miles	23.66	10.35
over 150 miles	24.91	10.35

PLUM0469E 07/01/2002

	Rates	Fringes
MARICOPA COUNTY		
PLUMBERS AND PIPEFITTERS		
ZONE 1:		
Commercial	24.35	8.75
Industrial (Power Plants, Pumping Stations, Pipelines)	27.35	8.75

ZONE DEFINITIONS FOR PLUMBERS AND PIPEFITTERS:
ZONE 1: Area within a 40 mile radius of the center of Phoenix.
ZONE 2: Area outside a 40 mile radius of the center of Phoenix.
Add $3.00 to Zone 1 basic hourly rate.

PLUM0741E 07/02/2002

	Rates	Fringes
PINAL COUNTY		
PLUMBERS AND PIPEFITTERS	21.51	8.29

SUAZ2001A 02/01/1994

	Rates	Fringes
CEMENT MASONS	14.30	3.05
ELECTRICIANS	11.91	1.43

LABORERS:		
General	9.29	2.25
Landscape	5.15	
Mechanical Tools	10.58	1.76
Pipelayer	9.78	
Concrete Worker	11.66	
POWER EQUIPMENT OPERATORS:		
Backhoe	14.47	3.28
Blade/Grader/Scraper	14.64	3.28
Skip Loader	11.96	2.78
Trencher	15.10	3.28
Water Well Driller	12.80	2.68
SPRINKLER FITTER, IRRIGATION	6.65	

---

* TEAM0104C 06/01/2002

	Rates	Fringes
TRUCK DRIVERS:		
Dump Truck, 2 or 3 axle; Water Truck under 2500 gallons	14.49	4.67
Dump Truck, 4-axle	15.33	4.67
Dump Truck, 5-axle; Water Truck, 2500 gal to 3900 gal	15.88	4.67
Water Truck over 3900 gal.	16.09	4.67

WELDERS - Receive rate prescribed for craft performing operation to which welding is incidental.

==========

Unlisted classifications needed for work not included within the scope of the classifications listed may be added after award only as provided in the labor standards contract clauses (29 CFR 5.5(a)(1)(ii)).

In the listing above, the "SU" designation means that rates listed under that identifier do not reflect collectively bargained wage and fringe benefit rates. Other designations indicate unions whose rates have been determined to be prevailing.

WAGE DETERMINATION APPEALS PROCESS

1.) Has there been an initial decision in the matter? This can be:

* an existing published wage determination
* a survey underlying a wage determination
* a Wage and Hour Division letter setting forth a position on a wage determination matter
* a conformance (additional classification and rate) ruling

On survey related matters, initial contact, including requests for summaries of surveys, should be with the Wage and Hour Regional Office for the area in which the survey was conducted because those Regional Offices have responsibility for the Davis-Bacon survey program. If the response from this initial contact is not satisfactory, then the process described in 2.) and 3.) should be followed.

With regard to any other matter not yet ripe for the formal process described here, initial contact should be with the Branch of Construction Wage Determinations. Write to:

Branch of Construction Wage Determinations
Wage and Hour Division
U. S. Department of Labor
200 Constitution Avenue, N. W.

Washington, D. C. 20210

2.) If the answer to the question in 1.) is yes, then an interested party (those affected by the action) can request review and reconsideration from the Wage and Hour Administrator (See 29 CFR Part 1.8 and 29 CFR Part 7). Write to:

Wage and Hour Administrator
U.S. Department of Labor
200 Constitution Avenue, N. W.
Washington, D. C. 20210

The request should be accompanied by a full statement of the interested party's position and by any information (wage payment data, project description, area practice material, etc.) that the requestor considers relevant to the issue.

3.) If the decision of the Administrator is not favorable, an interested party may appeal directly to the Administrative Review Board (formerly the Wage Appeals Board). Write to:

Administrative Review Board
U. S. Department of Labor
200 Constitution Avenue, N. W.
Washington, D. C. 20210

4.) All decisions by the Administrative Review Board are final.

END OF GENERAL DECISION

SECTION TABLE OF CONTENTS

DIVISION 01 - GENERAL REQUIREMENTS

SECTION 01110N

SUMMARY OF WORK

PART 1 GENERAL

1.1 WORK COVERED BY CONTRACT DOCUMENTS
1.1.1 Project Description
1.1.2 Location
1.2 EXISTING WORK
1.3 LOCATION OF UNDERGROUND FACILITIES
1.3.1 Notification Prior to Excavation
1.4 YEAR 2000 (Y2K) COMPLIANCE
1.4.1 Definition - Y2K Compliant
1.4.2 Y2K Compliance Warranty

PART 2 PRODUCTS

PART 3 EXECUTION

-- End of Section Table of Contents --

SECTION 01110N

SUMMARY OF WORK

PART 1 GENERAL

1.1 WORK COVERED BY CONTRACT DOCUMENTS

1.1.1 Project Description

The work includes the construction of a new access drive and parking lot, the construction / replacement of multi-use paths, the construction of two wetland marsh areas complete with recirculating pumping and electrical system, the construction of an overlook area with ramada structure, installation of a new automatic irrigation system, the installation of habitat plantings, the initial maintenance of the project improvements, and incidental related work.

1.1.2 Location

The work shall be located along the Indian Bend Wash between McKellips Road and the Tempe Town Lake in Tempe, Arizona. The project location is illustrates on the cover sheet of the project drawings. The exact location and limits of the project area will be identified by the Contracting Officer.

The contractor shall be aware that a portion of the staging area is within the 100-year floodplain (See sheet G-4). It shall be the contractor's responsibility to research and understand the potential flood condition of this area through information obtained through the following websites: www.fema.gov; www.usgs.gov; www.fcd.maricopa.gov. The contractor shall continuously monitor gage reading and forecast and insure that their constructon equipment is protected.

1.2 EXISTING WORK

In addition to "FAR 52.236-9, Protection of Existing Vegetation, Structures, Equipment, Utilities, and Improvements":

a. Remove or alter existing work in such a manner as to prevent injury or damage to any portions of the existing work which remain.

b. Repair or replace portions of existing work which have been altered during construction operations to match existing or adjoining work, as approved by the Contracting Officer. At the completion of operations, existing work shall be in a condition equal to or better than that which existed before new work started.

1.3 LOCATION OF UNDERGROUND FACILITIES

The Contractor shall be responsible for obtaining a Drainage Permit from the City of Tempe prior to the start of excavation:

Mr. Thurston Hurst
City of Tempe Engineering
phone: (480) 350-8200
email: thurston_hurst@tempe.gov

In addition, the Contractor shall be responsible for locating all existing utilities on the site. Utilities shall be located by Blue-Staking, where applicable. The exact location of underground utilities shall be verified by the Contractor by potholing or other approved method.

1.3.1 Notification Prior to Excavation

Notify the Contracting Officer at least 15 days prior to starting excavation work. [Contact Arizona Blue-Stake 72 hours prior to excavating. Contractor is responsible for marking all utilities not marked by Blue-Stake.

]1.4 YEAR 2000 (Y2K) COMPLIANCE

Provide computer controlled facility components in the Division 2 through Division 16 specification sections that are year 2000 compliant (Y2K). computer controlled facility components refers to software driven technology and embedded microchip technology. This includes, but is not limited to, telecommunications switches, programmable thermostats, HVAC controllers, elevator controllers, utility monitoring and control systems, fire detection and suppression systems, alarms, security systems, traffic signals, and other facilities and control systems utilizing microcomputer, minicomputer, or programmable logic controllers.

1.4.1 Definition - Y2K Compliant

Computer controlled facility components that accurately process date/time data (including but not limited to, calculating, comparing and sequencing) from, inot, and between the twentieth and twenty-first centuries.

1.4.2 Y2K Compliance Warranty

For each product, component and system specified as a "computer controlled facility component" in this project, provide a statement of Y2K compliance warranty for the specific equipment. The contractor warrants that such hardware, software, and firmware product delivered under this contract shall be able to accurately process date/time data (including, but not limited to, calculating, comparing, and sequencing) from, into and between he twentieth and twenty-first centuries,a nd leap year calculations to the extent that other computer controlled components, used in combination with the computer controlled component being acquired, properly exchanges date/time data with it. If the contract requires that specific listed products must perform as a system in accordance with the foregoing warranty, then that warranty shall apply to those listed products as a system. The duration of this warranty and the remedies available to the Government for breach this warranty shall be as defined in, and subject to, the terms and limitations of the contractor's standard commercial warranty or warranties contained in this contract, provided that notwithstanding any

provision to the contrary in such commercial warranty or warranties, the remedies available to the Government under this warranty shall include repair or replacement of any listed product whose non-compliance is discovered and made known to the contractor in writing within one year (365 days) after acceptance. Nothing in this warranty shall be construed to limit any rights or remedies the Government may otherwise have under this contract with respect to defects other than Year 2000 performance.

PART 2 PRODUCTS

Not used.

PART 3 EXECUTION

Not used.

-- End of Section --

SECTION TABLE OF CONTENTS

DIVISION 01 - GENERAL REQUIREMENTS

SECTION 01200

GENERAL REQUIREMENTS

PART 1 GENERAL

1.1 REFERENCES
1.2 SUBMITTALS
1.3 GENERAL SAFETY REQUIREMENTS
1.3.1 General
1.3.2 The Prime Contractor's Superintendent
1.3.3 Activity Hazard Analysis
1.3.4 Violations
1.3.5 Fire Prevention
1.3.6 Record keeping/Reporting/Reporting Requirements
1.3.7 Accident Reporting
1.4 PROJECT SIGNS AND BULLETIN BOARDS
1.4.1 Construction Signs
1.4.2 Bulletin Board
1.5 SANITARY FACILITIES
1.6 PROJECT OFFICES
1.6.1 Contractor's Offices:
1.6.2 Contracting Officer's (Government) Office
1.7 TEMPORARY UTILITY SERVICES
1.8 MAINTENANCE AND DISPOSAL OF PROJECT FACILITIES
1.9 WORKING HOURS
1.10 PROJECT LIMITS
1.11 SCRAP, SALVAGED, AND EXCESS MATERIAL
1.11.1 Scrap and Salvaged Material
1.11.2 Excess Soil and Other Material
1.12 ARCHAEOLOGICAL FINDINGS DURING CONSTRUCTION
1.13 PROTECTION OF EXISTING WORK
1.14 PROTECTION OF PUBLIC UTILITIES
1.14.1 General
1.14.2 Blue-Stake Requirements
1.14.3 Utilities Not Shown on the Drawings
1.15 COORDINATION WITH OTHER PARTIES
1.16 PROTECTION OF EXISTING BENCH MARKS AND RIGHT-OF-WAY MARKERS
1.17 CONSTRUCTION ACCESS
1.17.1 Access to the Project Site
1.17.2 Protection of Existing Street
1.18 TRAFFIC CONTROL PLAN (BICYCLE AND VEHICULAR)
1.18.1 Traffic Control Plan Requirements
1.18.2 Other Requirements
1.19 PROTECTION OF EXISTING PUBLIC STREETS
1.19.1 Protection of Existing Public Streets
1.19.2 Transportation of Contractor's Equipment

1.20 CONSTRUCTION WATER
1.20.1 General Requirements:
1.20.2 Water for Wetland Marshes
1.20.3 Water for Irrigation System
1.21 GENERAL REQUIREMENTS FOR PUBLIC SAFETY
1.22 OCCUPATIONAL SAFETY AND HEALTH ACT (OSHA) STANDARDS
1.22.1 Accident Reporting
1.23 PERMITS
1.23.1 General
1.23.2 Air Pollution (Air Quality)Permit (APP)
1.23.3 National Pollutant Discharge Elimination System (NPDES) Permit
1.24 CONTRACTOR SAFETY PERSONNEL REQUIREMENT
1.24.1 General
1.25 NOTICE OF PARTNERSHIP
1.26 TIME EXTENSIONS FOR UNUSUALLY SEVERE WEATHER (ER 415-1-15, 31 OCT 89)
1.26.1 Determination of Unusually Severe Weather
1.26.2 Reporting of Unusually Severe Weather
1.27 REQUIRED INSURANCE
1.28 HAZARDOUS MATERIAL SPILL REPORTING

PART 2 PRODUCTS

2.1 CONSTRUCTION SIGNS
2.1.1 Materials
2.1.1.1 Lumber
2.1.1.2 Plywood
2.1.1.3 Bolts, Nuts and Nails
2.1.1.4 Paints and Oils

PART 3 EXECUTION

3.1 CONSTRUCTION OF SIGNS
3.1.1 Project and Hard Hat Signs
3.2 PAINTING SIGNS

-- End of Section Table of Contents --

SECTION 01200

GENERAL REQUIREMENTS

PART 1 GENERAL

1.1 REFERENCES

The publications listed below form a part of this specification to the extent referenced. The publications are referred to in the text by basic designation only.

ASME INTERNATIONAL (ASME)

ASME B18.2.1	(1996) Square and Hex Bolts and Screws (Inch Series)
ASME B18.2.2	(1987; R 1993) Square and Hex Nuts (Inch Series)

U.S. GENERAL SERVICES ADMINISTRATION (GSA)

CID A-A-2246	(Rev B) Paint, Latex
CID A-A-2336	(Rev A) Primer Coating (Alkyd, Exterior Wood, White and Tints)

DEPARTMENT OF COMMERCE (DOC)

DOC PS 1	(1996) Voluntary Product Standard - Construction and Industrial Plywood

ENGINEERING MANUALS (EM)

COE EM 385-1-1	(1996) Safety and Health Requirements Manual

NATIONAL INSTITUTE OF STANDARDS AND TECHNOLOGY (NIST)

NIST PS 20	(1994; Addenda Jan. 1997) American Softwood Lumbar Standards

1.2 SUBMITTALS

Government approval is required for submittals with a "G" designation; submittals not having a "G" designation are for information only. When used, a designation following the "G" designation identifies the office, that will review the submittal for the Government. The following shall be submitted in accordance with Section 01330 SUBMITTAL PROCEDURES:

SD-01 Preconstruction Submittals

Site Specific Safety and Health Plan; G

Activity Hazards Safety Analysis; G

1.3 GENERAL SAFETY REQUIREMENTS

1.3.1 General

The Corps of Engineers Safety and Health Requirements Manual, EM 385-1-1, (see CONTRACT CLAUSES: SECTION 00700, ACCIDENT PREVENTION) and the Occupational Safety and Health Act (OSHA) Standards for Construction (Title 29, Code of Federal Regulations Parts 1910 and 1926 as revised from time to time) and Cal/OSHA Title 8 Regulations are applicable to this contract. In case of conflict, the most stringent requirement of the standards is applicable. Pursuant to EM 385-1-1, the Contractor shall submit a Site-specific Safety and Health Plan.

1.3.2 The Prime Contractor's Superintendent

The Prime Contractor's superintendent shall take an active role in enforcing the safety requirements by participation in safety conferences, hazard analysis (see below), tool box meetings, walk-through inspections, correction of violations, etc., and including that of the subcontractor's work.

1.3.3 Activity Hazard Analysis

Based on the construction schedule, the Contractor shall submit an Activity Hazards Safety Analysis of each major phase or work prior to entering that phase of activity. The analysis shall include major or high risk hazards, as well as commonly recurring deficiencies that might possibly be encountered for that operation, and shall identify proposed methods and techniques of accomplishing each phase in a safe manner. The Prime Contractor's superintendent shall take active participation in the Activity Hazard Analysis, including the subcontractor's work. Prior to start of actual work a meeting shall be held with the Prime Contractor, Government, and affected subcontractor to review the Activity Hazard Analysis. In addition, job site meetings shall be held to train exhaustively foreman and workers on details of this analysis.

1.3.4 Violations

If recurring violations and/or gross violation indicate that the safety performance is unsatisfactory, corrective action shall be taken as direction and at the discretion of the Contracting Officer's Representative the retention or some part thereof will withheld from the progress payment until corrective action has been completed.

1.3.5 Fire Prevention

Cutting or welding will be permitted only in areas that are or have been

made fire safe. Where possible, all combustibles shall be located at least 36 feet horizontally from the work site. Where such location is impracticable, combustibles shall be protected with flame-proofed covers or otherwise shielded with metal asbestos guards or curtains. Edges of covers at the floor shall be tight to prevent sparks from going under them. This precaution is also important at overlaps where several covers are used to protect a large pile. Other fire prevention precautions shall be in accordance with the latest National Fire Codes.

1.3.6 Record keeping/Reporting/Reporting Requirements

On all contract operations, the Prime Contractor shall be responsible for recording and reporting all accident exposure and experience incident work. (This includes exposure and experience of the Prime Contractor and his/her sub-Contractor(s)). As a minimum these records shall include exposure work-hours and a log of occupational injuries and illnesses. (OSHA Form 200 or state equivalent as prescribed by 29 CFR 1926) Reference COE EM 385-1-1.

1.3.7 Accident Reporting

As part of the requirements for reporting accidents in accordance with EM 385-1-1, Section 1, the Prime Contractor will submit at the 50% point and 100% of project completion, a written summary of worker's compensation claims filed by workers in the project. The report will include all subcontractors. The main report covering the Prime Contractor claims will be certified as "correct and true" by the Contractor's compensation insurance carrier. The same certification will be required for subcontractor reports.

All accidents are to be reported immediately to the Contracting Officer. The Government Safety Office must be notified within 24 hours and a written report of the incident must be submitted to the Contracting Officer within 24 hours.

1.4 PROJECT SIGNS AND BULLETIN BOARDS

The Contractor shall construct and/or erect the following project signs as soon as possible and not less than 15 calendar days after notice-to-proceed.

1.4.1 Construction Signs

The signs shall include the following:

a. Project Signs: One (1) Project Sign at location designated by the Contracting Officer. The sign size, text, and format shall be in accordance with the exhibits / figures included at the end of this specification section.

b. Hard Hat Signs: Five (5) hard hat signs at locations directed. Sign size, text, and format shall be in accordance with the exhibits / figures included at the end of this specification section.

1.4.2 Bulletin Board

One (1) Bulletin Board shall be erected at the Contractor's office. The weatherproof bulletin board shall be approximately six feet (6') wide by three feet (3') high, with hinged glass door and shall be provided adjacent to or mounted on the Contractor's project office. If adjacent to the office, the bulletin board shall be securely mounted on no less than 2 posts. Bulletin board and posts shall be painted or have other approved factory finish. The bulletin board shall be easily accessible at all times and shall contain wage rates, equal opportunity notice, and such other items required to be posted.

1.5 SANITARY FACILITIES

Suitable sanitary facilities shall be provided and maintained by the Contractor for the duration of the project. Sanitary facilities shall be located as approved by the Contracting Officer.

1.6 PROJECT OFFICES

1.6.1 Contractor's Offices:

The Contractor shall install an on-site office and shall maintain this office for the duration of the project. The office shall be appropriately furnished and shall be of adequate size for the Contractor's performance of the activities and tasks specified herein. The office shall have space and furnishings as required for specified meetings between the Contracting Officer, the Government's project staff, and the Contractor's project staff. The Contractor shall be responsible for securing and paying for all utilities required for the operation of the Contractor's office. The Contractor's office shall be installed at a location approved by the Contracting Officer.

1.6.2 Contracting Officer's (Government) Office

The Contractor shall provide office space for the Contracting Officer and/or his representative. The Office shall be a minimum of eight feet (8') by ten feet (10') and shall have separate, lockable access to the outside. The office shall be equipped with a desk, chairs, a drawing layout table, and one standard two drawer file cabinet. The office shall be air conditioned and shall have electrical service for lighting and electrical equipment. The Contracting Officer's office may be in the same structure / trailer as the Contractor's Office or in a separate structure / trailer. The Contractor shall maintain this office during the course of the project. The Contractor shall be responsible for all costs associated with the installation, maintenance, and subsequent removal of this office.

1.7 TEMPORARY UTILITY SERVICES

The Contractor shall be responsible for securing and paying for all temporary utility services required for the operation of the project office(s) and for the implementation of the project work.

1.8 MAINTENANCE AND DISPOSAL OF PROJECT FACILITIES

The Contractor shall maintain the project facilities in good condition throughout the life of the project. Upon completion of work under this contract, the facilities covered under this section will remain the property of the Contractor and shall be removed from the site at his expense.

1.9 WORKING HOURS

The Contractor shall restrict all on-site construction activities to the following schedule:

Monday thru Friday	6:30 a.m. to 7:00 p.m.
Saturday	8:00 a.m. to 7:00 p.m.

No work will be permitted on Sundays or Federal Holidays without the prior written approval from the Contracting Officer.

Haul route(s) utilized by the Contractor may require restricted hauling hours. The Contractor is hereby notified that hauling activities may be restricted to normal business hours (7 a.m. to 4 p.m., or other hours established by the Contracting Officer) in the event that such operations are considered to be disruptive to existing neighborhood safety and noise conditions. In the event that such a situation develops, the Contracting Officer shall notify the Contractor of restrictive hauling times. The Contractor shall develop their schedule for construction so that restrictive hauling times can be absorbed without extending the overall contract completion period.

1.10 PROJECT LIMITS

The Contractor's work, employee parking, operations, staging, equipment assembly and maintenance, and other on-site activities shall be restricted to actual areas of construction within the approved Project Limits. The approximate limits are shown on the drawings.

Prior to the start of construction, the Contractor and Contracting Officer's Representative shall inspect the project site and mark the Project Limits (Limits of Work). The established limits will be video taped by the Contracting Officer's Representative for future reference. All work shall be performed within the limits established during this inspection. Subject to confirmation, the limits of work shall be as follows:

South of Curry Road: All areas within the Project Boundary Line as shown on the drawings.

North of Curry Road - West Levee: The top of the existing levee plus such additional space as required to construct the proposed flood walls.

North of Curry Road - East Levee: The top of the levee plus such additional space as required to construct the proposed flood walls.

North of Curry Road - Low Flow Channel: The low flow channel

bottom and side slopes up to the interface with the existing golf course. The line of demarcation between the low flow channel and the existing golf course shall be as established in the field during the site inspection noted above.

Access to these work areas shall be from existing public rights-of-way and along designated access corridors as shown or noted on the drawings.

The Contractor shall be solely responsible for obtaining agreements with adjacent land owners if the Contractor deems that additional access points, other than those shown or noted on the drawings, are advantageous to his operations. Compensation to adjacent property owners for additional access shall be at the Contractor's expense.

1.11 SCRAP, SALVAGED, AND EXCESS MATERIAL

1.11.1 Scrap and Salvaged Material

Materials indicated to be removed and not indicated to be salvaged, stored or reinstalled are designated as scrap and shall become the property of the Contractor and be removed from the site of work. The Contractor by signing this contract hereby acknowledges that he made due allowance for value, if any, of such scrap in the contract price.

1.11.2 Excess Soil and Other Material

Excess material originating from the construction of the project improvements shall be removed from the site and disposed of by the Contractor. The location for disposal of the export soil and/or waste material shall be as selected by the Contractor. Disposal shall be in accordance with all local, state, and federal regulations and in accordance with these specifications. The Contractor shall be responsible for all disposal fees.

1.12 ARCHAEOLOGICAL FINDINGS DURING CONSTRUCTION

Should the Contractor or any of his employees in the performance of this contract find or uncover any archaeological remains, he shall notify the Contracting Officer immediately. Such notifications will be a brief statement in writing giving the location and nature of the findings. Should the discovery site require archaeological studies resulting in delays and/or additional work, the Contractor will be compensated by an equitable adjustment under the CONTRACT CLAUSES of the contract.

1.13 PROTECTION OF EXISTING WORK

Before beginning any cutting or removal work, the Contractor shall carefully survey the existing work and examine the drawings and specifications to determine the extent of the work. The Contractor shall take all necessary precautions to insure against damage to such work to remain in place, to be reused, or to remain the property of the Government, and any damage to such work shall be repaired or replaced as approved by the Contracting Officer at no additional cost to the Government. The Contractor shall carefully coordinate the work of this section with all

other work and construct and maintain shoring, bracing and supports, as required.

1.14 PROTECTION OF PUBLIC UTILITIES

1.14.1 General

The approximate location of water mains, sanitary sewers, storm drains, gas pipelines, electrical power lines, communication cables, and other utilities known to exist within the limits of the work are indicated on the drawings. The sizes, locations, and type of such utilities are as per the City of Tempe's record drawing filed. Their accuracy is not guaranteed. Except as otherwise indicated on the drawings, all existing utilities will be left in place and the Contractor shall conduct his operations in such a manner that the utilities will be protected from damage at all times. The Contractor shall be responsible for the repair or replacement of all utility lines and structures damaged by his forces or activities. Repair and replacement work shall be as directed by the Contracting Officer or the subject utility company and shall be performed at the Contractor's expense.

1.14.2 Blue-Stake Requirements

The Contractor shall have the project site Blue-Staked (for existing underground utility location and marking) prior to the start of any work on the project site. Blue-Staking shall be kept current during the course of the project. All notices and requests for initial and follow-up Blue-Staking shall be the responsibility of the Contractor.

1.14.3 Utilities Not Shown on the Drawings

If the Contractor encounters, through Blue-Staking or other means, existing utilities within the project limits that are not shown on the project plans, he shall make known the presence of these utilities to the Contracting Officer. The Contracting Officer will determine if these utilities impact the implementation of the work as shown on the drawings and as specified. The Contracting Officer will direct the Contractor regarding modifications to the proposed work and/or relocation of the subject utility as appropriate. The Contractor will be entitled to an equitable adjustment in contract price and completion time if existing utilities not shown on the drawings need to be relocated.

1.15 COORDINATION WITH OTHER PARTIES

The Contractor shall coordinate his work with; the City of Tempe, the Flood Control District of Maricopa County, and the Rio Salado Golf Course Concessionaire. Coordination to be provided by the Contractor shall consist of, and be strictly limited to, meeting with representatives of these agencies and entities from time-to-time to review project issues and concerns. All requests made by any other party shall be reported to the Contracting Officer who shall have the sole authority to determine what follow-up actions, if any, are to be taken by the Contractor.

1.16 PROTECTION OF EXISTING BENCH MARKS AND RIGHT-OF-WAY MARKERS

The Contractor shall protect all existing bench marks and right-of-way markers within or adjacent to the project site. If it is necessary to temporarily remove or alter any such monument, the Contractor shall notify the Contracting Officer, in writing, 7 days in advance of the time he proposes to remove or modify the monument. Approval to modify any marker or monument, if granted by the Contracting Officer, will be contingent upon the the reestablishment and resetting of the monument by an Arizona registered Professional Land Surveyor in accordance with City of Tempe or other appropriate standards.

1.17 CONSTRUCTION ACCESS

1.17.1 Access to the Project Site

The Contractor's access to the project site for equipment, materials, and personnel shall be from Curry Road and Miller Road and from the Rio Salado Golf Course parking lot, as shown on the drawings. No other access will be allowed unless requested by the Contractor and approved in writing by the Contracting Officer.

1.17.2 Protection of Existing Street

Wor
k shall be conducted in such manner so as not to obstruct or inconvenience traffic on existing roads outside the construction limits. Spillage of earth, dusty materials, boulders, soil, or mud on public streets will not be permitted. If spillage cannot be prevented, the spillage shall be immediately removed and such areas shall be kept clear throughout the workday. At the conclusion of each workday, such traveled areas shall be cleared of spillage, boulders, soil and mud. Monitoring and clean-up work shall be the responsibility of the Contractor.

1.18 TRAFFIC CONTROL PLAN (BICYCLE AND VEHICULAR)

1.18.1 Traffic Control Plan Requirements

The Contractor shall develop a Traffic Control Plan and obtain approval for the plan from the Contracting Officer and the City of Tempe prior to the start of construction activities. The Traffic Control Plan shall address vehicular traffic on public streets and bicycle / pedestrian traffic on the existing multi-use and cart path(s). The Traffic Control Plan shall provide for the following:

a. City of Tempe public streets may not be completely closed to motor vehicle traffic at any time during construction.

b. The temporary closure of individual lanes on City of Tempe public streets may occur if necessary for project construction. The schedule and duration of lane closures shall be as approved by the Contracting Officer and the City of Tempe.

c. Individual traffic lanes may not be closed overnight.

d. Warning signs, barricades, and other devices shall be

provided and installed by the Contractor when lane closures are in effect and when work is being performed in close proximity to City of Tempe public streets.

e. Portions of the multi-use path on the west levee north and south of Curry Road may be temporarily closed for project construction. The duration of the closure shall not exceed two-weeks.

f. An off-site detour route shall be identified and marked with signs prior to the temporary closure of any segment of the existing multiple-use path on the west levee. The detour and all associated detour signs shall be as approved by the Contracting Officer and the City of Tempe.

g. Portions or all of the multi-use path on the east levee, south of Curry Road may be temporarily closed for project construction. The duration of the closure shall be as approved by the Contracting Officer.

h. The schedule and duration of individual multi-use path closures on the east levee south of Curry Road closures shall be as approved by the Contracting Officer and the City of Tempe.

i. Portions of the cart path on the east levee north of Curry Road may be closed for project construction. When closure of the cart path is required, an alternative route for golf carts, acceptable to the Contracting Officer, the City of Tempe, and the Rio Salado Golf Course shall be established and maintained.

j. The Contractor shall be responsible for obtaining all City of Tempe permits related to construction access and traffic control.

k. The Contractor shall be responsible for providing, installing, and maintaining all traffic control signs, barricades, and other devices required for the implementation of the approved traffic control plan.

1.18.2 Other Requirements

In accordance with CONTRACT CLAUSE: ACCIDENT PREVENTION, signs, barricades, and warning devices shall be provided, installed, and maintained as are required for protection of vehicular traffic at any location where operations interfere with public roads. Signs, barricades, lights, and signals, shall be in conformance with Part VI of the U.S. Department of Transportation Manual on Uniform Traffic Control Devices for Streets and Highways.

1.19 PROTECTION OF EXISTING PUBLIC STREETS

1.19.1 Protection of Existing Public Streets

The Contractor's traffic control and construction access plan shall indicate all measures to be taken to prevent soil and other material from

being transported by the contractor's vehicles and deposited on City of Tempe public streets and/or multi-use paths. The Contractor shall be responsible for maintenance of facilities installed to prevent the deposit of soil from construction vehicles on City of Tempe public streets.

1.19.2 Transportation of Contractor's Equipment

The planned method of transportation of heavy equipment to be used in the performance of this contract shall be submitted by the Contractor for approval by the Contracting Officer. The plan shall include the type, size, loading, and unloading of equipment to be used on the project.

1.20 CONSTRUCTION WATER

1.20.1 General Requirements:

The Contractor shall be responsible for obtaining and paying for all water required for construction purposes, except as noted herein.

1.20.2 Water for Wetland Marshes

Water used for the testing of the wetland marsh soil liner and for the filling of the wetland marshes shall be provided by the City of Tempe at no cost to the Contractor. Water shall be from the new well being developed by others on the project site. The Contractor shall be responsible for making all temporary and permanent connections to this water source as shown on the drawings and as required for the work.

1.20.3 Water for Irrigation System

Water used for the testing and operation of the project irrigation system shall be provided by the City of Tempe at no cost to the Contractor. Water shall be from the new well being developed by others on the project site. The Contractor shall be responsible for making all temporary and permanent connections to this water source as shown on the drawings and as required for the work.

1.21 GENERAL REQUIREMENTS FOR PUBLIC SAFETY

Attention is directed to the CONTRACT CLAUSE: PERMITS AND RESPONSIBILITIES. The Contractor shall provide temporary fencing, barricades, and/or guards, as required, to provide protection in the interest of public safety. Whenever the Contractor's operations create a condition hazardous to the public, he shall furnish at his own expense and without cost to the Government, such flagmen and guards as are necessary to give adequate warning to the public of any dangerous conditions to be encountered and he shall furnish, erect, or maintain such fences, barricades, lights, signs and other devices as are necessary to prevent accidents and avoid damage or injury to the public. Flagmen and guards, while on duty and assigned to give warning and safety devices shall conform to applicable city, county, and state requirements. Should the Contractor appear to be neglectful or negligent in furnishing adequate warning and protection measures, the Contracting Officer may direct attention to the existence of a hazard and the necessary warning and protective measures shall be furnished and

installed by the Contractor without additional cost to the Government. Should the Contracting Officer point out the inadequacy of warning and protective measures, such action of the Contracting Officer shall not relieve the Contractor from any responsibility for public safety or abrogate his obligation to furnish and pay for those devices. The installation of any general illumination shall not relieve the Contractor of his responsibility for furnishing and maintaining any protective facility.

1.22 OCCUPATIONAL SAFETY AND HEALTH ACT (OSHA) STANDARDS

The OCCUPATIONAL SAFETY and HEALTH ACT (OSHA) STANDARDS for CONSTRUCTION (Title 29, Code of Federal Regulations Part 1926 as revised from time to time) and the Corps of Engineers "Safety and Health Requirements Manual", COE EM 385-1-1, are both applicable to this contract. The most stringent requirement of the two standards will be applicable.

1.22.1 Accident Reporting

In accordance with COE EM 385-1-1, the Contractor shall submit a written summary of worker's compensation claims which have been filed by worker's in connection with work on the project. The summary shall be submitted at the time when the work is approximately 50 percent complete and at project completion. The summary shall include all subcontractors. The Contractor's and subcontractor's compensation insurance carrier shall certify that the summaries are "correct and true".

1.23 PERMITS

1.23.1 General

Reference is made to the article of the contract entitled "Permits and Responsibilities", which obligates the Contractor to obtain all required licenses and permits.

1.23.2 Air Pollution (Air Quality)Permit (APP)

The Contractor shall obtain an APP from the Maricopa County Department of Environmental Quality and/or other local, state, and federal agencies with appropriate jurisdiction.

1.23.3 National Pollutant Discharge Elimination System (NPDES) Permit

The Contractor shall obtain a NPDES permit from the United States Environmental Protection Agency (USEPA) under the Nation Wide Permit (NWP) program, which requires that a Storm Water Pollution Prevention Plan (SWPPP) shall be prepared and maintained on-site throughout the construction period. A copy of the plan shall be submitted to the Contracting Officer. In accordance with the NWP, a minimum of two (2) days prior to the start of construction activities, the Contractor shall submit a Notice of Intent (NOI) with fees to the Arizona Division of USEPA. The NOI shall be submitted on the standard EPA Form 3510-6 (8-92), and copies shall be provided to the Contracting Officer.

1.24 CONTRACTOR SAFETY PERSONNEL REQUIREMENT

1.24.1 General

Full-time, on-site, safety coverage by Contractors shall be required at all times during this contract. The Contractor shall employ at the project health and safety staff as identified in SECTION 01315 - SAFETY, HEALTH, AND EMERGENCY RESPONSE.

1.25 NOTICE OF PARTNERSHIP

The Government intends to encourage the foundation of a cohesive partnership with the Contractor and its subcontractors. This partnership will be structured to draw on the strengths of each organization to identify and achieve reciprocal goals. The objectives are effective and efficient contract performance and intended to achieve completion within budget, on schedule, and in accordance with plans and specifications. This partnership would be bilateral in makeup, and participation will be totally voluntary. Any cost associated with effectuating this partnership will be agreed to by both parties and will be shared equally with no change in contract price. To implement this partnership initiative it is anticipated that within 60 days of Notice to Proceed the Contractor's on-site project manager and the Government's Resident Engineer would attend a two day partnership development seminar/team building workshop together with the Contractor's key on-site staff and key Government personnel. Follow-up workshop of 1 to 2 days duration would be held periodically throughout the duration of the contract as agreed to by the Contractor and Government.

1.26 TIME EXTENSIONS FOR UNUSUALLY SEVERE WEATHER (ER 415-1-15, 31 OCT 89)

1.26.1 Determination of Unusually Severe Weather

This provision specifies the procedure for determination of time extensions for unusually severe weather in accordance with the CONTRACT CLAUSE: DEFAULT (FIXED PRICE CONSTRUCTION). In order for the Contracting Officer to award a time extension under this clause, the following conditions must be satisfied:

(1) The weather experienced at the project site during the contract period, or the direct impacts of such weather, must be found to be unusually severe as determined by the Contracting Officer. Severe weather shall include monsoon rain storms that prevent the normal prosecution of the work and /or water running (or standing) in the Indian Bend Wash Channel that prevents the normal prosecution of the work.

(2) The unusually severe weather must actually cause a delay to the completion of the project as determined by the Contracting Officer. The delay must be beyond the control and without the fault or negligence of the Contractor.

1.26.2 Reporting of Unusually Severe Weather

Upon acknowledgment of the Notice to Proceed (NTP) and continuing

throughout the contract, the Contractor will record on the daily CQC report, the occurrence of adverse weather and resultant impact to normally scheduled work. Actual adverse weather delay days must prevent work on critical activities for 50 percent or more of the Contractor's scheduled work day. The number of adverse weather days may include days impacted by the adverse weather, even if adverse weather occurred prior to the day recorded (as in flooding after a previous rain storm). The Contractor will be eligible for a Contract Modification / Time extension equal to the number of Unusually Severe Weather days as approved by the Contracting Officer.

1.27 REQUIRED INSURANCE

The Contractor shall procure and obtain during the entire period of his performance under this contract the following minimum insurance:

a. General Public Liability insurance for bodily injury and property damage with minimum limits of $1,000,000 combined single limit per occurrence and $1,000,000 annual aggregate for bodily injury to or death, personal injury and property damage.

b. Automobile Liability insurance for bodily injury and property damage with minimum limits of $1,000,000 combined single limit for each occurrence and $1,000,000 annual aggregate.

c. Either Workman's Compensation or Employer's Liability insurance with a minimum limit of $1,000,000.

In every case the insurance coverage shall amount to at least the limits stated above. However, where the Financial Responsibility Compulsory Insurance Law of the State in which the installation is located requires higher limits, the Automobile Liability Insurance Policy should provide coverage of at least those limits. The U.S. Army Corps of Engineers; the City of Tempe (a political subdivision of the state of Arizona); the Flood Control District of Maricopa County (a political subdivision of the State of Arizona); and the McGann & Associates / Novak Environmental Joint Venture (the project A/E), shall be named as additional insured parties and all policies issued in performance of work under this contract.

The Contractor does hereby agree to indemnify, defend, and save harmless the U. S. Army Corps of Engineers, the City of Tempe, the Flood Control District of Maricopa County, and the McGann & Associates / Novak Environmental Joint Venture from loss, damage, liability, costs, or expense to the proportionate extent caused by the Contractor, his employees, agents, subcontractors, consultants and/or consultants, or suppliers arising out of its performance of this contract, including, but not limited to the negligent acts, errors, omissions, or intentional misconduct of the Contractor, its employees, agents, subcontractors, consultants and/or subconsultants, and/or suppliers in connection with this contract.

Contractor further does hereby agree, as a precaution to the performance of any work under this contract and as a precaution to any obligation of U.S. Army Corps of Engineers to make any payment under this contract, to provide the U.S. Army Corps of Engineers with certificates of insurance in a format

acceptable to the Government.

Contractor agrees to maintain required workers compensation throughout the entire term of the contract. If Contractor does not maintain coverage throughout the entire term of the contract, Contractor agrees that Owner may, at any time the coverage is not maintained by Contractor, order the Contractor to stop work, assess liquidated damages as defined herein, suspend the contract, or terminate the contract. For each six month period this contract is in effect, Contractor agrees, prior to the expiration of the six month period, to make another written request to the insurance provider for the provision of an updated certificate. If Contractor does not make the request or does not provide the certificate before the expiration of the six month period, Contractor agrees that Government may order the Contractor to stop work, suspend the contract or terminate the contract.

1.28 HAZARDOUS MATERIAL SPILL REPORTING

The Contractor shall notify the Contracting Officer immediately after any spill, regardless of quantity, including all personnel exposures. The Contractor shall submit a written notification not later than 7 calendar days after the initial notification. The written notification shall include the following:

a. Item spilled, leaked or releases in an unauthorized manner (Identification, Quantity and Manifest Numbers).

b. Whether the amount spilled, leaked or released in an unauthorized manner is EPA reportable and, if reported, a copy of the report.

c. Exact location of the spill, leak or unauthorized release.

d. Nature of exposure to personnel.

e. Containment procedures initiated.

f. Anticipated cleanup and disposal procedure.

g. Disposal location of spill, leak or unauthorized release residue.

PART 2 PRODUCTS

2.1 CONSTRUCTION SIGNS

2.1.1 Materials

2.1.1.1 Lumber

NIST PS 20, and shall be seasoned Douglas Fir, S4S, Grade D or better except that posts, braces and spacers shall be construction Grade (WCLB).

2.1.1.2 Plywood

DOC PS 1, grade A-C, Group 1, exterior type.

2.1.1.3 Bolts, Nuts and Nails

Bolts shall conform to ASME B18.2.1, nuts shall conform to ASME B18.2.2, and nails shall conform to commercially available supplies.

2.1.1.4 Paints and Oils

Paints shall conform to CID A-A-2336 for primer and CID A-A-2246 for finish paint and lettering.

PART 3 EXECUTION

3.1 CONSTRUCTION OF SIGNS

3.1.1 Project and Hard Hat Signs

Constructed as detailed in Figures 1,2,3 and Safety Signs. Decals signs will be furnished by the Contracting Officer.

3.2 PAINTING SIGNS

All exposed surfaces and edges of plywood shall be given one coat of linseed oil and be wiped prior to applying primer. All exposed surfaces of signs and supports shall be given one coat of primer and 2 finish coats of white paint. Except as otherwise indicated, lettering on all signs shall be black and sized as indicated.

End Section

This page was intentionally left blank for duplex printing.

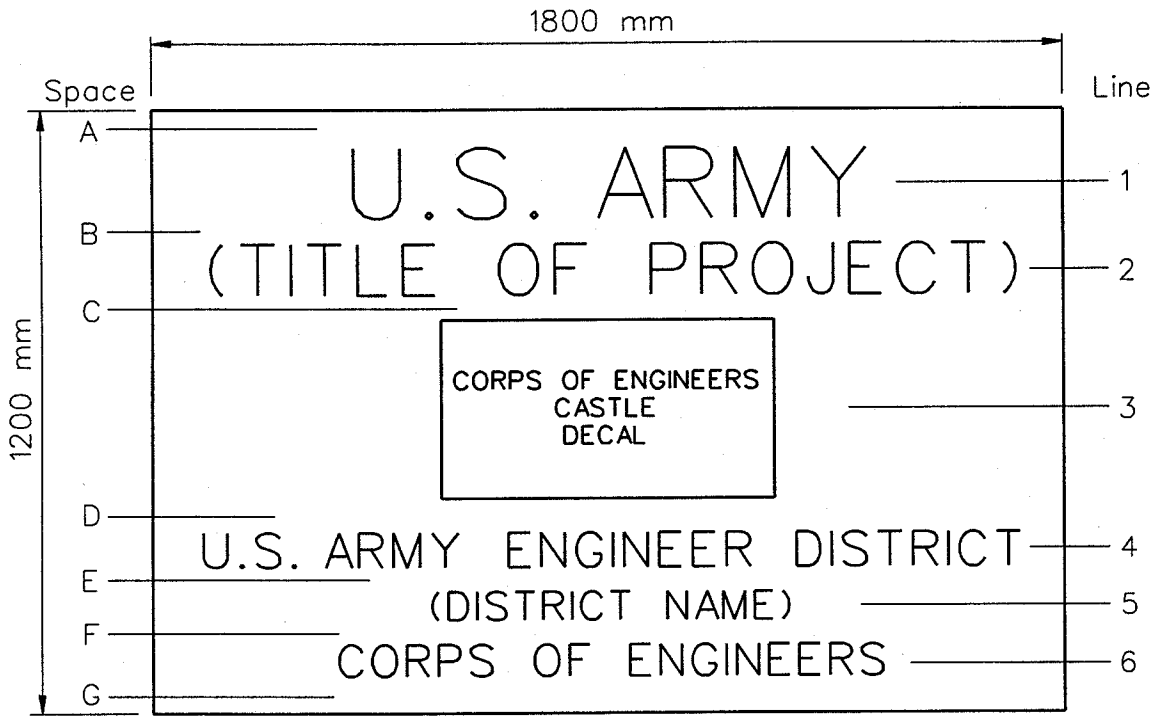

Space	Height	Line	Description	Letter Height	Stroke
A	75				
		1	U.S. ARMY	140	22
B	50				
		2	PROJECT NOMENCLATURE	100	16
C	50				
		3	CORPS OF ENGINEERS CASTLE (DECAL)	345	
D	70				
		4	U.S. ARMY ENGINEER DISTRICT	70	9
E	50				
		5	DISTRICT NAME	60	6
F	50				
		6	CORPS OF ENGINEERS	65	9
G	75				

Letter Color -- Black

PROJECT SIGN
(Army-Civil Works)

Figure 1
October 1996

All units are in millimeters.

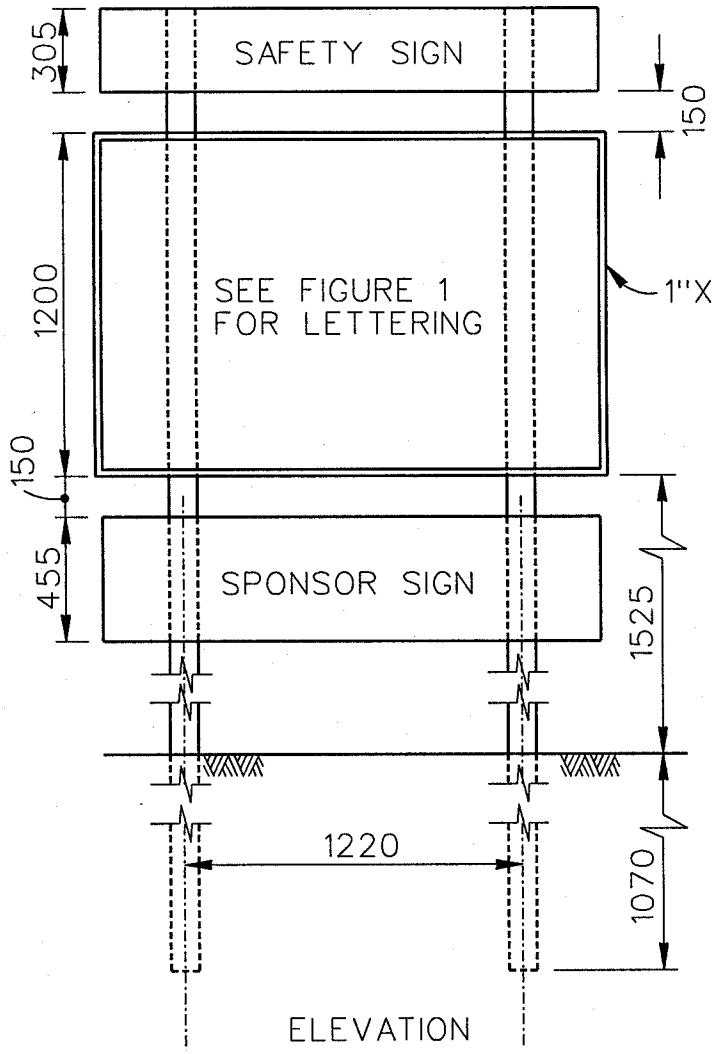

ELEVATION

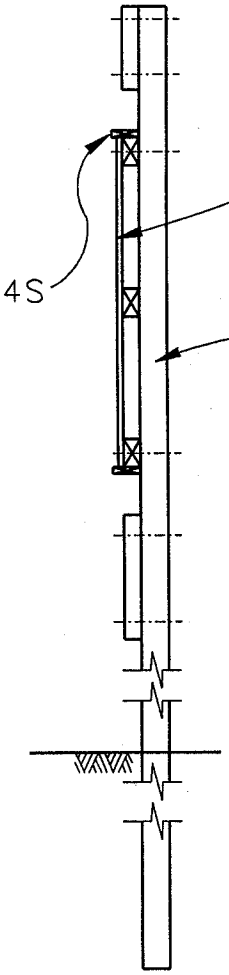

SECTION

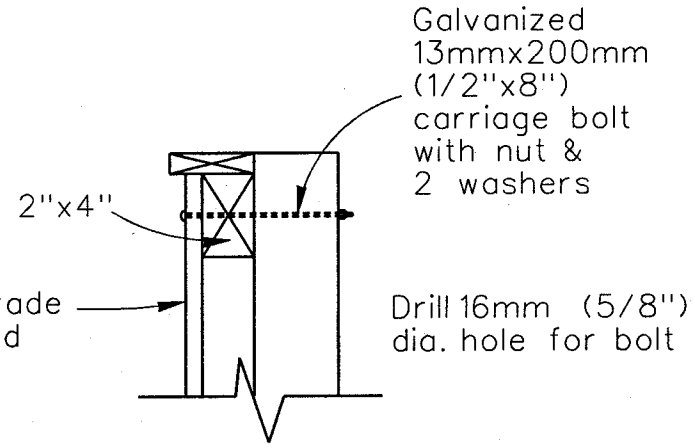

DETAIL

General Notes

1. Lumber to be cut & formed accurately.
2. Secure 1"x4" & plywood with 6d finish nails at not less than 305mm(12") O.C.
3. All exposed nails to be set & holes filled with putty.
4. Sign to be set in good solid ground & backfill carefully tamped into place.
5. Where necessary, posts shall be braced to provide a solid installation.

SIGN DETAILS

Figure 2
October 1996

All units are in millimeters unless otherwise indicated.

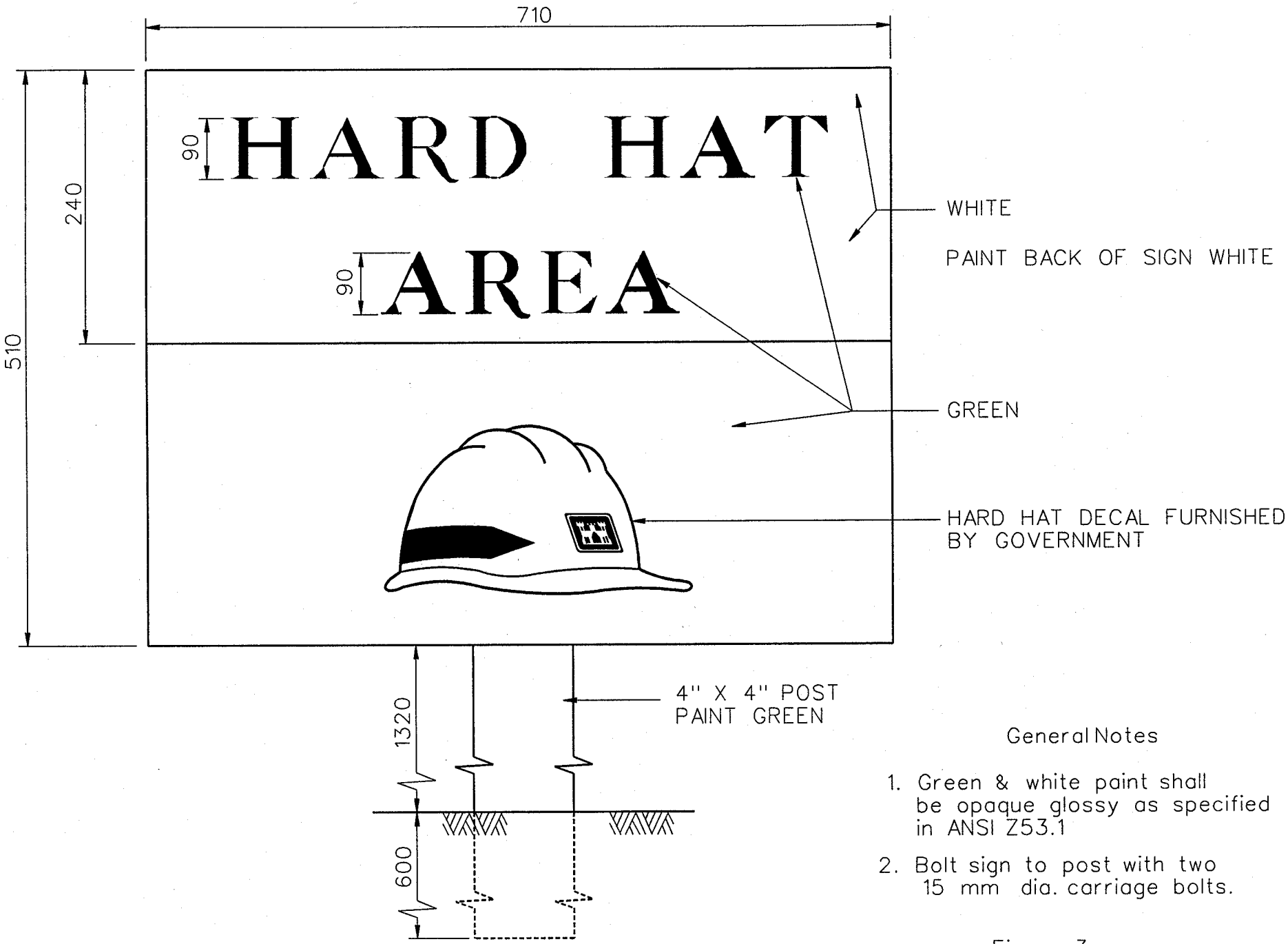

General Notes

1. Green & white paint shall be opaque glossy as specified in ANSI Z53.1
2. Bolt sign to post with two 15 mm dia. carriage bolts.

All units are in millimeters unless otherwise indicated.

Figure 3
October 1996

CORPS OF ENGINEERS U.S. ARMY

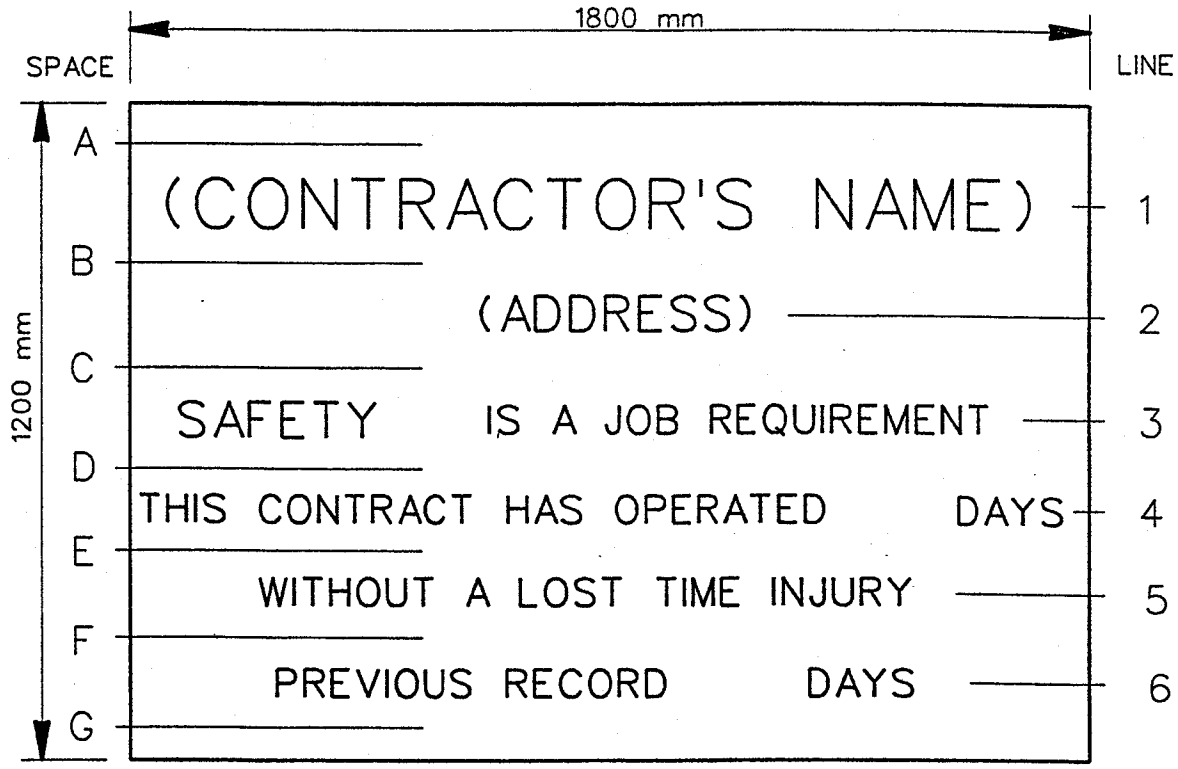

SPACE	HEIGHT	LINE	DESCRIPTION	LETTER HEIGHT
A	125			
		1	CONTRATOR'S NAME	125
B	75			
		2	ADDRESS	75
C	150			
		3	SAFETY IS A JOB REQUIREMENT	115 & 75
D	75			
		4	ALL LETTERING	75
E	75			
		5	ALL LETTERING	75
F	75			
		6	ALL LETTERING	75
G	125			

Notes

Lettering shall be black No. 27038 standard 595.
Sign shall be installed in the same manner as the Project Sign.

All units are in millimeters.

SAFETY SIGN
STANDARD DETAIL

SECTION TABLE OF CONTENTS

DIVISION 01 - GENERAL REQUIREMENTS

SECTION 01270A

MEASUREMENT AND PAYMENT

02/94

PART 1 GENERAL

1.1 LUMP SUM PAYMENT ITEMS
1.1.1 Item 1 - Mobilization and Demobilization
1.1.1.1 Payment
1.1.1.2 Unit of Measure
1.1.2 Item 2- Construction Survey and Staking
1.1.2.1 Payment
1.1.2.2 Unit of Measure
1.1.3 Item 3 - Clearing, Grubbing and Demolition
1.1.3.1 Payment
1.1.3.2 Unit of Measure
1.1.4 Item 4 - Wetland Marsh Construction
1.1.4.1 Payment
1.1.4.2 Unit of Measure
1.1.5 Item 5 - Wetland Marsh Recirculation System
1.1.5.1 Payment
1.1.5.2 Unit of Measure
1.1.6 Item 21 - Entry Drive and Parking Lot Area
1.1.6.1 Payment
1.1.6.2 Unit of Measure
1.1.7 [Enter Appropriate Subpart Title Here]
1.1.7.1 [Enter Appropriate Subpart Title Here]
1.1.8 [Enter Appropriate Subpart Title Here]
1.1.9 Item 6 - Electrical Power Supply
1.1.9.1 Payment
1.1.9.2 Unit of Measure
1.1.10 Item 7 - Electrical Power Distribution System
1.1.10.1 Payment
1.1.10.2 Unit of Measure
1.1.11 Item 8 - Control System for Wetland Marsh Level Controls
1.1.11.1 Payment
1.1.11.2 Unit of Measure
1.1.12 Item 11 - Irrigation Control System
1.1.12.1 Payment
1.1.12.2 Unit of Measure
1.1.13 Item 12 - Boring / Installation of 6" Diameter Sleeve at Curry Road
1.1.13.1 Payment
1.1.13.2 Unit of Measure
1.1.14 Item 13 - Irrigation Piping System

1.1.14.1 Payment
1.1.14.2 Unit of Measure
1.1.15 Item 22 - Overlook Ramada Area
1.1.15.1 Payment
1.1.15.2 Unit of Measure
1.1.16 Item 14 - Removal of Existing Paths
1.1.16.1 Payment
1.1.16.2 Unit of Measure
1.1.17 Item 17 - Traffic Control Signs
1.1.17.1 Payment
1.1.17.2 Unit of Measure
1.1.18 Item 18 - Initial Landscape, Irrigation, and Site Maintenance
1.1.18.1 Payment
1.1.18.2 Unit of Measure
1.1.19 Item 09 - Landscaping
1.1.19.1 Payment
1.1.19.2 Unit of Measure
1.1.20 Item 20 - McKellips Road Bridge Downstream to Sta. 36+00 (See Plan Sheet G-4)
1.1.20.1 Payment
1.1.20.2 Unit of Measure
1.2 Item 10 - Hydroseeding
1.2.1 Payment
1.2.2 Unit of Measure
1.3 Item 16 - CMU Flood Walls
1.3.1 Payment
1.3.2 Unit of Measure
1.4 UNIT PRICE PAYMENT ITEMS
1.4.1 Item 15 - New Portland Cement Concrete Multi-Use Path and Cart Path
1.4.1.1 Payment
1.4.1.2 Measurement
1.4.1.3 Unit of Measure
1.4.2 Item 19 - Cobble Surfacing at Wetland Marsh Perimeter
1.4.2.1 Payment
1.4.2.2 Measurement
1.4.2.3 Unit of Measure

PART 2 PRODUCTS (Not Applicable)

PART 3 EXECUTION (Not Applicable)

-- End of Section Table of Contents --

SECTION 01270A

MEASUREMENT AND PAYMENT
02/94

PART 1 GENERAL
1.1 LUMP SUM PAYMENT ITEMS

Payment items for the work of this contract for which contract lump sum payments will be made are listed in the BIDDING SCHEDULE and described below. All costs for items of work, which are not specifically mentioned to be included in a particular lump sum or unit price payment item, shall be included in the listed lump sum item most closely associated with the work involved. The lump sum price and payment made for each item listed shall constitute full compensation for furnishing all plant, labor, materials, and equipment, and performing any associated Contractor quality control, environmental protection, meeting safety requirements, tests and reports, and for performing all work required for which separate payment is not otherwise provided.

1.1.1 Item 1 - Mobilization and Demobilization

1.1.1.1 Payment
Payment will be made for costs associated with mobilization and demobilization, as defined in Special Clause PAYMENT FOR MOBILIZATION AND DEMOBILIZATION.

1.1.1.2 Unit of Measure
Unit of measure: lump sum.

1.1.2 Item 2- Construction Survey and Staking

1.1.2.1 Payment
Payment will be made for costs associated with the Contractor provided construction survey and staking work as required for the project.

1.1.2.2 Unit of Measure
Unit of measure: lump sum.

1.1.3 Item 3 - Clearing, Grubbing and Demolition

1.1.3.1 Payment
Payment will be made for costs associated with clearing, grubbing, demolition, and required protection of existing improvements as shown on the project plans and as required by the project specifications. Includes all noted or required demolition except as provided for in other bid items.

1.1.3.2 Unit of Measure
Unit of measure: lump sum.

1.1.4 Item 4 - Wetland Marsh Construction

1.1.4.1 Payment

Payment will be made for costs associated with the construction of overflow structures as shown on the project plans and as required by the project specifications, which payment shall constitute full compensation for all labor, materials, equipment and tools required to complete the work, including excavation, export and disposal of excess soil material; placement and grading of backfill material above the (buried) soil liner; supply, installation, grading, compaction, and testing of a treated soil liner.

1.1.4.2 Unit of Measure

Unit of measure: lump sum.

1.1.5 Item 5 - Wetland Marsh Recirculation System

1.1.5.1 Payment

Payment will be made for costs associated with the Wetland Marsh Recirculating System as shown on the project plans and as required by the project specifications, which payment shall constitute full compensation for all labor, materials, equipment and tools required to complete the work, including wetland marsh recirculation pumps, pump vaults, system intake line, force main, make-up water force main, bleed-off pipelines, equalization line, valve assemblies, access boxes, sleeves, covers, other incidental items, and including all required trenching, backfill, compaction, and testing work, complete in place.

1.1.5.2 Unit of Measure

Unit of measure: lump sum.

1.1.6 Item 21 - Entry Drive and Parking Lot Area

1.1.6.1 Payment

Payment will be made for costs associated with the Entry Drive and Parking Lot as shown on the project plans and as required by the project specifications, which payment shall constitute full compensation for all labor, materials, equipment and tools required to complete the work, including all subgrade preparation, grading, aggregate base course, asphaltic concrete pavement (surface course), concrete curbs, accessible curb ramps, and all associated construction and testing work, the installation of parking lot and entry drive pavement markings (stripes, symbols, stop bars, etc.) as shown on the project plans and as required by the project specifications, the excavation, grading, and other features of the parking lot stormwater detention basin as shown on the project plans and as required by the project specifications, the supply, installation, and testing of the parking lot lighting system as shown on the project plans and as required by the project specifications, the construction of drainage scuppers as shown on the project plans and as required by the project specifications, complete in place.

1.1.6.2 Unit of Measure

Unit of measure: lump sum.

1.1.7 [Enter Appropriate Subpart Title Here]1.1.7.1 [Enter Appropriate Subpart Title Here]1.1.8 [Enter Appropriate Subpart Title Here]

1.1.9 Item 6 - Electrical Power Supply

1.1.9.1 Payment
Payment will be made for costs associated with supply, installation, and testing of all materials and equipment associated with the project electrical power supply as shown on the project plans and as required by the project specifications.

1.1.9.2 Unit of Measure
Unit of measure: lump sum.

1.1.10 Item 7 - Electrical Power Distribution System

1.1.10.1 Payment
Payment will be made for costs associated with the trench excavation, backfill, compaction, conduit and pull box installation, electrical conductor installation, and the testing of the electrical power distribution system as shown on the project plans and as required by the project specifications.

1.1.10.2 Unit of Measure
Unit of measure: lump sum.

1.1.11 Item 8 - Control System for Wetland Marsh Level Controls

1.1.11.1 Payment
Payment will be made for costs associated with the supply, installation, and testing of the wetland marsh water level control system as shown on the project plans and as required by the project specifications.

1.1.11.2 Unit of Measure
Unit of measure: lump sum.

1.1.12 Item 11 - Irrigation Control System

1.1.12.1 Payment
Payment will be made for costs associated with the supply, installation, testing, of the irrigation control system as shown on the project plans and as required by the project specifications.
1.1.12.2 Unit of Measure
Unit of measure: lump sum.

1.1.13 Item 12 - Boring / Installation of 6" Diameter Sleeve at Curry Road

1.1.13.1 Payment
Payment will be made for costs associated with the installation of the 6" sleeve under Curry Road as shown on the project plans and as required by the project specifications.

1.1.13.2 Unit of Measure
Unit of Measure: lump sum

1.1.14 Item 13 - Irrigation Piping System

1.1.14.1 Payment

Payment will be made for costs associated with the Irrigation Piping System as shown on the project plans and as required by the project specifications, which payment shall constitute full compensation for all labor, materials, equipment and tools required to complete the work, including supply, installation, and testing of the irrigation mainlines, gate valve assemblies, ball valve assemblies, quick-coupling valve assemblies, remote control valve assemblies (1" size), irrigation lateral pipelines, lateral flush cap assemblies, single-outlet emitter assemblies, and multi-outlet emitter assemblies, complete in place.

1.1.14.2 Unit of Measure
Unit of Measure: lump sum

1.1.15 Item 22 - Overlook Ramada Area

1.1.15.1 Payment
Payment will be made for costs associated for the Overlook Ramada and appurtenances as shown on the project plans and as required by the project specifications, which payment shall constitute full compensation for all labor, materials, equipment and tools required to complete the work, including the furnishing of shop drawings and other engineering documents, the supply, installation, and finishing of the ramada structure; supply and installation of a drinking fountain and associated potable water service and backflow preventer; compaction of the associated soil backfill material; supply and installation of cast-in-place concrete headers, precast concrete unit pavement, decorative metal fencing, metal benches, bicycle racks and trash receptacles, complete in place.

1.1.15.2 Unit of Measure
Unit of measure: lump sum.

1.1.16 Item 14 - Removal of Existing Paths

1.1.16.1 Payment
Payment will be made for costs associated with the Removal of Existing Paths, which payment shall constitute full compensation for all labor, materials, equipment and tools required to complete the work, including the demolition and removal from the site of designated portions of the existing asphaltic concrete and/or portland cement concrete multi-use path on the west levee, south of Curry Road; and the demolition and removal from the site of designated portions of the existing portland cement concrete cart path through the low-flow channel north of Curry Road; and the removal of other existing path segments as shown on the project plans and as required by the project specifications.

1.1.16.2 Unit of Measure
Unit of Measure: lump sum.

1.1.17 Item 17 - Traffic Control Signs

1.1.17.1 Payment
Payment will be made for costs associated with the supply and installation of Traffic Control Signs and associated posts, including bicycle and motor vehicle signs, handicapped parking space signs, and the relocation of all

existing flood control signs as shown on the project plans or as required by the project specifications, complete in place.

1.1.17.2 Unit of Measure
Unit of measure: lump sum.

1.1.18 Item 18 - Initial Landscape, Irrigation, and Site Maintenance

1.1.18.1 Payment

Payment will be made for costs associated with the initial 180 day landscape,irrigation, and site maintenance period as noted on the project plans and as required by the project specifications.

1.1.18.2 Unit of Measure
Unit of measure: lump sum.

1.1.19 Item 09 - Landscaping

1.1.19.1 Payment

Payment will be made for costs associated with the Landscaping as shown on the project plans and as required by the project specifications, which payment shall constitute full compensation for all labor, materials, equipment for furnishing, transporting, and installing the landscaping constituting full compensation for obtaining plants which include 24" box size trees, 15 gallon box size trees, 5 gallon container size shrubs, and 1 gallon container size shrubs, aquatic plants, tree staking, pole planting backfilling, soil preparation and plant establishment, as required

1.1.19.2 Unit of Measure
Unit of measure: lump sum.

1.1.20 Item 20 - McKellips Road Bridge Downstream to Sta. 36+00 (See Plan Sheet G-4)

1.1.20.1 Payment
Payment will be made for costs associated with operations necessary for providing all labor, materials, and equipment and tools for furnishing, transporting, and installing the landscaping and hydroseeding constituting full compensation for obtaining plants, backfilling, soil preparation and plant establishment, as specified. Also, payment will be made for costs associated with the irrigation piping system as shown on the project plans and as required by the project specifications, which payment shall constitute full compensation for all labor, materials, equipment and tools required to complete the work, including supply, installation, and testing of the irrigation mainlines and lateral lines, lateral flush cap assemblies, single-outlet and multi-outlet emitter assemblies, complete in place.

1.1.20.2 Unit of Measure
Unit of measure: lump sum.

1.2 Item 10 - Hydroseeding

1.2.1 Payment
Payment will be made for costs associated with the supply and installation of hydroseeding and the establishment of hydroseeded areas as shown on the project plans and as required by the project specifications, including surface preparation complete in place.

1.2.2 Unit of Measure
Unit of Measure: lump sum

1.3 Item 16 - CMU Flood Walls

1.3.1 Payment
Payment will be made for costs associated with the supply and installation of the CMU Flood Walls as shown on the project plans and as required by the project specifications, including CMU wall installed, inclusive of all excavation, backfill, footing construction, and related work, complete in place.

1.3.2 Unit of Measure
Unit of Measure: lumpsum

1.4 UNIT PRICE PAYMENT ITEMS

Payment items for the work of this contract on which the contract unit price payments will be made are listed in the BIDDING SCHEDULE and described below. The unit price and payment made for each item listed shall constitute full compensation for furnishing all plant, labor, materials, and equipment, and performing any associated Contractor quality control, environmental protection, meeting safety requirements, tests and reports, and for performing all work required for each of the unit price items.

1.4.1 Item 15 - New Portland Cement Concrete Multi-Use Path and Cart Path

1.4.1.1 Payment
Payment will be made for costs associated with the construction, finishing, and curing of new portland cement concrete paths (multi-use paths and cart paths) as shown on the project plans and as required by the project specifications.

1.4.1.2 Measurement
The total quantity of new portland cement concrete multi-use path and cart path will be measured as the surface area of the new path, complete-in-place.

1.4.1.3 Unit of Measure
Unit of Measure: square feet

1.4.2 Item 19 - Cobble Surfacing at Wetland Marsh Perimeter

1.4.2.1 Payment
Payment will be made for costs associated with the installation of river rock cobble surfacing at the perimeter for the Wetland Marsh perimeter as

shown on the project plans and as required by the project specifications.

1.4.2.2 Measurement

The total quantity of cobble surfacing will be measured as the surface area of the cobble installed, complete-in-place.

1.4.2.3 Unit of Measure

Unit of Measure: square feet

PART 2 PRODUCTS (Not Applicable)

PART 3 EXECUTION (Not Applicable)

-- End of Section --

This page was intentionally left blank for duplex printing.

SECTION TABLE OF CONTENTS

DIVISION 01 - GENERAL REQUIREMENTS

SECTION 01312A

QUALITY CONTROL SYSTEM (QCS)

PART 1 GENERAL

1.1 General Requirements
1.2 Correspondence and Electronic Communications
1.3 Other Factors
1.4 QCS SOFTWARE
1.5 SYSTEM REQUIREMENTS
1.6 RELATED INFORMATION
1.6.1 QCS User Guide
1.6.2 Contractor Quality Control(CQC) Training
1.7 CONTRACT DATABASE
1.8 DATABASE MAINTENANCE
1.8.1 Administration
1.8.1.1 Contractor Information
1.8.1.2 Subcontractor Information
1.8.1.3 Correspondence
1.8.1.4 Equipment
1.8.1.5 Management Reporting
1.8.2 Finances
1.8.2.1 Pay Activity Data
1.8.2.2 Payment Requests
1.8.3 Quality Control (QC)
1.8.3.1 Daily Contractor Quality Control (CQC) Reports.
1.8.3.2 Deficiency Tracking.
1.8.3.3 Three-Phase Control Meetings
1.8.3.4 Accident/Safety Tracking.
1.8.3.5 Features of Work
1.8.3.6 QC Requirements
1.8.4 Submittal Management
1.8.5 Schedule
1.8.6 Import/Export of Data
1.9 IMPLEMENTATION
1.10 DATA SUBMISSION VIA COMPUTER DISKETTE OR CD-ROM
1.10.1 File Medium
1.10.2 Disk or CD-ROM Labels
1.10.3 File Names
1.11 MONTHLY COORDINATION MEETING
1.12 NOTIFICATION OF NONCOMPLIANCE

-- End of Section Table of Contents --

SECTION 01312A

QUALITY CONTROL SYSTEM (QCS)

PART 1 GENERAL

1.1 General Requirements

The Government will use the Resident Management System for Windows (RMS) to assist in its monitoring and administration of this contract. The Contractor shall use the Government-furnished Construction Contractor Module of RMS, referred to as QCS, to record, maintain, and submit various information throughout the contract period. This joint Government-Contractor use of RMS and QCS will facilitate electronic exchange of information and overall management of the contract. QCS provides the means for the Contractor to input, track, and electronically share information with the Government in the following areas:

Administration
Finances
Quality Control
Submittal Monitoring
Scheduling
Import/Export of Data

1.2 Correspondence and Electronic Communications

For ease and speed of communications, both Government and Contractor will, to the maximum extent feasible, exchange correspondence and other documents in electronic format. Correspondence, pay requests and other documents comprising the official contract record shall also be provided in paper format, with signatures and dates where necessary. Paper documents will govern, in the event of discrepancy with the electronic version.

1.3 Other Factors

Particular attention is directed to Contract Clause, "Schedules for Construction Contracts", Contract Clause, "Payments", Section 01320A, PROJECT SCHEDULE, Section 01330, SUBMITTAL PROCEDURES, and Section 01451A, CONTRACTOR QUALITY CONTROL, which have a direct relationship to the reporting to be accomplished through QCS. Also, there is no separate payment for establishing and maintaining the QCS database; all costs associated therewith shall be included in the contract pricing for the work.

1.4 QCS SOFTWARE

QCS is a Windows-based program that can be run on a stand-alone personal computer or on a network. The Government will make available the QCS software to the Contractor after award of the construction contract. Prior

to the Pre-Construction Conference, the Contractor shall be responsible to download, install and use the latest version of the QCS software from the Government's RMS Internet Website. Upon specific justification and request by the Contractor, the Government can provide QCS on 3-1/2 inch high-density diskettes or CD-ROM. Any program updates of QCS will be made available to the Contractor via the Government RMS Website as they become available.

1.5 SYSTEM REQUIREMENTS

The following listed hardware and software is the minimum system configuration that the Contractor shall have to run QCS:

Hardware

IBM-compatible PC with 200 MHz Pentium or higher processor

32+ MB RAM

4 GB hard drive disk space for sole use by the QCS system

3 1/2 inch high-density floppy drive

Compact disk (CD) Reader

Color monitor

Laser printer compatible with HP LaserJet III or better, with minimum 4 MB installed memory.

Connection to the Internet, minimum 28 BPS

Software

MS Windows 95 or newer version operating system (MS Windows NT 4.0 or newer is recommended)

Word Processing software compatible with MS Word 97 or newer

Internet browser

The Contractor's computer system shall be protected by virus protection software that is regularly upgraded with all issued manufacturer's updates throughout the life of the contract.

Electronic mail (E-mail) compatible with MS Outlook

1.6 RELATED INFORMATION

1.6.1 QCS User Guide

After contract award, the Contractor shall download instructions for the installation and use of QCS from the Government RMS Internet Website; the

Contractor can obtain the current address from the Government. In case of justifiable difficulties, the Government will provide the Contractor with a CD-ROM containing these instructions.

1.6.2 Contractor Quality Control(CQC) Training

The use of QCS will be discussed with the Contractor's QC System Manager during the mandatory CQC Training class.

1.7 CONTRACT DATABASE

Prior to the pre-construction conference, the Government shall provide the Contractor with basic contract award data to use for QCS. The Government will provide data updates to the Contractor as needed, generally by files attached to E-mail. These updates will generally consist of submittal reviews, correspondence status, QA comments, and other administrative and QA data.

1.8 DATABASE MAINTENANCE

The Contractor shall establish, maintain, and update data for the contract in the QCS database throughout the duration of the contract. The Contractor shall establish and maintain the QCS database at the Contractor's site office. Data updates to the Government shall be submitted by E-mail with file attachments, e.g., daily reports, schedule updates, payment requests. If permitted by the Contracting Officer, a data diskette or CD-ROM may be used instead of E-mail (see Paragraph DATA SUBMISSION VIA COMPUTER DISKETTE OR CD-ROM). The QCS database typically shall include current data on the following items:

1.8.1 Administration

1.8.1.1 Contractor Information

The database shall contain the Contractor's name, address, telephone numbers, management staff, and other required items. Within 14 calendar days of receipt of QCS software from the Government, the Contractor shall deliver Contractor administrative data in electronic format via E-mail.

1.8.1.2 Subcontractor Information

The database shall contain the name, trade, address, phone numbers, and other required information for all subcontractors. A subcontractor must be listed separately for each trade to be performed. Each subcontractor/trade shall be assigned a unique Responsibility Code, provided in QCS. Within 14 calendar days of receipt of QCS software from the Government, the Contractor shall deliver subcontractor administrative data in electronic format via E-mail.

1.8.1.3 Correspondence

All Contractor correspondence to the Government shall be identified with a serial number. Correspondence initiated by the Contractor's site office shall be prefixed with "S". Letters initiated by the Contractor's home

(main) office shall be prefixed with "H". Letters shall be numbered starting from 0001. (e.g., H-0001 or S-0001). The Government's letters to the Contractor will be prefixed with "C".

1.8.1.4 Equipment

The Contractor's QCS database shall contain a current list of equipment planned for use or being used on the jobsite, including the most recent and planned equipment inspection dates.

1.8.1.5 Management Reporting

QCS includes a number of reports that Contractor management can use to track the status of the project. The value of these reports is reflective of the quality of the data input, and is maintained in the various sections of QCS. Among these reports are: Progress Payment Request worksheet, QA/QC comments, Submittal Register Status, Three-Phase Inspection checklists.

1.8.2 Finances

1.8.2.1 Pay Activity Data

The QCS database shall include a list of pay activities that the Contractor shall develop in conjunction with the construction schedule. The sum of all pay activities shall be equal to the total contract amount, including modifications. Pay activities shall be grouped by Contract Line Item Number (CLIN), and the sum of the activities shall equal the amount of each CLIN. The total of all CLINs equals the Contract Amount.

1.8.2.2 Payment Requests

All progress payment requests shall be prepared using QCS. The Contractor shall complete the payment request worksheet and include it with the payment request. The work completed under the contract, measured as percent or as specific quantities, shall be updated at least monthly. After the update, the Contractor shall generate a payment request report using QCS. The Contractor shall submit the payment requests with supporting data by E-mail with file attachment(s). If permitted by the Contracting Officer, a data diskette may be used instead of E-mail. A signed paper copy of the approved payment request is also required, which shall govern in the event of discrepancy with the electronic version.

1.8.3 Quality Control (QC)

QCS provides a means to track implementation of the 3-phase QC Control System, prepare daily reports, identify and track deficiencies, document progress of work, and support other contractor QC requirements. The Contractor shall maintain this data on a daily basis. Entered data will automatically output to the QCS generated daily report. The Contractor shall provide the Government a Contractor Quality Control (CQC) Plan within the time required in Section 01451A, CONTRACTOR QUALITY CONTROL. Within seven calendar days of Government acceptance, the Contractor shall submit a data diskette or CD-ROM reflecting the information contained in the accepted CQC Plan: schedule, pay activities, features of work, submittal

register, QC requirements, and equipment list.

1.8.3.1 Daily Contractor Quality Control (CQC) Reports.

QCS includes the means to produce the Daily CQC Report. The Contractor may use other formats to record basic QC data. However, the Daily CQC Report generated by QCS shall be the Contractor's official report. Data from any supplemental reports by the Contractor shall be summarized and consolidated onto the QCS-generated Daily CQC Report. Daily CQC Reports shall be submitted as required by Section 01451A, CONTRACTOR QUALITY CONTROL. Reports shall be submitted electronically to the Government using E-mail or diskette within 24 hours after the date covered by the report. Use of either mode of submittal shall be coordinated with the Government representative. The Contractor shall also provide the Government a signed, printed copy of the daily CQC report.

1.8.3.2 Deficiency Tracking.

The Contractor shall use QCS to track deficiencies. Deficiencies identified by the Contractor will be numerically tracked using QC punch list items. The Contractor shall maintain a current log of its QC punch list items in the QCS database. The Government will log the deficiencies it has identified using its QA punch list items. The Government's QA punch list items will be included in its export file to the Contractor. The Contractor shall regularly update the correction status of both QC and QA punch list items.

1.8.3.3 Three-Phase Control Meetings

The Contractor shall maintain scheduled and actual dates and times of preparatory and initial control meetings in QCS.

1.8.3.4 Accident/Safety Tracking.

The Government will issue safety comments, directions, or guidance whenever safety deficiencies are observed. The Government's safety comments will be included in its export file to the Contractor. The Contractor shall regularly update the correction status of the safety comments. In addition, the Contractor shall utilize QCS to advise the Government of any accidents occurring on the jobsite. This brief supplemental entry is not to be considered as a substitute for completion of mandatory reports, e.g., ENG Form 3394 and OSHA Form 200.

1.8.3.5 Features of Work

The Contractor shall include a complete list of the features of work in the QCS database. A feature of work may be associated with multiple pay activities. However, each pay activity (see subparagraph "Pay Activity Data" of paragraph "Finances") will only be linked to a single feature of work.

1.8.3.6 QC Requirements

The Contractor shall develop and maintain a complete list of QC testing,

transferred and installed property, and user training requirements in QCS. The Contractor shall update all data on these QC requirements as work progresses, and shall promptly provide this information to the Government via QCS.

1.8.4 Submittal Management

The Government will provide the initial submittal register, ENG Form 4288, SUBMITTAL REGISTER, in electronic format. Thereafter, the Contractor shall maintain a complete list of all submittals, including completion of all data columns. Dates on which submittals are received and returned by the Government will be included in its export file to the Contractor. The Contractor shall use QCS to track and transmit all submittals. ENG Form 4025, submittal transmittal form, and the submittal register update, ENG Form 4288, shall be produced using QCS. RMS will be used to update, store and exchange submittal registers and transmittals, but will not be used for storage of actual submittals.

1.8.5 Schedule

The Contractor shall develop a construction schedule consisting of pay activities, in accordance with Contract Clause "Schedules for Construction Contracts", or Section 01320A, PROJECT SCHEDULE, as applicable. This schedule shall be input and maintained in the QCS database either manually or by using the Standard Data Exchange Format (SDEF) (see Section 01320A PROJECT SCHEDULE). The updated schedule data shall be included with each pay request submitted by the Contractor.

1.8.6 Import/Export of Data

QCS includes the ability to export Contractor data to the Government and to import submittal register and other Government-provided data, and schedule data using SDEF.

1.9 IMPLEMENTATION

Contractor use of QCS as described in the preceding paragraphs is mandatory. The Contractor shall ensure that sufficient resources are available to maintain its QCS database, and to provide the Government with regular database updates. QCS shall be an integral part of the Contractor's management of quality control.

1.10 DATA SUBMISSION VIA COMPUTER DISKETTE OR CD-ROM

The Government-preferred method for Contractor's submission of updates, payment requests, correspondence and other data is by E-mail with file attachment(s). For locations where this is not feasible, the Contracting Officer may permit use of computer diskettes or CD-ROM for data transfer. Data on the disks or CDs shall be exported using the QCS built-in export function. If used, diskettes and CD-ROMs will be submitted in accordance with the following:

1.10.1 File Medium

The Contractor shall submit required data on 3-1/2 inch double-sided high-density diskettes formatted to hold 1.44 MB of data, capable of running under Microsoft Windows 95 or newer. Alternatively, CD-ROMs may be used. They shall conform to industry standards used in the United States. All data shall be provided in English.

1.10.2 Disk or CD-ROM Labels

The Contractor shall affix a permanent exterior label to each diskette and CD-ROM submitted. The label shall indicate in English, the QCS file name, full contract number, contract name, project location, data date, name and telephone number of person responsible for the data.

1.10.3 File Names

The Government will provide the file names to be used by the Contractor with the QCS software.

1.11 MONTHLY COORDINATION MEETING

The Contractor shall update the QCS database each workday. At least monthly, the Contractor shall generate and submit an export file to the Government with schedule update and progress payment request. As required in Contract Clause "Payments", at least one week prior to submittal, the Contractor shall meet with the Government representative to review the planned progress payment data submission for errors and omissions. The Contractor shall make all required corrections prior to Government acceptance of the export file and progress payment request. Payment requests accompanied by incomplete or incorrect data submittals will be returned. The Government will not process progress payments until an acceptable QCS export file is received.

1.12 NOTIFICATION OF NONCOMPLIANCE

The Contracting Officer will notify the Contractor of any detected noncompliance with the requirements of this specification. The Contractor shall take immediate corrective action after receipt of such notice. Such notice, when delivered to the Contractor at the work site, shall be deemed sufficient for the purpose of notification.

-- End of Section --

SECTION TABLE OF CONTENTS

DIVISION 01 - GENERAL REQUIREMENTS

SECTION 01320A

PROJECT SCHEDULE

PART 1 GENERAL

1.1 REFERENCES
1.2 QUALIFICATIONS

PART 2 PRODUCTS (Not Applicable)

PART 3 EXECUTION

3.1 GENERAL REQUIREMENTS
3.2 BASIS FOR PAYMENT
3.3 PROJECT SCHEDULE
3.3.1 Use of the Critical Path Method
3.3.2 Level of Detail Required
3.3.2.1 Activity Durations
3.3.2.2 Procurement Activities
3.3.2.3 Critical Activities
3.3.2.4 Government Activities
3.3.2.5 Responsibility
3.3.2.6 Work Areas
3.3.2.7 Modification or Claim Number
3.3.2.8 Bid Item
3.3.2.9 Phase of Work
3.3.2.10 Category of Work
3.3.2.11 Feature of Work
3.3.3 Scheduled Project Completion
3.3.3.1 Project Start Date
3.3.3.2 Constraint of Last Activity
3.3.3.3 Early Project Completion
3.3.4 Interim Completion Dates
3.3.4.1 Start Phase
3.3.4.2 End Phase
3.3.4.3 Phase X
3.3.5 Default Progress Data Disallowed
3.3.6 Out-of-Sequence Progress
3.3.7 Negative Lags
3.4 PROJECT SCHEDULE SUBMISSIONS
3.4.1 Preliminary Project Schedule Submission
3.4.2 Initial Project Schedule Submission
3.4.3 Periodic Schedule Updates
3.4.4 Standard Activity Coding Dictionary
3.5 SUBMISSION REQUIREMENTS

3.5.1 Data Disks
3.5.1.1 File Medium
3.5.1.2 Disk Label
3.5.1.3 File Name
3.5.2 Narrative Report
3.5.3 Approved Changes Verification
3.5.4 Schedule Reports
3.5.4.1 Activity Report
3.5.4.2 Logic Report
3.5.4.3 Total Float Report
3.5.4.4 Earnings Report
3.5.5 Network Diagram
3.5.5.1 Continuous Flow
3.5.5.2 Project Milestone Dates
3.5.5.3 Critical Path
3.5.5.4 Banding
3.5.5.5 S-Curves
3.6 PERIODIC PROGRESS MEETINGS
3.6.1 Meeting Attendance
3.6.2 Update Submission Following Progress Meeting
3.6.3 Progress Meeting Contents
3.6.3.1 Start and Finish Dates
3.6.3.2 Time Completion
3.6.3.3 Cost Completion
3.6.3.4 Logic Changes
3.6.3.5 Other Changes
3.7 REQUESTS FOR TIME EXTENSIONS
3.7.1 Justification of Delay
3.7.2 Submission Requirements
3.7.3 Additional Submission Requirements
3.8 DIRECTED CHANGES
3.9 OWNERSHIP OF FLOAT

-- End of Section Table of Contents --

SECTION 01320A

PROJECT SCHEDULE

PART 1 GENERAL

1.1 REFERENCES

The publications listed below form a part of the specification to the extent referenced. The publications are referenced in the text by basic designation only.

U.S. ARMY CORPS OF ENGINEERS (USACE)

ER 1-1-11	(1995) Progress, Schedules, and Network Analysis Systems

1.2 QUALIFICATIONS

The Contractor shall designate an authorized representative who shall be responsible for the preparation of all required project schedule reports.

PART 2 PRODUCTS (Not Applicable)

PART 3 EXECUTION

3.1 GENERAL REQUIREMENTS

Pursuant to the Contract Clause, SCHEDULE FOR CONSTRUCTION CONTRACTS, a Project Schedule as described below shall be prepared. The scheduling of construction shall be the responsibility of the Contractor. Contractor management personnel shall actively participate in its development. Subcontractors and suppliers working on the project shall also contribute in developing and maintaining an accurate Project Schedule. The approved Project Schedule shall be used to measure the progress of the work, to aid in evaluating time extensions, and to provide the basis of all progress payments.

3.2 BASIS FOR PAYMENT

The schedule shall be the basis for measuring Contractor progress. Lack of an approved schedule or scheduling personnel will result in an inability of the Contracting Officer to evaluate Contractor's progress for the purposes of payment. Failure of the Contractor to provide all information, as specified below, shall result in the disapproval of the entire Project Schedule submission and the inability of the Contracting Officer to evaluate Contractor progress for payment purposes. In the case where Project Schedule revisions have been directed by the Contracting Officer and those revisions have not been included in the Project Schedule, the Contracting Officer may hold retainage up to the maximum allowed by

contract, each payment period, until revisions to the Project Schedule have been made.

3.3 PROJECT SCHEDULE

The computer software system utilized by the Contractor to produce the Project Schedule shall be capable of providing all requirements of this specification. Failure of the Contractor to meet the requirements of this specification shall result in the disapproval of the schedule. Manual methods used to produce any required information shall require approval by the Contracting Officer.

3.3.1 Use of the Critical Path Method

The Critical Path Method (CPM) of network calculation shall be used to generate the Project Schedule. The Contractor shall provide the Project Schedule in the Precedence Diagram Method (PDM).

3.3.2 Level of Detail Required

The Project Schedule shall include an appropriate level of detail. Failure to develop or update the Project Schedule or provide data to the Contracting Officer at the appropriate level of detail, as specified by the Contracting Officer, shall result in the disapproval of the schedule. The Contracting Officer will use, but is not limited to, the following conditions to determine the appropriate level of detail to be used in the Project Schedule:

3.3.2.1 Activity Durations

Contractor submissions shall follow the direction of the Contracting Officer regarding reasonable activity durations. Reasonable durations are those that allow the progress of activities to be accurately determined between payment periods (usually less than 2 percent of all non-procurement activities' Original Durations are greater than 20 days).

3.3.2.2 Procurement Activities

Tasks related to the procurement of long lead materials or equipment shall be included as separate activities in the project schedule. Long lead materials and equipment are those materials that have a procurement cycle of over 90 days. Examples of procurement process activities include, but are not limited to: submittals, approvals, procurement, fabrication, and delivery.

3.3.2.3 Critical Activities

The following activities shall be listed as separate line activities on the Contractor's project schedule:

b. Submission and approval of O & M manuals.

c. Submission and approval of as-built drawings.

f. Submission of TAB specialist design review report.

k. Controls testing plan.

l. Controls testing.

n. Other systems testing, if required.

o. Prefinal inspection.

p. Correction of punchlist from prefinal inspection.

q. Final inspection.

3.3.2.4 Government Activities

Government and other agency activities that could impact progress shall be shown. These activities include, but are not limited to: approvals, inspections, utility tie-in, Government Furnished Equipment (GFE) and Notice to Proceed (NTP) for phasing requirements.

3.3.2.5 Responsibility

All activities shall be identified in the project schedule by the party responsible to perform the work. Responsibility includes, but is not limited to, the subcontracting firm, contractor work force, or government agency performing a given task. Activities shall not belong to more than one responsible party. The responsible party for each activity shall be identified by the Responsibility Code.

3.3.2.6 Work Areas

All activities shall be identified in the project schedule by the work area in which the activity occurs. Activities shall not be allowed to cover more than one work area. The work area of each activity shall be identified by the Work Area Code.

3.3.2.7 Modification or Claim Number

Any activity that is added or changed by contract modification or used to justify claimed time shall be identified by a mod or claim code that changed the activity. Activities shall not belong to more than one modification or claim item. The modification or claim number of each activity shall be identified by the Mod or Claim Number. Whenever possible, changes shall be added to the schedule by adding new activities. Existing activities shall not normally be changed to reflect modifications.

3.3.2.8 Bid Item

All activities shall be identified in the project schedule by the Bid Item to which the activity belongs. An activity shall not contain work in more than one bid item. The bid item for each appropriate activity shall be identified by the Bid Item Code.

3.3.2.9 Phase of Work

All activities shall be identified in the project schedule by the phases of work in which the activity occurs. Activities shall not contain work in more than one phase of work. The project phase of each activity shall be by the unique Phase of Work Code.

3.3.2.10 Category of Work

All Activities shall be identified in the project schedule according to the category of work which best describes the activity. Category of work refers, but is not limited, to the procurement chain of activities including such items as submittals, approvals, procurement, fabrication, delivery, installation, start-up, and testing. The category of work for each activity shall be identified by the Category of Work Code.

3.3.2.11 Feature of Work

All activities shall be identified in the project schedule according to the feature of work to which the activity belongs. Feature of work refers, but is not limited to, a work breakdown structure for the project. The feature of work for each activity shall be identified by the Feature of Work Code.

3.3.3 Scheduled Project Completion

The schedule interval shall extend from NTP to the contract completion date.

3.3.3.1 Project Start Date

The schedule shall start no earlier than the date on which the NTP was acknowledged. The Contractor shall include as the first activity in the project schedule an activity called "Start Project". The "Start Project" activity shall have an "ES" constraint date equal to the date that the NTP was acknowledged, and a zero day duration.

3.3.3.2 Constraint of Last Activity

Completion of the last activity in the schedule shall be constrained by the contract completion date. Calculation on project updates shall be such that if the early finish of the last activity falls after the contract completion date, then the float calculation shall reflect a negative float on the critical path. The Contractor shall include as the last activity in the project schedule an activity called "End Project". The "End Project" activity shall have an "LF" constraint date equal to the completion date for the project, and a zero day duration.

3.3.3.3 Early Project Completion

In the event the project schedule shows completion of the project prior to the contract completion date, the Contractor shall identify those activities that have been accelerated and/or those activities that are scheduled in parallel to support the Contractor's "early" completion. Contractor shall specifically address each of the activities noted in the

narrative report at every project schedule update period to assist the Contracting Officer in evaluating the Contractor's ability to actually complete prior to the contract period.

3.3.4 Interim Completion Dates

Contractually specified interim completion dates shall also be constrained to show negative float if the early finish date of the last activity in that phase falls after the interim completion date.

3.3.4.1 Start Phase

The Contractor shall include as the first activity for a project phase an activity called "Start Phase X" where "X" refers to the phase of work. The "Start Phase X" activity shall have an "ES" constraint date equal to the date on which the NTP was acknowledged, and a zero day duration.

3.3.4.2 End Phase

The Contractor shall include as the last activity in a project phase an activity called "End Phase X" where "X" refers to the phase of work. The "End Phase X" activity shall have an "LF" constraint date equal to the completion date for the project, and a zero day duration.

3.3.4.3 Phase X

The Contractor shall include a hammock type activity for each project phase called "Phase X" where "X" refers to the phase of work. The "Phase X" activity shall be logically tied to the earliest and latest activities in the phase.

3.3.5 Default Progress Data Disallowed

Actual Start and Finish dates shall not be automatically updated by default mechanisms that may be included in CPM scheduling software systems. Actual Start and Finish dates on the CPM schedule shall match those dates provided from Contractor Quality Control Reports. Failure of the Contractor to document the Actual Start and Finish dates on the Daily Quality Control report for every in-progress or completed activity, and failure to ensure that the data contained on the Daily Quality Control reports is the sole basis for schedule updating shall result in the disapproval of the Contractor's schedule and the inability of the Contracting Officer to evaluate Contractor progress for payment purposes. Updating of the percent complete and the remaining duration of any activity shall be independent functions. Program features which calculate one of these parameters from the other shall be disabled.

3.3.6 Out-of-Sequence Progress

Activities that have posted progress without all preceding logic being satisfied (Out-of-Sequence Progress) will be allowed only on a case-by-case approval of the Contracting Officer. The Contractor shall propose logic corrections to eliminate all out of sequence progress or justify not changing the sequencing for approval prior to submitting an updated project

schedule.

3.3.7 Negative Lags

Lag durations contained in the project schedule shall not have a negative value.

3.4 PROJECT SCHEDULE SUBMISSIONS

The Contractor shall provide the submissions as described below. The data disk, reports, and network diagrams required for each submission are contained in paragraph SUBMISSION REQUIREMENTS.

3.4.1 Preliminary Project Schedule Submission

The Preliminary Project Schedule, defining the Contractor's planned operations for the first 60 calendar days shall be submitted for approval within 20 calendar days after the NTP is acknowledged. The approved preliminary schedule shall be used for payment purposes not to exceed 60 calendar days after NTP.

3.4.2 Initial Project Schedule Submission

The Initial Project Schedule shall be submitted for approval within 40 calendar days after NTP. The schedule shall provide a reasonable sequence of activities which represent work through the entire project and shall be at a reasonable level of detail.

3.4.3 Periodic Schedule Updates

Based on the result of progress meetings, specified in "Periodic Progress Meetings," the Contractor shall submit periodic schedule updates. These submissions shall enable the Contracting Officer to assess Contractor's progress. If the Contractor fails or refuses to furnish the information and project schedule data, which in the judgement of the Contracting Officer or authorized representative is necessary for verifying the Contractor's progress, the Contractor shall be deemed not to have provided an estimate upon which progress payment may be made.

3.4.4 Standard Activity Coding Dictionary

The Contractor shall use the activity coding structure defined in the Standard Data Exchange Format (SDEF) in ER 1-1-11, Appendix A. This exact structure is mandatory, even if some fields are not used.

3.5 SUBMISSION REQUIREMENTS

The following items shall be submitted by the Contractor for the preliminary submission, initial submission, and every periodic project schedule update throughout the life of the project:

3.5.1 Data Disks

Two data disks containing the project schedule shall be provided. Data on

the disks shall adhere to the SDEF format specified in ER 1-1-11, Appendix A.

3.5.1.1 File Medium

Required data shall be submitted on 3.5 disks, formatted to hold 1.44 MB of data, under the MS-DOS Version 5. or 6.x, unless otherwise approved by the Contracting Officer.

3.5.1.2 Disk Label

A permanent exterior label shall be affixed to each disk submitted. The label shall indicate the type of schedule (Preliminary, Initial, Update, or Change), full contract number, project name, project location, data date, name and telephone number or person responsible for the schedule, and the MS-DOS version used to format the disk.

3.5.1.3 File Name

Each file submitted shall have a name related to either the schedule data date, project name, or contract number. The Contractor shall develop a naming convention that will ensure that the names of the files submitted are unique. The Contractor shall submit the file naming convention to the Contracting Officer for approval.

3.5.2 Narrative Report

A Narrative Report shall be provided with the preliminary, initial, and each update of the project schedule. This report shall be provided as the basis of the Contractor's progress payment request. The Narrative Report shall include: a description of activities along the 2 most critical paths, a description of current and anticipated problem areas or delaying factors and their impact, and an explanation of corrective actions taken or required to be taken. The narrative report is expected to relay to the Government, the Contractor's thorough analysis of the schedule output and its plans to compensate for any problems, either current or potential, which are revealed through that analysis.

3.5.3 Approved Changes Verification

Only project schedule changes that have been previously approved by the Contracting Officer shall be included in the schedule submission. The Narrative Report shall specifically reference, on an activity by activity basis, all changes made since the previous period and relate each change to documented, approved schedule changes.

3.5.4 Schedule Reports

The format for each activity for the schedule reports listed below shall contain: Activity Numbers, Activity Description, Original Duration, Remaining Duration, Early Start Date, Early Finish Date, Late Start Date, Late Finish Date, Total Float. Actual Start and Actual Finish Dates shall be printed for those activities in progress or completed.

3.5.4.1 Activity Report

A list of all activities sorted according to activity number.

3.5.4.2 Logic Report

A list of Preceding and Succeeding activities for every activity in ascending order by activity number. Preceeding and succeeding activities shall include all information listed above in paragraph Schedule Reports. A blank line shall be left between each activity grouping.

3.5.4.3 Total Float Report

A list of all incomplete activities sorted in ascending order of total float. Activities which have the same amount of total float shall be listed in ascending order of Early Start Dates. Completed activities shall not be shown on this report.

3.5.4.4 Earnings Report

A compilation of the Contractor's Total Earnings on the project from the NTP until the most recent Monthly Progress Meeting. This report shall reflect the Earnings of specific activities based on the agreements made in the field and approved between the Contractor and Contracting Officer at the most recent Monthly Progress Meeting. Provided that the Contractor has provided a complete schedule update, this report shall serve as the basis of determining Contractor Payment. Activities shall be grouped by bid item and sorted by activity numbers. This report shall: sum all activities in a bid item and provide a bid item percent; and complete and sum all bid items to provide a total project percent complete. The printed report shall contain, for each activity: the Activity Number, Activity Description, Original Budgeted Amount, Total Quantity, Quantity to Date, Percent Complete (based on cost), and Earnings to Date.

3.5.5 Network Diagram

The network diagram shall be required on the initial schedule submission and on monthly schedule update submissions. The network diagram shall depict and display the order and interdependence of activities and the sequence in which the work is to be accomplished. The Contracting Officer will use, but is not limited to, the following conditions to review compliance with this paragraph:

3.5.5.1 Continuous Flow

Diagrams shall show a continuous flow from left to right with no arrows from right to left. The activity number, description, duration, and estimated earned value shall be shown on the diagram.

3.5.5.2 Project Milestone Dates

Dates shall be shown on the diagram for start of project, any contract required interim completion dates, and contract completion dates.

3.5.5.3 Critical Path

The critical path shall be clearly shown.

3.5.5.4 Banding

Activities shall be grouped to assist in the understanding of the activity sequence. Typically, this flow will group activities by category of work, work area and/or responsibility.

3.5.5.5 S-Curves

Earnings curves showing projected early and late earnings and earnings to date.

3.6 PERIODIC PROGRESS MEETINGS

Progress meetings to discuss payment shall include a monthly onsite meeting or other regular intervals mutually agreed to at the preconstruction conference. During this meeting the Contractor shall describe, on an activity by activity basis, all proposed revisions and adjustments to the project schedule required to reflect the current status of the project. The Contracting Officer will approve activity progress, proposed revisions, and adjustments as appropriate.

3.6.1 Meeting Attendance

The Contractor's Project Manager and Scheduler shall attend the regular progress meeting.

3.6.2 Update Submission Following Progress Meeting

A complete update of the project schedule containing all approved progress, revisions, and adjustments, based on the regular progress meeting, shall be submitted not later than 4 working days after the monthly progress meeting.

3.6.3 Progress Meeting Contents

Update information, including Actual Start Dates, Actual Finish Dates, Remaining Durations, and Cost-to-Date shall be subject to the approval of the Contracting Officer. As a minimum, the Contractor shall address the following items on an activity by activity basis during each progress meeting.

3.6.3.1 Start and Finish Dates

The Actual Start and Actual Finish dates for each activity currently in-progress or completed .

3.6.3.2 Time Completion

The estimated Remaining Duration for each activity in-progress. Time-based progress calculations shall be based on Remaining Duration for each activity.

3.6.3.3 Cost Completion

The earnings for each activity started. Payment will be based on earnings for each in-progress or completed activity. Payment for individual activities will not be made for work that contains quality defects. A portion of the overall project amount may be retained based on delays of activities.

3.6.3.4 Logic Changes

All logic changes pertaining to NTP on change orders, change orders to be incorporated into the schedule, contractor proposed changes in work sequence, corrections to schedule logic for out-of-sequence progress, lag durations, and other changes that have been made pursuant to contract provisions shall be specifically identified and discussed.

3.6.3.5 Other Changes

Other changes required due to delays in completion of any activity or group of activities include: 1) delays beyond the Contractor's control, such as strikes and unusual weather. 2) delays encountered due to submittals, Government Activities, deliveries or work stoppages which make re-planning the work necessary. 3) Changes required to correct a schedule which does not represent the actual or planned prosecution and progress of the work.

3.7 REQUESTS FOR TIME EXTENSIONS

In the event the Contractor requests an extension of the contract completion date, or any interim milestone date, the Contractor shall furnish the following for a determination as to whether or not the Contractor is entitled to an extension of time under the provisions of the contract: justification, project schedule data, and supporting evidence as the Contracting Officer may deem necessary. Submission of proof of delay, based on revised activity logic, duration, and costs (updated to the specific date that the delay occurred) is obligatory to any approvals.

3.7.1 Justification of Delay

The project schedule shall clearly display that the Contractor has used, in full, all the float time available for the work involved with this request. The Contracting Officer's determination as to the number of allowable days of contract extension shall be based upon the project schedule updates in effect for the time period in question, and other factual information. Actual delays that are found to be caused by the Contractor's own actions, which result in the extension of the schedule, will not be a cause for a time extension to the contract completion date.

3.7.2 Submission Requirements

The Contractor shall submit a justification for each request for a change in the contract completion date of under 2 weeks based upon the most recent schedule update at the time of the NTP or constructive direction issued for the change. Such a request shall be in accordance with the requirements of

other appropriate Contract Clauses and shall include, as a minimum:

a. A list of affected activities, with their associated project schedule activity number.

b. A brief explanation of the causes of the change.

c. An analysis of the overall impact of the changes proposed.

d. A sub-network of the affected area.

Activities impacted in each justification for change shall be identified by a unique activity code contained in the required data file.

3.7.3 Additional Submission Requirements

For any requested time extension of over 2 weeks, the Contracting Officer may request an interim update with revised activities for a specific change request. The Contractor shall provide this disk within 4 days of the Contracting Officer's request.

3.8 DIRECTED CHANGES

If the NTP is issued for changes prior to settlement of price and/or time, the Contractor shall submit proposed schedule revisions to the Contracting Officer within 2 weeks of the NTP being issued. The proposed revisions to the schedule will be approved by the Contracting Officer prior to inclusion of those changes within the project schedule. If the Contractor fails to submit the proposed revisions, the Contracting Officer may furnish the Contractor with suggested revisions to the project schedule. The Contractor shall include these revisions in the project schedule until revisions are submitted, and final changes and impacts have been negotiated. If the Contractor has any objections to the revisions furnished by the Contracting Officer, the Contractor shall advise the Contracting Officer within 2 weeks of receipt of the revisions. Regardless of the objections, the Contractor shall continue to update the schedule with the Contracting Officer's revisions until a mutual agreement in the revisions is reached. If the Contractor fails to submit alternative revisions within 2 weeks of receipt of the Contracting Officer's proposed revisions, the Contractor will be deemed to have concurred with the Contracting Officer's proposed revisions. The proposed revisions will then be the basis for an equitable adjustment for performance of the work.

3.9 OWNERSHIP OF FLOAT

Float available in the schedule, at any time, shall not be considered for the exclusive use of either the Government or the Contractor.

-- End of Section --

This page was intentionally left blank for duplex printing.

SECTION TABLE OF CONTENTS

DIVISION 01 - GENERAL REQUIREMENTS

SECTION 01330

SUBMITTAL PROCEDURES

PART 1 GENERAL

1.1 DEFINITIONS
1.1.1 Submittal
1.2 TYPES OF SUBMITTALS
1.2.1 Types of Submittals
1.3 SUBMITTAL IDENTIFICATION (SD)
1.4 SUBMITTAL REGISTER
1.4.1 Submittal Register
1.4.2 Copies Delivered to the Government
1.5 FORMAT OF SUBMITTALS
1.5.1 Transmittal Form
1.5.2 Identifying Submittals
1.5.3 Format for Submittals
1.6 QUANTITY OF SUBMITTALS
1.6.1 Number of Copies of Shop Drawings
1.6.2 Number of Copies of Product Data
1.6.3 Number of Samples
1.6.4 Number of Copies of Operation and Maintenance Data
1.6.5 Number of Copies of Administrative Submittals
1.7 APPROVED SUBMITTALS
1.8 DISAPPROVED SUBMITTALS
1.9 WITHHOLDING OF PAYMENT
1.10 GENERAL
1.11 SUBMITTAL REGISTER
1.12 SCHEDULING
1.13 TRANSMITTAL FORM (ENG FORM 4025)
1.14 SUBMITTAL PROCEDURES
1.14.1 Procedures
1.14.2 Deviations
1.15 CONTROL OF SUBMITTALS
1.16 GOVERNMENT APPROVED SUBMITTALS
1.17 INFORMATION ONLY SUBMITTALS
1.18 STAMPS

PART 2 PRODUCTS

PART 3 EXECUTION

-- End of Section Table of Contents --

SECTION 01330

SUBMITTAL PROCEDURES

PART 1 GENERAL

1.1 DEFINITIONS

1.1.1 Submittal

Shop drawings, product data, samples, operation and maintenance data,and administrative submittals presented for review and approval. Contract Clauses "FAR 52.236-5, Material and Workmanship," paragraph (b) and "FAR 52.236-21, Specifications and Drawings for Construction," paragraphs (d), (e), and (f) apply to all "submittals."

1.2 TYPES OF SUBMITTALS

1.2.1 Types of Submittals

All submittals are classified as indicated in paragraph "Submittal Descriptions (SD)". Submittals also are grouped as follows:

a. Shop drawings: As used in this section, drawings, schedules, diagrams, and other data prepared specifically for this contract, by contractor or through contractor by way of subcontractor, manufacturer, supplier, distributor, or other lower tier contractor, to illustrate portion of work.

b. Product data: Preprinted material such as illustrations, standard schedules, performance charts, instructions, brochures, diagrams, manufacturer's descriptive literature, catalog data, and other data to illustrate portion of work, but not prepared exclusively for this contract.

c. Samples: Physical examples of products, materials, equipment, assemblies, or workmanship that are physically identical to portion of work, illustrating portion of work or establishing standards for evaluating appearance of finished work or both.

d. Operation and Maintenance (O&M) Data:
Data that is furnished by the manufacturer, or the system provider, to the equipment operating and maintenance personnel. This data is needed by operating and maintenance personnel for the safe and efficient operation, maintenance and repair of the item. The data is required when the item is delivered to the project site.

e. Administrative submittals: Data presented for reviews and approval to ensure that administrative requirements of project are adequately met but not to ensure directly that work is in

accordance with design concept and in compliance with contract documents.

1.3 SUBMITTAL IDENTIFICATION (SD)

Submittals required are identified by SD numbers and titles as follows:

SD-01 Preconstruction Submittals

Certificates of insurance.
Surety bonds.
List of proposed subcontractors.
List of proposed products.
Construction Progress Schedule.
Submittal register.
Schedule of values.
Health and safety plan.
Work plan.
Quality control plan.
Environmental protection plan.

SD-02 Shop Drawings

Submit shop drawings as required by the individual specification sections.

SD-03 Product Data

Submit product data as required by the individual specification sections.

SD-04 Samples

Submit samples as required by the individual specification sections.

SD-05 Design Data

Submit design data as required by the individual specification sections.

SD-06 Test Reports

Submit test reports as required by the individual specification sections.

SD-07 Certificates

Submit certificates as required by the individual specification sections.

SD-08 Manufacturer's Instructions

Submit manufacturer's instructions as required by the individual specification sections.

SD-09 Manufacturer's Field Reports

Documentation of the testing and verification actions taken by manufacturer's representative to confirm compliance with manufacturer's standards or instructions.

Factory test reports.

SD-10 Operation and Maintenance Data

Submit Operations and Maintenance Data as required by the individual specification sections.

SD-11 Closeout Submittals

Submit close-out submittals as required by the individual specification sections.

1.4 SUBMITTAL REGISTER

1.4.1 Submittal Register

Submit submittal register as an electronic database, using submittals management program furnished to Contractor. Submit with quality control plan and project schedule.

1.4.2 Copies Delivered to the Government

Deliver one copy of submitted register updated by contractor to government with each invoice request. Deliver in electronic format, unless a paper copy is requested by Contracting Officer.

1.5 FORMAT OF SUBMITTALS

1.5.1 Transmittal Form

Transmit each submittal, except sample installations and sample panels, to office of approving authority. Transmit submittals with transmittal form prescribed by Contracting Officer and standard for project. The transmittal form shall identify Contractor, indicate date of submittal, and include information prescribed by transmittal form and required in paragraph entitled "Identifying Submittals." Process transmittal forms to record actions regarding sample panels and sample installations.

1.5.2 Identifying Submittals

Identify submittals, except sample panel and sample installation, with the following information permanently adhered to or noted on each separate component of each submittal and noted on transmittal form. Mark each copy

of each submittal identically, with the following:

a. Project title and location.

b. Construction contract number.

c. Section number of the specification section by which submittal is required.

d. Submittal description (SD) number of each component of submittal.

e. When a resubmission, add alphabetic suffix on submittal description, for example, SD-10A, to indicate resubmission.

f. Name, address, and telephone number of subcontractor, supplier, manufacturer and any other second tier contractor associated with submittal.

g. Product identification and location in project.

1.5.3 Format for Submittals

a. Shop drawings, product data, samples, manufacturer's instructions, field reports, O&M data, close-out data, and administrative submittals shall be submitted in a format acceptable to the Contracting Officer.

1.6 QUANTITY OF SUBMITTALS

1.6.1 Number of Copies of Shop Drawings

a. Submit six copies of submittals of shop drawings.

1.6.2 Number of Copies of Product Data

a. Submit six copies of submittals of product data.

1.6.3 Number of Samples

a. Submit two samples, or two sets of samples showing range of variation, of each required item. One approved sample or set of samples will be retained by approving authority and one will be returned to contractor.

b. Submit one sample panel. Include components listed in technical section or as directed.

c. Submit one sample installation, where directed.

d. Submit one sample of non-solid materials.

1.6.4 Number of Copies of Operation and Maintenance Data

a. Submit three copies of O&M data.

1.6.5 Number of Copies of Administrative Submittals

a. Submit six copies of administrative submittals.

1.7 APPROVED SUBMITTALS

The Contracting Officer's approval of submittals shall not be construed as a complete check, but will indicate only that the general method of construction, materials, detailing and other information are satisfactory. Approval will not relieve the Contractor of the responsibility for any error which may exist, as the Contractor under the Contractor Quality Control (CQC) requirements of this contract is responsible for dimensions, the design of adequate connections and details, and the satisfactory construction of all work. After submittals have been approved by the Contracting Officer, no resubmittal for the purpose of substituting materials or equipment will be considered unless accompanied by an explanation of why a substitution is necessary.

1.8 DISAPPROVED SUBMITTALS

The Contractor shall make all corrections required by the Contracting Officer and promptly furnish a corrected submittal in the form and number of copies specified for the initial submittal. If the Contractor considers any correction indicated on the submittals to constitute a change to the contract, a notice in accordance with the Contract Clause "Changes" shall be given promptly to the Contracting Officer.

1.9 WITHHOLDING OF PAYMENT

Payment for materials incorporated in the work will not be made if required approvals have not been obtained.

1.10 GENERAL

The Contractor shall make submittals as required by the specifications. The Contracting Officer may request submittals in addition to those specified when deemed necessary to adequately describe the work covered in the respective sections. Units of weights and measures used on all submittals shall be the same as those used in the contract drawings. Each submittal shall be complete and in sufficient detail to allow ready determination of compliance with contract requirements. Prior to submittal, all items shall be checked and approved by the Contractor's Quality Control (CQC) System Manager and each item shall be stamped, signed, and dated by the CQC System Manager indicating action taken. Proposed deviations from the contract requirements shall be clearly identified. Submittals shall include items such as: Contractor's, manufacturer's, or fabricator's drawings; descriptive literature including (but not limited to) catalog cuts, diagrams, operating charts or curves; test reports; test cylinders; samples; O&M manuals (including parts list); certifications; warranties; and other such required submittals. Submittals requiring Government approval shall be scheduled and made prior to the acquisition of the material or equipment covered thereby. Samples

remaining upon completion of the work shall be picked up and disposed of in accordance with manufacturer's Material Safety Data Sheets (MSDS) and in compliance with existing laws and regulations.

1.11 SUBMITTAL REGISTER

At the end of this section is a submittal register showing items of equipment and materials for which submittals are required by the specifications; this list may not be all inclusive and additional submittals may be required. The Contractor shall maintain a submittal register for the project in accordance with Section 01312A QUALITY CONTROL SYSTEM (QCS).The Government will provide the initial submittal register in electronic format. Thereafter, the Contractor shall maintain a complete list of all submittals, including completion of all data columns. Dates on which submittals are received and returned by the Government will be included in its export file to the Contractor. The Contractor shall track all submittals.]

1.12 SCHEDULING

Submittals covering component items forming a system or items that are interrelated shall be scheduled to be coordinated and submitted concurrently. Certifications to be submitted with the pertinent drawings shall be so scheduled. Adequate time (a minimum of 30 calendar days exclusive of mailing time) shall be allowed and shown on the register for review and approval. No delay damages or time extensions will be allowed for time lost in late submittals.

1.13 TRANSMITTAL FORM (ENG FORM 4025)

The sample transmittal form (ENG Form 4025) attached to this section shall be used for submitting both Government approved and information only submittals in accordance with the instructions on the reverse side of the form. These forms will be furnished to the Contractor. This form shall be properly completed by filling out all the heading blank spaces and identifying each item submitted. Special care shall be exercised to ensure proper listing of the specification paragraph and/or sheet number of the contract drawings pertinent to the data submitted for each item.

1.14 SUBMITTAL PROCEDURES

Submittals shall be made as follows:

1.14.1 Procedures

Submittals may be hand delivered, mailed, transmitted via courier, or electronically transmitted to the Contracting Officer as appropriate for the individual submittal .

1.14.2 Deviations

For submittals which include proposed deviations requested by the Contractor, the column "variation" of ENG Form 4025 shall be checked. The Contractor shall set forth in writing the reason for any deviations and

annotate such deviations on the submittal. The Government reserves the right to rescind inadvertent approval of submittals containing unnoted deviations.

1.15 CONTROL OF SUBMITTALS

The Contractor shall carefully control his procurement operations to ensure that each individual submittal is made on or before the Contractor scheduled submittal date shown on the approved "Submittal Register."

1.16 GOVERNMENT APPROVED SUBMITTALS

Upon completion of review of submittals requiring Government approval, the submittals will be identified as having received approval by being so stamped and dated. Five (5) copies of the submittal will be retained by the Contracting Officer and one (1) copy of the submittal will be returned to the Contractor.

1.17 INFORMATION ONLY SUBMITTALS

Normally submittals for information only will not be returned. Approval of the Contracting Officer is not required on information only submittals. The Government reserves the right to require the Contractor to resubmit any item found not to comply with the contract. This does not relieve the Contractor from the obligation to furnish material conforming to the plans and specifications; will not prevent the Contracting Officer from requiring removal and replacement of nonconforming material incorporated in the work; and does not relieve the Contractor of the requirement to furnish samples for testing by the Government laboratory or for check testing by the Government in those instances where the technical specifications so prescribe.

1.18 STAMPS

Stamps used by the Contractor on the submittal data to certify that the submittal meets contract requirements shall be similar to the following:

CONTRACTOR

(Firm Name)

_____ Approved

_____ Approved with corrections as noted on submittal data and/or attached sheets(s).

SIGNATURE: _____

TITLE: _____

DATE: _____

PART 2 PRODUCTS

Not used.

PART 3 EXECUTION

Not used.

-- End of Section --

This page was intentionally left blank for duplex printing.

SUBMITTAL REGISTER

CONTRACT NO.
DACW09-03-B-0001

TITLE AND LOCATION
RIO SALADO, TEMPE (INDIAN BEND WASH)

CONTRACTOR

ACTIVITY NO	TRANSMITTAL NO	SPEC SECT	DESCRIPTION ITEM SUBMITTED	PARAGRAPH #	CLASSIFICATION	GOVT OR A/E REVWR	CONTRACTOR: SCHEDULE DATES SUBMIT	APPROVAL NEEDED BY	MATERIAL NEEDED BY	CONTRACTOR ACTION ACTION CODE	DATE OF ACTION	DATE FWD TO APPR AUTH/ DATE RCD FROM CONTR	APPROVING AUTHORITY DATE FWD TO OTHER REVIEWER	DATE RCD FROM OTH REVIEWER	ACTION CODE	DATE OF ACTION	MAILED TO CONTR/ DATE RCD FRM APPR AUTH	REMARKS
(a)	(b)	(c)	(d)	(e)	(f)		(g)	(h)	(i)	(j)	(k)	(l)	(m)	(n)	(o)	(p)	(q)	(r)
		01200	SD-01 Preconstruction Submittals															
			Site Specific Safety and Health Plan	1.3.1	G													
			Activity Hazards Safety Analysis	1.3.3	G													
		01351A	SD-03 Product Data															
			HAZWOPER Qualifications Certificates	1.4	G													
		01355A	SD-01 Preconstruction Submittals															
			Environmental Protection Plan	1.7	G													
		01356A	SD-07 Certificates															
			Mill Certificate or Affidavit	2.1.3	G													
		01702	SD-11 Closeout Submittals															
			Submittal of the As-Built Field Data	3.1.2.1	G													
		02300a	SD-06 Test Reports															
			Testing	3.10														
			SD-07 Certificates															
			Testing	3.10														
		02316a	SD-06 Test Reports															
			Field Density Tests	3.4.3														
			Testing of Backfill Materials	3.4.2														
		02510a	SD-03 Product Data															
			Installation	3.3														
			Waste Water Disposal Method	3.1														
			Satisfactory Installation	3.2														
		02722a	SD-03 Product Data															

SUBMITTAL REGISTER

CONTRACT NO.
DACW09-03-B-0001

TITLE AND LOCATION
RIO SALADO, TEMPE (INDIAN BEND WASH)

CONTRACTOR

ACTIVITY NO (a)	TRANSMITTAL NO (b)	SPEC SECT (c)	DESCRIPTION ITEM SUBMITTED (d)	PARAGRAPH # (e)	CLASSIFICATION (f)	GOVT A/E REVWR	CONTRACTOR: SCHEDULE DATES SUBMIT (g)	APPROVAL NEEDED BY (h)	MATERIAL NEEDED BY (i)	CONTRACTOR ACTION ACTION CODE (j)	DATE OF ACTION (k)	DATE FWD TO APPR AUTH/ DATE RCD FROM CONTR (l)	APPROVING AUTHORITY DATE FWD TO OTHER REVIEWER (m)	DATE RCD FROM OTH REVIEWER (n)	ACTION CODE (o)	DATE OF ACTION (p)	MAILED TO CONTR/ DATE RCD FRM APPR AUTH (q)	REMARKS (r)
		02722a	Plant, Equipment, and Tools	1.7														
			Waybills and Delivery Tickets	2.1														
			SD-06 Test Reports															
			Sampling and testing	1.5														
			Field Density Tests	1.5.2.4														
		02741a	SD-03 Product Data															
			Mix Design	2.3	G													
			Contractor Quality Control	3.9	G													
			Material Acceptance and Percent	3.10	G													
			Payment															
			SD-07 Certificates															
			Asphalt Cement Binder	2.2	G													
			Testing Laboratory	3.5														
		02761N	SD-03 Product Data															
			Paints for roads and streets	1.3														
		02770a	SD-03 Product Data															
			Concrete	1.4														
			SD-06 Test Reports															
			Field Quality Control	3.8														
		02811a	SD-02 Shop Drawings															
			Irrigation Control System Shop	2.2	G													
			Drawings															
			SD-03 Product Data															
			Product Specification Sheets	2.4	G													
			Field Training	3.4	G													
			Spare Parts	2.1	G	G												

SUBMITTAL REGISTER

CONTRACT NO.
DACW09-03-B-0001

TITLE AND LOCATION
RIO SALADO, TEMPE (INDIAN BEND WASH)

CONTRACTOR

ACTIVITY NO (a)	TRANSMITTAL NO (b)	SPEC SECT (c)	DESCRIPTION ITEM SUBMITTED (d)	PARAGRAPH # (e)	CLASSIFICATION (f)	GOVT OR A/E REVWR	CONTRACTOR: SCHEDULE DATES SUBMIT (g)	APPROVAL NEEDED BY (h)	MATERIAL NEEDED BY (i)	CONTRACTOR ACTION ACTION CODE (j)	DATE OF ACTION (k)	DATE FWD TO APPR AUTH/ DATE RCD FROM CONTR (l)	APPROVING AUTHORITY DATE FWD TO OTHER REVIEWER (m)	DATE RCD FROM OTH REVIEWER (n)	ACTION CODE (o)	DATE OF ACTION (p)	MAILED TO CONTR/ DATE RCD FRM APPR AUTH (q)	REMARKS (r)
		02811a	SD-06 Test Reports															
			Mainline Pipe Pressure Test	2.3	G													
			Reports															
			SD-10 Operation and Maintenance															
			Data															
			Irrigation System	1.3	G													
		02832	SD-02 Shop Drawings															
			Shop Drawings	1.4.1	G													
			SD-03 Product Data															
			Manufacturer's Data	2.1	G													
			Calculations	1.4.2	G													
			SD-04 Samples															
			Segmental Concrete Units	2.2	G													
			Reinforcement	2.3	G													
			SD-07 Certificates															
			Reinforcement	2.3	G													
		02870a	SD-02 Shop Drawings															
			Site Furnishing Standards	2.5	G													
			SD-03 Product Data															
			Site Furnishings	1.4	G													
			Installation	3.1	G													
			Materials	2.1														
			SD-04 Samples															
			Finish	2.4														
			SD-06 Test Reports															
			Testing	3.1.4														

SUBMITTAL REGISTER

CONTRACT NO.
DACW09-03-B-0001

TITLE AND LOCATION
RIO SALADO, TEMPE (INDIAN BEND WASH)

CONTRACTOR

ACTIVITY NO	TRANSMITTAL NO	SPEC SECT	DESCRIPTION ITEM SUBMITTED	PARAGRAPH #	CLASSIFICATION	GOVT OR A/E REVWR	CONTRACTOR: SCHEDULE DATES SUBMIT	APPROVAL NEEDED BY	MATERIAL NEEDED BY	CONTRACTOR ACTION ACTION CODE	DATE OF ACTION	DATE FWD TO APPR AUTH/ DATE RCD FROM CONTR	APPROVING AUTHORITY DATE FWD TO OTHER REVIEWER	DATE RCD FROM OTH REVIEWER	ACTION CODE	DATE OF ACTION	MAILED TO CONTR/ DATE RCD FRM APPR AUTH	REMARKS
(a)	(b)	(c)	(d)	(e)	(f)		(g)	(h)	(i)	(j)	(k)	(l)	(m)	(n)	(o)	(p)	(q)	(r)
		02921a	SD-03 Product Data															
			Quantity Check	3.5	G													
			Maintenance Record	3.9.3.5														
			Application of Pesticide	3.6														
			SD-04 Samples															
			Wood Fiber Mulch	2.1														
			SD-06 Test Reports															
			Equipment Calibration	3.1.3														
			Soil Test	3.1.4														
			SD-07 Certificates															
			Seed	2.2	G													
			Fertilizer	2.3.1	G													
			Mulch	2.4	G													
		02930a	SD-03 Product Data															
			Horticultural Chemical Product	2.1	G													
			Specification Sheets															
			Maintenance Record	3.9.2.6	G													
			Application of Pesticide	2.2	G													
			SD-06 Test Reports															
			Soil Test Report and	2.3	G													
			Recommendations															
			SD-07 Certificates															
			Plant Material	2.5	G													
			Fertilizer	2.7.2	G													
			Organic Soil Conditioner	2.7.3	G													
			Gypsum	2.4	G													

SUBMITTAL REGISTER

CONTRACT NO.
DACW09-03-B-0001

TITLE AND LOCATION
RIO SALADO, TEMPE (INDIAN BEND WASH)

CONTRACTOR

ACTIVITY NO	TRANSMITTAL NO	SPEC SECT	DESCRIPTION ITEM SUBMITTED	PARAGRAPH #	CLASSIFICATION	GOVT OR A/E REVWR	CONTRACTOR: SCHEDULE DATES SUBMIT	APPROVAL NEEDED BY	MATERIAL NEEDED BY	CONTRACTOR ACTION ACTION CODE	DATE OF ACTION	DATE FWD TO APPR AUTH/ DATE RCD FROM CONTR	APPROVING AUTHORITY DATE FWD TO OTHER REVIEWER	DATE RCD FROM OTH REVIEWER	ACTION CODE	DATE OF ACTION	MAILED TO CONTR/ DATE RCD FRM APPR AUTH	REMARKS
(a)	(b)	(c)	(d)	(e)	(f)		(g)	(h)	(i)	(j)	(k)	(l)	(m)	(n)	(o)	(p)	(q)	(r)
		02930a	Soil Sulfur	2.7.1	G													
			SD-10 Operation and Maintenance															
			Data															
			Maintenance Instructions	3.9.5	G													
		03201	SD-02 Shop Drawings															
			Fabrication and Placement	3.1	G													
			SD-07 Certificates															
			Steel Bars and Welded-Wire	2.1														
			Fabric															
		03307a	SD-03 Product Data															
			Air-Entraining Admixture	2.1														
			Accelerating Admixture	2.1														
			Water-Reducing or Retarding	2.1														
			Admixture															
			Curing Materials	2.1														
			Reinforcing Steel	2.1														
			Expansion Joint Filler Strips.	2.1														
			Pre-molded															
			SD-06 Test Reports															
			Concrete Mixture Proportions	2.1														
			SD-07 Certificates															
			Cementitious Materials	2.1														
			Aggregates	2.1														
		03410N	SD-02 Shop Drawings															
			Drawings of precast members	2.1	G													
			(pump vaults)															

SUBMITTAL REGISTER

CONTRACT NO.
DACW09-03-B-0001

TITLE AND LOCATION
RIO SALADO, TEMPE (INDIAN BEND WASH)

CONTRACTOR

ACTIVITY NO	TRANSMITTAL NO	SPEC SECT	DESCRIPTION ITEM SUBMITTED	PARAGRAPH #	CLASSIFICATION	GOVT OR A/E REVWR	CONTRACTOR: SCHEDULE DATES SUBMIT	APPROVAL NEEDED BY	MATERIAL NEEDED BY	CONTRACTOR ACTION ACTION CODE	DATE OF ACTION	DATE FWD TO APPR AUTH/ DATE RCD FROM CONTR	APPROVING AUTHORITY DATE FWD TO OTHER REVIEWER	DATE RCD FROM OTH REVIEWER	ACTION CODE	DATE OF ACTION	MAILED TO CONTR/ DATE RCD FRM APPR AUTH	REMARKS
(a)	(b)	(c)	(d)	(e)	(f)		(g)	(h)	(i)	(j)	(k)	(l)	(m)	(n)	(o)	(p)	(q)	(r)
		03410N	SD-05 Design Data															
			Design Calculations	1.7.2														
			CONTRACTOR-FURNISHED MIX	2.2														
			DESIGN															
		04200A	SD-04 Samples															
			Concrete Masonry Units (CMU)	2.3	G													
			Anchors, Ties, and Bar	2.8	G													
			Positioners															
			SD-06 Test Reports															
			Field Testing of Mortar and Grout	2.1	G													
			SD-07 Certificates															
			Concrete Masonry Units (CMU)	2.3														
			Mortar Coloring	2.1														
			Mortar Admixtures	2.1														
			Joint Reinforcement	2.9														
		05500a	SD-02 Shop Drawings															
			Metal Rail / Fence at Overlook	1.3.1														
			SD-03 Product Data															
			miscellaneous metal items	1.6														
		11211A	SD-02 Shop Drawings															
			Installation	3.1														
			SD-03 Product Data															
			Materials and Equipment	2.2														
			Instructions	3.5														
			Training Period	3.5														
			SD-06 Test Reports															

SUBMITTAL REGISTER

CONTRACT NO.
DACW09-03-B-0001

TITLE AND LOCATION
RIO SALADO, TEMPE (INDIAN BEND WASH)

CONTRACTOR

ACTIVITY NO	TRANSMITTAL NO	SPEC SECT	DESCRIPTION ITEM SUBMITTED	PARAGRAPH #	CLASSIFICATION	GOVT OR A/E REVWR	CONTRACTOR: SCHEDULE DATES SUBMIT	APPROVAL NEEDED BY	MATERIAL NEEDED BY	CONTRACTOR ACTION CODE	DATE OF ACTION	DATE FWD TO APPR AUTH/ DATE RCD FROM CONTR	APPROVING AUTHORITY DATE FWD TO OTHER REVIEWER	DATE RCD FROM OTH REVIEWER	ACTION CODE	DATE OF ACTION	MAILED TO CONTR/ DATE RCD FRM APPR AUTH	REMARKS
(a)	(b)	(c)	(d)	(e)	(f)		(g)	(h)	(i)	(j)	(k)	(l)	(m)	(n)	(o)	(p)	(q)	(r)
		11211A	Tests	3.2														
			SD-10 Operation and Maintenance															
			Data															
			MANUFACTURER'S	3.4														
			REPRESENTATIVE															
			Centrifugal Pump System	2.1														
		13405A	SD-02 Shop Drawings															
			Installation and	3.2.1														
			Wiring	3.2.1														
			SD-03 Product Data															
			Instrumentation and Control	2.1														
			System															
			Instrumentation and Control	3.1														
			System															
			Meters and Sensors	2.2														
			Training Manual	2.3														
			Performance Verification Test	2.4														
			(PVT)															
			SD-10 Operation and Maintenance															
			Data															
			Instrumentation and Control	2.1														
			System															
			Instrumentation and Control	3.1														
			System															
		16120A	SD-03 Product Data															
			Product Data	2.1	G													

SUBMITTAL REGISTER

CONTRACT NO.
DACW09-03-B-0001

TITLE AND LOCATION
RIO SALADO, TEMPE (INDIAN BEND WASH)

CONTRACTOR

ACTIVITY NO (a)	TRANSMITTAL NO (b)	SPEC SECT (c)	DESCRIPTION ITEM SUBMITTED (d)	PARAGRAPH # (e)	CLASSIFICATION (f)	GOVT A/E REVWR	CONTRACTOR: SCHEDULE DATES SUBMIT (g)	APPROVAL NEEDED BY (h)	MATERIAL NEEDED BY (i)	CONTRACTOR ACTION CODE (j)	DATE OF ACTION (k)	DATE FWD TO APPR AUTH/ DATE RCD FROM CONTR (l)	APPROVING AUTHORITY DATE FWD TO OTHER REVIEWER (m)	DATE RCD FROM OTH REVIEWER (n)	ACTION CODE (o)	DATE OF ACTION (p)	MAILED TO CONTR/ DATE RCD FRM APPR AUTH (q)	REMARKS (r)
		16120A	SD-08 Manufacturer's Instructions															
			INSTALLATION INSTRUCTIONS	2.3	G													
			SD-06 Test Reports															
			TESTS, INSPECTIONS, AND	2.4	G													
			VERIFICATIONS															
		16302N	SD-03 Product Data															
			600 volt wires and cables	2.1.4.1														
			SD-06 Test Reports															
			Acceptance checks and tests	2.1.1	G													
			SD-08 Manufacturer's Instructions															
			Ground megger 'UL listed' kit	1.5.1														
		16403A	SD-02 Shop Drawings															
			Shop Drawings	3.1	G													
			Panelboards	2.1	G													
		16520N	SD-03 Product Data															
			Luminaires	2.2	G													
			Lamps	2.2.1	G													
			Ballasts	2.2.2	G													
			Lighting contactor	2.3	G													
			Time switch	2.4	G													
			SD-06 Test Reports															
			Test Data for Luminaires	1.5.2	G													
			Operating test	3.3	G													

TRANSMITTAL OF SHOP DRAWINGS, EQUIPMENT DATA, MATERIAL SAMPLES, OR MANUFACTURER'S CERTIFICATES OF COMPLIANCE *(Read instructions on the reverse side prior to initiating this form)*	DATE	TRANSMITTAL NO.

SECTION I - REQUEST FOR APPROVAL OF THE FOLLOWING ITEMS *(This section will be initiated by the contractor)*

TO:	FROM:	CONTRACT NO.	CHECK ONE: ☐ THIS IS A NEW TRANSMITTAL ☐ THIS IS A RESUBMITTAL OF TRANSMITTAL _____
SPECIFICATION SEC. NO. *(Cover only one section with each transmittal)*	PROJECT TITLE AND LOCATION		CHECK ONE: THIS TRANSMITTAL IS FOR ☐ FIO ☐ GOV'T. APPROVAL

ITEM NO. *a.*	DESCRIPTION OF ITEM SUBMITTED *(Type size, model number/etc.)*	MFG OR CONTR. CAT., CURVE DRAWING OR BROCHURE NO. *(See Instruction no. 8)* *c.*	NO. OF COPIES *d.*	CONTRACT REFERENCE DOCUMENT		FOR CONTRACTOR USE CODE *g.*	VARIATION *(See Instruction No. 6)* *h.*	FOR CE USE CODE *i.*
				SPEC. PARA. NO. *e.*	DRAWING SHEET NO. *f.*			

REMARKS

I certify that the above submitted items have been reviewed in detail and are correct and in strict conformance with the contract drawings and specifications except as other wise stated.

_____

NAME AND SIGNATURE OF CONTRACTOR

SECTION II - APPROVAL ACTION

ENCLOSURES RETURNED *(List by Item No.)*	NAME, TITLE AND SIGNATURE OF APPROVING AUTHORITY	DATE

INSTRUCTIONS

1. Section I will be initiated by the Contractor in the required number of copies.

2. Each transmittal shall be numbered consecutively in the space provided for "Transmittal No.". This number, in addition to the contract number, will form a serial number for identifying each submittal. For new submittals or resubmittals mark the appropriate box; on resubmittals, insert transmittal number of last submission as well as the new submittal number.

3. The "Item No." will be the same "Item No." as indicated on ENG FORM 4288-R for each entry on this form.

4. Submittals requiring expeditious handling will be submitted on a separate form.

5. Separate transmittal form will be used for submittals under separate sections of the specifications.

6. A check shall be placed in the "Variation" column when a submittal is not in accordance with the plans and specifications--also, a written statement to that effect shall be included in the space provided for "Remarks".

7. Form is self-transmittal, letter of transmittal is not required.

8. When a sample of material or Manufacturer's Certificate of Compliance is transmitted, indicate "Sample" or "Certificate" in column c, Section I.

9. U.S. Army Corps of Engineers approving authority will assign action codes as indicated below in space provided in Section I, column i to each item submitted. In addition they will ensure enclosures are indicated and attached to the form prior to return to the contractor. The Contractor will assign action codes as indicated below in Section I, column g, to each item submitted.

THE FOLLOWING ACTION CODES ARE GIVEN TO ITEMS SUBMITTED

A -- Approved as submitted.

B -- Approved, except as noted on drawings.

C -- Approved, except as noted on drawings. Refer to attached sheet resubmission required.

D -- Will be returned by separate correspondence.

E -- Disapproved (See attached).

F -- Receipt acknowledged.

FX -- Receipt acknowledged, does not comply as noted with contract requirements.

G -- Other *(Specify)*

10. Approval of items does not relieve the contractor from complying with all the requirements of the contract plans and specifications.

(Reverse of ENG Form 4025-R)

SECTION TABLE OF CONTENTS

DIVISION 01 - GENERAL REQUIREMENTS

SECTION 01351A

SAFETY, HEALTH, AND EMERGENCY RESPONSE (HTRW/UST)

01/01

PART 1 GENERAL

1.1 REFERENCES
1.2 DESCRIPTION OF WORK
1.3 SUBMITTALS
1.4 HAZWOPER Qualifications Certificates
1.5 REGULATORY REQUIREMENTS
1.6 PRECONSTRUCTION SAFETY CONFERENCE
1.7 SAFETY AND HEALTH PROGRAM
1.8 SITE SAFETY AND HEALTH PLAN
1.8.1 Acceptance and Modifications
1.8.2 Availability
1.9 STAFF ORGANZATION, QUALIFICATION AND RESPONSIBILITIES
1.9.1 Safety and Health Manager
1.9.2 Site Safety and Health Officer
1.10 HEAT STRESS MANAGEMENT
1.10.1 Physiological Monitoring
1.10.2 ACGIH General Controls for Heat Stress
1.10.3 ACGIH Job Specific Controls for Heat Stress
1.11 SPILL AND DISCHARGE CONTROL
1.12 EMERGENCY EQUIPMENT AND FIRST AID REQUIREMENTS

PART 2 PRODUCTS (Not Applicable)

PART 3 EXECUTION (Not Applicable)

-- End of Section Table of Contents --

SECTION 01351A

SAFETY, HEALTH, AND EMERGENCY RESPONSE (HTRW/UST)
01/01

PART 1 GENERAL1.1 REFERENCES

The publications listed below form a part of this specification to the extent referenced. The publications are referred to in the text by basic designation only.

AMERICAN CONFERENCE OF GOVERNMENTAL INDUSTRIAL HYGIENISTS (ACGIH)

ACGIH Limit Values	(1999) Threshold Limit Values for Chemical Substances and Physical Agents Biological Exposure Indices

AMERICAN NATIONAL STANDARDS INSTITUTE (ANSI)

ANSI Z358.1	(1998) Emergency Eyewash and Shower Equipment

AMERICAN PETROLEUM INSTITUTE (API)

API Pub 2219	(1999) Safe Operation of Vacuum Trucks in Petroleum Service, 2nd Edition
API RP 1604	(1996) Closure of Underground Petroleum Storage Tanks
API Std 2015	(1994) Safe Entry and Cleaning of Petroleum Storage Tanks

U.S. NATIONAL ARCHIVES AND RECORDS ADMINISTRATION (NARA)

10 CFR 20	Standards for Protection Against Radiation
29 CFR 1904	Recording and Reporting Occupational Injuries and Illnesses
29 CFR 1910	Occupational Safety and Health Standards
29 CFR 1926	Safety and Health Regulations for Construction
49 CFR 171	General Information, Regulations, and Definitions
49 CFR 172	Hazardous Materials Table, Special

	Provisions, Hazardous Materials Communications, Emergency Response Information, and Training Requirements

U.S. ARMY CORPS OF ENGINEERS (USACE)

EM 385-1-1	(1996) U.S. Army Corps of Engineers Safety and Health Requirements Manual
ER 385-1-92	(2000) Safety and Occupational Document Requirements for Hazardous, Toxic, and Radioactive Waste (HTRW) Activities

NATIONAL INSTITUTE FOR OCCUPATIONAL SAFETY AND HEALTH (NIOSH)

NIOSH Pub No. 85-115	(1985) Occupational Safety and Health Guidance Manual for Hazardous Waste Site Activities

1.2 DESCRIPTION OF WORK

This section requires contractors to implement practices and procedures for working safely and in compliance with OSHA and USACE regulation while performing cleanup activities on uncontrolled hazardous waste sites.

1.3 SUBMITTALS

Government approval is required for submittals with a "G" designation; submittals not having a "G" designation are for information only. When used, a designation following the "G" designation identifies the office that will review the submittal for the Government. The following shall be submitted in accordance with Section 01330 SUBMITTAL PROCEDURES:

SD-03 Product Data

HAZWOPER Qualifications Certificates; G

1.4 HAZWOPER Qualifications Certificates

A certificate for each worker performing cleanup operations with potential for unacceptable occupational exposure signed by the safety and health manager and the occupational physician indicating the workers meet the training and medical surveillance requirements of this contract.

1.5 REGULATORY REQUIREMENTS

Work performed under this contract shall comply with EM 385-1-1, OSHA requirements in 29 CFR 1910 and 29 CFR 1926, especially OSHA's Hazardous Waste Operations and Emergency Response Standard 29 CFR 1926.65/29 CFR

1910.120 and state specific OSHA requirements where applicable. Matters of interpretation of standards shall be submitted to the appropriate administrative agency for resolution before starting work. Where the requirements of this specification, applicable laws, criteria, ordinances, regulations, and referenced documents vary, the most stringent requirements shall apply.

1.6 PRECONSTRUCTION SAFETY CONFERENCE

The Contractor shall conduct a Preconstruction Safety Conference with his forces and the forces of his subcontractors. Minutes of the meeting shall be provided to the Contracting Officer.

1.7 SAFETY AND HEALTH PROGRAM

The Contractor shall develop and implement a Safety and Health Program (SHP) which incorporates requirements in OSHA standards 29 CFR 1910, Section .120 (b) and 29 CFR 1926, Section .65 (b) and section 01.A.07 of EM 385-1-1. The Safety and Health Program shall address the items in paragraph (b) of 29 CFR 1910.120/29 CFR 1926.65 and Appendix A of EM 385-1-1 in corporate specific detail. These items are: Signature Sheet; Background Information; Statement of Safety and Health Policy; Responsibilities and Lines of Authority; Subcontractors and Suppliers; Training; Safety and Health Inspections; Safety and Health Expectations, Incentives programs and Compliance; Accident Reporting; Medical Surveillance/Medical Support; Personal Protective Equipment; Standard Operating Procedures and Corporate Plans supporting occupational safety and health.

1.8 SITE SAFETY AND HEALTH PLAN

The Contractor shall develop and implement a Site Safety and Health Plan (SSHP) meeting the requirments of section 01.A.10 of EM 385-1-1 and 29 CFR 1910.120/29 CFR 1926.65 (b)(4). At a minimum, the SSHP shall address each element in Appendix C of ER 385-1-92 and shall incorporate an Activity Hazard Analysis meeting the requirments of 01.A.10 and Figure 1-1 of EM 385-1-1.

a. The SSHP shall be considered a living document and shall be updated as occupational safety and health conditions change during project execution and improved as occuptional safety and health lessons are learned during the course of the poject.

b. SSHP elements in Appendix C of ER 385-1-92 are: 1. Site Description and Contamination Characterization; 2. Activity Hazard Analysis; 3. Health and Safety Staff Organization, Qualifications and Responsibilities for the project; 4. Health and Safety Training requirements for the project; 5. Personal Protective Equipment; 6. Medical Surveillance requirments for the poject; 7. Radiation Dosimetry, if applicable; 8. Exposure Monitoring/Air Sampling; 9. Heat Stress/Cold Stress Prevention; 10. Applicable elements of the Safety and Health Program edited to meet site specific conditions and site specific standard operating safety procedures, engineering controls and work practices used to reduce exposure to contaminants and prevent accidents; 11. Site Control Measures; 12.

Personal Hygiene and Decontamination; 13. Equipment Decontamination; 14. Emergency Equipment and First Aid Requirements; 15. Emergency Response and Contingency Procedures. 16. Accident Prevention; 17. Logs, Reports and Recordkeeping.

1.8.1 Acceptance and Modifications

Prior to submittal, the SSHP shall be signed and dated by the Safety and Health Manager and the Site Superintendent. The SSHP shall be submitted for review 10 days prior to the Preconstruction Safety Conference. Deficiencies in the SSHP will be discussed at the preconstruction safety conference, and the SSHP shall be revised to correct the deficiencies and resubmitted for acceptance. Onsite work shall not begin until the plan has been accepted. A copy of the written SSHP shall be maintained onsite. Changes and modifications to the accepted SSHP shall be made with the knowledge and concurrence of the Safety and Health Manager, the Site Superintendent, and the Contracting Officer. Should any unforeseen hazard become evident during the performance of the work, the Site Safety and Health Officer (SSHO) shall bring such hazard to the attention of the Safety and Health Manager, the Site Superintendent, and the Contracting Officer, both verbally and in writing, for resolution as soon as possible. In the interim, necessary action shall be taken to re-establish and maintain safe working conditions in order to safeguard onsite personnel, visitors, the public, and the environment. Disregard for the provisions of this specification or the accepted SSHP shall be cause for stopping of work until the matter has been rectified.

1.8.2 Availability

The SSHP shall be made available in accordance with 29 CFR 1910, Section .120 (b)(1)(v) and 29 CFR 1926, Section .65 (b)(1)(v).

1.9 STAFF ORGANZATION, QUALIFICATION AND RESPONSIBILITIES

1.9.1 Safety and Health Manager

Safety and Health Manager shall be a safety professional certified by the Board of Certified Safety Professionals.

1). The Safety and Health Manager shall have the following additional qualifications:

a. A minimum of 3 years experience in developing and implementing safety and health programs. Working knowledge of state and Federal occupational safety and health regulations.

2). The Safety and Health Manager shall:

a. Be responsible for the development, implementation, oversight, and enforcement of the SSHP.

b. Sign and date the SSHP prior to submittal.

c. Conduct initial site-specific training.

d. Be present onsite during the first dayof remedial activities and at the startup of each new major phase.

e. Visit the site as needed and at least once per monthfor the duration of activities, to audit the effectiveness of the SSHP.

f. Be available for emergencies.

g. Provide onsite consultation as needed to ensure the SSHP is fully implemented.

h. Coordinate any modifications to the SSHP with the Site Superintendent, the SSHO, and the Contracting Officer.

i. Provide continued support for upgrading/downgrading of the level of personal protection.

j. Be responsible for evaluating air monitoring data and recommending changes to engineering controls, work practices, and PPE.

k. Review accident reports and results of daily inspections.

l. Serve as a member of the Contractor's quality control staff.

1.9.2 Site Safety and Health Officer

An individual and one alternate alternates shall be designated the Site Safety and Health Officer (SSHO). The name, qualifications (education and training summary and documentation), and work experience of the Site Safety and Health Officer and alternate shall be included in the SSHP.

1). The SSHO shall have the following qualifications:

a. A minimum of 1 year experience in implementing safety and health programs.

b. Documented experience in construction techniques and construction safety procedures.

c. Working knowledge of Federal and state occupational safety and health regulations.

2). The Site Safety and Health Officer shall:

a. Assist and represent the Safety and Health Manager in onsite training and the day to day onsite implementation and enforcement of the accepted SSHP.

b. Be assigned to the site on a full time basis for the duration of field activities. The SSHO shall have no duties other than Safety and Health related duties. If operations are performed during more than 1 work shift per day, a site Safety and Health Officer shall be present for each shift and act as the radiation safety officer (RSO) as defined in paragraph

06.E.02 of EM 385-1-1 on radioactive waste cleanup projects.

c. Have authority to ensure site compliance with specified safety and health requirements, Federal, state and OSHA regulations and all aspects of the SSHP including, but not limited to, activity hazard analyses, air monitoring, monitoring for ionizing radiation, use of PPE, decontamination, site control, standard operating procedures used to minimize hazards, safe use of engineering controls, the emergency response plan, confined space entry procedures, spill containment program, and preparation of records by performing a daily safety and health inspection and documenting results on the Daily Safety Inspection Log in accordance with 29 CFR 1904.

d. Have authority to stop work if unacceptable health or safety conditions exist, and take necessary action to re-establish and maintain safe working conditions.

e. Consult with and coordinate any modifications to the SSHP with the Safety and Health Manager, the Site Superintendent, and the Contracting Officer.

f. Serve as a member of the Contractor's quality control staff on matters relating to safety and health.

g. Conduct accident investigations and prepare accident reports.

h. Review results of daily quality control inspections and document safety and health findings into the Daily Safety Inspection Log.

i. In coordination with site management and the Safety and Health Manager, recommend corrective actions for identified deficiencies and oversee the corrective actions.

1.10 HEAT STRESS MANAGEMENT

The Contractor shall establish a heat stress management program and implement it when the ambient temperature exceeds 70 Degrees F. The heat stress management program shall consist of the following procedures and practices.

1.10.1 Physiological Monitoring

The Contractor shall train or otherwise assure workers heart rates and body core temperatures are monitored and assure that threshold levels in Table 4 of ACGIH Limit Values are not exceeded.

1.10.2 ACGIH General Controls for Heat Stress

The Contractor shall implement general heat stress control procedures in Table 5 of ACGIH Limit Values as part of his heat stress management program.

1.10.3 ACGIH Job Specific Controls for Heat Stress

The Contractor shall implement job specific heat stress controls in Table 5 of ACGIH Limit Values when site specific conditions warrant.

1.11 SPILL AND DISCHARGE CONTROL

Written spill and discharge containment/control procedures shall be developed and implemented. These procedures shall address materials likely to be used or encountered on the project site. These procedures shall describe prevention measures, such as building berms or dikes; spill control measures and material to be used (e.g. booms, vermiculite); location of the spill control material; personal protective equipment required to cleanup spills; disposal of contaminated material; and who is responsible to report the spill. Storage of contaminated material or hazardous materials shall be appropriately bermed, diked and/or contained to prevent any spillage of material on uncontaminated soil. If the spill or discharge is reportable, and/or human health or the environment are threatened, the National Response Center, the state, and the Contracting Officer shall be notified as soon as possible.

1.12 EMERGENCY EQUIPMENT AND FIRST AID REQUIREMENTS

The following items, as a minimum, shall be maintained onsite and available for immediate use:

a. First aid equipment and supplies approved by the consulting physician.

b. Emergency eyewashes and showers which comply with ANSI Z358.1.

c. Emergency-use respirators.

d. Fire extinguishers with a minimum rating of 20-A:120-B:C.shall be provided at site facilities and in all vehicles and at any other site locations where flammable or combustible materials present a fire risk.

PART 2 PRODUCTS (Not Applicable)

PART 3 EXECUTION (Not Applicable)

-- End of Section --

SECTION TABLE OF CONTENTS

DIVISION 01 - GENERAL REQUIREMENTS

SECTION 01355A

ENVIRONMENTAL PROTECTION

PART 1 GENERAL

1.1 REFERENCES
1.2 DEFINITIONS
1.2.1 Environmental Pollution and Damage
1.2.2 Environmental Protection
1.2.3 Contractor Generated Hazardous Waste
1.2.4 Land Application for Discharge Water
1.2.5 Pesticide
1.2.6 Pests
1.2.7 Surface Discharge
1.2.8 Waters of the United States
1.2.9 Wetlands
1.3 GENERAL REQUIREMENTS
1.4 SUBCONTRACTORS
1.5 PAYMENT
1.6 SUBMITTALS
1.7 ENVIRONMENTAL PROTECTION PLAN
1.7.1 Compliance
1.7.2 Contents
1.7.3 Appendix
1.8 PROTECTION FEATURES
1.9 ENVIRONMENTAL ASSESSMENT OF CONTRACT DEVIATIONS
1.10 NOTIFICATION

PART 2 PRODUCTS (NOT USED)

PART 3 EXECUTION

3.1 ENVIRONMENTAL PERMITS AND COMMITMENTS
3.2 LAND RESOURCES
3.2.1 Work Area Limits
3.2.2 Landscape
3.2.3 Erosion and Sediment Controls
3.2.4 Contractor Facilities and Work Areas
3.3 WATER RESOURCES
3.3.1 [Enter Appropriate Subpart Title Here]
3.3.2 Stream Crossings
3.3.3 Wetlands
3.4 AIR RESOURCES
3.4.1 Particulates
3.4.2 Odors

3.4.3 Sound Intrusions
3.4.4 Burning
3.5 CHEMICAL MATERIALS MANAGEMENT AND WASTE DISPOSAL
3.5.1 Solid Wastes
3.5.2 Chemicals and Chemical Wastes
3.5.3 Contractor Generated Hazardous Wastes/Excess Hazardous Materials
3.5.4 Fuel and Lubricants
3.6 HISTORICAL, ARCHAEOLOGICAL, AND CULTURAL RESOURCES
3.7 BIOLOGICAL RESOURCES
3.8 PREVIOUSLY USED EQUIPMENT
3.9 MAINTENANCE OF POLLUTION FACILITIES
3.10 TRAINING OF CONTRACTOR PERSONNEL
3.11 POST CONSTRUCTION CLEANUP

-- End of Section Table of Contents --

SECTION 01355A

ENVIRONMENTAL PROTECTION

PART 1 GENERAL

1.1 REFERENCES

The publications listed below form a part of this specification to the extent referenced. The publications are referred to in the text by basic designation only.

U.S. ARMY CORPS OF ENGINEERS (USACE)

EM 385-1-1	(1996) U.S. Army Corps of Engineers Safety and Health Requirements Manual
WETLAND MANUAL	Corps of Engineers Wetlands Delineation Manual Technical Report Y-87-1

1.2 DEFINITIONS

1.2.1 Environmental Pollution and Damage

Environmental pollution and damage is the presence of chemical, physical, or biological elements or agents which adversely affect human health or welfare; unfavorably alter ecological balances of importance to human life; affect other species of importance to humankind; or degrade the environment aesthetically, culturally and/or historically.

1.2.2 Environmental Protection

Environmental protection is the prevention/control of pollution and habitat disruption that may occur to the environment during construction. The control of environmental pollution and damage requires consideration of land, water, and air; biological and cultural resources; and includes management of visual aesthetics; noise; solid, chemical, gaseous, and liquid waste; radiant energy and radioactive material as well as other pollutants.

1.2.3 Contractor Generated Hazardous Waste

Contractor generated hazardous waste means materials that, if abandoned or disposed of, may meet the definition of a hazardous waste. These waste streams would typically consist of material brought on site by the Contractor to execute work, but are not fully consumed during the course of construction. Examples include, but are not limited to, excess paint thinners (i.e. methyl ethyl ketone, toluene etc.), waste thinners,excess paints, excess solvents, waste solvents, and excess pesticides, and contaminated pesticide equipment rinse water.

1.2.4 Land Application for Discharge Water

The term "Land Application" for discharge water implies that the Contractor shall discharge water at a rate which allows the water to percolate into the soil. No sheeting action, soil erosion, discharge into storm sewers, discharge into defined drainage areas, or discharge into the "waters of the United States" shall occur. Land Application shall be in compliance with all applicable Federal, State, and local laws and regulations.

1.2.5 Pesticide

Pesticide is defined as any substance or mixture of substances intended for preventing, destroying, repelling, or mitigating any pest, or intended for use as a plant regulator, defoliant or desiccant.

1.2.6 Pests

The term "pests" means arthropods, birds, rodents, nematodes, fungi, bacteria, viruses, algae, snails, marine borers, snakes, weeds and other organisms (except for human or animal disease-causing organisms) that adversely affect the well-being of personnel and animals; attack or damage real property, supplies, equipment, or vegetation; or are otherwise undesirable.

1.2.7 Surface Discharge

The term "Surface Discharge" implies that the water is discharged with possible sheeting action and subsequent soil erosion may occur. Waters that are surface discharged may terminate in drainage ditches, storm sewers,creeks, and/or "waters of the United States" and would require a permit to discharge water from the governing agency.

1.2.8 Waters of the United States

All waters which are under the jurisdiction of the Clean Water Act, as defined in 33 CFR 328.

1.2.9 Wetlands

Wetlands means those existing (without project) areas that are inundated or saturated by surface or ground water at a frequency and duration sufficient to support, and that under normal circumstances do support, a prevalence of vegetation typically adapted for life in saturated soil conditions. Wetlands generally include swamps, marshes, and bogs. Official determination of whether or not an area is classified as a wetland must be done in accordance with WETLAND MANUAL.

1.3 GENERAL REQUIREMENTS

The Contractor shall minimize environmental pollution and damage that may occur as the result of construction operations. The environmental resources within the project boundaries and those affected outside the limits of permanent work shall be protected during the entire duration of this contract. The Contractor shall comply with all applicable

environmental Federal, State, and local laws and regulations. The Contractor shall be responsible for any delays resulting from failure to comply with environmental laws and regulations.

1.4 SUBCONTRACTORS

The Contractor shall ensure compliance with this section by subcontractors.

1.5 PAYMENT

No separate payment will be made for work covered under this section. The Contractor shall be responsible for payment of fees associated with environmental permits, application, and/or notices obtained by the Contractor. All costs associated with this section shall be included in the contract price. The Contractor shall be responsible for payment of all fines/fees for violation or non-compliance with Federal, State, Regional and local laws and regulations.

1.6 SUBMITTALS

Government approval is required for submittals with a "G" designation; submittals not having a "G" designation are for information only. When used, a designation following the "G" designation identifies the office that will review the submittal for the Government. The following shall be submitted in accordance with Section 01330 SUBMITTAL PROCEDURES:

SD-01 Preconstruction Submittals

Environmental Protection Plan; G

The environmental protection plan.

1.7 ENVIRONMENTAL PROTECTION PLAN

Prior to commencing construction activities or delivery of materials to the site, the Contractor shall submit an Environmental Protection Plan for review and approval by the Contracting Officer. The purpose of the Environmental Protection Plan is to present a comprehensive overview of known or potential environmental issues which the Contractor must address during construction. Issues of concern shall be defined within the Environmental Protection Plan as outlined in this section. The Contractor shall address each topic at a level of detail commensurate with the environmental issue and required construction task(s). Topics or issues which are not identified in this section, but which the Contractor considers necessary, shall be identified and discussed after those items formally identified in this section. Prior to submittal of the Environmental Protection Plan, the Contractor shall meet with the Contracting Officer for the purpose of discussing the implementation of the initial Environmental Protection Plan; possible subsequent additions and revisions to the plan including any reporting requirements; and methods for administration of the Contractor's Environmental Plans. The Environmental Protection Plan shall be current and maintained onsite by the Contractor.

1.7.1 Compliance

No requirement in this Section shall be construed as relieving the Contractor of any applicable Federal, State, and local environmental protection laws and regulations. During Construction, the Contractor shall be responsible for identifying, implementing, and submitting for approval any additional requirements to be included in the Environmental Protection Plan.

1.7.2 Contents

The environmental protection plan shall include, but shall not be limited to, the following:

a. Name(s) of person(s) within the Contractor's organization who is(are) responsible for ensuring adherence to the Environmental Protection Plan.

b. Name(s) and qualifications of person(s) responsible for manifesting hazardous waste to be removed from the site, if applicable.

c. Name(s) and qualifications of person(s) responsible for training the Contractor's environmental protection personnel.

d. Description of the Contractor's environmental protection personnel training program.

e. An erosion and sediment control plan which identifies the type and location of the erosion and sediment controls to be provided. The plan shall include monitoring and reporting requirements to assure that the control measures are in compliance with the erosion and sediment control plan, Federal, State, and local laws and regulations. A Storm Water Pollution Prevention Plan (SWPPP) may be substituted for this plan.

f. Drawings showing locations of proposed temporary excavations or embankments for haul roads, stream crossings, material storage areas, structures, sanitary facilities, and stockpiles of excess or spoil materials including methods to control runoff and to contain materials on the site.

g. Traffic control plans including measures to reduce erosion of temporary roadbeds by construction traffic, especially during wet weather. Plan shall include measures to minimize the amount of mud transported onto paved public roads by vehicles or runoff.

h. Work area plan showing the proposed activity in each portion of the area and identifying the areas of limited use or nonuse. Plan should include measures for marking the limits of use areas including methods for protection of features to be preserved within authorized work areas.

i. Drawing showing the location of borrow areas.

j. The Spill Control plan shall include the procedures, instructions, and reports to be used in the event of an unforeseen spill of a

substance regulated by 40 CFR 68, 40 CFR 302, 40 CFR 355, and/or regulated under State or Local laws and regulations. The Spill Control Plan supplements the requirements of EM 385-1-1. This plan shall include as a minimum:

1. The name of the individual who will report any spills or hazardous substance releases and who will follow up with complete documentation. This individual shall immediately notify the Contracting Officer and the local Fire Department in addition to the legally required Federal, State, and local reporting channels (including the National Response Center 1-800-424-8802) if a reportable quantity is released to the environment. The plan shall contain a list of the required reporting channels and telephone numbers.

2. The name and qualifications of the individual who will be responsible for implementing and supervising the containment and cleanup.

3. Training requirements for Contractor's personnel and methods of accomplishing the training.

4. A list of materials and equipment to be immediately available at the job site, tailored to cleanup work of the potential hazard(s) identified.

5. The names and locations of suppliers of containment materials and locations of additional fuel oil recovery, cleanup, restoration, and material-placement equipment available in case of an unforeseen spill emergency.

6. The methods and procedures to be used for expeditious contaminant cleanup.

k. A non-hazardous solid waste disposal plan identifying methods and locations for solid waste disposal including clearing debris. The plan shall include schedules for disposal. The Contractor shall identify any subcontractors responsible for the transportation and disposal of solid waste. Licenses or permits shall be submitted for solid waste disposal sites that are not a commercial operating facility. Evidence of the disposal facility's acceptance of the solid waste shall be attached to this plan during the construction. The Contractor shall attach a copy of each of the Non-hazardous Solid Waste Diversion Reports to the disposal plan. The report shall be submitted on the first working day after the first quarter that non-hazardous solid waste has been disposed and/or diverted and shall be for the previous quarter (e.g. the first working day of January, April, July, and October). The report shall indicate the total amount of waste generated and total amount of waste diverted in cubic yards or tons along with the percent that was diverted.

l. A recycling and solid waste minimization plan with a list of measures to reduce consumption of energy and natural resources. The plan shall detail the Contractor's actions to comply with and to

participate in Federal, State, Regional, and local government sponsored recycling programs to reduce the volume of solid waste at the source.

m. An air pollution control plan detailing provisions to assure that dust, debris, materials, trash, etc., do not become air borne and travel off the project site.

n. A contaminant prevention plan that: identifies potentially hazardous substances to be used on the job site; identifies the intended actions to prevent introduction of such materials into the air, water, or ground; and details provisions for compliance with Federal, State, and local laws and regulations for storage and handling of these materials. In accordance with EM 385-1-1, a copy of the Material Safety Data Sheets (MSDS) and the maximum quantity of each hazardous material to be on site at any given time shall be included in the contaminant prevention plan. As new hazardous materials are brought on site or removed from the site, the plan shall be updated.

o. A waste water management plan that identifies the methods and procedures for management and/or discharge of waste waters which are directly derived from construction activities, such as concrete curing water, clean-up water, dewatering of ground water, disinfection water, hydrostatic test water, and water used in flushing of lines.

p. A historical, archaeological, cultural resources biological resources and wetlands plan that defines procedures for identifying and protecting historical, archaeological, cultural resources, biological resources and wetlands known to be on the project site: and/or identifies procedures to be followed if historical archaeological, cultural resources, biological resources and wetlands not previously known to be onsite or in the area are discovered during construction. The plan shall include methods to assure the protection of known or discovered resources and shall identify lines of communication between Contractor personnel and the Contracting Officer.

q. A pesticide treatment plan shall be included and updated, as information becomes available. The plan shall include: sequence of treatment, dates, times, locations, pesticide trade name, EPA registration numbers, authorized uses, chemical composition, formulation, original and applied concentration, application rates of active ingredient (i.e. pounds of active ingredient applied), equipment used for application and calibration of equipment. The Contractor is responsible for Federal, State, Regional and Local pest management record keeping and reporting requirements.

1.7.3 Appendix

Copies of all environmental permits, permit application packages, approvals to construct, notifications, certifications, reports, and termination documents shall be attached,as an appendix, to the Environmental Protection Plan.

1.8 PROTECTION FEATURES

This paragraph supplements the Contract Clause PROTECTION OF EXISTING VEGETATION, STRUCTURES, EQUIPMENT, UTILITIES, AND IMPROVEMENTS. Prior to start of any onsite construction activities, the Contractor and the Contracting Officer shall make a joint condition survey. Immediately following the survey, the Contractor shall prepare a brief report including a plan describing the features requiring protection under the provisions of the Contract Clauses, which are not specifically identified on the drawings as environmental features requiring protection along with the condition of trees, shrubs and grassed areas immediately adjacent to the site of work and adjacent to the Contractor's assigned storage area and access route(s), as applicable. This survey report shall be signed by both the the Contractor and the Contracting Officer upon mutual agreement as to its accuracy and completeness. The Contractor shall protect those environmental features included in the survey report and any indicated on the drawings, regardless of interference which their preservation may cause to the Contractor's work under the contract.

1.9 ENVIRONMENTAL ASSESSMENT OF CONTRACT DEVIATIONS

Any deviations, requested by the Contractor, from the drawings,plans and specifications which may have an environmental impact will be subject to approval by the Contracting Officer and may require an extended review, processing, and approval time. The Contracting Officer reserves the right to disapprove alternate methods, even if they are more cost effective, if the Contracting Officer determines that the proposed alternate method will have an adverse environmental impact.

1.10 NOTIFICATION

The Contracting Officer will notify the Contractor in writing of any observed noncompliance with Federal, State or local environmental laws or regulations, permits, and other elements of the Contractor's Environmental Protection plan. The Contractor shall, after receipt of such notice, inform the Contracting Officer of the proposed corrective action and take such action when approved by the Contracting Officer. The Contracting Officer may issue an order stopping all or part of the work until satisfactory corrective action has been taken. No time extensions shall be granted or equitable adjustments allowed to the Contractor for any such suspensions. This is in addition to any other actions the Contracting Officer may take under the contract, or in accordance with the Federal Acquisition Regulation or Federal Law.

PART 2 PRODUCTS (NOT USED)

PART 3 EXECUTION

3.1 ENVIRONMENTAL PERMITS AND COMMITMENTS

The Contractor shall be responsible for obtaining and complying with all environmental permits and commitments required by Federal, State, Regional, and local environmental laws and regulations.]

3.2 LAND RESOURCES

The Contractor shall confine all activities to areas defined by the

drawings and specifications. Prior to the beginning of any construction, the Contractor shall identify any land resources to be preserved within the work area. Except in areas indicated on the drawings or specified to be cleared, the Contractor shall not remove, cut, deface, injure, or destroy land resources including trees, shrubs, vines, grasses, topsoil, and land forms without approval. No ropes, cables, or guys shall be fastened to or attached to any trees for anchorage unless specifically authorized. The Contractor shall provide effective protection for land and vegetation resources at all times as defined in the following subparagraphs. Stone, soil, or other materials displaced into uncleared areas shall be removed by the Contractor.

3.2.1 Work Area Limits

Prior to commencing construction activities, the Contractor shall mark the areas that need not be disturbed under this contract. Isolated areas within the general work area which are not to be disturbed shall be marked or fenced. Monuments and markers shall be protected before construction operations commence. Where construction operations are to be conducted during darkness, any markers shall be visible in the dark. The Contractor's personnel shall be knowledgeable of the purpose for marking and/or protecting particular objects.

3.2.2 Landscape

Trees, shrubs, vines, grasses, land forms and other landscape features indicated and defined on the drawings to be preserved shall be clearly identified by marking, fencing, or wrapping with boards, or any other approved techniques. The Contractor shall restore landscape features damaged or destroyed during construction operations outside the limits of the approved work area.

3.2.3 Erosion and Sediment Controls

The Contractor shall be responsible for providing erosion and sediment control measures in accordance with Federal, State, and local laws and regulations. The erosion and sediment controls selected and maintained by the Contractor shall be such that water quality standards are not violated as a result of the Contractor's construction activities. The area of bare soil exposed at any one time by construction operations should be kept to a minimum. The Contractor shall construct or install temporary and permanent erosion and sediment control best management practices (BMPs) as specified in Section 01356A STORM WATER POLLUTION PREVENTION MEASURES. BMPs may include, but not be limited to, vegetation cover, stream bank stabilization, slope stabilization, silt fences, construction of terraces, interceptor channels, sediment traps, inlet and outfall protection, diversion channels, and sedimentation basins. The Contractor's best management practices shall also be in accordance with the National Pollutant Discharge Elimination System (NPDES) Storm Water Pollution Prevention Plan (SWPPP) Any temporary measures shall be removed after the area has been stabilized.

3.2.4 Contractor Facilities and Work Areas

The Contractor's field offices, staging areas, stockpile storage, and temporary buildings shall be placed in areas designated on the drawings or as directed by the Contracting Officer. Temporary movement or relocation of Contractor facilities shall be made only when approved. Erosion and sediment controls shall be provided for on-site borrow and spoil areas to prevent sediment from entering nearby waters. Temporary excavation and embankments for plant and/or work areas shall be controlled to protect adjacent areas.

3.3 WATER RESOURCES

The Contractor shall monitor construction activities to prevent pollution of surface and ground waters. Toxic or hazardous chemicals shall not be applied to soil or vegetation unless otherwise indicated. All water areas affected by construction activities shall be monitored by the Contractor. For construction activities immediately adjacent to impaired surface waters, the Contractor shall be capable of quantifying sediment or pollutant loading to that surface water when required by State or Federally issued Clean Water Act permits.

3.3.1 [Enter Appropriate Subpart Title Here]

3.3.2 Stream Crossings

Stream crossings shall allow movement of materials or equipment without violating water pollution control standards of the Federal, State, and local governments.

3.3.3 Wetlands

The Contractor shall not enter, disturb, destroy, or allow discharge of contaminants into any existing (without project) wetlands.

3.4 AIR RESOURCES

Equipment operation, activities, or processes performed by the Contractor shall be in accordance with all Federal and State air emission and performance laws and standards.

3.4.1 Particulates

Dust particles; aerosols and gaseous by-products from construction activities; and processing and preparation of materials, such as from asphaltic batch plants; shall be controlled at all times, including weekends, holidays and hours when work is not in progress. The Contractor shall maintain excavations, stockpiles, haul roads, permanent and temporary access roads, plant sites, spoil areas, borrow areas, and other work areas within or outside the project boundaries free from particulates which would cause the Federal, State, and local air pollution standards to be exceeded or which would cause a hazard or a nuisance. Sprinkling, chemical treatment of an approved type, baghouse, scrubbers, electrostatic precipitators or other methods will be permitted to control particulates in the work area. Sprinkling, to be efficient, must be repeated to keep the disturbed area damp at all times. The Contractor must have sufficient, competent equipment available to accomplish these tasks. Particulate control shall be performed as the work proceeds and whenever a particulate

nuisance or hazard occurs. The Contractor shall comply with all State and local visibility regulations and shall comply with the Maricopa County Air Pollution Prevention Permit.

3.4.2 Odors

Odors from construction activities shall be controlled at all times. The odors shall not cause a health hazard and shall be in compliance with State regulations and/or local ordinances.

3.4.3 Sound Intrusions

The Contractor shall keep construction activities under surveillance and control to minimize environment damage by noise. The Contractor shall comply with the provisions of the State of Arizona. Maricopa County, and City of Tempe rules.

3.4.4 Burning

Burning will not be allowed on the project site.

3.5 CHEMICAL MATERIALS MANAGEMENT AND WASTE DISPOSAL

Disposal of wastes shall be as directed below, unless otherwise specified in other sections and/or shown on the drawings.

3.5.1 Solid Wastes

Solid wastes (excluding clearing debris) shall be placed in containers which are emptied on a regular schedule. Handling, storage, and disposal shall be conducted to prevent contamination. Segregation measures shall be employed so that no hazardous or toxic waste will become co-mingled with solid waste. [The Contractor shall transport solid waste off Government property and dispose of it in compliance with Federal, State, and local requirements for solid waste disposal.

3.5.2 Chemicals and Chemical Wastes

Chemicals shall be dispensed ensuring no spillage to the ground or water. Periodic inspections of dispensing areas to identify leakage and initiate corrective action shall be performed and documented. This documentation will be periodically reviewed by the Government. Chemical waste shall be collected in corrosion resistant, compatible containers. Collection drums shall be monitored and removed to a staging or storage area when contents are within 6 inches of the top. Wastes shall be classified, managed, stored, and disposed of in accordance with Federal, State, and local laws and regulations.

3.5.3 Contractor Generated Hazardous Wastes/Excess Hazardous Materials

Hazardous wastes are defined in 40 CFR 261, or are as defined by applicable State and local regulations. Hazardous materials are defined in 49 CFR 171 - 178. The Contractor shall, at a minimum, manage and store hazardous waste in compliance with 40 CFR 262. The Contractor shall take sufficient measures to prevent spillage of hazardous and toxic materials

during dispensing. The Contractor shall segregate hazardous waste from other materials and wastes, shall protect it from the weather by placing it in a safe covered location, and shall take precautionary measures such as berming or other appropriate measures against accidental spillage. The Contractor shall be responsible for storage, describing, packaging, labeling, marking, and placarding of hazardous waste and hazardous material in accordance with 49 CFR 171 - 178, State, and local laws and regulations. The Contractor shall transport Contractor generated hazardous waste off Government property within 60 days in accordance with the Environmental Protection Agency and the Department of Transportation laws and regulations. The Contractor shall dispose of hazardous waste in compliance with Federal, State and local laws and regulations. Spills of hazardous or toxic materials shall be immediately reported to the Contracting Officer. Cleanup and cleanup costs due to spills shall be the Contractor's responsibility. The disposition of Contractor generated hazardous waste and excess hazardous materials are the Contractor's responsibility.

3.5.4 Fuel and Lubricants

Storage, fueling and lubrication of equipment and motor vehicles shall be conducted in a manner that affords the maximum protection against spill and evaporation. Fuel, lubricants and oil shall be managed and stored in accordance with all Federal, State, Regional, and local laws and regulations. Used lubricants and used oil to be discarded shall be stored in marked corrosion-resistant containers and recycled or disposed in accordance with 40 CFR 279, State, and local laws and regulations. There shall be no storage of fuel on the project site. Fuel must be brought to the project site each day that work is performed.

3.6 HISTORICAL, ARCHAEOLOGICAL, AND CULTURAL RESOURCES

If during excavation or other construction activities any previously unidentified or unanticipated historical, archaeological, and cultural resources are discovered or found, all activities that may damage or alter such resources shall be temporarily suspended. Resources covered by this paragraph include but are not limited to: any human skeletal remains or burials; artifacts; shell, midden, bone, charcoal, or other deposits; rock or coral alignments, pavings, wall, or other constructed features; and any indication of agricultural or other human activities. Upon such discovery or find, the Contractor shall immediately notify the Contracting Officer so that the appropriate authorities may be notified and a determination made as to their significance and what, if any, special disposition of the finds should be made. The Contractor shall cease all activities that may result in impact to or the destruction of these resources. The Contractor shall secure the area and prevent employees or other persons from trespassing on, removing, or otherwise disturbing such resources.

3.7 BIOLOGICAL RESOURCES

The Contractor shall minimize interference with, disturbance to, and damage to fish, wildlife, and plants including their habitat. The Contractor shall be responsible for the protection of threatened and endangered animal and plant species including their habitat in accordance with Federal, State, Regional, and local laws and regulations.

3.8 PREVIOUSLY USED EQUIPMENT

The Contractor shall clean all previously used construction equipment prior to bringing it onto the project site. The Contractor shall ensure that the equipment is free from soil residuals, egg deposits from plant pests, noxious weeds, and plant seeds. The Contractor shall consult with the USDA jurisdictional office for additional cleaning requirements.

3.9 MAINTENANCE OF POLLUTION FACILITIES

The Contractor shall maintain permanent and temporary pollution control facilities and devices for the duration of the contract or for that length of time construction activities create the particular pollutant.

3.10 TRAINING OF CONTRACTOR PERSONNEL

The Contractor's personnel shall be trained in all phases of environmental protection and pollution control. The Contractor shall conduct environmental protection/pollution control meetings for all Contractor personnel prior to commencing construction activities. Additional meetings shall be conducted for new personnel and when site conditions change. The training and meeting agenda shall include: methods of detecting and avoiding pollution; familiarization with statutory and contractual pollution standards; installation and care of devices, vegetative covers, and instruments required for monitoring purposes to ensure adequate and continuous environmental protection/pollution control; anticipated hazardous or toxic chemicals or wastes, and other regulated contaminants; recognition and protection of archaeological sites, artifacts, wetlands, and endangered species and their habitat that are known to be in the area.

3.11 POST CONSTRUCTION CLEANUP

The Contractor shall clean up all areas used for construction in accordance with Contract Clause: "Cleaning Up". The Contractor shall, unless otherwise instructed in writing by the Contracting Officer, obliterate all signs of temporary construction facilities such as haul roads, work area, structures, foundations of temporary structures, stockpiles of excess or waste materials, and other vestiges of construction prior to final acceptance of the work. The disturbed area shall be graded, filled and the entire area seeded unless otherwise indicated.

-- End of Section --

SECTION TABLE OF CONTENTS

DIVISION 01 - GENERAL REQUIREMENTS

SECTION 01356A

STORM WATER POLLUTION PREVENTION MEASURES

PART 1 GENERAL

1.1 REFERENCES
1.2 GENERAL
1.3 SUBMITTALS
1.4 EROSION AND SEDIMENT CONTROLS
1.4.1 Stabilization Practices
1.4.1.1 Unsuitable Conditions
1.4.1.2 No Activity for Less Than 21 Days
1.4.2 Structural Practices
1.4.2.1 Silt Fences
1.4.2.2 Straw Bales

PART 2 PRODUCTS

2.1 COMPONENTS FOR SILT FENCES
2.1.1 Filter Fabric
2.1.2 Silt Fence Stakes and Posts
2.1.3 Mill Certificate or Affidavit
2.1.4 Identification Storage and Handling
2.2 COMPONENTS FOR STRAW BALES

PART 3 EXECUTION

3.1 INSTALLATION OF SILT FENCES
3.2 INSTALLATION OF STRAW BALES
3.3 MAINTENANCE
3.3.1 Silt Fence Maintenance
3.3.2 Straw Bale Maintenance
3.4 INSPECTIONS
3.4.1 General
3.4.2 Inspections Details
3.4.3 Inspection Reports

-- End of Section Table of Contents --

SECTION 01356A

STORM WATER POLLUTION PREVENTION MEASURES

PART 1 GENERAL

1.1 REFERENCES

The publications listed below form a part of this specification to the extent referenced. The publications are referred to in the text by basic designation only.

AMERICAN SOCIETY FOR TESTING AND MATERIALS (ASTM)

ASTM D 4439	(1997) Standard Terminology for Geosynthetics
ASTM D 4491	(1996) Water Permeability of Geotextiles by Permittivity
ASTM D 4533	(1991; R 1996) Trapezoid Tearing Strength of Geotextiles
ASTM D 4632	(1991; R 1996) Grab Breaking Load and Elongation of Geotextiles
ASTM D 4751	(1995) Determining Apparent Opening Size of a Geotextile
ASTM D 4873	(1997) Identification, Storage, and Handling of Geosynthetic Rolls

1.2 GENERAL

The Contractor shall implement the storm water pollution prevention measures specified in this section in a manner which will meet the requirements of Section 01355A ENVIRONMENTAL PROTECTION.

1.3 SUBMITTALS

Government approval is required for submittals with a "G" designation; submittals not having a "G" designation are for information only. When used, a designation following the "G" designation identifies the office that will review the submittal for the Government. The following shall be submitted in accordance with Section 01330 SUBMITTAL PROCEDURES:

SD-07 Certificates

Mill Certificate or Affidavit; G

Certificate attesting that the Contractor has met all specified requirements.

1.4 EROSION AND SEDIMENT CONTROLS

The controls and measures required by the Contractor are described below.

1.4.1 Stabilization Practices

The stabilization practices to be implemented shall include geotextiles, erosion control matts, protection of trees, preservation of mature vegetation, etc. On his daily CQC Report, the Contractor shall record the dates when the major grading activities occur, ; when construction activities temporarily or permanently cease on a portion of the site; and when stabilization practices are initiated. Except as provided in paragraphs UNSUITABLE CONDITIONS and NO ACTIVITY FOR LESS THAN 21 DAYS, stabilization practices shall be initiated as soon as practicable, but no more than 14 days, in any portion of the site where construction activities have temporarily or permanently ceased.

1.4.1.1 Unsuitable Conditions

Where the initiation of stabilization measures by the fourteenth day after construction activity temporarily or permanently ceases is precluded by unsuitable conditions caused by the weather, stabilization practices shall be initiated as soon as practicable after conditions become suitable.

1.4.1.2 No Activity for Less Than 21 Days

Where construction activity will resume on a portion of the site within 21 days from when activities ceased (e.g., the total time period that construction activity is temporarily ceased is less than 21 days), then stabilization practices do not have to be initiated on that portion of the site by the fourteenth day after construction activity temporarily ceased.

1.4.2 Structural Practices

Structural practices shall be implemented to divert flows from exposed soils, temporarily store flows, or otherwise limit runoff and the discharge of pollutants from exposed areas of the site. Structural practices shall be implemented in a timely manner during the construction process to minimize erosion and sediment runoff. Structural practices shall include the following devices.

1.4.2.1 Silt Fences

The Contractor shall provide silt fences as a temporary structural practice to minimize erosion and sediment runoff. Silt fences shall be properly installed to effectively retain sediment immediately after completing each phase of work where erosion would occur in the form of sheet and rill erosion (e.g. clearing and grubbing, excavation, embankment, and grading). Final removal of silt fence barriers shall be upon approval by the Contracting Officer.

1.4.2.2 Straw Bales

The Contractor shall provide bales of straw as a temporary structural practice to minimize erosion and sediment runoff. Bales shall be properly placed to effectively retain sediment immediately after completing each phase of work (e.g., clearing and grubbing, excavation, embankment, and grading) in each independent runoff area (e.g., after clearing and grubbing in a area between a ridge and drain, bales shall be placed as work progresses, bales shall be removed/replaced/relocated as needed for work to progress in the drainage area). Final removal of straw bale barriers shall be upon approval by the Contracting Officer. Rows of bales of straw shall be provided as follows:

a. At the entrance to culverts that receive runoff from disturbed areas and at other locations as-needed.

PART 2 PRODUCTS

2.1 COMPONENTS FOR SILT FENCES

2.1.1 Filter Fabric

The geotextile shall comply with the requirements of ASTM D 4439, and shall consist of polymeric filaments which are formed into a stable network such that filaments retain their relative positions. The filament shall consist of a long-chain synthetic polymer composed of at least 85 percent by weight of ester, propylene, or amide, and shall contain stabilizers and/or inhibitors added to the base plastic to make the filaments resistance to deterioration due to ultraviolet and heat exposure. Synthetic filter fabric shall contain ultraviolet ray inhibitors and stabilizers to provide a minimum of six months of expected usable construction life at a temperature range of 0 to 120 degrees F. The filter fabric shall meet the following requirements:

FILTER FABRIC FOR SILT SCREEN FENCE

PHYSICAL PROPERTY	TEST PROCEDURE	STRENGTH REQUIREMENT
Grab Tensile	ASTM D 4632	100 lbs. min.
Elongation (%)		30 % max.
Trapezoid Tear	ASTM D 4533	55 lbs. min.
Permittivity	ASTM D 4491	0.2 sec-1
AOS (U.S. Std Sieve)	ASTM D 4751	20-100

2.1.2 Silt Fence Stakes and Posts

The Contractor may use either wooden stakes or steel posts for fence construction. Wooden stakes utilized for silt fence construction, shall have a minimum cross section of 2 inches by 2 inches. Steel posts (standard "U" or "T" section) utilized for silt fence construction, shall have a minimum weight of 1.33 pounds per linear foot.

2.1.3 Mill Certificate or Affidavit

A mill certificate or affidavit shall be provided attesting that the fabric and factory seams meet chemical, physical, and manufacturing requirements specified above. The mill certificate or affidavit shall specify the actual Minimum Average Roll Values and shall identify the fabric supplied by roll identification numbers. The Contractor shall submit a mill certificate or affidavit signed by a legally authorized official from the company manufacturing the filter fabric.

2.1.4 Identification Storage and Handling

Filter fabric shall be identified, stored and handled in accordance with ASTM D 4873.

2.2 COMPONENTS FOR STRAW BALES

The straw in the bales shall be stalks from oats, wheat, rye, barley, rice, or from grasses such as byhalia, etc., furnished in air dry condition. The bales shall have a standard cross section of 14 inches by 18 inches. All bales shall be either wire-bound or string-tied. The Contractor may use either wooden stakes or steel posts to secure the straw bales to the ground. Wooden stakes utilized for this purpose, shall have a minimum dimensions of 2 inches x 2 inches in cross section and shall have a minimum length of 3 feet. Steel posts (standard "U" or "T" section) utilized for securing straw bales, shall have a minimum weight of 1.33 pounds per linear foot and a minimum length of 3 feet.

PART 3 EXECUTION

3.1 INSTALLATION OF SILT FENCES

Silt fences shall extend a minimum of 16 inches above the ground surface and shall not exceed 34 inches above the ground surface. Filter fabric shall be from a continuous roll cut to the length of the barrier to avoid the use of joints. When joints are unavoidable, filter fabric shall be spliced together at a support post, with a minimum 6 inch overlap, and securely sealed. A trench shall be excavated approximately 4 inches wide and 4 inches deep on the upslope side of the location of the silt fence. The 4-inch by 4-inch trench shall be backfilled and the soil compacted over the filter fabric. Silt fences shall be removed upon approval by the Contracting Officer.

3.2 INSTALLATION OF STRAW BALES

Straw bales shall be placed in a single row, lengthwise on the contour, with ends of adjacent bales tightly abutting one another. Straw bales shall be installed so that bindings are oriented around the sides rather than along the tops and bottoms of the bales in order to prevent deterioration of the bindings. The barrier shall be entrenched and backfilled. A trench shall be excavated the width of a bale and the length of the proposed barrier to a minimum depth of 4 inches. After the bales are staked and chinked (gaps filled by wedging with straw), the excavated soil shall be backfilled against the barrier. Backfill soil shall conform

to the ground level on the downhill side and shall be built up to 4 inches against the uphill side of the barrier. Loose straw shall be scattered over the area immediately uphill from a straw bale barrier to increase barrier efficiency. Each bale shall be securely anchored by at least two stakes driven through the bale. The first stake or steel post in each bale shall be driven toward the previously laid bale to force the bales together. Stakes or steel pickets shall be driven a minimum 18 inches deep into the ground to securely anchor the bales.

3.3 MAINTENANCE

The Contractor shall maintain the temporary and permanent vegetation, erosion and sediment control measures, and other protective measures in good and effective operating condition by performing routine inspections to determine condition and effectiveness, by restoration of destroyed vegetative cover, and by repair of erosion and sediment control measures and other protective measures. The following procedures shall be followed to maintain the protective measures.

3.3.1 Silt Fence Maintenance

Silt fences shall be inspected in accordance with paragraph INSPECTIONS. Any required repairs shall be made promptly. Close attention shall be paid to the repair of damaged silt fence resulting from end runs and undercutting. Should the fabric on a silt fence decompose or become ineffective, and the barrier is still necessary, the fabric shall be replaced promptly. Sediment deposits shall be removed when deposits reach one-third of the height of the barrier. When a silt fence is no longer required, it shall be removed. The immediate area occupied by the fence and any sediment deposits shall be shaped to an acceptable grade.

3.3.2 Straw Bale Maintenance

Straw bale barriers shall be inspected in accordance with paragraph INSPECTIONS. Close attention shall be paid to the repair of damaged bales, end runs and undercutting beneath bales. Necessary repairs to barriers or replacement of bales shall be accomplished promptly. Sediment deposits shall be removed when deposits reach one-half of the height of the barrier. Bale rows used to retain sediment shall be turned uphill at each end of each row. When a straw bale barrier is no longer required, it shall be removed. The immediate area occupied by the bales and any sediment deposits shall be shaped to an acceptable grade.

3.4 INSPECTIONS

3.4.1 General

The Contractor shall inspect disturbed areas of the construction site, areas used for storage of materials that are exposed to precipitation that have not been finally stabilized, stabilization practices, structural practices, other controls, and area where vehicles exit the site at least once every seven (7) calendar days and within 24 hours of the end of any storm that produces 0.5 inches or more rainfall at the site. Where sites have been finally stabilized, such inspection shall be conducted at least once every month.

3.4.2 Inspections Details

Disturbed areas and areas used for material storage that are exposed to precipitation shall be inspected for evidence of, or the potential for, pollutants entering the drainage system. Erosion and sediment control measures identified in the Storm Water Pollution Prevention Plan shall be observed to ensure that they are operating correctly. Discharge locations or points shall be inspected to ascertain whether erosion control measures are effective in preventing significant impacts to receiving waters. Locations where vehicles exit the site shall be inspected for evidence of offsite sediment tracking.

3.4.3 Inspection Reports

For each inspection conducted, the Contractor shall prepare a report summarizing the scope of the inspection, name(s) and qualifications of personnel making the inspection, the date(s) of the inspection, major observations relating to the implementation of the Storm Water Pollution Prevention Plan, maintenance performed, and actions taken. The report shall be furnished to the Contracting Officer within 24 hours of the inspection as a part of the Contractor's daily CQC REPORT. A copy of the inspection report shall be maintained on the job site.

-- End of Section --

This page was intentionally left blank for duplex printing.

SECTION TABLE OF CONTENTS

DIVISION 01 - GENERAL REQUIREMENTS

SECTION 01420

SOURCES FOR REFERENCE PUBLICATIONS

PART 1 GENERAL

1.1 REFERENCES
1.2 ORDERING INFORMATION

-- End of Section Table of Contents --

SECTION 01420

SOURCES FOR REFERENCE PUBLICATIONS

PART 1 GENERAL

1.1 REFERENCES

Various publications are referenced in other sections of the specifications to establish requirements for the work. These references are identified in each section by document number, date and title. The document number used in the citation is the number assigned by the standards producing organization, (e.g. ASTM B 564 Nickel Alloy Forgings). However, when the standards producing organization has not assigned a number to a document, an identifying number has been assigned for reference purposes.

1.2 ORDERING INFORMATION

The addresses of the standards publishing organizations whose documents are referenced in other sections of these specifications are listed below, and if the source of the publications is different from the address of the sponsoring organization, that information is also provided. Documents listed in the specifications with numbers which were not assigned by the standards producing organization should be ordered from the source by title rather than by number. The designations "AOK" and "LOK" are for administrative purposes and should not be used when ordering publications.

ACI INTERNATIONAL (ACI)
P.O. Box 9094
Farmington Hills, MI 48333-9094
Ph: 248-848-3700
Fax: 248-848-3701
Internet: http://www.aci-int.org
AOK 5/01
LOK 2/01

ALUMINUM ASSOCIATION (AA)

900 19th Street N.W.
Washington, DC 20006
Ph: 202-862-5100
Fax: 202-862-5164
Internet: http://www.aluminum.org
AOK 5/01
LOK 2/01

AMERICAN ASSOCIATION OF STATE HIGHWAY AND TRANSPORTATION OFFICIALS (AASHTO)
444 N. Capital St., NW, Suite 249
Washington, DC 20001

Ph: 800-231-3475 202-624-5800
Fax: 800-525-5562 202-624-5806
Internet: http://www.transportation.org
AOK 5/01
LOK 2/01

AMERICAN CONCRETE PIPE ASSOCIATION (ACPA)
222 West Las Colinas Blvd., Suite 641
Irving, TX 75039-5423
Ph: 972-506-7216
Fax: 972-506-7682
Internet: http://www.concrete-pipe.org
e-mail: info@concrete-pipe.org
AOK 5/01
LOK 6/00

AMERICAN CONFERENCE OF GOVERNMENTAL INDUSTRIAL HYGIENISTS (ACGIH)
1330 Kemper Meadow Dr.
Suite 600
Cincinnati, OH 45240
Ph: 513-742-2020
Fax: 513-742-3355
Internet: http://www.acgih.org
E-mail: pubs@acgih.org
AOK 5/01
LOK 2/01

AMERICAN FOREST & PAPER ASSOCIATION (AF&PA)
American Wood Council
ATTN: Publications Dept.
1111 Nineteenth St. NW, Suite 800
Washington, DC 20036
Ph: 800-294-2372 or 202-463-2700
Fax: 202-463-2471
Internet: http://www.forestprod.org/awc/
AOK 5/01
LOK 6/00

AMERICAN INSTITUTE OF STEEL CONSTRUCTION (AISC)
One East Wacker Dr., Suite 3100
Chicago, IL 60601-2001
Ph: 312-670-2400
Publications: 800-644-2400
Fax: 312-670-5403
Internet: http://www.aisc.org
AOK 5/01
LOK 3/01

AMERICAN IRON AND STEEL INSTITUTE (AISI)
1101 17th St., NW Suite 1300
Washington, DC 20036
Ph: 202-452-7100
Internet: http://www.steel.org
AOK 5/01

LOK 3/01

AMERICAN NATIONAL STANDARDS INSTITUTE (ANSI)
1819 L Street, NW, 6th Floor
Washington, DC 20036
Ph: 202-293-8020
Fax: 202-293-9287
Internet: http://www.ansi.org/

Note --- Documents beginning with the letter "S" can be ordered from:

Acoustical Society of America
Standards and Publications Fulfillment Center
P. O. Box 1020
Sewickley, PA 15143-9998
Ph: 412-741-1979
Fax: 412-741-0609
Internet: http://asa.aip.org
General e-mail: asa@aip.org
Publications e-mail: asapubs@abdintl.com
AOK 5/01
LOK 6/00

AMERICAN NURSERY AND LANDSCAPE ASSOCIATION (ANLA)
1250 I St., NW, Suite 500
Washington, DC 20005-3922
Ph: 202-789-2900
FAX: 202-789-1893
Internet: http://www.anla.org
AOK 5/01
LOK 3/01

AMERICAN PUBLIC HEALTH ASSOCIATION (APHA)
800 I Street, NW
Washington, DC 20001
PH: 202-777-2742
FAX: 202-777-2534
Internet: http://www.apha.org
AOK 6/01
LOK 0/00

AMERICAN SOCIETY FOR NONDESTRUCTIVE TESTING (ASNT)
1711 Arlingate Lane
P.O. Box 28518
Columbus, OH 43228-0518
Ph: 800-222-2768
Fax: 614-274-6899
Internet: http://www.asnt.org
AOK 5/01
LOK 6/00

AMERICAN SOCIETY FOR QUALITY (ASQ)
600 North Plankinton Avenue

Milwaukee, WI 53202-3005
Ph: 800-248-1946
Fax: 414-272-1734
Internet: http://www.asq.org
AOK 5/01
LOK 3/01

AMERICAN SOCIETY FOR TESTING AND MATERIALS (ASTM)
100 Barr Harbor Drive
West Conshohocken, PA 19428-2959
Ph: 610-832-9585
Fax: 610-832-9555
Internet: http://www.astm.org
AOK 5/01
LOK 3/01

AMERICAN SOCIETY OF CIVIL ENGINEERS (ASCE)
1801 Alexander Bell Drive
Reston, VA 20191-4400
Ph: 703-295-6300 - 800-548-2723
Fax: 703-295-6222
Internet: http://www.asce.org
e-mail: marketing@asce.org
AOK 5/01
LOK 3/01

AMERICAN WATER WORKS ASSOCIATION(AWWA)
6666 West Quincy
Denver, CO 80235
Ph: 800-926-7337 - 303-794-7711
Fax: 303-794-7310
Internet: http://www.awwa.org
AOK 5/01
LOK 3/01

AMERICAN WELDING SOCIETY (AWS)
550 N.W. LeJeune Road
Miami, FL 33126
Ph: 800-443-9353 - 305-443-9353
Fax: 305-443-7559
Internet: http://www.amweld.org
AOK 5/01
LOK 3/01

ARCHITECTURAL & TRANSPORTATION BARRIERS COMPLIANCE BOARD (ATBCB)

The Access Board
1331 F Street, NW, Suite 1000
Washington, DC 20004-1111
PH: 202-272-5434
FAX: 202-272-5447
Internet: http://www.access-board.gov
AOK 6/01
LOK 0/00

ASME INTERNATIONAL (ASME)
Three Park Avenue
New York, NY 10016-5990
Ph: 212-591-7722
Fax: 212-591-7674
Internet: http://www.asme.org
AOK 5/01
LOK 6/00

ASPHALT INSTITUTE (AI)
Research Park Dr.
P.O. Box 14052
Lexington, KY 40512-4052
Ph: 859-288-4960
Fax: 859-288-4999
Internet: http://www.asphaltinstitute.org
AOK 5/01
LOK 6/00

ASSOCIATION OF EDISON ILLUMINATING COMPANIES (AEIC)
600 No. 18th St.
P.O. Box 2641
Birmingham, AL 35291
Ph: 205-257-2530
Fax: 205-257-2540
Internet: http://www.aeic.org
AOK 5/01
LOK 6/00

BIOCYCLE, JOURNAL OF COMPOSTING AND RECYCLING (BIOCYCLE)
The JG Press Inc.
419 State Avenue
Emmaus PA. 18049
Ph: 610-967-4135
Internet: http://www.biocycle.net
E-mail: jgpress@jgpress.com
AOK 5/01
LOK 0/00

CAST IRON SOIL PIPE INSTITUTE (CISPI)
5959 Shallowford Rd., Suite 419
Chattanooga, TN 37421
Ph: 423-892-0137
Fax: 423-892-0817
Internet: http://www.cispi.org
AOK 5/01
LOK 6/00

CENTERS FOR DISEASE CONTROL AND PREVENTION (CDC)

1600 Clifton Road
Atlanta, GA 30333
PH: 404-639-3534

FAX:
Internet: http://www.cdc.gov
AOK 6/01
LOK 0/00

CONCRETE REINFORCING STEEL INSTITUTE (CRSI)
933 N. Plum Grove Rd.
Schaumburg, IL 60173-4758
Ph: 847-517-1200
Fax: 847-517-1206
Internet: http://www.crsi.org/
AOK 5/01
LOK 6/00

CONSUMER PRODUCT SAFETY COMMISSION (CPSC)
4330 East-West Highway
Bethesda, Maryland 20814-4408
Ph: 301-504-0990
Fx: 301-504-0124 and 301-504-0025
Internet: http://www.cpsc.gov
AOK 5/01
LOK 6/00

COPPER DEVELOPMENT ASSOCIATION (CDA)
260 Madison Ave.
New York, NY 10016
Ph: 212-251-7200
Fax: 212-251-7234
Internet: http://www.copper.org
E-mail: staff@cda.copper.org
AOK 5/01
LOK 6/00

DUCTILE IRON PIPE RESEARCH ASSOCIATION (DIPRA)
245 Riverchase Parkway East, Suite 0
Birmingham, AL 35244
Ph: 205-402-8700
Fax: 205-402-8730
Internet: http://www.dipra.org
E-mail: info@dipra.org
AOK 5/01
LOK 6/00

EXPANSION JOINT MANUFACTURERS ASSOCIATION (EJMA)
25 N Broadway
Tarrytown, NY 10591
Ph: 914-332-0040
Fax: 914-332-1541
Internet: http://www.ejma.org
AOK 5/01
LOK 6/00

FORESTRY SUPPLIERS (FSUP)
205 West Rankin St.

P.O. Box 8397
Jackson, MS 39284-8397
Ph: 601-354-3565
Fax: 601-292-0165
Internet: http://www.forestry-suppliers.com
AOK 5/01
LOK 6/00

FOUNDATION FOR CROSS-CONNECTION CONTROL AND HYDRAULIC RESEARCH (FCCCHR)
University of South California
Kaprielian Hall 200
Los Angeles, CA 90089-2531
Ph: 213-740-2032
Fax: 213-740-8399
Internet: http://www.usc.edu/dept/fccchr
AOK 5/01
LOK 6/00

GEOSYNTHETIC INSTITUTE (GSI)
475 Kedron Ave.
Folsom, PA 19033-1208
Ph: 610-522-8440
Fax: 610-522-8441
Internet: http://geosynthetic-institute.org
AOK 5/01
LOK 6/00

GYPSUM ASSOCIATION (GA)
810 First St. NE, Suite 510
Washington, DC 20002
Ph: 202-289-5440
Fax: 202-289-3707
Internet: http://www.gypsum.org
AOK 5/01
LOK 6/00

ILLUMINATING ENGINEERING SOCIETY OF NORTH AMERICA (IESNA)
120 Wall St., 17th Floor
New York, NY 10005-4001
Ph: 212-248-5000
Fax: 212-248-5017
Internet: http://www.iesna.org
AOK 5/01
LOK 6/00

INDUSTRIAL FASTENERS INSTITUTE (IFI)
1717 East 9th St., Suite 1105
Cleveland, OH 44114-2879
Ph: 216-241-1482
Fax: 216-241-5901
Internet: http://www.industrial-fasteners.org
e-mail: indfast@aol.com
AOK 5/01

LOK 6/00

INSTITUTE OF ELECTRICAL AND ELECTRONICS ENGINEERS (IEEE)
445 Hoes Ln, P. O. Box 1331
Piscataway, NJ 08855-1331
Ph: 732-981-0060 OR 800-701-4333
Fax: 732-981-9667
Internet: http://www.ieee.org
E-mail: customer.services@ieee.org
AOK 5/01
LOK 6/00

INSTITUTE OF ENVIRONMENTAL SCIENCES AND TECHNOLOGY (IEST)
940 East Northwest Highway
Mount Prospect, IL 60056
Ph: 847-255-1561
Fax: 847-255-1699
Internet: http://www.iest.org
AOK 5/01
LOK 12/00

INSULATED CABLE ENGINEERS ASSOCIATION (ICEA)
P.O. Box 440
South Yarmouth, MA 02664
Ph: 508-394-4424
Fax: 508-394-1194
E-mail:
Internet: http://www.icea.net
AOK 5/01
LOK 6/00

INTERNATIONAL APPROVAL SERVICES (IAS)
8501 East Pleasant Valley Rd.
Cleveland, OH 44131
Ph: 216-524-4990
Fax: 216-328-8118
Internet: http://www.iasapprovals.org
AOK 5/01
LOK 6/00

INTERNATIONAL CODE COUNCIL (ICC)
5203 Leesburg Pike, Suite 600
Falls Church, VA 22041
Ph: 703-931-4533
Fax: 703-379-1546
Internet: http://www.intlcode.org
AOK 5/01
LOK 6/00

INTERNATIONAL CONCRETE REPAIR INSTITUTE (ICRI)

3166 S. River Road, Suite 132
Des Plaines, IL 60018
Phone: 847-827-0830

Fax: 847-827-0832
Internet: http://www.icri.org
AOK 9/01
LOK 0/00

INTERNATIONAL CONFERENCE OF BUILDING OFFICIALS (ICBO)
5360 Workman Mill Rd.
Whittier, CA 90601-2298
Ph: 800-284-4406
Ph: 562-699-0541
Fax: 562-692-3853
Internet: http://www.icbo.org
AOK 5/01
LOK 6/00

INTERNATIONAL ELECTRICAL TESTING ASSOCIATION (NETA)

P.O. Box 687
106 Stone Street
Morrison, Colorado 80465
PH: 303-697-8441
FAX: 303-697-8431
Internet: http://www.netaworld.org
AOK 6/01

IPC - ASSOCIATION CONNECTING ELECTRONICS INDUSTRIES (IPC)
2215 Sanders Rd.
Northbrook, IL 60062-6135
Ph: 847-509-9700
Fax: 847-509-9798
Internet: http://www.ipc.org
e-mail: orderipc@ipc.org
AOK 5/01
LOK 6/00

IRON & STEEL SOCIETY (ISS)
186 Thorn Hill Road
Warrendale, PA 15086-7528
Ph: 724-776-1535 Ext 1
Fax: 724-776-0430
E-Mail: dennisf@iss.org
Internet: http://www.issource.org
AOK 5/01
LOK 6/00

ISA - THE INSTRUMENTATION, SYSTEMS AND AUTOMATION SOCIETY (ISA)
67 Alexander Drive
P.O. Box 12277
Research Triangle Park, NC 27709
Ph: 919-549-8411
Fax: 919-549-8288
e-mail: info@isa.org
Internet: http://www.isa.org
AOK 5/01

LOK 6/00

MANUFACTURERS STANDARDIZATION SOCIETY OF THE VALVE AND FITTINGS INDUSTRY (MSS)
127 Park St., NE
Vienna, VA 22180-4602
Ph: 703-281-6613
Fax: 703-281-6671
Internet: http://www.mss-hq.com
e-mail: info@mss-hq.com
AOK 5/01
LOK 6/00

MASTER PAINTERS INSTITUTE (MPI)
4090 Graveley Street
Burnaby, BC CANADA V5C 3T6
PH: 888-674-8937
Fx: 888-211-8708
Internet: http://www.paintinfo.com/mpi
AOK 9/01
LOK 0/00

MATERIAL HANDLING INDUSTRY OF AMERICA (MHI)
8720 Red Oak Blvd., Suite 201
Charlotte, NC 28217-3992
Ph: 800-345-1815 or 704-676-1190
Fax: 704-676-1199
Internet: htp://www.mhia.org
AOK 5/01
LOK 6/00

NATIONAL CONCRETE MASONRY ASSOCIATION (NCMA)
2302 Horse Pen Road
Herndon, VA 20171-3499
Ph: 703-713-1900
Fax: 703-713-1910
Internet: http://www.ncma.org
AOK 9/01
LOK 0/00

NATIONAL DRILLING ASSOCIATION (NDA)

6089 Franz Road, Suite 101
Dublin, OH 43017
Ph: 614-798-8080
FAX: 614-798-2255
Internet: http://www.nda4u.com/
AOK 10/01
LOK 0/0

NATIONAL ELECTRICAL MANUFACTURERS ASSOCIATION (NEMA)
1300 N. 17th St., Suite 1847
Rosslyn, VA 22209
Ph: 703-841-3200

Fax: 703-841-3300
Internet: http://www.nema.org/
AOK 5/01
LOK 6/00

NATIONAL FIRE PROTECTION ASSOCIATION (NFPA)
1 Batterymarch Park
P.O. Box 9101
Quincy, MA 02269-9101
Ph: 617-770-3000
Fax: 617-770-0700
Internet: http://www.nfpa.org
AOK 5/01
LOK 8/00

NATIONAL INSTITUTE FOR CERTIFICATION IN ENGINEERING TECHNOLOGIES (NICET)
1420 King Street
Alexandria, VA 22314-2794
Ph: 888-476-4238
Internet: http://www.nicet.org
AOK 5/01
LOK 6/00

NATIONAL INSTITUTE FOR OCCUPATIONAL SAFETY AND HEALTH (NIOSH)
Mail Stop C-13
4676 Columbia Parkway
Cincinnati, OH 45226-1998
Ph: 800-356-4674
Fx: 513-533-8573
Internet: http://www.cdc.gov/niosh/homepage.html
To order pubs for which a fee is charged, order from:
Superintendent of Documents
U.S. Government Printing Office
732 North Capitol Street, NW
Mailstop: SDE
Washington, DC 20401
Ph: 202-512-1530
Fax: 202-512-1262
Internet: http://www.gpo.gov
AOK 5/01
LOK 6/00

NATIONAL INSTITUTE OF STANDARDS AND TECHNOLOGY (NIST)
100 Bureau Drive
Stop 3460
Gaithersburg, MD 20899-3460
Ph: 301-975-NIST
Internet: http://www.nist.gov
Order Publications From:
Superintendent of Documents
U.S. Government Printing Office
732 North Capitol Street, NW
Mailstop: SDE

Washington, DC 20401
Ph: 202-512-1530
Fax: 202-512-1262
Internet: http://www.gpo.gov
or
National Technical Information Services (NTIS)
5285 Port Royal Rd.
Springfield, VA 22161
Ph: 703-605-6000
Fax: 703-605-6900
Internet: http://www.ntis.gov
AOK 5/01
LOK 6/00

NATIONAL LIME ASSOCIATION (NLA)

200 North Glebe Road, Suite 800
Arlington, VA 22203
PH: 703-243-5463
FAX: 703-243-5489
Internet: http://www.lime.org
AOK 6/01
LOK 0/00

NATIONAL READY-MIXED CONCRETE ASSOCIATION (NRMCA)
900 Spring St.
Silver Spring, MD 20910
Ph: 301-587-1400
Fax: 301-585-4219
Internet: http://www.nrmca.org
AOK 5/01
LOK 6/00

NATURAL RESOURCE, AGRICULTURAL AND ENGINEERING SERVICE (NRAES)

Cooperative Extension
152 Riley-Robb Hall
Ithaca, NY 14853-5701
Ph: 607-255-7654
Fax: 607-254-8770
Internet: http://www.nraes.org
E-mail: nraes@cornell.edu
AOK 5/01
LOK 6/00

NSF INTERNATIONAL (NSF)
ATTN: Publications
789 North Dixboro Rd.
P.O. Box 130140
Ann Arbor, MI 48113-0140
Ph: 734-769-8010
Fax: 734-769-0109
Toll Free: 800-NSF-MARK
Internet: http://www.nsf.org

AOK 5/01
LOK 6/00

PIPE FABRICATION INSTITUTE (PFI)
655 32nd Avenue, Suite 201
Lachine, QC, Canada H8T 3G6
Ph: 514-634-3434
Fax: 514-634-9736
Internet: http://www.pfi-institute.org
e-mail: pfi@pfi-institute.org
AOK 5/01
LOK 6/00

PLASTIC PIPE AND FITTINGS ASSOCIATION (PPFA)
800 Roosevelt Rd., Bldg C, Suite 20
Glen Ellyn, IL 60137
Ph: 630-858-6540
Fax: 630-790-3095
Internet: http://www.ppfahome.org
AOK 5/01
LOK 6/00

PLASTICS PIPE INSTITUTE (PPI)
1825 Connecticut Ave. NW
Washington, D. C. 20009
Ph: 202-462-9607
Fax: 202-462-9779
Internet: http://www.plasticpipe.org
AOK 5/01
LOK 6/00

PLUMBING AND DRAINAGE INSTITUTE (PDI)
45 Bristol Dr.
South Easton, MA 02375
Ph: 508-230-3516 or 800-589-8956
Fax: 508-230-3529
Internet: http://www.pdionline.org
E-Mail: info@pdionline.org
AOK 5/01
LOK 6/00

PLUMBING AND PIPING INDUSTRY COUNCIL (PPIC)
9450 SW Commerce Circle, Suite 310
Wilsonville, OR 97070-9626
Ph: 503-682-7919
Fax: 503-682-6241
Internet: http://www.pmcaoregon.com/
AOK 11/01
LOK 0/00

POST-TENSIONING INSTITUTE (PTI)
1717 West Northern Avenue, Suite 114
Phoenix, AZ 85021
Ph: 602-870-7540

Fax: 602-870-7541
Internet: http://www.post-tensioning.org/
AOK 1/02
LOK 1/02

PRECAST/PRESTRESSED CONCRETE INSTITUTE (PCI)
209 West Jackson Blvd.
Chicago, IL 60606-6938
Ph: 312-786-0300
Fax: 312-786-0353
Internet: http://www.pci.org
e-mail: info@pci.org
AOK 5/01
LOK 6/00

RUBBER MANUFACTURERS ASSOCIATION (RMA)

1400 K St., NW, Suite 900
Washington, DC 20005
Ph: 202-682-4800
Fax: 202-682-4854
Internet: http://www.rma.org
Order Publications from:
The Mail Room
P. O. Box 3147
Medina, OH 44258
Ph: 800-325-5095 EXT 242 or 330-723-2978
Fax: 330-725-0576
AOK 5/01
LOK 6/00

SOCIETY OF THE PLASTICS INDUSTRY (SPI)

1801 K Street, NW, Suite 600K
Washington, DC 20006
PH: 202-974-5200
FX: 202-296-7005
Internet: http://www.socplas.org
AOK 11/01
LOK 0/00

THE SOCIETY FOR PROTECTIVE COATINGS (SSPC)
40 24th Street, 6th Floor
Pittsburgh, PA 15222-4656
Ph: 412-281-2331
Fax: 412-281-9992
Internet: http://www.sspc.org
AOK 5/01
LOK 6/00

TURFGRASS PRODUCERS INTERNATIONAL (TPI)
1855-A Hicks Road
Rolling Meadows, IL 60008
PH: 800-405-8873

FAX: 847-705-8347
Internet: http://www.turfgrasssod.org
AOK 6/01
LOK 0/00

UNDERWRITERS LABORATORIES (UL)
333 Pfingsten Rd.
Northbrook, IL 60062-2096
Ph: 847-272-8800
Fax: 847-272-8129
Internet: http://www.ul.com/
e-mail: northbrook@us.ul.com
AOK 5/01
LOK 6/00

UNI-BELL PVC PIPE ASSOCIATION (UBPPA)
2655 Villa Creek Dr., Suite 155
Dallas, TX 75234
Ph: 214-243-3902
Fax: 214-243-3907
Internet: http://www.uni-bell.org
e-mail: info@uni-bell.org
AOK 5/01
LOK 6/00

U.S. AIR FORCE (USAF)
Air Force Publishing Distribution Center
Ph: 410-687-3330
E-mail: afpdc-service@pentagon.af.mil
Internet: http://www.afpubs.hq.af.mil
AOK 11/01
LOK

U.S. ARMY (DA)

U.S. Army Publications Agency
Internet: http://www.usapa.army.mil/
AOK: Publications in electronic media
LOK:

U.S. ARMY CORPS OF ENGINEERS (USACE)

Order CRD-C DOCUMENTS from:
U.S. Army Engineer Waterways Experiment Station
ATTN: Technical Report Distribution Section, Services Branch, TIC
3909 Halls Ferry Rd.
Vicksburg, MS 39180-6199
Ph: 601-634-2664
Fax: 601-634-2388
Internet: http://www.wes.army.mil/SL/MTC/handbook/handbook.htm

Order Other Documents from:
USACE Publications Depot

Attn: CEIM-SP-D
2803 52nd Avenue
Hyattsville, MD 20781-1102
Ph: 301-394-0081
Fax: 301-394-0084
Internet: http://www.usace.army.mil/publications
or http://www.hnd.usace.army.mil/techinfo/index.htm
AOK 5/01
LOK 6/00

U.S. ARMY ENVIRONMENTAL CENTER (AEC)

5179 Hoadley Road
Aberdeen Proving Ground, MD 21010-5401
Internet: http://aec.army.mil
AOK 11/01
LOK 0/00

U. S. ARMY ENVIRONMENTAL HYGIENE AGENCY (USAEHA)

Telephone:
FAX:
Internet: None found
AOK 11/01
LOK

U.S. DEPARTMENT OF AGRICULTURE (USDA)

Order AMS Publications from:
AGRICULTURAL MARKETING SERVICE (AMS)
Seed Regulatory and Testing Branch
USDA, AMS, LS Div.
Room 209, Bldg. 306, BARC-East
Beltsville, MD 20705-2325
Ph: 301-504-9430
Fax: 301-504-8098
Internet: http://www.ams.usda.gov/nop/
e-mail: jeri.irwin@usda.gov

Order Other Publications from:
U.S. Department of Agriculture
14th and Independence Ave., SW, Room 4028-S
Washington, DC 20250
Ph: 202-720-2791
Fax: 202-720-2166
Internet: http://www.usda.gov
AOK 5/01
LOK 6/00

U.S. DEPARTMENT OF COMMERCE (DOC)

Order Publications From:
National Technical Information Service
5285 Port Royal Road

Springfield, VA 22161
Ph: 703-605-6000
Fax: 703-605-6900
Internet: http://www.ntis.gov
AOK 5/01
LOK 6/00

U.S. DEPARTMENT OF DEFENSE (DOD)

Order DOD Documents from:
National Technical Information Service
5285 Port Royal Road
Springfield, VA 22161
Ph: 703-605-6000
FAX: 703-605-6900
Internet: http://www.ntis.gov

Order Military Specifications, Standards and Related Publications from:
Department of Defense Single Stock Point for (DODSSP)
Defense Automation and Production Service (DAPS)
Bldg 4D
700 Robbins AV
Philadelphia, PA 19111-5094
Ph: 215-697-2179
Fax: 215-697-1462
Internet: http://www.dodssp.daps.mil
AOK 5/01
LOK 6/00

U.S. ENVIRONMENTAL PROTECTION AGENCY (EPA)
Ariel Rios Building
1200 Pennsylvania Avenue, N.W.
Washington, DC 20460
Ph: 202-260-2090
FAX: 202-260-6257
Internet: http://www.epa.gov

NOTE --- Some documents are available only from:
National Technical Information Services (NTIS)
5285 Port Royal Rd.
Springfield, VA 22161
Ph: 703-605-6000
Fax: 703-605-6900
Internet: http://www.ntis.gov
AOK 5/01
LOK 6/00

U.S. FEDERAL EMERGENCY MANAGEMENT AGENCY (FEMA)
500 C Street, SW
Washington, D.C. 20472
Phone: 202-646-4600
Internet: http://www.fema.gov
AOK 8/01

LOK 0/00

U.S. FEDERAL HIGHWAY ADMINISTRATION (FHWA)
Office of Highway Safety (HHS-31)
400 Seventh St., SW
Washington, DC 20590-0001
Ph: 202-366-0411
Fax: 202-366-2249
Internet: http://www.fhwa.dot.gov
Order from:

Superintendant of Documents
U. S. Government Printing Office
732 North Capitol Street, NW
Mailstop: SDE
Washington, DC 20401
Ph: 202-512-1530
Fax: 202-512-1262
Internet: http://www.gpo.gov
AOK 5/01
LOK 6/00

U.S. GENERAL SERVICES ADMINISTRATION (GSA)

Order from:
General Services Administration
Federal Supply Service Bureau
470 E L'Enfant Plaza, S.W., Suite 8100
Washington, DC 20407
Ph: 202-619-8925
Fx: 202-619-8978
Internet: http://www.fss.gsa.gov/pub/fed-specs.cfm
AOK 5/01
LOK 6/00

WATER ENVIRONMENT FEDERATION (WEF)
601 Wythe St.
Alexandria, VA 22314-1994
Ph: 703-684-2452
Fax: 703-684-2492
Internet: http://www.wef.org
AOK 5/01
LOK 6/00

WESTERN WOOD PRESERVERS INSTITUTE (WWPI)
7017 N.E. Highway 99 # 108
Vancover, WA 98665
Ph: 360-693-9958
Fax: 360-693-9967
Internet: http://www.wwpinstitute.org
e-mail: wwpi@teleport.com
AOK 5/01
LOK 6/00

-- End of Section --

SECTION TABLE OF CONTENTS

DIVISION 01 - GENERAL REQUIREMENTS

SECTION 01451A

CONTRACTOR QUALITY CONTROL

PART 1 GENERAL

1.1 REFERENCES
1.2 PAYMENT

PART 2 PRODUCTS (Not Applicable)

PART 3 EXECUTION

3.1 GENERAL REQUIREMENTS
3.2 QUALITY CONTROL PLAN
3.2.1 Content of the CQC Plan
3.2.2 Acceptance of Plan
3.2.3 Notification of Changes
3.3 COORDINATION MEETING
3.4 QUALITY CONTROL ORGANIZATION
3.4.1 Personnel Requirements
3.4.2 CQC System Manager
3.4.3 Additional Requirement
3.4.4 Organizational Changes
3.5 SUBMITTALS AND DELIVERABLES
3.6 CONTROL
3.6.1 Preparatory Phase
3.6.2 Initial Phase
3.6.3 Follow-up Phase
3.6.4 Additional Preparatory and Initial Phases
3.7 TESTS
3.7.1 Testing Procedure
3.7.2 Testing Laboratories
3.7.2.1 Capability Check
3.7.2.2 Capability Recheck
3.7.3 Onsite Laboratory
3.7.4 Furnishing or Transportation of Samples for Testing
3.8 COMPLETION INSPECTION
3.8.1 Punch-Out Inspection
3.8.2 Pre-Final Inspection
3.8.3 Final Acceptance Inspection
3.9 DOCUMENTATION
3.10 NOTIFICATION OF NONCOMPLIANCE

-- End of Section Table of Contents --

SECTION 01451A

CONTRACTOR QUALITY CONTROL

PART 1 GENERAL

1.1 REFERENCES

The publications listed below form a part of this specification to the extent referenced. The publications are referred to in the text by basic designation only.

AMERICAN SOCIETY FOR TESTING AND MATERIALS (ASTM)

ASTM D 3740	(2001) Minimum Requirements for Agencies Engaged in the Testing and/or Inspection of Soil and Rock as Used in Engineering Design and Construction
ASTM E 329	(2000b) Agencies Engaged in the Testing and/or Inspection of Materials Used in Construction

1.2 PAYMENT

Separate payment will not be made for providing and maintaining an effective Quality Control program, and all costs associated therewith shall be included in the applicable unit prices or lump-sum prices contained in the Bidding Schedule.

PART 2 PRODUCTS (Not Applicable)

PART 3 EXECUTION

3.1 GENERAL REQUIREMENTS

The Contractor is responsible for quality control and shall establish and maintain an effective quality control system in compliance with the Contract Clause titled "Inspection of Construction." The quality control system shall consist of plans, procedures, and organization necessary to produce an end product which complies with the contract requirements. The system shall cover all construction operations, both onsite and offsite, and shall be keyed to the proposed construction sequence. The site project superintendent will be held responsible for the quality of work on the job and is subject to removal by the Contracting Officer for non-compliance with the quality requirements specified in the contract. The site project superintendent in this context shall be the highest level manager responsible for the overall construction activities at the site, including quality and production. The site project superintendent shall maintain a

physical presence at the site at all times, except as otherwise acceptable to the Contracting Officer, and shall be responsible for all construction and construction related activities at the site.

3.2 QUALITY CONTROL PLAN

The Contractor shall furnish for review by the Government, not later than 10 days after receipt of notice to proceed, the Contractor Quality Control (CQC) Plan proposed to implement the requirements of the Contract Clause titled "Inspection of Construction." The plan shall identify personnel, procedures, control, instructions, tests, records, and forms to be used. The Government will consider an interim plan for the first 30 days of operation. Construction will be permitted to begin only after acceptance of the CQC Plan or acceptance of an interim plan applicable to the particular feature of work to be started. Work outside of the features of work included in an accepted interim plan will not be permitted to begin until acceptance of a CQC Plan or another interim plan containing the additional features of work to be started.

3.2.1 Content of the CQC Plan

The CQC Plan shall include, as a minimum, the following to cover all construction operations, both onsite and offsite, including work by subcontractors, fabricators, suppliers, and purchasing agents:

a. A description of the quality control organization, including a chart showing lines of authority and acknowledgment that the CQC staff shall implement the three phase control system for all aspects of the work specified. The staff shall include a CQC System Manager who shall report to the project superintendent.

b. The name, qualifications (in resume format), duties, responsibilities, and authorities of each person assigned a CQC function.

c. A copy of the letter to the CQC System Manager signed by an authorized official of the firm which describes the responsibilities and delegates sufficient authorities to adequately perform the functions of the CQC System Manager, including authority to stop work which is not in compliance with the contract. The CQC System Manager shall issue letters of direction to all other various quality control representatives outlining duties, authorities, and responsibilities. Copies of these letters shall also be furnished to the Government.

d. Procedures for scheduling, reviewing, certifying, and managing submittals, including those of subcontractors, offsite fabricators, suppliers, and purchasing agents. These procedures shall be in accordance with Section 01330 SUBMITTAL PROCEDURES.

e. Control, verification, and acceptance testing procedures for each specific test to include the test name, specification paragraph requiring test, feature of work to be tested, test frequency, and person responsible for each test. (Laboratory facilities will be

approved by the Contracting Officer.)

f. Procedures for tracking preparatory, initial, and follow-up control phases and control, verification, and acceptance tests including documentation.

g. Procedures for tracking construction deficiencies from identification through acceptable corrective action. These procedures shall establish verification that identified deficiencies have been corrected.

h. Reporting procedures, including proposed reporting formats.

i. A list of the definable features of work. A definable feature of work is a task which is separate and distinct from other tasks, has separate control requirements, and may be identified by different trades or disciplines, or it may be work by the same trade in a different environment. Although each section of the specifications may generally be considered as a definable feature of work, there are frequently more than one definable features under a particular section. This list will be agreed upon during the coordination meeting.

3.2.2 Acceptance of Plan

Acceptance of the Contractor's plan is required prior to the start of construction. Acceptance is conditional and will be predicated on satisfactory performance during the construction. The Government reserves the right to require the Contractor to make changes in his CQC Plan and operations including removal of personnel, as necessary, to obtain the quality specified.

3.2.3 Notification of Changes

After acceptance of the CQC Plan, the Contractor shall notify the Contracting Officer in writing of any proposed change. Proposed changes are subject to acceptance by the Contracting Officer.

3.3 COORDINATION MEETING

After the Preconstruction Conference, before start of construction, and prior to acceptance by the Government of the CQC Plan, the Contractor shall meet with the Contracting Officer or Authorized Representative and discuss the Contractor's quality control system. The CQC Plan shall be submitted for review a minimum of 10 calendar days prior to the Coordination Meeting. During the meeting, a mutual understanding of the system details shall be developed, including the forms for recording the CQC operations, control activities, testing, administration of the system for both onsite and offsite work, and the interrelationship of Contractor's Management and control with the Government's Quality Assurance. Minutes of the meeting shall be prepared by the Government and signed by both the Contractor and the Contracting Officer. The minutes shall become a part of the contract file. There may be occasions when subsequent conferences will be called by either party to reconfirm mutual understandings and/or address deficiencies

in the CQC system or procedures which may require corrective action by the Contractor.

3.4 QUALITY CONTROL ORGANIZATION

3.4.1 Personnel Requirements

The requirements for the CQC organization are a CQC System Manager and sufficient number of additional qualified personnel to ensure safety and contract compliance. The Safety and Health Manager shall receive direction and authority from the CQC System Manager and shall serve as a member of the CQC staff. Personnel identified in the technical provisions as requiring specialized skills to assure the required work is being performed properly will also be included as part of the CQC organization. The Contractor's CQC staff shall maintain a presence at the site at all times during progress of the work and have complete authority and responsibility to take any action necessary to ensure contract compliance. The CQC staff shall be subject to acceptance by the Contracting Officer. The Contractor shall provide adequate office space, filing systems and other resources as necessary to maintain an effective and fully functional CQC organization. Complete records of all letters, material submittals, show drawing submittals, schedules and all other project documentation shall be promptly furnished to the CQC organization by the Contractor. The CQC organization shall be responsible to maintain these documents and records at the site at all times, except as otherwise acceptable to the Contracting Officer.

3.4.2 CQC System Manager

The Contractor shall identify as CQC System Manager an individual within the onsite work organization who shall be responsible for overall management of CQC and have the authority to act in all CQC matters for the Contractor. The CQC System Manager shall be an individual with experience on construction projects similar to this project. This CQC System Manager shall be on the site at all times during construction and shall be employed by the prime Contractor. The CQC System Manager shall not be the Site Project Superintendent but may be the Site Safety and Health Manager. An alternate for the CQC System Manager shall be identified in the plan to serve in the event of the System Manager's absence. The requirements for the alternate shall be the same as for the designated CQC System Manager.

3.4.3 Additional Requirement

The CQC System Manager shall have completed the course entitled "Construction Quality Management For Contractors".

3.4.4 Organizational Changes

The Contractor shall maintain the CQC staff at full strength at all times. When it is necessary to make changes to the CQC staff, the Contractor shall revise the CQC Plan to reflect the changes and submit the changes to the Contracting Officer for acceptance.

3.5 SUBMITTALS AND DELIVERABLES

Submittals, if needed, shall be made as specified in Section 01330 SUBMITTAL PROCEDURES. The CQC organization shall be responsible for certifying that all submittals and deliverables are in compliance with the contract requirements.

3.6 CONTROL

Contractor Quality Control is the means by which the Contractor ensures that the construction, to include that of subcontractors and suppliers, complies with the requirements of the contract. At least three phases of control shall be conducted by the CQC System Manager for each definable feature of work as follows:

3.6.1 Preparatory Phase

This phase shall be performed prior to beginning work on each definable feature of work, after all required plans/documents/materials are approved/accepted, and after copies are at the work site. This phase shall include:

a. A review of each paragraph of applicable specifications, reference codes, and standards. A copy of those sections of referenced codes and standards applicable to that portion of the work to be accomplished in the field shall be made available by the Contractor at the preparatory inspection. These copies shall be maintained in the field and available for use by Government personnel until final acceptance of the work.

b. A review of the contract drawings.

c. A check to assure that all materials and/or equipment have been tested, submitted, and approved.

d. Review of provisions that have been made to provide required control inspection and testing.

e. Examination of the work area to assure that all required preliminary work has been completed and is in compliance with the contract.

f. A physical examination of required materials, equipment, and sample work to assure that they are on hand, conform to approved shop drawings or submitted data, and are properly stored.

g. A review of the appropriate activity hazard analysis to assure safety requirements are met.

h. Discussion of procedures for controlling quality of the work including repetitive deficiencies. Document construction tolerances and workmanship standards for that feature of work.

i. A check to ensure that the portion of the plan for the work to be performed has been accepted by the Contracting Officer.

j. Discussion of the initial control phase.

k. The Government shall be notified at least 48 hours in advance of beginning the preparatory control phase. This phase shall include a meeting conducted by the CQC System Manager and attended by the superintendent, other CQC personnel (as applicable), and the foreman responsible for the definable feature. The results of the preparatory phase actions shall be documented by separate minutes prepared by the CQC System Manager and attached to the daily CQC report. The Contractor shall instruct applicable workers as to the acceptable level of workmanship required in order to meet contract specifications.

3.6.2 Initial Phase

This phase shall be accomplished at the beginning of a definable feature of work. The following shall be accomplished:

a. A check of work to ensure that it is in full compliance with contract requirements. Review minutes of the preparatory meeting.

b. Verify adequacy of controls to ensure full contract compliance. Verify required control inspection and testing.

c. Establish level of workmanship and verify that it meets minimum acceptable workmanship standards. Compare with required sample panels as appropriate.

d. Resolve all differences.

e. Check safety to include compliance with and upgrading of the safety plan and activity hazard analysis. Review the activity analysis with each worker.

f. The Government shall be notified at least 48 hours in advance of beginning the initial phase. Separate minutes of this phase shall be prepared by the CQC System Manager and attached to the daily CQC report. Exact location of initial phase shall be indicated for future reference and comparison with follow-up phases.

g. The initial phase should be repeated for each new crew to work onsite, or any time acceptable specified quality standards are not being met.

3.6.3 Follow-up Phase

Daily checks shall be performed to assure control activities, including control testing, are providing continued compliance with contract requirements, until completion of the particular feature of work. The checks shall be made a matter of record in the CQC documentation. Final follow-up checks shall be conducted and all deficiencies corrected prior to the start of additional features of work which may be affected by the deficient work. The Contractor shall not build upon nor conceal non-conforming work.

3.6.4 Additional Preparatory and Initial Phases

Additional preparatory and initial phases shall be conducted on the same definable features of work if: the quality of on-going work is unacceptable; if there are changes in the applicable CQC staff, onsite production supervision or work crew; if work on a definable feature is resumed after a substantial period of inactivity; or if other problems develop.

3.7 TESTS

3.7.1 Testing Procedure

The Contractor shall perform specified or required tests to verify that control measures are adequate to provide a product which conforms to contract requirements. Upon request, the Contractor shall furnish to the Government duplicate samples of test specimens for possible testing by the Government. Testing includes operation and/or acceptance tests when specified. The Contractor shall procure the services of a Corps of Engineers approved testing laboratory or establish an approved testing laboratory at the project site. The Contractor shall perform the following activities and record and provide the following data:

a. Verify that testing procedures comply with contract requirements.

b. Verify that facilities and testing equipment are available and comply with testing standards.

c. Check test instrument calibration data against certified standards.

d. Verify that recording forms and test identification control number system, including all of the test documentation requirements, have been prepared.

e. Results of all tests taken, both passing and failing tests, shall be recorded on the CQC report for the date taken. Specification paragraph reference, location where tests were taken, and the sequential control number identifying the test shall be given. If approved by the Contracting Officer, actual test reports may be submitted later with a reference to the test number and date taken. An information copy of tests performed by an offsite or commercial test facility shall be provided directly to the Contracting Officer. Failure to submit timely test reports as stated may result in nonpayment for related work performed and disapproval of the test facility for this contract.

3.7.2 Testing Laboratories

3.7.2.1 Capability Check

The Government reserves the right to check laboratory equipment in the proposed laboratory for compliance with the standards set forth in the contract specifications and to check the laboratory technician's testing

procedures and techniques. Laboratories utilized for testing soils, concrete, asphalt, and steel shall meet criteria detailed in ASTM D 3740 and ASTM E 329.

3.7.2.2 Capability Recheck

If the selected laboratory fails the capability check, the Contractor will be assessed a charge of $500.00 to reimburse the Government for each succeeding recheck of the laboratory or the checking of a subsequently selected laboratory. Such costs will be deducted from the contract amount due the Contractor.

3.7.3 Onsite Laboratory

The Government reserves the right to utilize the Contractor's control testing laboratory and equipment to make assurance tests, and to check the Contractor's testing procedures, techniques, and test results at no additional cost to the Government.

3.7.4 Furnishing or Transportation of Samples for Testing

Costs incidental to the transportation of samples or materials shall be borne by the Contractor. Samples of materials for test verification and acceptance testing by the Government shall be delivered to a quality assurance laboratory at an address to be determined.

Coordination for each specific test, exact delivery location, and dates will be made through the Project Office.

3.8 COMPLETION INSPECTION

3.8.1 Punch-Out Inspection

Near the end of the work, or any increment of the work established by a time stated in the Special Clause, "Commencement, Prosecution, and Completion of Work", or by the specifications, the CQC Manager shall conduct an inspection of the work. A punch list of items which do not conform to the approved drawings and specifications shall be prepared and included in the CQC documentation, as required by paragraph DOCUMENTATION. The list of deficiencies shall include the estimated date by which the deficiencies will be corrected. The CQC System Manager or staff shall make a second inspection to ascertain that all deficiencies have been corrected. Once this is accomplished, the Contractor shall notify the Government that the facility is ready for the Government Pre-Final inspection.

3.8.2 Pre-Final Inspection

The Government will perform the pre-final inspection to verify that the facility is complete and ready to be occupied. A Government Pre-Final Punch List may be developed as a result of this inspection. The Contractor's CQC System Manager shall ensure that all items on this list have been corrected before notifying the Government, so that a Final inspection with the customer can be scheduled. Any items noted on the Pre-Final inspection shall be corrected in a timely manner. These

inspections and any deficiency corrections required by this paragraph shall be accomplished within the time slated for completion of the entire work or any particular increment of the work if the project is divided into increments by separate completion dates.

3.8.3 Final Acceptance Inspection

The Contractor's Quality Control Inspection personnel, plus the superintendent or other primary management person, and the Contracting Officer's Representative shall be in attendance at the final acceptance inspection. Additional Government personnel including, but not limited to, those from the project's local sponsor may also be in attendance. The final acceptance inspection will be formally scheduled by the Contracting Officer based upon results of the Pre-Final inspection. Notice shall be given to the Contracting Officer at least 14 days prior to the final acceptance inspection and shall include the Contractor's assurance that all specific items previously identified to the Contractor as being unacceptable, along with all remaining work performed under the contract, will be complete and acceptable by the date scheduled for the final acceptance inspection. Failure of the Contractor to have all contract work acceptably complete for this inspection will be cause for the Contracting Officer to bill the Contractor for the Government's additional inspection cost in accordance with the contract clause titled "Inspection of Construction".

3.9 DOCUMENTATION

The Contractor shall maintain current records providing factual evidence that required quality control activities and/or tests have been performed. These records shall include the work of subcontractors and suppliers and shall be on an acceptable form that includes, as a minimum, the following information:

a. Contractor/subcontractor and their area of responsibility.

b. Operating plant/equipment with hours worked, idle, or down for repair.

c. Work performed each day, giving location, description, and by whom. When Network Analysis (NAS) is used, identify each phase of work performed each day by NAS activity number.

d. Test and/or control activities performed with results and references to specifications/drawings requirements. The control phase shall be identified (Preparatory, Initial, Follow-up). List of deficiencies noted, along with corrective action.

e. Quantity of materials received at the site with statement as to acceptability, storage, and reference to specifications/drawings requirements.

f. Submittals and deliverables reviewed, with contract reference, by whom, and action taken.

g. Offsite surveillance activities, including actions taken.

h. Job safety evaluations stating what was checked, results, and instructions or corrective actions.

i. Instructions given/received and conflicts in plans and/or specifications.

j. Contractor's verification statement.

These records shall indicate a description of trades working on the project; the number of personnel working; weather conditions encountered; and any delays encountered. These records shall cover both conforming and deficient features and shall include a statement that equipment and materials incorporated in the work and workmanship comply with the contract. The original and one copy of these records in report form shall be furnished to the Government daily within 24 hours after the date covered by the report, except that reports need not be submitted for days on which no work is performed. As a minimum, one report shall be prepared and submitted for every 7 days of no work and on the last day of a no work period. All calendar days shall be accounted for throughout the life of the contract. The first report following a day of no work shall be for that day only. Reports shall be signed and dated by the CQC System Manager. The report from the CQC System Manager shall include copies of test reports and copies of reports prepared by all subordinate quality control personnel.

3.10 NOTIFICATION OF NONCOMPLIANCE

The Contracting Officer will notify the Contractor of any detected noncompliance with the foregoing requirements. The Contractor shall take immediate corrective action after receipt of such notice. Such notice, when delivered to the Contractor at the work site, shall be deemed sufficient for the purpose of notification. If the Contractor fails or refuses to comply promptly, the Contracting Officer may issue an order stopping all or part of the work until satisfactory corrective action has been taken. No part of the time lost due to such stop orders shall be made the subject of claim for extension of time or for excess costs or damages by the Contractor.

-- End of Section --

This page was intentionally left blank for duplex printing.

SECTION TABLE OF CONTENTS

DIVISION 01 - GENERAL REQUIREMENTS

01580N

PROJECT IDENTIFICATION

12/01

PART 1 GENERAL

1.1 REFERENCES
1.2 PROJECT SIGN
1.2.1 Project Identification Signboard

PART 2 PRODUCTS

PART 3 EXECUTION

-- End of Section Table of Contents --

01580N

PROJECT IDENTIFICATION
12/01

PART 1 GENERAL

1.1 REFERENCES

The publication listed below form a part of this specification to the extent referenced. The publications are referred to in the text by the basic designation only.

AMERICAN WOOD-PRESERVERS' ASSOCIATION (AWPA)

AWPA C1	(2000) All Timber Products - Preservative Treatment by Pressure Processes
AWPA C2	(1996) Lumber, Timber, Bridge Ties and Mine Ties - Preservative Treatment by Pressure Processes

1.2 PROJECT SIGN

Within 15 days after the commencement of work, provide one project identification sign to be installed near Curry Road and the Indian Bend Wash at a location selected by the Contracting Officer. Construct the sign in accordance with project sign details and standards to be provided by the Government. Maintain the sign throughout the life of the project. Upon completion of the project, remove the sign from the site. The Government will supply the artworks required for logos and other graphic elements.

1.2.1 Project Identification Signboard

A project identification signboard shall be provided in accordance with the provisions of these specifications and the graphic layout and text to be provided by the Government.

a. The field of the sign shall consist of a 4 by 8 foot sheet of grade B-B medium density overlaid exterior plywood.

b. Lumber shall be B or Better Southern pine, pressure-preservative treated in accordance with AWPA C1 and AWPA C2. Nails shall be aluminum or galvanized steel.

c. The entire signboard and supports shall be given one coat of exterior alkyd primer and two coats of exterior alkyd enamel paint. The lettering and sign work shall be performed by a skilled sign painter using paint known in the trade as bulletin colors. The colors, lettering sizes, and lettering styles shall be as indicated. Where preservative-treated lumber is required,

utilize only cured pressure-treated wood which has had the chemicals leached from the surface of the wood prior to painting.

e. Sign paint colors shall be in accordance with the standards to be provided by the Government.

PART 2 PRODUCTS

Not used.

PART 3 EXECUTION

Not used.

-- End of Section --

This page was intentionally left blank for duplex printing.

SECTION TABLE OF CONTENTS

DIVISION 01 - GENERAL REQUIREMENTS

SECTION 01702

AS-BUILT DRAWINGS

01/02

PART 1 GENERAL

1.1 REFERENCES
1.2 SUBMITTALS

PART 2 PRODUCTS (Not Applicable)

PART 3 EXECUTION

3.1 AS-BUILT FIELD DATA
3.1.1 General
3.1.2 Preliminary As-Built Drawings
3.1.2.1 Submittal of the As-Built Field Data
3.2 AS-BUILT ELECTRONIC FILE DRAWINGS
3.2.1 General
3.2.2 Original Files
3.2.3 Electronic File Submittal Requirements
3.2.3.1 File Submittals
3.2.3.2 Drawing Format
3.2.3.3 Electronic File Deliverable Media
3.3 FINAL AS-BUILT DRAWINGS

-- End of Section Table of Contents --

SECTION 01702

AS-BUILT DRAWINGS
01/02

PART 1 GENERAL

1.1 REFERENCES

The publications listed below form a part of this specification to the extent referenced. The publications are referred to in the text by basic designation only.

U.S. ARMY ENGINEER RESEARCH AND DEVELOPMENT CENTER (ERDC)

ERDC/ITL TR-01-6 (2001) A/E/C Cadd Standard

1.2 SUBMITTALS

Government approval is required for submittals with a "G" designation; submittals not having a "G" designation are for information only. When used, a designation following the "G" designation identifies the office that will review the submittal for the Government. The following shall be submitted in accordance with Section 01330 SUBMITTAL PROCEDURES:

SD-11 Closeout Submittals

Submittal of the As-Built Field Data; G

PART 2 PRODUCTS (Not Applicable)

PART 3 EXECUTION

3.1 AS-BUILT FIELD DATA

3.1.1 General

The Contractor shall prepare and furnish the as-built drawings for the project. The as-built drawings shall be a record of the construction as installed and completed by the Contractor. They shall include all the information shown on the contract set of drawings and a record of all deviations, modifications, or changes from those drawings, however minor, which were incorporated in the work, all additional work not appearing on the contract drawings, and all changes which are made after final inspection of the contract work. In event the Contractor accomplishes additional work which changes the as-built conditions of the facility after submission of the as-built drawings, the Contractor shall furnish revised and/or additional drawings as required to depict as-built conditions. The requirements for these additional drawings will be the same as for the

as-built drawings included in the original submission. The drawings shall show the following information, but not be limited thereto:

(a) The location and description of any utility lines or other installations of any kind or description known to exist within the construction area. The location includes dimensions to permanent features.

(b) The location and dimensions of any changes within the building or structures.

(c) Correct grade or alignment of dam embankment, roads, channels, structures or utilities if any changes were made from contract plans.

(d) Correct elevations if changes were made in site grading or placement of materials in the dam embankment.

(e) Changes in details of design or additional information obtained from working drawings specified to be prepared and/or furnished by the Contractor including but not limited to fabrication, erection, installation plans and placing details, pipe sizes, dimensions of equipment foundations, etc.

(f) The topography and grades of all drainage installed or affected as a part of the project construction.

(g) All changes or modifications which result from the final inspection.

(h) Where contract drawings or specifications allow options, only the option actually used in the construction shall be shown on the as-built drawings. The option not used shall be deleted.

3.1.2 Preliminary As-Built Drawings

The Contractor shall maintain one (1) set of full size, blueline prints marked up in red to show the as-built conditions. This set of as-built prints shall be kept current and available at the job site at all times. All changes from what is shown on the contract plans, whether it be from changes requested by the Contracting Officer or resulting from additional information which might be uncovered in the course of construction, shall be accurately and neatly recorded as they occur by means of details and notes. The marked-up as-built prints will be jointly inspected for accuracy and completeness by the Contracting Officer and Contractor prior to submission of each monthly pay estimate. Failure to keep the As-Built Field Data current shall be sufficient justification to withhold a retained percentage from the monthly pay estimate. Information to be included on these preliminary drawings shall conform to the requirements as stated above. Any and all as-built modifications shall be reflected on all sheets affected by the modifications.

3.1.2.1 Submittal of the As-Built Field Data

One (1) full size set of marked up drawings with the as-built field data shall be submitted to the Contracting Officer for review and approval a minimum of 20 calendar days prior to the date of final inspection. If review of the preliminary as-built drawings reveals errors and/or omissions, the drawings will be returned to the Contractor for corrections. The Contractor shall make all corrections and return the drawings to the Contracting Officer within 10 calendar days of receipt.

3.2 AS-BUILT ELECTRONIC FILE DRAWINGS

3.2.1 General

No later than 30 days after final acceptance a complete set of as-built drawings shall be submitted in Intergraph MicroStation electronic file format. The as-built drawings shall be done in a quality equal to that of the originals. Line work, line weights, and lettering, and use of symbols shall be the same as the original line work, line weights, and lettering, and symbols. If additional drawings are required they shall be prepared in electronic file format under the same guidance. When final revisions have been completed, each drawings shall be identified with the words "AS-BUILT" in block letters at least 3/8-inch high placed above the title block if space permits, or if not, below the title block between the border and the trim line. The date of completion and the words "REVISED AS-BUILT" shall be placed in the revision block above the latest revision notation.

3.2.2 Original Files

Upon Contractor's request the Government will provide the Contractor one set of Intergraph MicroStation electronic file format contract drawings, to be used for as-built drawings. The electronic file drawings will be available on CD-ROM media, 3-1/2 inch high density magnetic disks, or an 8-mm data cartridge (Contractor's choice).

3.2.3 Electronic File Submittal Requirements

3.2.3.1 File Submittals

The MicroStation electronic file(s) deliverable shall be in MicroStation version 5.0 ‘DGN' binary format. All support files required to display or plot the file(s) in the same manner as they were developed shall be delivered along with the files. These files include but are not limited to Font Libraries, Pen Tables, and Referenced files.

3.2.3.2 Drawing Format

Layering shall be performed in accordance with the Tri-Service CADD/GIS Technology Center's Architectural, Engineering and Construction (A/E/C) CADD Standards manual, ERDC/ITL TR-01-6, version 2.0. An explanatory list of which layer is used at which drawing and an explanatory list of all layers which do not conform to the guidelines shall be provided with each submittal.

3.2.3.3 Electronic File Deliverable Media

All electronic files shall be submitted on CD-ROM media. Two complete sets of disks shall be submitted along with one complete set of prints taken from the disks. The electronic files shall be delivered on ISO 9660 format CD-ROM media. Due to the limited ability to mark on CD-ROM media, only the Contractor's firm name, project name and location, submittal type (AS-BUILT) and date will be required. Each submittal shall be accompanied by a hard copy transmittal sheet that contains the above information along with a description of each file provided in the submittal.

3.3 FINAL AS-BUILT DRAWINGS

The final as-built record drawings shall be completed and returned together with the approved preliminary as-built drawings to the Contracting Officer within 30 calendar days of final acceptance. The Contracting Officer will review all final as-built record drawings for accuracy and conformance to the drafting standards and other requirements contained in DIVISION 1 GENERAL REQUIREMENTS. The drawings shall be returned to the Contractor if corrections are necessary. The Contractor shall make all corrections and shall return the drawings to the Contracting Officer within 7 calendar days of receipt. Upon final approval, the Contractor shall furnish two (2) full size sets and two (2) half size sets of the final as-built plans on reproducible mylars, and the electronic as-built project files. All project files, whether revised or not, shall be provided to the Contracting Officer.

-- End of Section --

This page was intentionally left blank for duplex printing.

SECTION TABLE OF CONTENTS

DIVISION 02 - SITE WORK

SECTION 02230A

CLEARING AND GRUBBING

09/02

PART 1 GENERAL

1.1 DEFINITIONS
1.1.1 Clearing
1.1.2 Grubbing

PART 2 PRODUCTS (Not Applicable)

PART 3 EXECUTION

3.1 CLEARING
3.2 GRUBBING
3.3 DISPOSAL OF MATERIALS
3.3.1 Disposal of Cleared and Grubbed Materials

-- End of Section Table of Contents --

SECTION 02230A

CLEARING AND GRUBBING
09/02

PART 1 GENERAL

1.1 DEFINITIONS

1.1.1 Clearing

Clearing shall consist of the felling, trimming, and cutting of trees into sections and the satisfactory disposal of the trees and other vegetation designated for removal, including down timber, snags, brush, and rubbish occurring in the areas to be cleared.

1.1.2 Grubbing

Grubbing shall consist of the removal and disposal of stumps, roots larger than 3 inches in diameter, and matted roots from the designated grubbing areas.

PART 2 PRODUCTS

(Not Applicable)

PART 3 EXECUTION

3.1 CLEARING

Trees, stumps, roots, brush, and other vegetation in areas to be cleared shall be cut off flush with or below the original ground surface, except such trees and vegetation as may be indicated or directed to be left standing. Trees designated to be left standing within the cleared areas shall be trimmed of dead branches 1-1/2 inches or more in diameter and shall be trimmed of all branches the heights indicated or directed. Limbs and branches to be trimmed shall be neatly cut close to the bole of the tree or main branches. Trees and vegetation to be left standing shall be protected from damage incident to clearing, grubbing, and construction operations by the erection of barriers or by such other means as the circumstances require. Clearing shall also include the removal and disposal of structures that obtrude, encroach upon, or otherwise obstruct the work.

3.2 GRUBBING

Material to be grubbed, together with logs and other organic debris notsuitable for project purposes, shall be removed to a depth of not less than 12 inches below the original surface level of the ground in areas to be graded, planted, seeded, and/or paved. Depressions made by grubbing shall be filled with suitable material and compacted to make the surface conform to the original adjacent surface of the ground.

3.3 DISPOSAL OF MATERIALS

3.3.1 Disposal of Cleared and Grubbed Materials

Logs, stumps, roots, brush, rotten wood, and other refuse from the clearing and grubbing operations shall be disposed of in a legal manner.

-- End of Section --

This page was intentionally left blank for duplex printing.

SECTION TABLE OF CONTENTS

DIVISION 02 - SITE WORK

SECTION 02300A

EARTHWORK

PART 1 GENERAL

1.1 REFERENCES
1.2 DEFINITIONS
1.2.1 Satisfactory Materials
1.2.2 Unsatisfactory Materials
1.2.3 Cohesionless and Cohesive Materials
1.2.4 Degree of Compaction
1.2.5 Topsoil
1.3 SUBMITTALS
1.4 CLASSIFICATION OF EXCAVATION
1.5 BLASTING
1.6 UTILIZATION OF EXCAVATED MATERIALS

PART 2 PRODUCTS (Not Applicable)

PART 3 EXECUTION

3.1 STRIPPING OF TOPSOIL
3.2 GENERAL EXCAVATION
3.2.1 Ditches, Gutters, and Channel Changes
3.2.2 Drainage Structures
3.3 SELECTION OF BORROW MATERIAL
3.4 BACKFILL
3.5 PREPARATION OF GROUND SURFACE FOR EMBANKMENTS
3.5.1 General Requirements
3.6 EMBANKMENTS
3.6.1 Earth Embankments
3.7 SUBGRADE PREPARATION
3.7.1 Construction
3.7.2 Compaction
3.8 FINISHING
3.9 PLACING TOPSOIL
3.10 TESTING
3.10.1 Fill and Backfill Material Gradation
3.10.2 In-Place Densities
3.10.3 Check Tests on In-Place Densities
3.10.4 Moisture Contents
3.10.5 Optimum Moisture and Laboratory Maximum Density
3.10.6 Tolerance Tests for Subgrades
3.11 SUBGRADE AND EMBANKMENT PROTECTION

-- End of Section Table of Contents --

SECTION 02300A

EARTHWORK
09/02

PART 1 GENERAL

1.1 REFERENCES

The publications listed below form a part of this specification to the extent referenced. The publications are referred to in the text by basic designation only.

AMERICAN ASSOCIATION OF STATE HIGHWAY AND TRANSPORTATION OFFICIALS (AASHTO)

AASHTO T 180	(1997) Moisture-Density Relations of Soils Using a 10-lb Rammer and an 18-in Drop
AASHTO T 224	(1996) Correction for Coarse Particles in the Soil Compaction Test

AMERICAN SOCIETY FOR TESTING AND MATERIALS (ASTM)

ASTM C 136	(1996a) Sieve Analysis of Fine and Coarse Aggregates
ASTM D 422	(1963; R 1998) Particle-Size Analysis of Soils
ASTM D 1140	(1997) Amount of Material in Soils Finer than the No. 200 Sieve
ASTM D 1556	(2000) Density and Unit Weight of Soil in Place by the Sand-Cone Method
ASTM D 1557	(1998) Laboratory Compaction Characteristics of Soil Using Modified Effort (56,000 ft-lbs/cu. ft.)
ASTM D 2167	(1994) Density and Unit Weight of Soil in Place by the Rubber Balloon Method
ASTM D 2487	(2000) Classification of Soils for Engineering Purposes (Unified Soil Classification System)
ASTM D 2922	(1996el) Density of Soil and Soil-Aggregate in Place by Nuclear Methods (Shallow Depth)
ASTM D 2937	(1994) Density of Soil in Place by the Drive-Cylinder Method

ASTM D 3017	(1988; R 1996el) Water Content of Soil and Rock in Place by Nuclear Methods (Shallow Depth)
ASTM D 4318	(2000) Liquid Limit, Plastic Limit, and Plasticity Index of Soils

1.2 DEFINITIONS

1.2.1 Satisfactory Materials

Satisfactory materials shall comprise any materials classified by ASTM D 2487 as GW, GP, GM, GP-GM, GW-GM, GC, GP-GC, GM-GC, SW, SP, SM, SW-SM, SC, SW-SC, SP-SM, SP-SC, CL, ML, CL-ML. Satisfactory materials for grading shall be comprised of stone less than 3 inches in any dimension.

1.2.2 Unsatisfactory Materials

Materials, which do not comply with the requirements for satisfactory materials, are unsatisfactory. Unsatisfactory materials also include man-made fills; trash; refuse; backfills from previous construction; and material classified as satisfactory which contains root and other organic matter or frozen material. The Contracting Officer shall be notified of any contaminated materials.

1.2.3 Cohesionless and Cohesive Materials

Cohesionless materials include materials classified in ASTM D 2487 as GW, GP, SW, and SP. Cohesive materials include materials classified as GC, SC, ML, and CL. Materials classified as GM and SM will be identified as cohesionless only when the fines are nonplastic. Testing required for classifying materials shall be in accordance with ASTM D 4318, ASTM C 136, ASTM D 422, and ASTM D 1140.

1.2.4 Degree of Compaction

Degree of compaction required, except as noted in the second sentence, is expressed as a percentage of the maximum density obtained by the test procedure presented in ASTM D 1557 abbreviated as a percent of laboratory maximum density. Since ASTM D 1557 applies only to soils that have 30 percent or less by weight of their particles retained on the 3/4 inch sieve, the degree of compaction for material having more than 30 percent by weight of their particles retained on the 3/4 inch sieve shall be expressed as a percentage of the maximum density in accordance with AASHTO T 180 Method D and corrected with AASHTO T 224. To maintain the same percentage of coarse material, the "remove and replace" procedure as described in the NOTE 8 in Paragraph 7.2 of AASHTO T 180 shall be used.

1.2.5 Topsoil

Material suitable for topsoils obtained from [excavations] is defined as the top 6 inches of soil.

1.3 SUBMITTALS

Government approval is required for submittals with a "G" designation; submittals not having a "G" designation are for information only. The following shall be submitted in accordance with Section 01330 SUBMITTAL PROCEDURES:

SD-06 Test Reports

Testing:

Within 24 hours of conclusion of physical tests, 3 copies of test results, including calibration curves and results of calibration tests.

SD-07 Certificates

Testing:

Qualifications of the commercial testing laboratory or Contractor's testing facilities.

1.4 CLASSIFICATION OF EXCAVATION

No consideration will be given to the nature of the materials, and all excavation will be designated as unclassified excavation.

1.5 BLASTING

Blasting will not be permitted.

1.6 UTILIZATION OF EXCAVATED MATERIALS

Unsatisfactory materials removed from excavations shall be disposed of in designated or approved waste disposal or spoil areas. Satisfactory material removed from excavations shall be used, insofar as practicable, in the construction of fills, embankments, subgrades, shoulders, bedding (as backfill), and for similar purposes. No satisfactory excavated material shall be wasted without specific written authorization. Satisfactory material authorized to be wasted shall be disposed of in a legal manner. Coarse rock from excavations shall be stockpiled and used for constructing slopes or embankments and for protecting against erosion. No excavated material shall be disposed of to obstruct the flow of any stream, endanger a partly finished structure, impair the efficiency or appearance of any structure, or be detrimental to the completed work in any way.

PART 2 PRODUCTS

(Not Applicable)

PART 3 EXECUTION

3.1 STRIPPING OF TOPSOIL

Where indicated or directed, topsoil shall be stripped to a depth of 6

inches. Topsoil shall be spread on areas already graded and prepared for topsoil, or transported and deposited in stockpiles convenient to areas that are to receive application of the topsoil later, or at locations indicated or specified. Topsoil shall be kept separate from other excavated materials, brush, litter, objectionable weeds, roots, stones larger than 2 inches in diameter, and other materials that would interfere with planting and maintenance operations. Any surplus of topsoil from excavations and grading shall be removed from the site.

3.2 GENERAL EXCAVATION

The Contractor shall perform excavation of every type of material encountered within the limits of the project to the lines, grades, and elevations indicated and as specified. Grading shall be in conformity with the typical sections shown and the tolerances specified in paragraph FINISHING. Satisfactory excavated materials shall be transported to and placed in fill or embankment within the limits of the work. Unsatisfactory materials encountered within the limits of the work shall be excavated below grade and replaced with satisfactory materials as directed. Such excavated material and the satisfactory material ordered as replacement shall be included in excavation. Surplus satisfactory and unsatisfactory excavated material not required for fill or embankment shall be disposed of in a legal manner. During construction, excavation and fill shall be performed in a manner and sequence that will provide proper drainage at all times. Material required for fill or embankment in excess of that produced by excavation within the grading limits shall be excavated from approved areas selected by the Contractor as specified.

3.2.1 Ditches, Gutters, and Channel Changes

Excavation of ditches, gutters, and channel changes shall be accomplished by cutting accurately to the cross sections, grades, and elevations shown. Ditches and gutters shall not be excavated below grades shown. Excessive open ditch or gutter excavation shall be backfilled with satisfactory, thoroughly compacted, material or with suitable stone or cobble to grades shown. Material excavated shall be disposed of as shown or as directed, except that in no case shall material be deposited less than 4 feet from the edge of a ditch. The Contractor shall maintain excavations free from detrimental quantities of leaves, brush, sticks, trash, and other debris until final acceptance of the work.

3.2.2 Drainage Structures

Excavations shall be made to the lines, grades, and elevations shown, or as directed. Trenches and foundation pits shall be of sufficient size to permit the placement and removal of forms for the full length and width of structure footings and foundations as shown. Rock or other hard foundation material shall be cleaned of loose debris and cut to a firm, level, stepped, or serrated surface. Loose disintegrated rock and thin strata shall be removed. When concrete or masonry is to be placed in an excavated area, the bottom of the excavation shall not be disturbed. Excavation to the final grade level shall not be made until just before the concrete or masonry is to be placed.

3.3 SELECTION OF BORROW MATERIAL

Obtain borrow material from off-site source if volume of suitable excavation material is inadequate. The Contractor shall secure his own source of material and necessary permits to complete the project requirements. Borrow material shall be selected to meet the requirements and conditions of the particular fill or embankment for which it is to be used.

3.4 BACKFILL

Backfill adjacent to any and all types of structures shall be placed and compacted to at least 90 percent laboratory maximum density for all soils to prevent wedging action or eccentric loading upon or against the structure. Ground surface on which backfill is to be placed shall be prepared as specified in paragraph PREPARATION OF GROUND SURFACE FOR EMBANKMENTS. Compaction requirements for backfill materials shall also conform to the applicable portions of paragraphs PREPARATION OF GROUND SURFACE FOR EMBANKMENTS, EMBANKMENTS, and SUBGRADE PREPARATION and Section 02316a EXCAVATION, TRENCHING, AND BACKFILLING FOR UTILITIES SYSTEMS. Compaction shall be accomplished by sheepsfoot rollers, pneumatic-tired rollers, steel-wheeled rollers, vibratory compactors, or other approved equipment.

3.5 PREPARATION OF GROUND SURFACE FOR EMBANKMENTS

3.5.1 General Requirements

Ground surface on which fill is to be placed shall be stripped of live, dead, or decayed vegetation, rubbish, debris, and other unsatisfactory material; plowed, disked, or otherwise broken up to a depth of 1 foot; pulverized; moistened or aerated as necessary; thoroughly mixed; and compacted to at least 90 percent laboratory maximum density for cohesive materials or 95 percent laboratory maximum density for cohesionless materials. Compaction shall be accomplished by sheepsfoot rollers, pneumatic-tired rollers, steel-wheeled rollers, vibratory compactors, or other approved equipment. The prepared ground surface shall be scarified and moistened or aerated as required just prior to placement of embankment materials to assure adequate bond between embankment material and the prepared ground surface.

3.6 EMBANKMENTS

3.6.1 Earth Embankments

Earth embankments shall be constructed from satisfactory materials free of organic material and rocks with any dimension greater than 3 inches. The material shall be placed in successive horizontal layers of loose material not more than 8 inches in depth. Each layer shall be spread uniformly on a soil surface that has been moistened or aerated as necessary, and scarified or otherwise broken up so that the fill will bond with the surface on which it is placed. After spreading, each layer shall be plowed, disked, or otherwise broken up; moistened or aerated as necessary; thoroughly mixed; and compacted to at least 90 percent laboratory maximum density for all

soils. Compaction requirements for the upper portion of earth embankments forming subgrade for pavements shall be identical with those requirements specified in paragraph SUBGRADE PREPARATION. Compaction shall be accomplished by sheepsfoot rollers, pneumatic-tired rollers, steel-wheeled rollers, vibratory compactors, or other approved equipment.

3.7 SUBGRADE PREPARATION

3.7.1 Construction

Subgrade shall be shaped to line, grade, and cross section, and compacted as specified. This operation shall include plowing, disking, and any moistening or aerating required to obtain specified compaction. Soft or otherwise unsatisfactory material shall be removed and replaced with satisfactory excavated material or other approved material as directed. Rock encountered in the cut section shall be excavated to a depth of 6 inches below finished grade for the subgrade. Low areas resulting from removal of unsatisfactory material or excavation of rock shall be brought up to required grade with satisfactory materials, and the entire subgrade shall be shaped to line, grade, and cross section and compacted as specified. The elevation of the finish subgrade shall not vary more than 0.05 foot from the established grade and cross section.

3.7.2 Compaction

Compaction shall be accomplished by sheepsfoot rollers, pneumatic-tired rollers, steel-wheeled rollers, vibratory compactors, or other approved equipment. Except for paved areas and railroads, each layer of the embankment shall be compacted to at least 90 percent of laboratory maximum density.

3.8 FINISHING

The surface of excavations, embankments, and subgrades shall be finished to a smooth and compact surface in accordance with the lines, grades, and cross sections or elevations shown. The degree of finish for graded areas shall be within 0.1 foot of the grades and elevations indicated except that the degree of finish for subgrades shall be specified in paragraph SUBGRADE PREPARATION. Gutters and ditches shall be finished in a manner that will result in effective drainage. The surface of areas to be turfed shall be finished to a smoothness suitable for the application of turfing materials.

3.9 PLACING TOPSOIL

On areas to receive topsoil, the compacted subgrade soil shall be scarified to a 2 inch depth for bonding of topsoil with subsoil. Topsoil then shall be spread evenly to a thickness of 6 inches and graded to the elevations and slopes shown. Topsoil shall not be spread when excessively wet or dry.

3.10 TESTING

Testing shall be performed by an approved commercial testing laboratory or

by the Contractor subject to approval. If the Contractor elects to establish testing facilities, no work requiring testing will be permitted until the Contractor's facilities have been inspected and approved by the Contracting Officer. Field in-place density shall be determined in accordance with ASTM D 1556 ASTM D 2167 ASTM D 2922. When ASTM D 2922 is used, the calibration curves shall be checked and adjusted using only the sand cone method as described in ASTM D 1556. ASTM D 2922 results in a wet unit weight of soil and when using this method ASTM D 3017 shall be used to determine the moisture content of the soil. The calibration curves furnished with the moisture gauges shall also be checked along with density calibration checks as described in ASTM D 3017; the calibration checks of both the density and moisture gauges shall be made at the beginning of a job on each different type of material encountered and at intervals as directed by the Contracting Officer. ASTM D 2937, Drive Cylinder Method shall be used only for soft, fine-grained, cohesive soils. When test results indicate, as determined by the Contracting Officer, that compaction is not as specified, the material shall be removed, replaced and re-compacted to meet specification requirements. Tests on re-compacted areas shall be performed to determine conformance with specification requirements. The following number of tests, if performed at the appropriate time, will be the minimum acceptable for each type operation.

3.10.1 Fill and Backfill Material Gradation

One test per 1000 cubic yards stockpiled or in-place source material. Gradation of fill and backfill material shall be determined in accordance with ASTM D 422.

3.10.2 In-Place Densities

a. One test per 2500 square feet, or fraction thereof, of each lift of fill or backfill areas compacted by other than hand-operated machines.

b. One test per 2500 square feet, or fraction thereof, of each lift of fill or backfill areas compacted by hand-operated machines.

3.10.3 Check Tests on In-Place Densities

If ASTM D 2922 is used, in-place densities shall be checked by ASTM D 1556 as follows:

a. One check test per lift for each 5000 square feet, or fraction thereof, of each lift of fill or backfill compacted by other than hand-operated machines.

b. One check test per lift for each 5000 square feet, of fill or backfill areas compacted by hand-operated machines.

c. One check test per lift for each 5000 linear feet, or fraction thereof, of embankment or backfill for [roads] [airfields].

d. One check test per lift for each 5000 linear feet, or fraction thereof, of embankment or backfill for railroads.

3.10.4 Moisture Contents

In the stockpile, excavation, or borrow areas, a minimum of two tests per day per type of material or source of material being placed during stable weather conditions shall be performed. During unstable weather, tests shall be made as dictated by local conditions and approved by the Contracting Officer.

3.10.5 Optimum Moisture and Laboratory Maximum Density

Tests shall be made for each type material or source of material including borrow material to determine the optimum moisture and laboratory maximum density values. One representative test per 5000 cubic yards of fill and backfill, or when any change in material occurs which may affect the optimum moisture content or laboratory maximum density.

3.10.6 Tolerance Tests for Subgrades

Continuous checks on the degree of finish specified in paragraph SUBGRADE PREPARATION shall be made during construction of the subgrades.

3.11 SUBGRADE AND EMBANKMENT PROTECTION

During construction, embankments and excavations shall be kept shaped and drained. Ditches and drains along subgrade shall be maintained to drain effectively at all times. The finished subgrade shall not be disturbed by traffic or other operation and shall be protected and maintained by the Contractor in a satisfactory condition until ballast, subbase, base, or pavement is placed. The storage or stockpiling of materials on the finished subgrade will not be permitted. No subbase, base course, ballast, or pavement shall be laid until the subgrade has been checked and approved, and in no case shall subbase, base, surfacing, pavement, or ballast be placed on a muddy, spongy, or frozen subgrade.

-- End of Section --

SECTION TABLE OF CONTENTS

DIVISION 02 - SITE WORK

SECTION 02316A

EXCAVATION, TRENCHING, AND BACKFILLING FOR UTILITIES SYSTEMS

09/02

PART 1 GENERAL

1.1 REFERENCES
1.2 DEGREE OF COMPACTION
1.3 SUBMITTALS

PART 2 PRODUCTS

2.1 MATERIALS
2.1.1 Satisfactory Materials
2.1.2 Unsatisfactory Materials
2.1.3 Cohesionless and Cohesive Materials
2.1.4 Rock
2.1.5 Unyielding Material
2.1.6 Unstable Material
2.1.7 Select Granular Material
2.2 PLASTIC MARKING TAPE

PART 3 EXECUTION

3.1 EXCAVATION
3.1.1 Trench Excavation Requirements
3.1.1.1 Bottom Preparation
3.1.1.2 Removal of Unyielding Material
3.1.1.3 Removal of Unstable Material
3.1.1.4 Excavation for Appurtenances
3.1.1.5 Jacking, Boring, and Tunneling
3.1.2 Stockpiles
3.2 BACKFILLING AND COMPACTION
3.2.1 Trench Backfill
3.2.1.1 Replacement of Unyielding Material
3.2.1.2 Replacement of Unstable Material
3.2.1.3 Bedding and Backfill
3.3 SPECIAL REQUIREMENTS
3.3.1 Water Lines
3.3.2 Electrical Distribution System
3.3.3 Plastic Marking Tape
3.4 TESTING
3.4.1 Testing Facilities
3.4.2 Testing of Backfill Materials
3.4.3 Field Density Tests

3.4.4 Displacement of Sewers

-- End of Section Table of Contents --

SECTION 02316A

EXCAVATION, TRENCHING, AND BACKFILLING FOR UTILITIES SYSTEMS
09/02

PART 1 GENERAL

1.1 REFERENCES

The publications listed below form a part of this specification to the extent referenced. The publications are referred to in the text by basic designation only.

AMERICAN SOCIETY FOR TESTING AND MATERIALS (ASTM)

ASTM D 1556	(2000) Density and Unit Weight of Soil in Place by the Sand-Cone Method
ASTM D 1557	(1998) Laboratory Compaction Characteristics of Soil Using Modified Effort (56,000 ft-lbs/cu. ft.)
ASTM D 2167	(1994) Density and Unit Weight of Soil in Place by the Rubber Balloon Method
ASTM D 2487	(2000) Classification of Soils for Engineering Purposes (Unified Soil Classification System)
ASTM D 2922	(1996el) Density of Soil and Soil-Aggregate in Place by Nuclear Methods (Shallow Depth)
ASTM D 3017	(1988; R 1996el) Water Content of Soil and Rock in Place by Nuclear Methods (Shallow Depth)

1.2 DEGREE OF COMPACTION

Degree of compaction shall be expressed as a percentage of the maximum density obtained by the test procedure presented in ASTM D 1557.

1.3 SUBMITTALS

Government approval is required for submittals with a "G" designation; submittals not having a "G" designation are for information only. The following shall be submitted in accordance with Section 01330 SUBMITTAL PROCEDURES:

SD-06 Test Reports
Field Density Tests

Testing of Backfill Materials

Copies of all laboratory and field test reports within 24 hours of the completion of the test.

PART 2 PRODUCTS

2.1 MATERIALS

2.1.1 Satisfactory Materials

Satisfactory materials shall comprise any materials classified by ASTM D 2487 as GW, GP, GM, GP-GM, GW-GM, GC, GP-GC, GM-GC, SW, SP, SM, SW-SM, SC, SW-SC, SP-SM, SP-SC, CL, ML, CL-ML.

2.1.2 Unsatisfactory Materials

Materials, which do not comply with the requirements for satisfactory materials are unsatisfactory. Unsatisfactory materials also include man-made fills, trash, refuse, or backfills from previous construction. Unsatisfactory material also includes material classified as satisfactory, which contains root and other organic matter, frozen material, and stones larger than 6 inches. The Contracting Officer shall be notified of any contaminated materials.

2.1.3 Cohesionless and Cohesive Materials

Cohesionless materials shall include materials classified in ASTM D 2487 as GW, GP, SW, and SP. Cohesive materials shall include materials classified as GC, SC, ML, and CL. Materials classified as GM and SM shall be identified as cohesionless only when the fines are nonplastic.

2.1.4 Rock

Rock shall consist of boulders measuring 1/2 cubic yard or more and materials that cannot be removed without systematic drilling and blasting such as rock material in ledges, bedded deposits, unstratified masses and conglomerate deposits, and below ground concrete or masonry structures, exceeding 1/2 cubic yard in volume, except that pavements shall not be considered as rock.

2.1.5 Unyielding Material

Unyielding material shall consist of rock and gravelly soils with stones greater than 30 inches in any dimension or as defined by the pipe manufacturer, whichever is smaller.

2.1.6 Unstable Material

Unstable material shall consist of materials too wet to properly support the utility pipe, conduit, or appurtenant structure.

2.1.7 Select Granular Material

Select granular material shall consist of well-graded sand, gravel, crushed gravel, crushed stone or crushed slag composed of hard, tough and durable particles, and shall contain not more than 10 percent by weight of material passing a No. 200 mesh sieve and no less than 95 percent by weight passing the l inch sieve. The maximum allowable aggregate size shall be 3 inches, or the maximum size recommended by the pipe manufacturer, whichever is smaller.

2.2 PLASTIC MARKING TAPE

Plastic marking tape shall be acid and alkali-resistant polyethylene film, 6 inches wide with minimum thickness of 0.004 inch. Tape shall have a minimum strength of 1750 psi lengthwise and 1500 psi crosswise. The tape shall be manufactured with integral wires, foil backing or other means to enable detection by a metal detector when the tape is buried up to 3 feet deep. The tape shall be of a type specifically manufactured for marking and locating underground utilities. The metallic core of the tape shall be encased in a protective jacket or provided with other means to protect it from corrosion. Tape color shall be as specified in TABLE 1 and shall bear a continuous printed inscription describing the specific utility.

TABLE 1. Tape Color

Red:	Electric
Yellow:	Gas, Oil, Dangerous Materials
Orange:	Telephone, Telegraph, Television, Police, and Fire Communications
Blue:	Water Systems
Green:	Sewer Systems

PART 3 EXECUTION

3.1 EXCAVATION

Excavation shall be performed to the lines and grades indicated. During excavation, material satisfactory for backfilling shall be stockpiled in an orderly manner at a distance from the banks of the trench equal to 1/2 the depth of the excavation, but in no instance closer than 2 feet. Excavated material not required or not satisfactory for backfill shall be removed from the site. Grading shall be done as may be necessary to prevent surface water from flowing into the excavation, and any water accumulating shall be removed to maintain the stability of the bottom and sides of the excavation. Unauthorized over excavation shall be backfilled in accordance with paragraph BACKFILLING AND COMPACTION at no additional cost to the Government.

3.1.1 Trench Excavation Requirements

The trench shall be excavated as recommended by the manufacturer of the pipe to be installed. Trench walls below the top of the pipe shall be sloped, or made vertical, and of such width as recommended in the manufacturer's installation manual. Where no manufacturer's installation manual is available, trench walls shall be made vertical. Where sheeting and bracing is required to support the sides of the trenches, the

Contractor shall engage a Professional Engineer, registered in the State of Arizona to design the sheeting and bracing. The sheeting and bracing installed shall be in conformity with the design and certification of this shall be provided by the Professional Engineer. Trench walls, which are cut back, shall be excavated to at least the angle of repose of the soil. Special attention shall be given to slopes, which may be adversely affected, by weather or moisture content. The trench width below the top of pipe shall not exceed 16 inches plus pipe outside diameter (O.D.) for pipes of less than 18 inches inside diameter. Where recommended trench widths are exceeded, redesign, stronger pipe, or special installation procedures shall be utilized by the Contractor. The cost of redesign, stronger pipe, or special installation procedures shall be borne by the Contractor without any additional cost to the Government.

3.1.1.1 Bottom Preparation

The bottoms of trenches shall be accurately graded to provide uniform bearing and support for the bottom quadrant of each section of the pipe. Bell holes shall be excavated to the necessary size at each joint or coupling to eliminate point bearing. Stones of 3/4 inches or greater in any dimension, or as recommended by the pipe manufacturer, whichever is smaller, shall be removed to avoid point bearing.

3.1.1.2 Removal of Unyielding Material

Where [over depth is not indicated and] unyielding material is encountered in the bottom of the trench, such material shall be removed 6 inches below the required grade and replaced with suitable materials as provided in paragraph BACKFILLING AND COMPACTION.

3.1.1.3 Removal of Unstable Material

Where unstable material is encountered in the bottom of the trench, such material shall be removed to the depth directed and replaced to the proper grade with select granular material as provided in paragraph BACKFILLING AND COMPACTION. When removal of unstable material is required due to the Contractor's fault or neglect in performing the work, the resulting material shall be excavated and replaced by the Contractor without additional cost to the Government.

3.1.1.4 Excavation for Appurtenances

Excavation for manholes, catch basins, inlets, or similar structures shall be [sufficient to leave at least 12 inches clear between the outer structure surfaces and the face of the excavation or support members]. Rock shall be cleaned of loose debris and cut to a firm surface either level, stepped, or serrated, as shown or as directed. Loose disintegrated rock and thin strata shall be removed. Removal of unstable material shall be as specified above. When concrete or masonry is to be placed in an excavated area, special care shall be taken not to disturb the bottom of the excavation. Excavation to the final grade level shall not be made until just before the concrete or masonry is to be placed.

3.1.1.5 Jacking, Boring, and Tunneling

Unless otherwise indicated, excavation shall be by open cut except that sections of a trench may be jacked, bored, or tunneled if, in the opinion of the Contracting Officer, the pipe, cable, or duct can be safely and properly installed and backfill can be properly compacted in such sections.

3.1.2 Stockpiles

Stockpiles of satisfactory and unsatisfactory materials shall be placed and graded as specified. Stockpiles shall be kept in a neat and well drained condition, giving due consideration to drainage at all times. The ground surface at stockpile locations shall be cleared, grubbed, and sealed by rubber-tired equipment, excavated satisfactory and unsatisfactory materials shall be separately stockpiled. Stockpiles of satisfactory materials shall be protected from contamination that may destroy the quality and fitness of the stockpiled material. If the Contractor fails to protect the stockpiles, and any material becomes unsatisfactory, such material shall be removed and replaced with satisfactory material from approved sources at no additional cost to the Government. Locations of stockpiles of satisfactory materials shall be subject to prior approval of the Contracting Officer.

3.2 BACKFILLING AND COMPACTION

Backfill material shall consist of satisfactory material or select granular material as required. Backfill shall be placed in layers not exceeding 6 inches loose thickness for compaction by hand operated machine compactors, and 8 inches loose thickness for other than hand operated machines, unless otherwise specified. Each layer shall be compacted to at least 90 percent maximum density for all soils unless otherwise specified.

3.2.1 Trench Backfill

Trenches shall be backfilled to the grade shown. The joints and couplings shall be left uncovered during the pressure test.

3.2.1.1 Replacement of Unyielding Material

Unyielding material removed from the bottom of the trench shall be replaced with select granular material.

3.2.1.2 Replacement of Unstable Material

Unstable material removed from the bottom of the trench or excavation shall be replaced with select granular material placed in layers not exceeding 6 inches loose thickness.

3.2.1.3 Bedding and Backfill

BEDDING: Bedding shall consist of granular material per paragraph 2.1.7 and free of broken concrete, broken pavement, wood or other deleterious material. Open graded rock will not be used without the written approval of the Engineer.

Where water consolidation is used, bedding for conduits, 24 inches or less in

I.D., may be placed in one lift. For larger conduits the first lift shall not exceed the spring line of the pipe.

Where mechanical compaction is used, the moisture content shall be such that the specified compaction can be obtained. The first lift shall be 8 inches or 2/3 of the distance to the spring line whichever is greater. Succeeding lifts shall not exceed 2 feet loose and extreme care will be taken to prevent damage to or movement of the conduit by the compaction equipment.

BACKFILL: Backfill shall be sound earthen material free from broken concrete, broken pavement, wood or other deleterious material. Unless otherwise specified, this may be native material with no piece larger than 3 inches, select material or aggregate base course.

Where water consolidation is used, backfill will be placed in lifts as required in the following table prior to settlement.

Trench Width	**Backfill Lifts**
18" to 24"	Not to exceed 4'
25" to 36"	Not to exceed 6'
Over 36"	Not to exceed 8'

The above backfill lift limitations are not applicable when water saturation is done by the jetting method.

Where mechanical compaction is used, backfill shall be placed in lifts the height of which shall not exceed that which can be effectively compacted depending on the type of material, type of equipment and methods used and under no circumstances shall exceed 4 feet.

Backfill, around utilities that are exposed during trench excavation, shall be placed in accordance with the bedding methods.

3.3 SPECIAL REQUIREMENTS

Special requirements for both excavation and backfill relating to the specific utilities are as follows:

3.3.1 Water Lines

Trenches shall be of a depth to provide a minimum cover of 3 feet from the existing ground surface, or from the indicated finished grade, whichever is lower, to the top of the pipe.

3.3.2 Electrical Distribution System

Direct burial cable and conduit or duct line shall have a minimum cover of 24 inches from the finished grade, unless otherwise indicated. [Special trenching requirements for direct-burial electrical cables and conduits are specified in Section 16375 ELECTRICAL DISTRIBUTION SYSTEM, UNDERGROUND.]

3.3.3 Plastic Marking Tape

Warning tapes shall be installed directly above the pipe, at a depth of 18 inches below finished grade unless otherwise shown.

3.4 TESTING

Testing shall be the responsibility of the Contractor and shall be performed at no additional cost to the Government.

3.4.1 Testing Facilities

Tests shall be performed by an approved commercial testing laboratory or may be tested by facilities furnished by the Contractor. No work requiring testing will be permitted until the facilities have been inspected and approved by the Contracting Officer.

3.4.2 Testing of Backfill Materials

Classification of backfill materials shall be determined in accordance with ASTM D 2487 and the moisture-density relations of soils shall be determined in accordance with ASTM D 1557. A minimum of one soil classification and one moisture-density relation test shall be performed on each different type of material used for bedding and backfill.

3.4.3 Field Density Tests

Tests shall be performed in sufficient numbers to ensure that the specified density is being obtained. A minimum of one field density test per lift of backfill for every 100 feet of installation shall be performed. One moisture density relationship shall be determined for every 1500 cubic yards of material used. Field in-place density shall be determined in accordance with ASTM D 1556, ASTM D 2167 or ASTM D 2922. When ASTM D 2922 is used, the calibration curves shall be checked and adjusted using the sand cone method as described in paragraph Calibration of the ASTM publication. ASTM D 2922 results in a wet unit weight of soil and when using this method, ASTM D 3017 shall be used to determine the moisture content of the soil. The calibration curves furnished with the moisture gauges shall be checked along with density calibration checks as described in ASTM D 3017. The calibration checks of both the density and moisture gauges shall be made at the beginning of a job, on each different type of material encountered, at intervals as directed by the Contracting Officer. Copies of calibration curves, results of calibration tests, and field and laboratory density tests shall be furnished to the Contracting Officer. Trenches improperly compacted shall be reopened to the depth directed, then refilled and compacted to the density specified at no additional cost to the Government.

3.4.4 Displacement of Sewers

After other required tests have been performed and the trench backfill compacted to the finished grade surface, the pipe shall be inspected to determine whether significant displacement has occurred. This inspection shall be conducted in the presence of the Contracting Officer. Pipe sizes larger than 36 inches shall be entered and examined, while smaller diameter pipe shall be inspected by shining a light or laser between manholes or

manhole locations, or by the use of television cameras passed through the pipe. If, in the judgment of the Contracting Officer, the interior of the pipe shows poor alignment or any other defects that would cause improper functioning of the system, the defects shall be remedied as directed at no additional cost to the Government.

-- End of Section --

SECTION TABLE OF CONTENTS

DIVISION 02 - SITE WORK

SECTION 02333

TREATED AND COMPACTED SOIL LINER

09/02

PART 1 GENERAL

1.1 GENERAL
1.2 DESCRIPTION OF WORK
1.3 PERFORMANCE STANDARDS

PART 2 MATERIALS

2.1 SOIL
2.2 SOIL SEALANT MANUFACTURER
2.3 SOIL STABILIZER MANUFACTURER
2.4 TREATED SOIL LINER COMPONENTS
2.5 PHYSICAL AND CHEMICAL PROPERTIES OF THE SOIL SEALANT
2.6 STORAGE
2.7 DILUTION
2.8 PERMEABILITY (INFILTRATION)RATE

PART 3 EXECUTION

3.1 SOIL TESTING
3.1.1 General Testing Requirements
3.1.2 Testing and Processing of Soil used for Liner Construction
3.1.3 Quality Control Testing Requirements
3.2 SOIL LINER PLACEMENT AND COMPACTION
3.2.1 Placement of Soil Liner Material
3.2.2 Excavation and Subgrade Preparation
3.2.3 Mixing
3.2.4 Spreading
3.2.5 Compaction
3.2.6 Field Testing
3.2.7 Moisture Control
3.2.8 Erosion Control & Initial Fill
3.2.9 Permeability Testing
3.3 QUANTITIES OF SEALANT MATERIAL
3.4 CONTROL OF SOIL LINER CONSTRUCTION

-- End of Section Table of Contents --

SECTION 02333

TREATED AND COMPACTED SOIL LINER
09/02

PART 1 GENERAL

1.1 GENERAL

This specification section covers the materials, equipment, procedures, testing, and related work necessary for the installation of treated and compacted soil liner for the proposed wetland marshes.

1.2 DESCRIPTION OF WORK

A soil liner will be constructed below the proposed wetland marshes to control infiltration of water from the marshes into the soil below. A very limited / controlled amount of infiltration is intended to facilitate the maintenance of water quality in the wetland marshes. After installation and testing, the soil liner will be covered with native soil material to provide a growing medium for the proposed wetland marsh plantings.

1.3 PERFORMANCE STANDARDS

The completed soil liner shall provide for the restricted infiltration of water from the proposed wetland marshes into the soil below at rates specified herein.

PART 2 MATERIALS

2.1 SOIL

The soil used in the construction of the soil liner shall be on-site native soil generated by the excavation of the wetland marshes. The soil may need to be screened or processed. Screening and processing work shall be as determined by the soil sealant manufacturer / supplier and shall be based on an engineering review of geotechnical investigation and testing work performed on the excavated soil.

2.2 SOIL SEALANT MANUFACTURER

Soil sealant shall be as manufactured and supplied by a company regularly engaged in the production of sealants and stabilizers for mixing with soil to create liners for ponds, lakes, and marshes. The manufacturer shall have successfully completed not less than ten (10) similar projects within fifty (50) miles of the project site. Project names, and owner / client references , with addresses and phone numbers, for these ten projects shall be provided to the Contracting Officer for review and approval.

2.3 SOIL STABILIZER MANUFACTURER

Soil stabilizer shall serve as a compaction aid and shall be as

manufactured and distributed by the approved soil sealant manufacturer.

2.4 TREATED SOIL LINER COMPONENTS

The soil liner shall be constructed with select soils from the project site as tested and as approved by the soil sealant manufacturer and the Contracting Officer. These soils shall be mixed with soil sealant, soil stabilizer, and water. The mixed material shall be placed, fine graded, and compacted to form a treated soil liner. Total thickness shall be a minimum of 12-inches, or as recommended by the soil sealant supplier / manufacturer.

2.5 PHYSICAL AND CHEMICAL PROPERTIES OF THE SOIL SEALANT

The soil sealant shall be a vegetable oil based resinous polymer emulsion with a minor amount of a biodegradable, water soluble, anionic, no-phosphate household type detergent as the emulsifying agent. Physical characteristics shall be as follows:

Solvent:	Water
pH:	9.0 min.
Density:	7.75 LB/GAL
Specific Gravity:	0.93
Non-Toxic	
Non-Flammable	

2.6 STORAGE

The soil sealant and stabilizer shall be kept from freezing. The products shall be stored under cover and out of direct sunlight.

2.7 DILUTION

Dilution rates shall be as per the soil sealant / stabilizer manufacturer's written recommendations.

2.8 PERMEABILITY (INFILTRATION)RATE

The Contractor and manufacturer shall guarantee a permeability (infiltration) rate through the completed soil liner of 1/4 inch per day for the conditions shown in the drawings. Testing shall be performed to verify the permeability of the completed soil liner as specified herein.

PART 3 EXECUTION

3.1 SOIL TESTING

3.1.1 General Testing Requirements

The soil sealant / stabilizer shall be compatible with the soil types encountered on the project site. The Contractor shall obtain not less than ten (10) representative soil samples from the stockpiles of soil excavated from the proposed wetland marshes on the project site. The soil samples shall be representative of the soil proposed for use in the construction of

the soil liner. These samples shall be tested by an independent laboratory in accordance with ASTM standards and procedures. The Contractor shall be responsible for all costs associated with soil testing and analysis. The results of the soil test shall be used by the soil sealant / stabilizer manufacturer to determine final material application rates and mixing procedures. Three (3) copies of the manufacturer's written recommendations related to material application rates and mixing procedures shall be provided to the Contracting Officer ten (10) days prior to the start of the soil liner construction.

3.1.2 Testing and Processing of Soil used for Liner Construction

The liner shall consist of treated and compacted soil. The soil to be treated shall be taken from on-site stockpile(s) approved by sealant manufacturer after the completion of an engineering review of the soil test results. All soil and related geotechnical investigations of the proposed soils shall be the responsibility of the Contractor. Screening or processing of the soil and subsequent testing may be required. All screening and processing of soil to be used in liner construction shall be the responsibility of the Contractor. Soil screening and processing methods shall be as recommended by the soil sealant manufacturer.

3.1.3 Quality Control Testing Requirements

The Contractor, in concert with with soil sealant manufacturer shall perform quality control testing of the soil liner material as it is mixed, transported, and placed in the locations as shown on the drawings. The scope of the testing shall be as determined by the Contractor and sealant manufacturer. The Contractor and sealant manufacturer shall guarantee the performance of the soil liner as specified herein.

3.2 SOIL LINER PLACEMENT AND COMPACTION

3.2.1 Placement of Soil Liner Material

The soil liner material shall be placed in multiple lifts until the specified and detailed thickness has been achieved. The depth of each individual lift shall not exceed six (6") inches, after compaction. No liner materials shall be placed when ambient temperatures are below freezing or when frost is forecast.

3.2.2 Excavation and Subgrade Preparation

The wetland marsh shall be over-excavated by the specified liner thickness with side slopes as shown on the drawings but in no case steeper than 3:1. During the excavation process, a "mixing-pad" or area for the mixing of select and/or processed soils with the soil sealant shall be created. This mixing pad may or may not be inside the proposed wetland marsh area. The marsh subgrade shall be brought to the elevations noted on the drawings and graded smooth. The subgrade shall be compacted to not less than 90% of the laboratory maximum density as specified in SECTION 02300 - EARTHWORK. All rock with a diameter greater than four inches (4"), rock outcrops, debris, or other foreign material shall be removed from the ground surface prior to the start of soil liner placement.

3.2.3 Mixing

The soil liner material shall be a uniform mixture of select soil, water, and emulsion (sealant / stabilizer) mixture. A 2,000-gallon, or larger, water truck shall be provided for moisturizing the mixing pad with water and the specified amounts of soil sealant and soil stabilizer. Select soil shall be placed on the mixing pad to a uniform depth of six inches (6"). The water and sealant / stabilizer mixture shall be applied to the soil and thoroughly incorporated into the select soil. Mixing shall be accomplished by discing with an offset type self-cleaning disc sufficiently weighted to produce full mixing to a depth of six inches, or by other approved mixing method. Multiple passes will be required to achieve a uniform mixture of the soil, and soil sealant / stabilizer.

3.2.4 Spreading

Each batch of prepared soil shall be transported from the mixing pad to the marsh by use of a self-loading scraper or other approved equipment. The soil liner material shall be shall be placed and spread on the approved subgrade, or on the previous lift of soil liner material, and compacted.

3.2.5 Compaction

Each six-inch lift shall be compacted to at least 97% at or not below 2% optimum moisture as determined by ASTM Method D-698A or as approved by soil sealant manufacturer. Compaction shall be accomplished by a sheepsfoot compactor or other approved method.

3.2.6 Field Testing

Field testing performed shall be conducted in accordance with ASTM Designation D 2922 "Standard Test Method for Density of Soil and Soil Aggregate in Place by Nuclear Methods" or by ASTM D1556 "Density Testing by Sand cone Method". Proctor values to be provided by the soil sealant / stabilizer manufacturer / supplier. Field testing during the installation of the liner shall be the responsibility of the Contractor. If Nuclear Density testing is utilized, nuclear gauge will be calibrated by Sand Cone every ten tests.

3.2.7 Moisture Control

To prevent desiccation, cracking or drying out during and or after placement, the soil liner shall be kept continuously moist until the marsh is filled. Procedures for maintaining moisture conditions from the time of soil liner installation through the filling of the wetland marsh with water shall be as approved by the sealant manufacturer and the Contracting Officer.

3.2.8 Erosion Control & Initial Fill

Preventative measures need to be taken during construction and during the subsequent placement of fill soil above the liner to eliminate any possibility of erosion of the soil liner. Erosion control shall be the

responsibility of the Contractor. All erosion or other damage to the soil liner shall be repaired or replaced in a manner acceptable to the sealant manufacturer and the Contracting Officer.

3.2.9 Permeability Testing

Following completion of the soil liner construction, and prior to the placement of soil backfill, the soil liner permeability shall be tested for compliance with the permeability rate specified in Paragraph 2.8. Testing procedures and locations shall be as approved by the Contracting Officer. Test duration shall be a minimum of 24 hours and test shall account for evaporation during the test period.

3.3 QUANTITIES OF SEALANT MATERIAL

Quantities of sealant materials shall be as specified by the manufacturer / supplier and shall be adjusted as necessary based on soil and other site conditions at the time of construction. Method(s) for mixing, and application may be modified by the manufacturer / supplier as conditions warrant. Modifications shall be as approved by the Contracting Officer.

3.4 CONTROL OF SOIL LINER CONSTRUCTION

The construction of the soil liner shall be under the direct supervision and control of a representative of the sealant manufacturer. The individual shall have prior experience with the supervision of soil liners using the specified materials and techniques. In addition, the Contracting Officer shall have the authority to stop all work related to the soil liner installation if the provisions of this specification section are not being met.

-- End of Section --

SECTION TABLE OF CONTENTS

DIVISION 02 - SITE WORK

SECTION 02510A

WATER DISTRIBUTION SYSTEM

09/02

PART 1 GENERAL

1.1 REFERENCES
1.2 PIPING
1.2.1 Service Lines
1.2.2 Distribution Lines 3 Inches or Larger
1.2.3 Supply Lines 3 Inches or Larger
1.2.4 Sprinkler Supply Lines
1.2.5 Potable Water Lines
1.2.6 Plastic Piping System
1.2.7 Excavation, Trenching, and Backfilling
1.3 MANUFACTURER'S REPRESENTATIVE (NOT USED)
1.4 SUBMITTALS
1.5 HANDLING
1.5.1 Coated and Wrapped Steel Pipe (Not Used)
1.5.2 Polyethylene (PE) Pipe Fittings and Accessories (Not Used)
1.5.3 Miscellaneous Plastic Pipe and Fittings

PART 2 PRODUCTS

2.1 PIPE
2.1.1 Reinforced and Pre-stressed Concrete Pipe (Not Used)
2.1.2 Plastic Pipe
2.1.2.1 PE Plastic Pipe (Not Used)
2.1.2.2 PVC Plastic Pipe
2.1.3 Reinforced Plastic Mortar Pressure (RPMP) Pipe (Not Used)
2.1.4 Reinforced Thermosetting Resin Pipe (RTRP) (Not Used)
2.1.5 Ductile-Iron Pipe
2.1.6 Steel Pipe (Not Used)
2.1.7 Copper Tubing
2.2 FITTINGS AND SPECIALS
2.2.1 Reinforced Concrete Pipe System (Not Used)
2.2.2 PVC Pipe System
2.2.3 RTRP and RPMP Pipe (Not Used)
2.2.4 Ductile-Iron Pipe System
2.2.5 Steel Pipe System
2.2.5.1 Not Galvanized Steel Pipe (Not Used)
2.2.5.2 Galvanized Steel Piping
2.2.5.3 Dielectric Fittings
2.2.6 Copper Tubing System
2.3 JOINTS

2.3.1 Gaskets for Reinforced Concrete Pipe (Not Used)
2.3.2 Plastic Pipe Jointing
2.3.2.1 PE Pipe (Not Used)
2.3.2.2 PVC Pipe
2.3.3 RPMP Pipe (Not Used)
2.3.4 RTRP Pipe (Not Used)
2.3.5 Ductile-Iron Pipe Jointing
2.3.6 Steel Pipe Jointing
2.3.6.1 Steel Pipe, Not Galvanized (Not Used)
2.3.6.2 Mechanical Couplings
2.3.7 Bonded Joints (Not Used)
2.3.8 Isolation Joints
2.3.9 Copper Tubing Jointing
2.4 VALVES
2.4.1 Check Valves
2.4.2 Gate Valves
2.4.3 Rubber-Seated Butterfly Valves
2.4.4 Pressure Reducing Valves (Not Used)
2.4.5 Vacuum and Air Relief Valves
2.5 VALVE BOXES
2.6 VALVE PITS
2.7 FIRE HYDRANTS (NOT Used)
2.8 FIRE-HYDRANT HOSE HOUSES (Not used)
2.9 MISCELLANEOUS ITEMS
2.9.1 Service Clamps
2.9.2 Corporation Stops
2.9.3 Goosenecks
2.9.4 Service Stops
2.9.5 Tapping Sleeves
2.9.6 Service Boxes
2.9.7 Disinfection
2.9.8 Meters (Not Used)
2.10 METER VAULTS (NOT USED)

PART 3 EXECUTION

3.1 Waste Water Disposal Method
3.2 Satisfactory Installation
3.3 INSTALLATION
3.3.1 Cutting of Pipe
3.3.2 Adjacent Facilities
3.3.2.1 Sewer Lines
3.3.2.2 Water Lines
3.3.2.3 Copper Tubing Lines
3.3.2.4 Nonferrous Metallic Pipe
3.3.2.5 Casing Pipe
3.3.2.6 Structures
3.3.3 Joint Deflection
3.3.3.1 Allowable for Reinforced Concrete Pipe (Not Used)
3.3.3.2 Offset for Flexible Plastic Pipe
3.3.3.3 Allowable for Ductile-Iron Pipe
3.3.3.4 Allowable for Steel Pipe (Not Used)
3.3.3.5 Allowable for RPMP Pipe (Not Used)
3.3.4 Placing and Laying

3.3.4.1 Reinforced Concrete Pipe Installation (Not Used)
3.3.4.2 Plastic Pipe Installation
3.3.4.3 Piping Connections
3.3.4.4 Penetrations
3.3.4.5 Flanged Pipe
3.3.5 Jointing
3.3.5.1 Reinforced Concrete Pipe Requirements (Not Used)
3.3.5.2 PE Pipe Requirements (Not Used)
3.3.5.3 PVC Plastic Pipe Requirements
3.3.5.4 RTRP I, RTRP II and RPMP Pipe (Not Used)
3.3.5.5 Ductile-Iron Pipe Requirements
3.3.5.6 Not Galvanized Steel Pipe Requirements (Not Used)
3.3.5.7 Galvanized Steel Pipe Requirements
3.3.5.8 Copper Tubing Requirements
3.3.5.9 Bonded Joints Requirements
3.3.5.10 Isolation Joints and Dielectric Fittings
3.3.5.11 Transition Fittings
3.3.6 Installation of Service Lines (Not Used)
3.3.7 Field Coating and Lining of Pipe
3.3.7.1 Steel Pipe 80 mm (3 In.) and Larger, Not Galvanized (Not Used)
3.3.7.2 Galvanized Steel Pipe, Field Coating
3.3.8 Setting of Fire Hydrants, Meters, Valves and Valve Boxes
3.3.8.1 Location of Fire Hydrants (Not Used)
3.3.8.2 Location of Meters (Not Used)
3.3.8.3 Location of Valves
3.3.8.4 Location of Service Boxes (Not Used)
3.3.9 Tapped Tees and Crosses
3.3.10 Thrust Restraint
3.3.10.1 Thrust Blocks
3.3.10.2 Restrained Joints
3.4 HYDROSTATIC TESTS
3.4.1 Pressure Test
3.4.2 Leakage Test
3.4.3 Time for Making Test
3.4.4 Concurrent Hydrostatic Tests
3.5 BACTERIAL DISINFECTION (NOT USED)
3.6 CLEANUP

-- End of Section Table of Contents --

SECTION 02510A

WATER DISTRIBUTION SYSTEM
09/02

PART 1 GENERAL

1.1 REFERENCES

The publications listed below form a part of this specification to the extent referenced. The publications are referred to in the text by basic designation only.

AMERICAN SOCIETY FOR TESTING AND MATERIALS (ASTM)

ASTM A 36/A 36M	(2000a) Carbon Structural Steel
ASTM A 53	(1999b) Pipe, Steel, Black and Hot-Dipped, Zinc-Coated, Welded and Seamless
ASTM B 88	(1999) Seamless Copper Water Tube
ASTM B 88M	(1999) Seamless Copper Water Tube (Metric)
ASTM C 76	(1999) Reinforced Concrete Culvert, Storm Drain, and Sewer Pipe
ASTM C 76M	(1999a) Reinforced Concrete Culvert, Storm Drain, and Sewer Pipe (Metric)
ASTM D 1599	(1999) Resistance to Short-Time Hydraulic Failure Pressure of Plastic Pipe, Tubing, and Fittings
ASTM D 1784	(1999a) Rigid Poly(Vinyl Chloride) (PVC) Compounds and Chlorinated Poly(Vinyl Chloride) (CPVC) Compounds
ASTM D 1785	(2000) Poly(Vinyl Chloride) (PVC) Plastic Pipe, Schedules 40, 80, and 120
ASTM D 2241	(1996b) Poly(Vinyl Chloride) (PVC) Pressure-Rated Pipe (SDR Series)
ASTM D 2464	(1999) Threaded Poly(Vinyl Chloride) (PVC) Plastic Pipe Fittings, Schedule 80
ASTM D 2466	(1999) Poly(Vinyl Chloride) (PVC) Plastic Pipe Fittings, Schedule 40

ASTM D 2467	(1999) Poly(Vinyl Chloride) (PVC) Plastic Pipe Fittings, Schedule 80
ASTM D 2564	(1996a) Solvent Cements for Poly(Vinyl Chloride) (PVC) Plastic Piping Systems
ASTM D 2657	(1997) Heat Fusion Joining Polyolefin Pipe and Fittings
ASTM D 2774	(1994) Underground Installation of Thermoplastic Pressure Piping
ASTM D 2855	(1996) Making Solvent-Cemented Joints with Poly(Vinyl Chloride) (PVC) Pipe and Fittings
ASTM D 2996	(1995) Filament-Wound "Fiberglass" (Glass-Fiber-Reinforced Thermosetting-Resin) Pipe
ASTM D 2997	(1995) Centrifugally Cast "Fiberglass" (Glass-Fiber-Reinforced Thermosetting-Resin) Pipe
ASTM D 3139	(1998) Joints for Plastic Pressure Pipes Using Flexible Elastomeric Seals
ASTM D 3839	(1994a) Underground Installation of "Fiberglass" (Glass-Fiber-Reinforced Thermosetting Resin) Pipe
ASTM D 4161	(1996) "Fiberglass"(Glass-Fiber-Reinforced Thermosetting Resin) Pipe Joints Using Elastomeric Seals
ASTM F 477	(1999) Elastomeric Seals (Gaskets) for Joining Plastic Pipe
ASTM F 1483	(1998) Oriented Poly(Vinyl Chloride), PVCO, Pressure Pipe

ASME INTERNATIONAL (ASME)

ASME B1.20.1	(1983; R 1992) Pipe Threads, General Purpose (Inch)
ASME B16.1	(1998) Cast Iron Pipe Flanges and Flanged Fittings
ASME B16.3	(1998) Malleable Iron Threaded Fittings
ASME B16.26	(1988) Cast Copper Alloy Fittings for Flared Copper Tubes

ASME B36.10M	(1996) Welded and Seamless Wrought Steel Pipe

AMERICAN WATER WORKS ASSOCIATION (AWWA)

AWWA B300	(1992) Hypochlorites
AWWA B301	(1992) Liquid Chlorine
AWWA C104	(1995) Cement-Mortar Lining for Ductile-Iron Pipe and Fittings for Water
AWWA C105	(1993) Polyethylene Encasement for Ductile-Iron Pipe Systems
AWWA C110	(1993) Ductile-Iron and Gray-Iron Fittings, 3 In. Through 48 In. (75 mm through 1200 mm), for Water and Other Liquids
AWWA C111	(1995) Rubber-Gasket Joints for Ductile-Iron Pressure Pipe and Fittings
AWWA C115	(1996) Flanged Ductile-Iron Pipe With Ductile-Iron or Gray-Iron Threaded Flanges
AWWA C151	(1996) Ductile-Iron Pipe, Centrifugally Cast, for Water or Other Liquids
AWWA C153	(1994; Errata Nov 1996) Ductile-Iron Compact Fittings, 3 In. Through 24 In. (76 mm through 610 mm) and 54 In. through 64 In. (1,400 mm through 1,600 mm) for Water Service
AWWA C200	(1997) Steel Water Pipe - 6 In. (150 mm) and Larger
AWWA C203	(1997) Coal-Tar Protective Coatings and Linings for Steel Water Pipelines - Enamel and Tape - Hot-Applied
AWWA C205	(1995) Cement-Mortar Protective Lining and Coating for Steel Water Pipe - 4 In. (100 mm) and Larger - Shop Applied
AWWA C207	(1994) Steel Pipe Flanges for Waterworks Service - Sizes 4 In. Through 144 In. (100 mm through 3,600 mm)
AWWA C208	(1996) Dimensions for Fabricated Steel Water Pipe Fittings

AWWA C300	(1997) Reinforced Concrete Pressure Pipe, Steel-Cylinder Type, for Water and Other Liquids
AWWA C301	(1992) Prestressed Concrete Pressure Pipe, Steel-Cylinder Type, for Water and Other Liquids
AWWA C303	(1995) Concrete Pressure Pipe, Bar-Wrapped, Steel Cylinder Type
AWWA C500	(1993; C500a) Metal-Sealed Gate Valves for Water Supply Service
AWWA C502	(1994; C502a) Dry-Barrel Fire Hydrants
AWWA C503	(1997) Wet-Barrel Fire Hydrants
AWWA C504	(1994) Rubber-Seated Butterfly Valves
AWWA C509	(1994; Addendum 1995) Resilient-Seated Gate Valves for Water Supply Service
AWWA C600	(1993) Installation of Ductile-Iron Water Mains and Their Appurtenances
AWWA C606	(1997) Grooved and Shouldered Joints
AWWA C651	(1992) Disinfecting Water Mains
AWWA C700	(1995) Cold-Water Meters - Displacement Type, Bronze Main Case
AWWA C701	(1988) Cold-Water Meters - Turbine Type, for Customer Service
AWWA C702	(1992) Cold-Water Meters - Compound Type
AWWA C703	(1996) Cold-Water Meters - Fire Service Type
AWWA C704	(1992) Propeller-Type Meters Waterworks Applications
AWWA C706	(1996) Direct-Reading, Remote-Registration Systems for Cold-Water Meters
AWWA C707	(1982; R 1992) Encoder-Type Remote-Registration Systems for Cold-Water Meters
AWWA C800	(1989) Underground Service Line Valves and Fittings

AWWA C900	(1997; C900a) Polyvinyl Chloride (PVC) Pressure Pipe, 4 In. Through 12 In., for Water Distribution
AWWA C901	(1996) Polyethylene (PE) Pressure Pipe and Tubing, 1/2 In. Through 3 In., for Water Service
AWWA C905	(1997) Polyvinyl Chloride (PVC) Water Transmission Pipe, Nominal Diameters 14 In. Through 36 In.
AWWA C909	(1998) Molecularly Oriented Polyvinyl Chloride (PVCO) Pressure Pipe, 4 IN through 12 IN (100 mm through 300 mm), for Water Distribution
AWWA C950	(1995) Fiberglass Pressure Pipe
AWWA M23	(1980) Manual: PVC Pipe - Design and Installation

ASBESTOS CEMENT PIPE PRODUCERS ASSOCIATION (ACPPA)

ACPPA Work Practices	(1988) Recommended Work Practices for A/C Pipe

DUCTILE IRON PIPE RESEARCH ASSOCIATION (DIPRA)

DIPRA-Restraint Design	(1997) Thrust Restraint Design for Ductile Iron Pipe

MANUFACTURERS STANDARDIZATION SOCIETY OF THE VALVE AND FITTINGS INDUSTRY (MSS)

MSS SP-80	(1997) Bronze Gate, Globe, Angle and Check Valves

NATIONAL FIRE PROTECTION ASSOCIATION (NFPA)

NFPA 24	(1995) Installation of Private Fire Service Mains and Their Appurtenances
NFPA 49	(1994) Hazardous Chemicals Data
NFPA 325-1	(1994) Fire Hazard Properties of Flammable Liquids, Gases, and Volatile Solids
NFPA 704	(1996) Identification of the Fire Hazards of Materials for Emergency Response
NFPA 1961	(1997) Fire Hose

NSF INTERNATIONAL (NSF)

NSF 14	(1998) Plastics Piping Components and Related Materials
NSF 61	(1999) Drinking Water System Components - Health Effects (Sections 1-9)

THE SOCIETY FOR PROTECTIVE COATINGS (SSPC)

SSPC Paint 21	(1991) White or Colored Silicone Alkyd Paint
SSPC Paint 25	(1991) Red Iron Oxide, Zinc Oxide, Raw Linseed Oil and Alkyd Primer (Without Lead and Chromate Pigments)

1.2 PIPING

This section covers water supply, distribution and service lines. The Contractor shall have a copy of the manufacturer's recommendations for each material or procedure to be utilized available at the construction site at all times.

1.2.1 Service Lines

Piping for water service lines less than 3 inches in diameter shall be galvanized steel, polyvinyl chloride (PVC) plastic, Oriented PVC plastic polyethylene, or copper tubing, unless otherwise shown or specified. Piping for water service lines 3 inches and larger shall be ductile iron, polyvinyl chloride (PVC) plastic, filament-wound or centrifugally cast reinforced thermosetting resin, reinforced plastic mortar pressure pipe or steel, unless otherwise shown or specified.

1.2.2 Distribution Lines 3 Inches or Larger

Piping for water distribution lines 3 inches or larger shall be ductile iron, polyvinyl chloride (PVC) through 36-inch nominal diameter unless otherwise shown or specified.

1.2.3 Supply Lines 3 Inches or Larger

Piping for water supply lines 3 inches or larger shall be ductile iron, polyvinyl chloride (PVC) plastic, through 36-inch nominal diameter unless otherwise shown or specified.

1.2.4 Sprinkler Supply Lines

Piping for water lines supplying sprinkler systems for building fire protection shall conform to NFPA 24 from the point of connection with the water distribution system to the building 5 foot line.

1.2.5 Potable Water Lines

Piping and components of potable water systems which come in contact with

the potable water shall conform to NSF 61.

1.2.6 Plastic Piping System

Plastic piping system components (PVC) intended for transportation of potable water shall comply with NSF 14 and be legibly marked with their symbol.

1.2.7 Excavation, Trenching, and Backfilling

Excavation, trenching, and backfilling shall be in accordance with the applicable provisions of Section 02316a EXCAVATION, TRENCHING, AND BACKFILLING FOR UTILITIES SYSTEMS, except as modified herein.

1.3 MANUFACTURER'S REPRESENTATIVE (NOT USED)

1.4 SUBMITTALS

Government approval is required for submittals with a "G" designation; submittals not having a "G" designation are for information only. The following shall be submitted in accordance with Section 01330 SUBMITTAL PROCEDURES:

SD-03 Product Data

Installation:
The manufacturer's recommendations for each material or procedure to be utilized.

Waste Water Disposal Method:

Satisfactory Installation:

1.5 HANDLING

Pipe and accessories shall be handled to ensure delivery to the trench in sound, undamaged condition, including no injury to the pipe coating or lining. If the coating or lining of any pipe or fitting is damaged, the repair shall be made by the Contractor in a satisfactory manner, at no additional cost to the Government. No other pipe or material shall be placed inside a pipe or fitting after the coating has been applied. Pipe shall be carried into position and not dragged. Use of pinch bars and tongs for aligning or turning pipe will be permitted only on the bare ends of the pipe. The interior of pipe and accessories shall be thoroughly cleaned of foreign matter before being lowered into the trench and shall be kept clean during laying operations by plugging or other approved method. Before installation, the pipe shall be inspected for defects. Material found to be defective before or after laying shall be replaced with sound material without additional expense to the Government. Rubber gaskets that are not to be installed immediately shall be stored in a cool and dark place.

1.5.1 Coated and Wrapped Steel Pipe (Not Used)

1.5.2 Polyethylene (PE) Pipe Fittings and Accessories (Not Used)

1.5.3 Miscellaneous Plastic Pipe and Fittings

Polyvinyl Chloride (PVC) pipe and fittings shall be handled and stored in accordance with the manufacturer's recommendations. Storage facilities shall be classified and marked in accordance with NFPA 704, with classification as indicated in NFPA 49 and NFPA 325-1.

PART 2 PRODUCTS

2.1 PIPE

Pipe shall conform to the respective specifications and other requirements specified below.

2.1.1 Reinforced and Pre-stressed Concrete Pipe (Not Used)

2.1.2 Plastic Pipe

2.1.2.1 PE Plastic Pipe (Not Used)

2.1.2.2 PVC Plastic Pipe

Pipe, couplings and fittings shall be manufactured of material conforming to ASTM D 1784, Class 12454B.

a. Pipe Less Than 4 inch Diameter:

(1) Screw-Joint: Pipe shall conform to dimensional requirements of ASTM D 1785 Schedule 80, with joints meeting requirements of 150 psi working pressure, 200 psi hydrostatic test pressure, unless otherwise shown or specified. Pipe couplings when used, shall be tested as required by ASTM D 2464.

(2) Elastomeric-Gasket Joint: Pipe shall conform to dimensional requirements of ASTM D 1785 Schedule 40, with joints meeting the requirements of 150 psi working pressure, 200 psi hydrostatic test pressure, unless otherwise shown or specified, or it may be pipe conforming to requirements of ASTM D 2241, elastomeric joint, with the following applications:

SDR	Max Working Press. (psi)	Min. Hydrostatic Press. (psi)
26	100	133
21	120	160
17	150	200
13.5	200	266

(3) Solvent Cement Joint: Pipe shall conform to dimensional requirements of ASTM D 1785 or ASTM D 2241 with joints meeting the requirements of 150 psi working pressure and 200 psi hydrostatic test pressure.

b. Pipe 4 through 12 inch Diameter: Pipe, couplings and fittings shall conform to AWWA C900, Class 150, CIOD pipe dimensions, elastomeric-gasket joint, unless otherwise shown or specified.

c. Pipe 14 through 36 inch Diameter: Pipe shall conform to AWWA C905 unless otherwise shown or specified.

2.1.3 Reinforced Plastic Mortar Pressure (RPMP) Pipe (Not Used)

2.1.4 Reinforced Thermosetting Resin Pipe (RTRP) (Not Used)

2.1.5 Ductile-Iron Pipe

Ductile-iron pipe shall conform to AWWA C151, working pressure not less than 150 psi, unless otherwise shown or specified. Pipe shall be cement-mortar lined in accordance with AWWA C104. Linings shall be standard. When installed underground, pipe shall be encased with minimum 8 mil thick polyethylene in accordance with AWWA C105. Flanged ductile iron pipe with threaded flanges shall be in accordance with AWWA C115.

2.1.6 Steel Pipe (Not Used)

2.1.7 Copper Tubing

Copper tubing shall conform to ASTM B 88, Type K, annealed.

2.2 FITTINGS AND SPECIALS

2.2.1 Reinforced Concrete Pipe System (Not Used)

2.2.2 PVC Pipe System

a. For pipe less than 4 inch diameter, fittings for threaded pipe shall conform to requirements of ASTM D 2464, threaded to conform to the requirements of ASME B1.20.1 for use with Schedule 80 pipe and fittings; fittings for solvent cement jointing shall conform to ASTM D 2466 or ASTM D 2467; and fittings for elastomeric-gasket joint pipe shall be iron conforming to AWWA C110 or AWWA C111. Iron fittings and specials shall be cement-mortar lined (standard thickness) in accordance with AWWA C104.

b. For pipe 4 inch diameter and larger, fittings and specials shall be iron, bell end in accordance with AWWA C110, 150 psi pressure rating unless otherwise shown or specified, except that profile of bell may have special dimensions as required by the pipe manufacturer; or fittings and specials may be of the same material as the pipe with elastomeric gaskets, all in conformance with AWWA C900. Iron fittings and specials shall be cement-mortar lined (standard thickness) in accordance with AWWA C104. Fittings shall be bell and spigot or plain end pipe, or as applicable. Ductile iron compact fittings shall be in accordance with AWWA C153.

2.2.3 RTRP and RPMP Pipe (Not Used)

2.2.4 Ductile-Iron Pipe System

Fittings and specials shall be suitable for 150 psi pressure rating, unless otherwise specified. Fittings and specials for mechanical joint pipe shall conform to AWWA C110. Fittings and specials for use with push-on joint pipe shall conform to AWWA C110 and AWWA C111. Fittings and specials for grooved and shouldered end pipe shall conform to AWWA C606. Fittings and specials shall be cement-mortar lined (standard thickness) in accordance with AWWA C104. Ductile iron compact fittings shall conform to AWWA C153.

2.2.5 Steel Pipe System

2.2.5.1 Not Galvanized Steel Pipe (Not Used)

2.2.5.2 Galvanized Steel Piping

Steel fittings shall be galvanized. Screwed fittings shall conform to ASME B16.3. Flanged fittings shall conform to AWWA C207.

2.2.5.3 Dielectric Fittings

Dielectric fittings shall be installed between threaded ferrous and nonferrous metallic pipe, fittings and valves, except where corporation stops join mains. Dielectric fittings shall prevent metal-to-metal contact of dissimilar metallic piping elements and shall be suitable for the required working pressure.

2.2.6 Copper Tubing System

Fittings and specials shall be flared and conform to ASME B16.26.

2.3 JOINTS

2.3.1 Gaskets for Reinforced Concrete Pipe (Not Used)

2.3.2 Plastic Pipe Jointing

2.3.2.1 PE Pipe (Not Used)

2.3.2.2 PVC Pipe

Joints, fittings, and couplings shall be as specified for PVC pipe. Joints connecting pipe of differing materials shall be made in accordance with the manufacturer's recommendations, and as approved by the Contracting Officer.

2.3.3 RPMP Pipe (Not Used)

2.3.4 RTRP Pipe (Not Used)

2.3.5 Ductile-Iron Pipe Jointing

a. Mechanical joints shall be of the stuffing box type and shall conform to AWWA C111.

b. Push-on joints shall conform to AWWA C111.

c. Rubber gaskets and lubricants shall conform to the applicable requirements of AWWA C111.

2.3.6 Steel Pipe Jointing

2.3.6.1 Steel Pipe, Not Galvanized (Not Used)

2.3.6.2 Mechanical Couplings

Mechanical couplings for steel pipe shall be the sleeve type, or when approved, the split-sleeve type and shall provide a tight flexible joint under all reasonable conditions, such as pipe movements caused by expansion, contraction, slight setting or shifting in the ground, minor variations in trench gradients, and traffic vibrations. Couplings shall be of strength not less than the adjoining pipeline.

2.3.7 Bonded Joints (Not Used)

2.3.8 Isolation Joints

Isolation joints shall be installed between nonthreaded ferrous and nonferrous metallic pipe, fittings and valves. Isolation joints shall consist of a sandwich-type flange isolation gasket of the dielectric type, isolation washers, and isolation sleeves for flange bolts. Isolation gaskets shall be full faced with outside diameter equal to the flange outside diameter. Bolt isolation sleeves shall be full length. Units shall be of a shape to prevent metal-to-metal contact of dissimilar metallic piping elements.

a. Sleeve-type couplings shall be used for joining plain end pipe sections. The two couplings shall consist of one steel middle ring, two steel followers, two gaskets, and the necessary steel bolts and nuts to compress the gaskets.

b. Split-sleeve type couplings may be used in aboveground installations when approved in special situations and shall consist of gaskets and a housing in two or more sections with the necessary bolts and nuts.

2.3.9 Copper Tubing Jointing

Joints shall be compression-pattern flared and shall be made with the specified fittings.

2.4 VALVES

2.4.1 Check Valves

Check valves shall be designed for a minimum working pressure of 150 psi or as indicated. Valves shall have a clear waterway equal to the full nominal diameter of the valve. Valves shall open to permit flow when inlet

pressure is greater than the discharge pressure, and shall close tightly to prevent return flow when discharge pressure exceeds inlet pressure. The size of the valve, working pressure, manufacturer's name, initials, or trademark shall be cast on the body of each valve. Valves 2 inches and larger shall be outside lever and spring, or as indicated

a. Valves 2 inches and smaller shall be all bronze designed for screwed fittings, and shall conform to MSS SP-80, Class 150, Types 3 and 4 as suitable for the application.

b. Valves larger than 2 inches shall be iron body, bronze mounted, shall have flanged ends, and shall be the non-slam type. Flanges shall be the Class 125 type conforming to ASME B16.1.

2.4.2 Gate Valves

Gate valves shall be designed for a working pressure of not less than 150 psi. Valve connections shall be as required for the piping in which they are installed. Valves shall have a clear waterway equal to the full nominal diameter of the valve, and shall be opened by turning counterclockwise. The operating nut or wheel shall have an arrow, cast in the metal, indicating the direction of opening.

a. Valves smaller than 3 inches shall be all bronze and shall conform to MSS SP-80, Type 1, Class 150.

b. Valves 3 inches and larger shall be iron body, bronze mounted, and shall conform to AWWA C500. Flanges shall not be buried. An approved pit shall be provided for all flanged connections.

c. Resilient-Seated Gate Valves: For valves 3 to 12 inches in size, resilient-seated gate valves shall conform to AWWA C509.

2.4.3 Rubber-Seated Butterfly Valves

Rubber-seated butterfly valves shall conform to the performance requirements of AWWA C504. Wafer type valves conforming to the performance requirements of AWWA C504 in all respects, but not meeting laying length requirements will be acceptable if supplied and installed with a spacer providing the specified laying length. All tests required by AWWA C504 shall be met. Flanged-end valves shall be installed in an approved pit and provided with a union or sleeve-type coupling in the pit to permit removal. Mechanical-end valves 3 through 10 inches in diameter may be direct burial if provided with a suitable valve box, means for manual operation, and an adjacent pipe joint to facilitate valve removal. Valve operators shall restrict closing to a rate requiring approximately 60 seconds, from fully open to fully closed.

2.4.4 Pressure Reducing Valves (Not Used)

2.4.5 Vacuum and Air Relief Valves

Vacuum and air relief valves shall be of the size shown and shall be of a type that will release air and prevent the formation of a vacuum. The

valves shall automatically release air when the lines are being filled with water and shall admit air into the line when water is being withdrawn in excess of the inflow. Valves shall be of the float operated, compound lever design and capable of automatically releasing accumulated air, gas or vapor from a pressurized fluid system while it is in operation.

An adjustable featured orifice shall be used to seal the valve discharge port with drip-tight shut-off. The orifice diameter must be sized for use within a given operating pressure range to insure maximum discharge capacity.

The float shall be of all stainless steel construction and capable of withstanding maximum system surge pressure without failure. The body and the cover shall be of cast iron and the valve internal parts shall be of stainless steel with a Buna-N(r) rubber seat.

2.5 VALVE BOXES

Valve boxes shall be cast iron or concrete, except that concrete boxes may be installed only in locations not subjected to vehicular traffic. Cast-iron boxes shall be extension type with slide-type adjustment and with flared base, or as indicated. The minimum thickness of metal shall be 3/16 inch. Concrete boxes shall be the standard product of a manufacturer of pre-cast concrete equipment. The word "WATER" shall be cast in the cover, unless indicated otherwise. The box length shall adapt, without full extension, to the depth of cover required over the pipe at the valve location.

2.6 VALVE PITS

Valve pits shall be constructed at locations indicated or as required above and in accordance with the details shown. Concrete shall have compressive strength of 3000 psi in accordance with Section 03300CAST-IN-PLACE STRUCTURAL CONCRETE.

2.7 FIRE HYDRANTS (NOT Used)

2.8 FIRE-HYDRANT HOSE HOUSES (Not used)

2.9 MISCELLANEOUS ITEMS

2.9.1 Service Clamps

Service clamps shall have a pressure rating not less than that of the pipe to be connected and shall be either the single or double flattened strap type. Clamps shall have a galvanized malleable-iron body with cadmium plated straps and nuts. Clamps shall have a rubber gasket cemented to the body.

2.9.2 Corporation Stops

Corporation stops shall have standard corporation stop thread conforming to AWWA C800 on the inlet end, with flanged joints, compression pattern flared tube couplings, or wiped joints for connections to goosenecks.

2.9.3 Goosenecks

Copper tubing for gooseneck connections shall conform to the applicable requirements of ASTM B 88, Type K, annealed. Length of cable requirement connections shall be in accordance with standard practice.

2.9.4 Service Stops

Service stops shall be water-works inverted-ground-key type, oval or round flow way, tee handle, without drain. Pipe connections shall be suitable for the type of service pipe used. All parts shall be of bronze with female iron-pipe-size connections or compression-pattern flared tube couplings, and shall be designed for a hydrostatic test pressure not less than 200 psi.

2.9.5 Tapping Sleeves

Tapping sleeves of the sizes indicated for connection to existing main shall be the cast gray, ductile, or malleable iron, split-sleeve type with flanged or grooved outlet, and with bolts, follower rings and gaskets on each end of the sleeve. Construction shall be suitable for a maximum working pressure of 150 psi. Bolts shall have square heads and hexagonal nuts. Longitudinal gaskets and mechanical joints with gaskets shall be as recommended by the manufacturer of the sleeve. When using grooved mechanical tee, it shall consist of an upper housing with full locating collar for rigid positioning which engages a machine-cut hole in pipe, encasing an elastomeric gasket which conforms to the pipe outside diameter around the hole and a lower housing with positioning lugs, secured together during assembly by nuts and bolts as specified, pre-torqued to 50 foot-pound.

2.9.6 Service Boxes

Service boxes shall be cast iron or concrete and shall be extension service boxes of the length required for the depth of the line, with either screw or slide-type adjustment. The boxes shall have housings of sufficient size to completely cover the service stop or valve and shall be complete with identifying covers.

2.9.7 Disinfection

Chlorinating materials shall conform to the following:

Chlorine, Liquid: AWWA B301.

Hypochlorite, Calcium and Sodium: AWWA B300.

2.9.8 Meters (Not Used)

2.10 METER VAULTS (NOT USED)

PART 3 EXECUTION

3.1 Waste Water Disposal Method

The method proposed for disposal of waste water from hydrostatic tests and disinfection, prior to performing hydrostatic tests.

3.2 Satisfactory Installation

A statement signed by the principal officer of the contracting firm stating that the installation is satisfactory and in accordance with the contract drawings and specifications, and the manufacturer's prescribed procedures and techniques, upon completion of the project and before final acceptance.

3.3 INSTALLATION

3.3.1 Cutting of Pipe

Cutting of pipe shall be done in a neat and workmanlike manner without damage to the pipe. Unless otherwise recommended by the manufacturer and authorized by the Contracting Officer, cutting shall be done with an approved type mechanical cutter. Wheel cutter shall be used when practicable. Copper tubing shall be cut square and all burrs shall be removed. Squeeze type mechanical cutters shall not be used for ductile iron.

3.3.2 Adjacent Facilities

3.3.2.1 Sewer Lines

Where the location of the water pipe is not clearly defined in dimensions on the drawings, the water pipe shall not be laid closer horizontally than 6 feet from a sewer except where the bottom of the water pipe will be at least 12 inches above the top of the sewer pipe, in which case the water pipe shall not be laid closer horizontally than 6 feet from the sewer. Where water lines cross under gravity-flow sewer lines, the sewer pipe, for a distance of at least 10 feet each side of the crossing, shall be fully encased in concrete or shall be made of pressure pipe with no joint located within 3 feet horizontally of the crossing. Water lines shall in all cases cross above sewage force mains or inverted siphons and shall be not less than 2 feet above the sewer main. Joints in the sewer main, closer horizontally than 3 feet to the crossing, shall be encased in concrete.

3.3.2.2 Water Lines

Water lines shall not be laid in the same trench with sewer lines, gas lines, fuel lines, or electric wiring.

3.3.2.3 Copper Tubing Lines

Copper tubing shall not be installed in the same trench with ferrous piping materials.

3.3.2.4 Nonferrous Metallic Pipe

Where nonferrous metallic pipe, e.g. copper tubing, crosses any ferrous

piping material, a minimum vertical separation of 12 inches shall be maintained between pipes.

3.3.2.5 Casing Pipe

Water pipe shall be encased in a sleeve of rigid conduit for the lengths shown. Where sleeves are required, in all other cases, the pipe sleeve shall be as specified. A minimum clearance of at least 2 inches between the inner wall of the sleeve and the maximum outside diameter of the sleeved pipe and joints shall be provided. Sand bedding or suitable pipe support shall be provided for the water pipe through the sleeve.

3.3.2.6 Structures

Where water pipe is required to be installed within 3 feet of existing structures, the water pipe shall be sleeved as required in Paragraph "Casing Pipe". The Contractor shall install the water pipe and sleeve ensuring that there will be no damage to the structures and no settlement or movement of foundations or footings.

3.3.3 Joint Deflection

3.3.3.1 Allowable for Reinforced Concrete Pipe (Not Used)

3.3.3.2 Offset for Flexible Plastic Pipe

Maximum offset in alignment between adjacent pipe joints shall be as recommended by the manufacturer and approved by the Contracting Officer, but shall not exceed 5 degrees.

3.3.3.3 Allowable for Ductile-Iron Pipe

The maximum allowable deflection shall be as given in AWWA C600. If the alignment requires deflection in excess of the above limitations, special bends or a sufficient number of shorter lengths of pipe shall be furnished to provide angular deflections within the limit set forth.

3.3.3.4 Allowable for Steel Pipe (Not Used)

3.3.3.5 Allowable for RPMP Pipe (Not Used)

3.3.4 Placing and Laying

Pipe and accessories shall be carefully lowered into the trench by means of derrick, ropes, belt slings, or other authorized equipment. Water-line materials shall not be dropped or dumped into the trench. Abrasion of the pipe coating shall be avoided. Except where necessary in making connections with other lines or as authorized by the Contracting Officer, pipe shall be laid with the bells facing in the direction of laying. The full length of each section of pipe shall rest solidly upon the pipe bed, with recesses excavated to accommodate bells, couplings, and joints. Pipe that has the grade or joint disturbed after laying shall be taken up and relaid. Pipe shall not be laid in water or when trench conditions are unsuitable for the work. Water shall be kept out of the trench until

joints are complete. When work is not in progress, open ends of pipe, fittings, and valves shall be securely closed so that no trench water, earth, or other substance will enter the pipes or fittings. Where any part of the coating or lining is damaged, the repair shall be made by and at the Contractor's expense in a satisfactory manner. Pipe ends left for future connections shall be valved, plugged, or capped, and anchored, as shown.

3.3.4.1 Reinforced Concrete Pipe Installation (Not Used)

3.3.4.2 Plastic Pipe Installation

PVC pipe shall be installed in accordance with AWWA M23.

3.3.4.3 Piping Connections

Where connections are made between new work and existing mains, the connections shall be made by using specials and fittings to suit the actual conditions. When made under pressure, these connections shall be installed using standard methods as approved by the Contracting Officer. Connections to existing asbestos-cement pipe shall be made in accordance with ACPPA Work Practices.

3.3.4.4 Penetrations

Pipe passing through walls of valve pits and structures shall be provided with ductile-iron or Schedule 40 steel wall sleeves. Annular space between walls and sleeves shall be filled with rich cement mortar. Annular space between pipe and sleeves shall be filled with mastic.

3.3.4.5 Flanged Pipe

Flanged pipe shall only be installed above ground or with the flanges in valve pits.

3.3.5 Jointing

3.3.5.1 Reinforced Concrete Pipe Requirements (Not Used)

3.3.5.2 PE Pipe Requirements (Not Used)

3.3.5.3 PVC Plastic Pipe Requirements

a. Pipe less than 4 inch diameter: Threaded joints shall be made by wrapping the male threads with approved thread tape or applying an approved lubricant, then threading the joining members together. The joint shall be tightened using strap wrenches to prevent damage to the pipe and/or fitting. To avoid excessive torque, joints shall be tightened no more than one thread past hand-tight. Preformed rubber-ring gaskets for elastomeric-gasket joints shall be made in accordance with ASTM F 477 and as specified. Pipe ends for push-on joints shall be beveled to facilitate assembly and marked to indicate when the pipe is fully seated. The gasket shall be prelubricated to prevent displacement. The gasket and ring groove in the bell or coupling shall match. The manufacturer

of the pipe or fitting shall supply the elastomeric gasket. Couplings shall be provided with stops or centering rings to assure that the coupling is centered on the joint. Solvent cement joints shall use sockets conforming to ASTM D 2467. The solvent cement used shall meet the requirements of ASTM D 2564; the joint assembly shall be made in accordance with ASTM D 2855 and the manufacturer's specific recommendations.

b. Pipe 4 through 12-inch diameter: Joints shall be elastomeric gasket as specified in AWWA C900. Jointing procedure shall be as specified for pipe less than 4-inch diameter with configuration using elastomeric ring gasket.

c. Pipe 14 through 36-inch diameter: Joints shall be elastomeric gasket push-on joints made in accordance with AWWA M23.

3.3.5.4 RTRP I, RTRP II and RPMP Pipe (Not Used)

3.3.5.5 Ductile-Iron Pipe Requirements

Mechanical and push-on type joints shall be installed in accordance with AWWA C600 for buried lines or AWWA C606 for grooved and shouldered pipe above ground or in pits.

3.3.5.6 Not Galvanized Steel Pipe Requirements (Not Used)

3.3.5.7 Galvanized Steel Pipe Requirements

Screw joints shall be made tight with a stiff mixture of graphite and oil, inert filler and oil, or with an approved graphite compound, applied with a brush to the male threads only. Compounds shall not contain lead.

3.3.5.8 Copper Tubing Requirements

Joints shall be made with flared fittings. The flared end tube shall be pulled tightly against the tapered part of the fitting by a nut which is part of the fitting, so there is metal-to-metal contact.

3.3.5.9 Bonded Joints Requirements

Bonded joints shall be installed in accordance with details specified for joints in paragraph JOINTS.

3.3.5.10 Isolation Joints and Dielectric Fittings

Isolation joints and dielectric fittings shall be installed in accordance with details specified in paragraph JOINTS. Dielectric unions shall be encapsulated in a field-poured coal-tar covering, with at least 1/8 inch thickness of coal tar over all fitting surfaces.

3.3.5.11 Transition Fittings

Connections between different types of pipe and accessories shall be made with transition fittings approved by the Contracting Officer.

3.3.6 Installation of Service Lines (Not Used)

3.3.7 Field Coating and Lining of Pipe

3.3.7.1 Steel Pipe 80 mm (3 In.) and Larger, Not Galvanized (Not Used)

3.3.7.2 Galvanized Steel Pipe, Field Coating

Field joints shall be given 1 coat of coal-tar primer and 2 coats of coal-tar enamel conforming to AWWA C203. The tests of the coating shall conform to AWWA C203, and any flaws or holidays found in the coating of pipe and joints shall be repaired by patching or other approved means; the repaired areas shall be at least equal in thickness to the minimum coating required for the pipe.

3.3.8 Setting of Fire Hydrants, Meters, Valves and Valve Boxes

3.3.8.1 Location of Fire Hydrants (Not Used)

3.3.8.2 Location of Meters (Not Used)

3.3.8.3 Location of Valves

After delivery, valves, including those in hydrants, shall be drained to prevent freezing and shall have the interiors cleaned of all foreign matter before installation. Stuffing boxes shall be tightened and hydrants and valves shall be fully opened and fully closed to ensure that all parts are in working condition. Check, pressure reducing, vacuum, and air relief valves shall be installed in valve pits. Valves and valve boxes shall be installed where shown or specified, and shall be set plumb. Valve boxes shall be centered on the valves. Boxes shall be installed over each outside gate valve unless otherwise shown. Where feasible, valves shall be located outside the area of roads and streets. Earth fill shall be tamped around each valve box or pit to a distance of 4 feet on all sides of the box, or the undisturbed trench face if less than 4 feet.

3.3.8.4 Location of Service Boxes (Not Used)

3.3.9 Tapped Tees and Crosses

Tapped tees and crosses for future connections shall be installed where shown.

3.3.10 Thrust Restraint

Plugs, caps, tees and bends deflecting 11.25 degrees or more, either vertically or horizontally, on waterlines 4 inches in diameter or larger, and fire hydrants shall be provided with thrust restraints. Valves shall be securely anchored or shall be provided with thrust restraints to prevent movement. Thrust restraints shall be either thrust blocks or, for ductile-iron pipes, restrained joints.

3.3.10.1 Thrust Blocks

Thrust blocking shall be concrete of a mix not leaner than: 1 cement, 2-1/2 sand, 5 gravel; and having a compressive strength of not less than 2,000 psi after 28 days. Blocking shall be placed between solid ground and the hydrant or fitting to be anchored. Unless otherwise indicated or directed, the base and thrust bearing sides of thrust blocks shall be poured directly against undisturbed earth. The sides of thrust blocks not subject to thrust may be poured against forms. The area of bearing shall be as shown or as directed. Blocking shall be placed so that the fitting joints will be accessible for repair. Steel rods and clamps, protected by galvanizing or by coating with bituminous paint, shall be used to anchor vertical down bends into gravity thrust blocks.

3.3.10.2 Restrained Joints

For ductile-iron pipe, restrained joints shall be designed by the Contractor or the pipe manufacturer in accordance with DIPRA-Restraint Design.

3.4 HYDROSTATIC TESTS

Where any section of a water line is provided with concrete thrust blocking for fittings or hydrants, the hydrostatic tests shall not be made until at least 5 days after installation of the concrete thrust blocking, unless otherwise approved.

3.4.1 Pressure Test

After the pipe is laid, the joints completed, fire hydrants permanently installed, and the trench partially backfilled leaving the joints exposed for examination, the newly laid piping or any valved section of piping shall, unless otherwise specified, be subjected for 1 hour to a hydrostatic pressure test of 200 psi. Water supply lines designated on the drawings shall be subjected for 1 hour to a hydrostatic pressure test of 200 psi. Each valve shall be opened and closed several times during the test. Exposed pipe, joints, fittings, hydrants, and valves shall be carefully examined during the partially open trench test. Joints showing visible leakage shall be replaced or remade as necessary. Cracked or defective pipe, joints, fittings, hydrants and valves discovered in consequence of this pressure test shall be removed and replaced with sound material, and the test shall be repeated until the test results are satisfactory. The requirement for the joints to remain exposed for the hydrostatic tests may be waived by the Contracting Officer when one or more of the following conditions is encountered:

a. Wet or unstable soil conditions in the trench.

b. Compliance would require maintaining barricades and walkways around and across an open trench in a heavily used area that would require continuous surveillance to assure safe conditions.

c. Maintaining the trench in an open condition would delay completion of the project.

The Contractor may request a waiver, setting forth in writing the reasons for the request and stating the alternative procedure proposed to comply with the required hydrostatic tests. Backfill placed prior to the tests shall be placed in accordance with the requirements of Section 02316a EXCAVATION, TRENCHING, AND BACKFILLING FOR UTILITIES SYSTEMS.

3.4.2 Leakage Test

Leakage test shall be conducted after the pressure tests have been satisfactorily completed. The duration of each leakage test shall be at least 2 hours, and during the test the water line shall be subjected to not less than 200 psi pressure. Water supply lines designated on the drawings shall be subjected to a pressure equal to 150 psi. Leakage is defined as the quantity of water to be supplied into the newly laid pipe, or any valved or approved section, necessary to maintain pressure within 5 psi of the specified leakage test pressure after the pipe has been filled with water and the air expelled. Piping installation will not be accepted if leakage exceeds the allowable leakage which is determined by the following formula:

L = 0.0001351ND(P raised to 0.5 power)

L = Allowable leakage in gallons per hour
N = Number of joints in the length of pipeline tested
D = Nominal diameter of the pipe in inches
P = Average test pressure during the leakage test, in psi gauge

Should any test of pipe disclose leakage greater than that calculated by the above formula, the defective joints shall be located and repaired until the leakage is within the specified allowance, without additional cost to the Government.

3.4.3 Time for Making Test

Except for joint material setting or where concrete thrust blocks necessitate a 5-day delay, pipelines jointed with rubber gaskets, mechanical or push-on joints, or couplings may be subjected to hydrostatic pressure, inspected, and tested for leakage at any time after partial completion of backfill. Cement-mortar lined pipe may be filled with water as recommended by the manufacturer before being subjected to the pressure test and subsequent leakage test.

3.4.4 Concurrent Hydrostatic Tests

The Contractor may elect to conduct the hydrostatic tests using either or both of the following procedures. Regardless of the sequence of tests employed, the results of pressure tests, leakage tests, and disinfection shall be as specified. Replacement, repair or retesting required shall be accomplished by the Contractor at no additional cost to the Government.

a. Pressure test and leakage test may be conducted concurrently.

b. Hydrostatic tests and disinfection may be conducted concurrently, using the water treated for disinfection to accomplish the

hydrostatic tests. If water is lost when treated for disinfection and air is admitted to the unit being tested, or if any repair procedure results in contamination of the unit, disinfection shall be reaccomplished.

3.5 BACTERIAL DISINFECTION (NOT USED)

3.6 CLEANUP

Upon completion of the installation of water lines, and appurtenances, all debris and surplus materials resulting from the work shall be removed.

-- End of Section --

This page was intentionally left blank for duplex printing.

SECTION TABLE OF CONTENTS

DIVISION 02 - SITE WORK

SECTION 02722A

AGGREGATE BASE COURSE

09/02

PART 1 GENERAL

1.1 REFERENCES
1.2 DEFINITIONS
1.2.1 Aggregate Base Course
1.2.2 Degree of Compaction
1.3 UNIT PRICES (not used)
1.4 SUBMITTALS
1.5 SAMPLING AND TESTING
1.5.1 Sampling
1.5.2 Tests
1.5.2.1 Sieve Analysis
1.5.2.2 Liquid Limit and Plasticity Index
1.5.2.3 Moisture-Density Determinations
1.5.2.4 Field Density Tests
1.5.2.5 Wear Test
1.5.3 Testing Frequency
1.5.3.1 Initial Tests
1.5.3.2 In Place Tests
1.6 WEATHER LIMITATIONS
1.7 PLANT, EQUIPMENT, AND TOOLS

PART 2 PRODUCTS

2.1 Waybills and Delivery Tickets
2.2 AGGREGATES
2.2.1 Coarse Aggregate
2.2.1.1 Aggregate Base Course
2.2.2 Fine Aggregate
2.2.2.1 Aggregate Base Course
2.2.3 Gradation Requirements
2.2.4 Liquid Limit and Plasticity Index

PART 3 EXECUTION

3.1 Sub Title
3.2 GENERAL REQUIREMENTS
3.3 OPERATION OF AGGREGATE SOURCES
3.4 STOCKPILING MATERIAL
3.5 PREPARATION OF UNDERLYING COURSE
3.6 INSTALLATION

3.6.1 Mixing the Materials
3.6.2 Placing
3.6.3 Grade Control
3.6.4 Edges of Base Course
3.6.5 Compaction
3.6.6 Thickness
3.6.7 Proof Rolling
3.6.8 Finishing
3.6.9 Smoothness
3.7 TRAFFIC
3.8 MAINTENANCE
3.9 DISPOSAL OF UNSATISFACTORY MATERIALS

-- End of Section Table of Contents --

SECTION 02722A

AGGREGATE BASE COURSE
09/02

PART 1 GENERAL

1.1 REFERENCES

The publications listed below form a part of this specification to the extent referenced. The publications are referred to in the text by basic designation only.

AMERICAN ASSOCIATION OF STATE HIGHWAY AND TRANSPORTATION OFFICIALS (AASHTO)

AASHTO T 180	(1997) Moisture-Density Relations of Soils Using a 10-lb Rammer and an 18-in Drop
AASHTO T 224	(1996) Correction for Coarse Particles in the Soil Compaction Test

AMERICAN SOCIETY FOR TESTING AND MATERIALS (ASTM)

ASTM C 29/C 29M	(1997) Bulk Density ("Unit Weight") and Voids in Aggregates
ASTM C 88	(1999a) Soundness of Aggregates by Use of Sodium Sulfate or Magnesium Sulfate
ASTM C 117	(1995) Materials Finer Than 75 micrometer (No. 200) Sieve in Mineral Aggregates by Washing
ASTM C 127	(1988; R 1993el) Specific Gravity and Absorption of Course Aggregate
ASTM C 128	(1997) Specific Gravity and Absorption of Fine Aggregate
ASTM C 131	(1996) Resistance to Degradation of Small-Size Coarse Aggregate by Abrasion and Impact in the Los Angeles Machine
ASTM C 136	(1996a) Sieve Analysis of Fine and Coarse Aggregates
ASTM D 75	(1987; R 1997) Sampling Aggregates
ASTM D 422	(1963; R 1998) Particle-Size Analysis of

	Soils
ASTM D 1556	(2000) Density and Unit Weight of Soil in Place by the Sand-Cone Method
ASTM D 1557	(1998) Laboratory Compaction Characteristics of Soil Using Modified Effort (56,000 ft-lbf/cu. ft.)
ASTM D 2167	(1994) Density and Unit Weight of Soil in Place by the Rubber Balloon Method
ASTM D 2487	(2000) Classification of Soils for Engineering Purposes (Unified Soil Classification System)
ASTM D 2922	(1996el) Density of Soil and Soil-Aggregate in Place by Nuclear Methods (Shallow Depth)
ASTM D 3017	(1988; R 1996el) Water Content of Soil and Rock in Place by Nuclear Methods (Shallow Depth)
ASTM D 4318	(2000) Liquid Limit, Plastic Limit, and Plasticity Index of Soils
ASTM E 11	(1995) Wire-Cloth Sieves for Testing Purposes

1.2 DEFINITIONS

For the purposes of this specification, the following definitions apply.

1.2.1 Aggregate Base Course

Aggregate base course (ABC) is well graded, durable aggregate uniformly moistened and mechanically stabilized by compaction.

1.2.2 Degree of Compaction

Degree of compaction shall be expressed as a percentage of the maximum density obtained by the test procedure presented in ASTM D 1557, Method D and corrected with AASHTO T 224.

1.3 UNIT PRICES (not used)

1.4 SUBMITTALS

Government approval is required for submittals with a "G" designation; submittals not having a "G" designation are for information only. The following shall be submitted in accordance with Section 01330 SUBMITTAL PROCEDURES:

SD-03 Product Data

Plant, Equipment, and Tools:

List of proposed equipment to be used in performance of construction work, including descriptive data.

Waybills and Delivery Tickets:

SD-06 Test Reports

Sampling and testing:
Field Density Tests:

Calibration curves and related test results prior to using the device or equipment being calibrated. Copies of field test results within 48 hours after the tests are performed. Certified copies of test results for approval not less than 30 days before material is required for the work.

1.5 SAMPLING AND TESTING

Sampling and testing shall be the responsibility of the Contractor. Sampling and testing shall be performed by a testing laboratory approved in accordance with Section 01451A CONTRACTOR QUALITY CONTROL. Work requiring testing will not be permitted until the testing laboratory has been inspected and approved. The materials shall be tested to establish compliance with the specified requirements; testing shall be performed at the specified frequency. The Contracting Officer may specify the time and location of the tests. Copies of test results shall be furnished to the Contracting Officer within 24 hours of completion of the tests.

1.5.1 Sampling

Samples for laboratory testing shall be taken in conformance with ASTM D 75. When deemed necessary, the sampling will be observed by the Contracting Officer.

1.5.2 Tests

The following tests shall be performed in conformance with the applicable standards listed.

1.5.2.1 Sieve Analysis

Sieve analysis shall be made in conformance with ASTM C 117 and ASTM C 136. Sieves shall conform to ASTM E 11.

1.5.2.2 Liquid Limit and Plasticity Index

Liquid limit and plasticity index shall be determined in accordance with ASTM D 4318.

1.5.2.3 Moisture-Density Determinations

The maximum density and optimum moisture content shall be determined in accordance with ASTM D 1557. To maintain the same percentage of coarse material, the "remove and replace" procedure as described in the NOTE 8 in Paragraph 7.2 of AASHTO T 180 shall be used.

1.5.2.4 Field Density Tests

Density shall be field measured in accordance with ASTM D 2922. Tests performed in accordance with ASTM D 2922 result in a wet unit weight of soil and when using this method, ASTM D 3017 shall be used to determine the moisture content of the soil. The calibration curves furnished with the moisture gauges shall also be checked along with density calibration checks as described in ASTM D 3017. The calibration checks of both the density and moisture gauges shall be made by the prepared containers of material method, as described in paragraph Calibration of ASTM D 2922, on each different type of material being tested at the beginning of a job and at intervals as directed.]

1.5.2.5 Wear Test

Wear tests shall be made on ABC course material in conformance with ASTM C 131.

1.5.3 Testing Frequency

1.5.3.1 Initial Tests

One of each of the following tests shall be performed on the proposed material prior to commencing construction to demonstrate that the proposed material meets all specified requirements when furnished. If materials from more than one source are going to be utilized, this testing shall be completed for each source.

a. Sieve Analysis [including No. 635 size material].
b. Liquid limit and plasticity index.
c. Moisture-density relationship.
d. Wear.

1.5.3.2 In Place Tests

Each of the following tests shall be performed on samples taken from the placed and compacted ABC. Samples shall be taken and tested at the rates indicated.

a. Density tests shall be performed on every lift of material placed and at a frequency of one set of tests for every 250 square yards or portion thereof, of completed area.

b. Sieve Analysis including No. 635 size material shall be performed for every 500 tons or portion thereof, of material placed.

c. Liquid limit and plasticity index tests shall be performed at the same frequency as the sieve analysis.

1.6 WEATHER LIMITATIONS

Construction shall be done when the atmospheric temperature is above 35 degrees F. When the temperature falls below 35 degrees F, the Contractor shall protect all completed areas by approved methods against detrimental effects of freezing. Completed areas damaged by freezing, rainfall, or other weather conditions shall be corrected to meet specified requirements.

1.7 PLANT, EQUIPMENT, AND TOOLS

All plant, equipment, and tools used in the performance of the work will be subject to approval before the work is started and shall be maintained in satisfactory working condition at all times. The equipment shall be adequate and shall have the capability of producing the required compaction, meeting grade controls, thickness control, and smoothness requirements as set forth herein.

PART 2 PRODUCTS

2.1 Waybills and Delivery Tickets

Copies of waybills and delivery tickets during the progress of the work. Before the final statement is allowed, the Contractor shall file certified waybills and certified delivery tickets for all aggregates actually used.

2.2 AGGREGATES

The ABC shall consist of clean, sound, durable particles of crushed stone, crushed gravel, crushed recycled concrete, angular sand, or other approved material. ABC shall be free of lumps of clay, organic matter, and other objectionable materials or coatings. The portion retained on the No. 4 sieve shall be known as coarse aggregate; that portion passing the No. 4 sieve shall be known as fine aggregate.

2.2.1 Coarse Aggregate

Coarse aggregates shall be angular particles of uniform density. When the coarse aggregate is supplied from more than one source, aggregate from each source shall meet the specified requirements and shall be stockpiled separately.

a. Crushed Gravel: Crushed gravel shall be manufactured by crushing gravels, and shall meet all the requirements specified below.

b. Crushed Stone: Crushed stone shall consist of freshly mined quarry rock, and shall meet all the requirements specified below.

c. Crushed Recycled Concrete: Crushed recycled concrete shall consist of previously hardened portland cement concrete or other concrete containing pozzolanic binder material. The recycled material shall be free of all reinforcing steel, bituminous concrete surfacing, and any other foreign material and shall be crushed and processed to meet the required gradations for coarse aggregate. Crushed recycled concrete shall meet all

other applicable requirements specified below.

2.2.1.1 Aggregate Base Course

ABC coarse aggregate shall not show more than 50 percent loss when subjected to the Los Angeles abrasion test in accordance with ASTM C 131. The amount of flat and elongated particles shall not exceed 30 percent. A flat particle is one having a ratio of width to thickness greater than 3; an elongated particle is one having a ratio of length to width greater than 3. In the portion retained on each sieve specified, the crushed aggregates shall contain at least 50 percent by weight of crushed pieces having two or more freshly fractured faces with the area of each face being at least equal to 75 percent of the smallest midsectional area of the piece. When two fractures are contiguous, the angle between planes of the fractures must be at least 30 degrees in order to count as two fractured faces. Crushed gravel shall be manufactured from gravel particles 50 percent of which, by weight, are retained on the maximum size sieve listed in TABLE 1.

2.2.2 Fine Aggregate

Fine aggregates shall be angular particles of uniform density. When the fine aggregate is supplied from more than one source, aggregate from each source shall meet the specified requirements.

2.2.2.1 Aggregate Base Course

ABC fine aggregate shall consist of screenings, angular sand, crushed recycled concrete fines, or other finely divided mineral matter processed or naturally combined with the coarse aggregate.

2.2.3 Gradation Requirements

The specified gradation requirements shall apply to the completed base course. The aggregates shall have a maximum size of 1 1/2 inches and shall be continuously well graded within the limits specified in TABLE 1. Sieves shall conform to ASTM E 11.

TABLE I. GRADATION OF AGGREGATES

Percentage by Weight Passing Square-Mesh Sieve

Sieve Designation	Select Material Type A	Select Material Type B	Aggregate Base
3 inch	100	---	---
1-1/2 inch	---	100	---
1-1/4 inch	---	---	---
No. 4	30-75	30-70	38-65
No. 8	20-60	20-60	25-60
No. 30	10-40	10-40	10-40
No. 200	0-12	0-12	3-12

NOTE 1: Particles having diameters less than 0.0008 inch shall not be in

excess of 3 percent by weight of the total sample tested.

NOTE 2: The values are based on aggregates of uniform specific gravity. If materials from different sources are used for the coarse and fine aggregates, they shall be tested in accordance with ASTM C 127 and ASTM C 128 to determine their specific gravities. If the specific gravities vary by more than 10 percent, the percentages passing the various sieves shall be corrected as directed by the Contracting Officer.

2.2.4 Liquid Limit and Plasticity Index

Liquid limit and plasticity index requirements shall apply to the completed course and shall also apply to any component that is blended to meet the required gradation. The portion of any component or of the completed course passing the No. 40 sieve shall be either nonplastic or have a liquid limit not greater than 25 and a plasticity index not greater than 5. Liquid Limit shall be tested in accordance with AASHTO T-89 and Plasticity Index shall be tested in accordancee with AASHTO - T146, Method A.

PART 3 EXECUTION

3.1 Sub Title

Text

3.2 GENERAL REQUIREMENTS

When the ABC is constructed in more than one layer, the previously constructed layer shall be cleaned of loose and foreign matter by sweeping with power sweepers or power brooms, except that hand brooms may be used in areas where power cleaning is not practicable. Adequate drainage shall be provided during the entire period of construction to prevent water from collecting or standing on the working area. Line and grade stakes shall be provided as necessary for control. Grade stakes shall be in lines parallel to the centerline of the area under construction and suitably spaced for string lining.

3.3 OPERATION OF AGGREGATE SOURCES

Aggregates shall be obtained from offsite sources.

3.4 STOCKPILING MATERIAL

Prior to stockpiling of material, storage sites shall be cleared and leveled by the Contractor. All materials, including approved material available from excavation and grading, shall be stockpiled in the manner and at the locations designated. Aggregates shall be stockpiled on the cleared and leveled areas designated by the Contracting Officer to prevent segregation. Materials obtained from different sources shall be stockpiled separately.

3.5 PREPARATION OF UNDERLYING COURSE

Prior to constructing the ABC, the underlying course or subgrade shall be cleaned of all foreign substances. At the time of construction of the ABC, the underlying course shall contain no frozen material. The surface of the underlying course or subgrade shall meet specified compaction and surface tolerances. The underlying course shall conform to Section 02300A EARTHWORK. Ruts or soft yielding spots in the underlying courses, areas having inadequate compaction, and deviations of the surface from the requirements set forth herein shall be corrected by loosening and removing soft or unsatisfactory material and by adding approved material, reshaping to line and grade, and re-compacting to specified density requirements. For cohesionless underlying courses containing sands or gravels, as defined in ASTM D 2487, the surface shall be stabilized prior to placement of the ABC Stabilization shall be accomplished by mixing ABC into the underlying course and compacting by approved methods. The stabilized material shall be considered as part of the underlying course and shall meet all requirements of the underlying course. The finished underlying course shall not be disturbed by traffic or other operations and shall be maintained by the Contractor in a satisfactory condition until the ABC.

3.6 INSTALLATION

3.6.1 Mixing the Materials

The coarse and fine aggregates shall be mixed in a stationary plant, or in a traveling plant or bucket loader on an approved paved working area. The Contractor shall make adjustments in mixing procedures or in equipment as directed to obtain true grades, to minimize segregation or degradation, to obtain the required water content, and to insure a satisfactory ABC meeting all requirements of this specification.

3.6.2 Placing

The mixed material shall be placed on the prepared subgrade or subbase in layers of uniform thickness with an approved spreader. When a compacted layer 6 inches or less in thickness is required, the material shall be placed in a single layer. When a compacted layer in excess of 6 inches is required, the material shall be placed in layers of equal thickness. No layer shall exceed 6 inches or less than 3 inches when compacted. The layers shall be so placed that when compacted they will be true to the grades or levels required with the least possible surface disturbance. Where the ABC is placed in more than one layer, the previously constructed layers shall be cleaned of loose and foreign matter by sweeping with power sweepers, power brooms, or hand brooms, as directed. Such adjustments in placing procedures or equipment shall be made as may be directed to obtain true grades, to minimize segregation and degradation, to adjust the water content, and to insure an acceptable ABC.

3.6.3 Grade Control

The finished and completed ABC shall conform to the lines, grades, and cross sections shown. Underlying material(s) shall be excavated and prepared at sufficient depth for the required ABC thickness so that the finished ABC with the subsequent surface course will meet the designated grades.

3.6.4 Edges of Base Course

The ABC shall be placed so that the completed section will be a minimum of 5 feet wider, on all sides, than the next layer that will be placed above it. Additionally, approved fill material shall be placed along the outer edges of ABC in sufficient quantities to compact to the thickness of the course being constructed, or to the thickness of each layer in a multiple layer course, allowing in each operation at least a 2 foot width of this material to be rolled and compacted simultaneously with rolling and compacting of each layer of ABC. If this base course material is to be placed adjacent to another pavement section, then the layers for both of these sections shall be placed and compacted along this edge at the same time.

3.6.5 Compaction

Each layer of the ABC shall be compacted as specified with approved compaction equipment. Water content shall be maintained during the compaction procedure to within plus or minus 3 percent of the optimum water content determined from laboratory tests as specified in paragraph SAMPLING AND TESTING. Rolling shall begin at the outside edge of the surface and proceed to the center, overlapping on successive trips at least one-half the width of the roller. Alternate trips of the roller shall be slightly different lengths. Speed of the roller shall be such that displacement of the aggregate does not occur. In all places not accessible to the rollers, the mixture shall be compacted with hand-operated power tampers. Compaction shall continue until each layer has a degree of compaction that is at least 95 percent of laboratory maximum density through the full depth of the layer. The Contractor shall make such adjustments in compacting or finishing procedures as may be directed to obtain true grades, to minimize segregation and degradation, to reduce or increase water content, and to ensure a satisfactory ABC. Any materials that are found to be unsatisfactory shall be removed and replaced with satisfactory material or reworked, as directed, to meet the requirements of this specification.

3.6.6 Thickness

Compacted thickness of the aggregate course shall be as indicated. No individual layer shall exceed 6 inches nor be less than 3 inches in compacted thickness. The total compacted thickness of the ABC course shall be within 1/2 inch of the thickness indicated. Where the measured thickness is more than 1/2 inch deficient, such areas shall be corrected by scarifying, adding new material of proper gradation, re-blading, and re-compacting as directed. Where the measured thickness is more than 1/2 inch thicker than indicated, the course shall be considered as conforming to the specified thickness requirements. Average job thickness shall be the average of all thickness measurements taken for the job, but shall be within 1/4 inch of the thickness indicated. The total thickness of the ABC course shall be measured at intervals in such a manner as to ensure one measurement for each 500 square yards of base course. Measurements shall be made in 3 inch diameter test holes penetrating the base course.

3.6.7 Proof Rolling

Proof rolling of the areas indicated shall be in addition to the compaction specified and shall consist of the application of 30 coverages with a heavy pneumatic-tired roller having four or more tires, each loaded to a minimum of 30,000 pounds and inflated to a minimum of 150 psi. In areas designated, proof rolling shall be applied to the top of the underlying material on which ABC is laid and to each layer of ABC. Water content of the underlying material shall be maintained at optimum or at the percentage directed from start of compaction to completion of proof rolling of that layer. Water content of each layer of the ABC shall be maintained at the optimum percentage directed from start of compaction to completion of proof rolling. Any ABC materials or any underlying materials that produce unsatisfactory results by proof rolling shall be removed and replaced with satisfactory materials, re-compacted and proof rolled to meet these specifications.

3.6.8 Finishing

The surface of the top layer of ABC shall be finished after final compaction and proof rolling by cutting any overbuild to grade and rolling with a steel-wheeled roller. Thin layers of material shall not be added to the top layer of base course to meet grade. If the elevation of the top layer of ABC is 1/2 inch or more below grade, then the top layer should be scarified to a depth of at least 3 inches and new material shall be blended in and compacted. Adjustments to rolling and finishing procedures shall be made as directed to minimize segregation and degradation, obtain grades, maintain moisture content, and insure an acceptable base course. Should the surface become rough, corrugated, uneven in texture, or traffic marked prior to completion, the unsatisfactory portion shall be scarified, reworked and recompacted or it shall be replaced as directed.

3.6.9 Smoothness

The surface of the top layer shall show no deviations in excess of 3/8 inch when tested with a 10 foot straightedge. Measurements shall be taken in successive positions parallel to the centerline of the area to be paved. Measurements shall also be taken perpendicular to the centerline at 50-foot intervals. Deviations exceeding this amount shall be corrected by removing material and replacing with new material, or by reworking existing material and compacting it to meet these specifications.

3.7 TRAFFIC

Completed portions of the ABC course may be opened to limited traffic, provided there is no marring or distorting of the surface by the traffic. Heavy equipment shall not be permitted except when necessary to construction, and then the area shall be protected against marring or damage to the completed work.

3.8 MAINTENANCE

The ABC shall be maintained in a satisfactory condition until the full pavement section is completed and accepted. Maintenance shall include immediate repairs to any defects and shall be repeated as often as

necessary to keep the area intact. Any ABC that is not paved over prior to the onset of winter, shall be retested to verify that it still complies with the requirements of this specification. Any area of ABC that is damaged shall be reworked or replaced as necessary to comply with this specification.

3.9 DISPOSAL OF UNSATISFACTORY MATERIALS

Any unsuitable materials that must be removed shall be disposed of as directed. No additional payments will be made for materials that must be replaced.

-- End of Section --

This page was intentionally left blank for duplex printing.

SECTION TABLE OF CONTENTS

DIVISION 02 - SITE WORK

SECTION 02741A

HOT-MIX ASPHALT (HMA)

09/02

PART 1 GENERAL

1.1 REFERENCES
1.2 DESCRIPTION OF WORK
1.3 SUBMITTALS
1.4 ASPHALT MIXING PLANT
1.5 HAULING EQUIPMENT
1.6 ASPHALT PAVERS
1.6.1 Receiving Hopper
1.6.2 Automatic Grade Controls
1.7 ROLLERS
1.8 WEATHER LIMITATIONS

PART 2 PRODUCTS

2.1 AGGREGATES
2.1.1 Coarse Aggregate
2.1.2 Fine Aggregate
2.1.3 Mineral Filler
2.1.4 Aggregate Gradation
2.2 ASPHALT CEMENT BINDER
2.3 MIX DESIGN
2.3.1 JMF Requirements
2.3.2 Adjustments to Field JMF

PART 3 EXECUTION

3.1 PREPARATION OF ASPHALT BINDER MATERIAL
3.2 PREPARATION OF MINERAL AGGREGATE
3.3 PREPARATION OF HOT-MIX ASPHALT MIXTURE
3.4 PREPARATION OF THE UNDERLYING SURFACE
3.5 TESTING LABORATORY
3.6 TRANSPORTING AND PLACING
3.6.1 Transporting
3.6.2 Placing
3.7 COMPACTION OF MIXTURE
3.8 JOINTS
3.8.1 Transverse Joints
3.8.2 Longitudinal Joints
3.9 CONTRACTOR QUALITY CONTROL
3.9.1 General Quality Control Requirements

3.9.2 Quality Control Testing
3.9.2.1 Asphalt Content
3.9.2.2 Gradation
3.9.2.3 Temperatures
3.9.2.4 Aggregate Moisture
3.9.2.5 Moisture Content of Mixture
3.9.2.6 Laboratory Air Voids, Marshall Stability and Flow
3.9.2.7 In-Place Density
3.9.2.8 Grade and Smoothness
3.9.2.9 Additional Testing
3.9.2.10 QC Monitoring
3.9.3 Sampling
3.10 MATERIAL ACCEPTANCE AND PERCENT PAYMENT
3.10.1 Percent Payment
3.10.2 Sublot Sampling
3.10.3 Additional Sampling and Testing
3.10.4 Laboratory Air Voids
3.10.5 Mean Absolute Deviation
3.10.6 In-place Density
3.10.6.1 General Density Requirements
3.10.6.2 Mat and Joint Densities
3.10.6.3 Pay Factor Based on In-place Density
3.10.7 Grade
3.10.8 Surface Smoothness
3.10.8.1 Smoothness Requirements
3.10.8.2 Testing Method
3.10.8.3 Payment Adjustment for Smoothness

-- End of Section Table of Contents --

SECTION 02741A

HOT-MIX ASPHALT (HMA)
09/02

PART 1 GENERAL

1.1 REFERENCES

The publications listed below form a part of this specification to the extent referenced. The publications are referred to in the text by basic designation only.

AMERICAN ASSOCIATION OF STATE HIGHWAY AND TRANSPORTATION OFFICIALS (AASHTO)

AASHTO MP 1	(1998)Provisional Specification for Performance Graded Asphalt Binder
AASHTO MP 2	(1998; Interim 1999) Superpave Volumetric Mix Design
AASHTO TP53	(1998; Interim 1999) Determining Asphalt Content of Hot Mix Asphalt by the Ignition Method

AMERICAN SOCIETY FOR TESTING AND MATERIALS (ASTM)

ASTM C 29/C 29M	(1997) Bulk Density ("Unit Weight") and Voids in Aggregates
ASTM C 88	(1999a) Soundness of Aggregates by Use of Sodium Sulfate or Magnesium Sulfate
ASTM C 117	(1995) Materials Finer than 75 micrometer (No. 200) Sieve in Mineral Aggregates by Washing
ASTM C 131	(1996) Resistance to Degradation of Small-Size Coarse Aggregate by Abrasion and Impact in the Los Angeles Machine
ASTM C 136	(1996a) Sieve Analysis of Fine and Coarse Aggregates
ASTM C 566	(1997) Evaporable Total Moisture Content of Aggregate by Drying
ASTM C 1252	(1998) Uncompacted Void Content of Fine Aggregate (as Influenced by Particle Shape, Surface Texture, and Grading)

ASTM D 140	(1998) Sampling Bituminous Materials
ASTM D 242	(1995) Mineral Filler for Bituminous Paving Mixtures
ASTM D 946	(1999) Penetration-Graded Asphalt Cement for Use in Pavement Construction
ASTM D 995	(1995b) Mixing Plants for Hot-Mixed, Hot-Laid Bituminous Paving Mixtures
ASTM D 1461	(1985)) Moisture or Volatile Distillates in Bituminous Paving Mixtures
ASTM D 1559	(1989) Resistance to Plastic Flow of Bituminous Mixtures Using Marshall Apparatus
ASTM D 2041	(1995) Theoretical Maximum Specific Gravity and Density of Bituminous Paving Mixtures
ASTM D 2172	(1995) Quantitative Extraction of Bitumen from Bituminous Paving Mixtures
ASTM D 2419	(1995) Sand Equivalent Value of Soils and Fine Aggregate
ASTM D 2489	(1984; R 1994el) Degree of Particle Coating of Bituminous-Aggregate Mixtures
ASTM D 2726	(1996el) Bulk Specific Gravity and Density of Non-Absorptive Compacted Bituminous Mixture
ASTM D 2950	(1997) Density of Bituminous Concrete in Place by Nuclear Method
ASTM D 3381	(1999) Viscosity-Graded Asphalt Cement for Use in Pavement Construction
ASTM D 3665	(1999) Random Sampling of Construction Materials
ASTM D 3666	(1998) Minimum Requirements for Agencies Testing and Inspecting Bituminous Paving Materials
ASTM D 4125	(1994el)Asphalt Content of Bituminous Mixtures by the Nuclear Method
ASTM D 4791	(1999) Flat Particles, Elongated Particles, or Flat and Elongated Particles

	in Coarse Aggregate
ASTM D 4867/D 4867M	(1996) Effect of Moisture on Asphalt Concrete Paving Mixtures
ASTM D 5444	(1998) Mechanical Size Analysis of Extracted Aggregate
ASTM D 6307	(1998) Asphalt Content of Hot Mix Asphalt by Ignition Method

ASPHALT INSTITUTE (AI)

AI MS-2	(1997) Mix Design Methods for Asphalt Concrete and Other Hot-Mix Types
AI MS-22	(1998; 2nd Edition) Construction of Hot-Mix Asphalt Pavements

STATE OF CALIFORNIA DEPARTMENT OF TRANSPORTATION (CDT)

CDT Test 526	(1978) Operation of California Profilograph and Evaluation of Profiles

U.S. ARMY CORPS OF ENGINEERS (USACE)

COE CRD-C 171	(1995) Test Method for Determining Percentage of Crushed Particles in Aggregate

1.2 DESCRIPTION OF WORK

The work shall consist of pavement courses composed of mineral aggregate and asphalt material heated and mixed in a central mixing plant and placed on a prepared course. HMA designed and constructed in accordance with this section shall conform to the lines, grades, thicknesses, and typical cross sections shown on the drawings. Each course shall be constructed to the depth, section, or elevation required by the drawings and shall be rolled, finished, and approved before the placement of the next course.

1.3 SUBMITTALS

Government approval is required for submittals with a "G" designation; submittals not having a "G" designation are for information only. The following shall be submitted in accordance with Section 01330 SUBMITTAL PROCEDURES:

SD-03 Product Data

Mix Design: G
Proposed JMF.

Contractor Quality Control: G
Quality Control Plan.

Material Acceptance and Percent Payment: G
Acceptance Test Results and Pay Calculations.

SD-07 Certificates

Asphalt Cement Binder: G
Copies of certified test data.

Testing Laboratory:
Certification of Compliance.

Plant Scale Calibration Certification

1.4 ASPHALT MIXING PLANT

Plants used for the preparation of hot-mix asphalt shall conform to the requirements of ASTM D 995 with the following changes:

a. Truck Scales. The asphalt mixture shall be weighed on approved certified scales at the Contractor's expense. Scales shall be inspected and sealed at least annually by an approved calibration laboratory.

b. Not Used

c. Inspection of Plant. The Contracting Officer shall have access at all times, to all areas of the plant for checking adequacy of equipment; inspecting operation of the plant; verifying weights, proportions, and material properties; checking the temperatures maintained in the preparation of the mixtures and for taking samples. The Contractor shall provide assistance as requested, for the Government to procure any desired samples.

d. Storage Bins. Use of storage bins for temporary storage of hot-mix asphalt will be permitted as follows:

(1) The asphalt mixture may be stored in non-insulated storage bins for a period of time not exceeding 3 hours.

(2) The asphalt mixture may be stored in insulated storage bins for a period of time not exceeding 8 hours. The mix drawn from bins shall meet the same requirements as mix loaded directly into trucks.

1.5 HAULING EQUIPMENT

Trucks used for hauling hot-mix asphalt shall have tight, clean, and smooth metal beds. To prevent the mixture from adhering to them, the truck beds shall be lightly coated with a minimum amount of paraffin oil, lime solution, or other approved material. Petroleum based products shall not be used as a release agent. Each truck shall have a suitable cover to protect the mixture from adverse weather. When necessary to ensure that the mixture will be delivered to the site at the specified temperature, truck beds shall be insulated or heated and covers (tarps) shall be securely fastened.

1.6 ASPHALT PAVERS

Asphalt pavers shall be self-propelled, with an activated screed, heated as necessary, and shall be capable of spreading and finishing courses of hot-mix asphalt which will meet the specified thickness, smoothness, and grade. The paver shall have sufficient power to propel itself and the hauling equipment without adversely affecting the finished surface.

1.6.1 Receiving Hopper

The paver shall have a receiving hopper of sufficient capacity to permit a uniform spreading operation. The hopper shall be equipped with a distribution system to place the mixture uniformly in front of the screed without segregation. The screed shall effectively produce a finished surface of the required evenness and texture without tearing, shoving, or gouging the mixture.

1.6.2 Automatic Grade Controls

If an automatic grade control device is used, the paver shall be equipped with a control system capable of automatically maintaining the specified screed elevation. The control system shall be automatically actuated from either a reference line and/or through a system of mechanical sensors or sensor-directed mechanisms or devices which will maintain the paver screed at a predetermined transverse slope and at the proper elevation to obtain the required surface. The transverse slope controller shall be capable of maintaining the screed at the desired slope within plus or minus 0.1 percent. A transverse slope controller shall not be used to control grade. The controls shall be capable of working in conjunction with any of the following attachments:

a. Ski-type device of not less than 30 feet in length.

b. Taut stringline set to grade.

c. Short ski or shoe for joint matching.

Laser control.

1.7 ROLLERS

Rollers shall be in good condition and shall be operated at slow speeds to avoid displacement of the asphalt mixture. The number, type, and weight of rollers shall be sufficient to compact the mixture to the required density while it is still in a workable condition. Equipment which causes excessive crushing of the aggregate shall not be used.

1.8 WEATHER LIMITATIONS

The hot-mix asphalt shall not be placed upon a wet surface or when the surface temperature of the underlying course is less than specified in Table 1. The temperature requirements may be waived by the Contracting Officer, if requested; however, all other requirements, including

compaction, shall be met.

Table 1. Surface Temperature Limitations of Underlying Course

Mat Thickness, inches	Degrees F
3 or greater	40
Less than 3	45

PART 2 PRODUCTS

2.1 AGGREGATES

Aggregates shall consist of crushed stone, crushed gravel, crushed slag, screenings, natural sand and mineral filler, as required. The portion of material retained on the No. 4 sieve is coarse aggregate. The portion of material passing the No. 4 sieve and retained on the No. 200 sieve is fine aggregate. The portion passing the No. 200 sieve is defined as mineral filler.

2.1.1 Coarse Aggregate

Coarse aggregate shall consist of sound, tough, durable particles, free from films of material that would prevent thorough coating and bonding with the asphalt material and free from organic matter and other deleterious substances. All individual coarse aggregate sources shall meet the following requirements:

a. The percentage of loss shall not be greater than 40 percent after 500 revolutions when tested in accordance with ASTM C 131.

b. The percentage of loss shall not be greater than 18 percent after five cycles when tested in accordance with ASTM C 88 using magnesium sulfate or 12 percent when using sodium sulfate.

c. At least 75 percent by weight of coarse aggregate shall have at least two or more fractured faces when tested in accordance with COE CRD-C 171. Fractured faces shall be produced by crushing.

d. The particle shape shall be essentially cubical and the aggregate shall not contain more than 20% percent, by weight, of flat and elongated particles (3:1 ratio of maximum to minimum) when tested in accordance with ASTM D 4791.

e. Slag shall be air-cooled, blast furnace slag, and shall have a compacted weight of not less than 75 lb/cu ft when tested in accordance with ASTM C 29/C 29M.

2.1.2 Fine Aggregate

Fine aggregate shall consist of clean, sound, tough, durable particles. The aggregate particles shall be free from coatings of clay, silt, or any

objectionable material and shall contain no clay balls. All individual fine aggregate sources shall have a sand equivalent value not less than 45 when tested in accordance with ASTM D 2419.

The fine aggregate portion of the blended aggregate shall have an uncompacted void content not less than 43.0 percent when tested in accordance with ASTM C 1252 Method A.

2.1.3 Mineral Filler

Mineral filler shall be nonplastic material meeting the requirements of ASTM D 242.

2.1.4 Aggregate Gradation

The combined aggregate gradation shall conform to gradations specified in Table 2, when tested in accordance with ASTM C 136 and ASTM C 117, and shall not vary from the low limit on one sieve to the high limit on the adjacent sieve or vice versa, but grade uniformly from coarse to fine.

Table 2. Aggregate Gradations

Sieve Size, inch	Gradation 1 Percent Passing by Mass	Gradation 2 Percent Passing by Mass	Gradation 3 Percent Passing by Mass
1	100	---	---
3/4	76-96	100	---
1/2	68-88	76-96	100
3/8	60-82	69-89	76-96
No. 4	45-67	53-73	58-78
No. 8	32-54	38-60	40-60
No. 16	22-44	26-48	28-48
No. 30	15-35	18-38	18-38
No. 50	9-25	11-27	11-27
No. 100	6-18	6-18	6-18
No. 200	3-6	3-6	3-6

2.2 ASPHALT CEMENT BINDER

Asphalt cement binder shall conform to ASTM D 4402 Performance Grade (PG) PG-70-10. The Contracting Officer may sample and test the binder at the mix plant at any time before or during mix production. Samples for this verification testing shall be obtained by the Contractor in accordance with ASTM D 140 and in the presence of the Contracting Officer. These samples shall be furnished to the Contracting Officer for the verification testing, which shall be at no cost to the Contractor.

2.3 MIX DESIGN

The Contractor shall develop the mix design. The asphalt mix shall be composed of a mixture of well-graded aggregate, mineral filler if required, and asphalt material. The aggregate fractions shall be sized, handled in

separate size groups, and combined in such proportions that the resulting mixture meets the grading requirements of the job mix formula (JMF). No hot-mix asphalt for payment shall be produced until a JMF has been approved. The hot-mix asphalt shall be designed using procedures contained in AI MS-2 and the criteria shown in Table 3. If the Tensile Strength Ratio (TSR) of the composite mixture, as determined by ASTM D 4867/D 4867M is less than 75, the aggregates shall be rejected or the asphalt mixture treated with an approved anti-stripping agent. The amount of anti-stripping agent added shall be sufficient to produce a TSR of not less than 75. If an antistrip agent is required, it shall be provided by the Contractor at no additional cost.

At the option of the contractor a currently used ADOT superpave hot mix may be used in lieu of developing a new hot mix design study as described herein. The superpave volumetric mix shall be designed in accordance with AASHTO MP 2.

2.3.1 JMF Requirements

The job mix formula shall be submitted in writing by the Contractor for approval at least 14 days prior to the start of the paving work and shall include as a minimum:

a. Percent passing each sieve size.
b. Percent of asphalt cement.
c. Percent of each aggregate and mineral filler to be used.
d. Asphalt viscosity grade, penetration grade, or performance grade.
e. Number of blows of hammer per side of molded specimen.
f. Laboratory mixing temperature.
g. Lab compaction temperature.
h. Temperature-viscosity relationship of the asphalt cement.
i. Plot of the combined gradation on the 0.45 power gradation chart, stating the nominal maximum size.
j. Graphical plots of stability, flow, air voids, voids in the mineral aggregate, and unit weight versus asphalt content as shown in AI MS-2.
k. Specific gravity and absorption of each aggregate.
l. Percent natural sand.
m. Percent particles with 2 or more fractured faces (in coarse aggregate).
n. Fine aggregate angularity.
o. Percent flat or elongated particles (in coarse aggregate).
p. Tensile Strength Ratio(TSR).
q. Antistrip agent (if required) and amount.
r. List of all modifiers and amount.
s. Percentage and properties (asphalt content, binder properties, and aggregate properties) of reclaimed asphalt pavement (RAP) in accordance with paragraph RECYCLED HOT-MIX ASPHALT, if RAP is used.

Table 3. Marshall Design Criteria

Test Property	75 Blow Mix
Stability, pounds minimum	*1800
Flow, 0.01 inch	8-16
Air voids, percent	3-5
Percent Voids in mineral aggregate VMA, (minimum)	

Nominal Maximum Size/ Designation (mm)	Maximum Size (mm)	Minimum VMA (percent)
9.5	12.5	15
12.5	19.0	14
19.0	25.0	13
25.0	37.5	12
37.5	50.0	11

TSR, minimum percent	75

* This is a minimum requirement. The average during construction shall be significantly higher than this number to ensure compliance with the specifications.
** Calculate VMA in accordance with AI MS-2, based on ASTM D 2726 bulk specific gravity for the aggregate.

2.3.2 Adjustments to Field JMF

The Laboratory JMF for each mixture shall be in effect until a new formula is approved in writing by the Contracting Officer. Should a change in sources of any materials be made, a new laboratory jmf design shall be performed and a new JMF approved before the new material is used. The Contractor will be allowed to adjust the Laboratory JMF within the limits specified below to optimize mix volumetric properties with the approval of the Contracting Officer. Adjustments to the Laboratory JMF shall be applied to the field (plant) established JMF and limited to those values as shown. Adjustments shall be targeted to produce or nearly produce 4 percent voids total mix (VTM).

TABLE 4. Field (Plant) Established JMF Tolerances

Sieves	Adjustments (plus or minus), percent
No. 4	3
No. 8	3
No. 200	1
Binder Content	0.40

If adjustments are needed that exceed these limits, a new mix design shall be developed. Tolerances given above may permit the aggregate grading to be outside the limits shown in Table 2; while not desirable, this is acceptable.

PART 3 EXECUTION

3.1 PREPARATION OF ASPHALT BINDER MATERIAL

The asphalt cement material shall be heated avoiding local overheating and providing a continuous supply of the asphalt material to the mixer at a uniform temperature. The temperature of unmodified asphalts shall be no more than 325°F when added to the aggregates. Modified asphalts shall be no more than 350°F when added to the aggregates.

3.2 PREPARATION OF MINERAL AGGREGATE

The aggregate for the mixture shall be heated and dried prior to mixing. No damage shall occur to the aggregates due to the maximum temperature and rate of heating used. The temperature of the aggregate and mineral filler shall not exceed 350°F when the asphalt cement is added. The temperature shall not be lower than is required to obtain complete coating and uniform distribution on the aggregate particles and to provide a mixture of satisfactory workability.

3.3 PREPARATION OF HOT-MIX ASPHALT MIXTURE

The aggregates and the asphalt cement shall be weighed or metered and introduced into the mixer in the amount specified by the JMF. The combined materials shall be mixed until the aggregate obtains a uniform coating of asphalt binder and is thoroughly distributed throughout the mixture. Wet mixing time shall be the shortest time that will produce a satisfactory mixture, but no less than 25 seconds for batch plants. The wet mixing time for all plants shall be established by the Contractor, based on the procedure for determining the percentage of coated particles described in ASTM D 2489, for each individual plant and for each type of aggregate used. The wet mixing time will be set to at least achieve 95 percent of coated particles. The moisture content of all hot-mix asphalt upon discharge from the plant shall not exceed 0.5 percent by total weight of mixture as measured by ASTM D 1461.

3.4 PREPARATION OF THE UNDERLYING SURFACE

Immediately before placing the hot mix asphalt, the underlying course shall be cleaned of dust and debris. A prime coat and tack coat shall be applied in accordance with the contract specifications.

3.5 TESTING LABORATORY

The laboratory used to develop the JMF shall meet the requirements of ASTM D 3666. A certification signed by the manager of the laboratory stating that it meets these requirements or clearly listing all deficiencies shall be submitted to the Contracting Officer prior to the start of construction. The certification shall contain as a minimum:

a. Qualifications of personnel; laboratory manager, supervising technician, and testing technicians.

b. A listing of equipment to be used in developing the job mix.

c. A copy of the laboratory's quality control system.

d. Evidence of participation in the AASHTO Materials Reference Laboratory (AMRL) program.

3.6 TRANSPORTING AND PLACING

3.6.1 Transporting

The hot-mix asphalt shall be transported from the mixing plant to the site in clean, tight vehicles. Deliveries shall be scheduled so that placing and compacting of mixture is uniform with minimum stopping and starting of the paver. Adequate artificial lighting shall be provided for night placements. Hauling over freshly placed material will not be permitted until the material has been compacted as specified, and allowed to cool to 140°F. To deliver mix to the paver, the Contractor shall use a material transfer vehicle which shall be operated to produce continuous forward motion of the paver.

3.6.2 Placing

The mix shall be placed and compacted at a temperature suitable for obtaining density, surface smoothness, and other specified requirements. Upon arrival, the mixture shall be placed to the full width by an asphalt paver; it shall be struck off in a uniform layer of such depth that, when the work is completed, it shall have the required thickness and conform to the grade and contour indicated. The speed of the paver shall be regulated to eliminate pulling and tearing of the asphalt mat. Unless otherwise permitted, placement of the mixture shall begin along the centerline of a crowned section or on the high side of areas with a one-way slope. The mixture shall be placed in consecutive adjacent strips having a minimum width of 10 feet. The longitudinal joint in one course shall offset the longitudinal joint in the course immediately below by at least 1 foot; however, the joint in the surface course shall be at the centerline of the pavement. Transverse joints in one course shall be offset by at least 10 feet from transverse joints in the previous course. Transverse joints in adjacent lanes shall be offset a minimum of 10 feet. On isolated areas where irregularities or unavoidable obstacles make the use of mechanical spreading and finishing equipment impractical, the mixture may be spread and luted by hand tools.

3.7 COMPACTION OF MIXTURE

After placing, the mixture shall be thoroughly and uniformly compacted by rolling. The surface shall be compacted as soon as possible without causing displacement, cracking or shoving. The sequence of rolling operations and the type of rollers used shall be at the discretion of the Contractor. The speed of the roller shall, at all times, be sufficiently

slow to avoid displacement of the hot mixture and be effective in compaction. Any displacement occurring as a result of reversing the direction of the roller, or from any other cause, shall be corrected at once. Sufficient rollers shall be furnished to handle the output of the plant. Rolling shall continue until the surface is of uniform texture, true to grade and cross section, and the required field density is obtained. To prevent adhesion of the mixture to the roller, the wheels shall be kept properly moistened but excessive water will not be permitted. In areas not accessible to the roller, the mixture shall be thoroughly compacted with hand tampers. Any mixture that becomes loose and broken, mixed with dirt, contains check-cracking, or is in any way defective shall be removed full depth, replaced with fresh hot mixture and immediately compacted to conform to the surrounding area. This work shall be done at the Contractor's expense. Skin patching will not be allowed.

3.8 JOINTS

The formation of joints shall be made ensuring a continuous bond between the courses and to obtain the required density. All joints shall have the same texture as other sections of the course and meet the requirements for smoothness and grade.

3.8.1 Transverse Joints

The roller shall not pass over the unprotected end of the freshly laid mixture, except when necessary to form a transverse joint. When necessary to form a transverse joint, it shall be made by means of placing a bulkhead or by tapering the course. The tapered edge shall be cut back to its full depth and width on a straight line to expose a vertical face prior to placing material at the joint. The cutback material shall be removed from the project. In both methods, all contact surfaces shall be given a light tack coat of asphalt material before placing any fresh mixture against the joint.

3.8.2 Longitudinal Joints

Longitudinal joints which are irregular, damaged, uncompacted, cold (less than 175°F at the time of placing adjacent lanes), or otherwise defective, shall be cut back a minimum of 2 inches from the edge with a cutting wheel to expose a clean, sound vertical surface for the full depth of the course. All cutback material shall be removed from the project. All contact surfaces shall be given a light tack coat of asphalt material prior to placing any fresh mixture against the joint. The Contractor will be allowed to use an alternate method if it can be demonstrated that density, smoothness, and texture can be met.

3.9 CONTRACTOR QUALITY CONTROL

3.9.1 General Quality Control Requirements

The Contractor shall develop an approved Quality Control Plan. Hot-mix asphalt for payment shall not be produced until the quality control plan has been approved. The plan shall address all elements which affect the quality of the pavement including, but not limited to:

a. Mix Design
b. Aggregate Grading
c. Quality of Materials
d. Stockpile Management
e. Proportioning
f. Mixing and Transportation
g. Mixture Volumetrics
h. Moisture Content of Mixtures
i. Placing and Finishing
j. Joints
k. Compaction
l. Surface Smoothness

3.9.2 Quality Control Testing

The Contractor shall perform all quality control tests applicable to these specifications and as set forth in the Quality Control Program. The testing program shall include, but shall not be limited to, tests for the control of asphalt content, aggregate gradation, temperatures, aggregate moisture, moisture in the asphalt mixture, laboratory air voids, stability, flow, in-place density, grade and smoothness. A Quality Control Testing Plan shall be developed as part of the Quality Control Program.

3.9.2.1 Asphalt Content

A minimum of one test to determine asphalt content will be performed per lot (a lot is defined in paragraph MATERIAL ACCEPTANCE AND PERCENT PAYMENT) by one of the following methods: the extraction method in accordance with ASTM D 2172, Method A or B, the ignition method in accordance with the AASHTO TP53or ASTM D 6307, or the nuclear method in accordance with ASTM D 4125, provided the nuclear gauge is calibrated for the specific mix being used. For the extraction method, the weight of ash, as described in ASTM D 2172, shall be determined as part of the first extraction test performed at the beginning of plant production; and as part of every tenth extraction test performed thereafter, for the duration of plant production. The last weight of ash value obtained shall be used in the calculation of the asphalt content for the mixture.

3.9.2.2 Gradation

Aggregate gradations shall be determined a minimum of once per lot from mechanical analysis of recovered aggregate in accordance with ASTM D 5444. When asphalt content is determined by the nuclear method, aggregate gradation shall be determined from hot bin samples on batch plants, or from the cold feed on drum mix plants. For batch plants, aggregates shall be tested in accordance with ASTM C 136 using actual batch weights to determine the combined aggregate gradation of the mixture.

3.9.2.3 Temperatures

Temperatures shall be checked at least once per lot, at necessary locations, to determine the temperature at the dryer, the asphalt cement in the storage tank, the asphalt mixture at the plant, and the asphalt mixture

at the job site.

3.9.2.4 Aggregate Moisture

The moisture content of aggregate used for production shall be determined a minimum of once per lot in accordance with ASTM C 566.

3.9.2.5 Moisture Content of Mixture

The moisture content of the mixture shall be determined at least once per lot in accordance with ASTM D 1461 or an approved alternate procedure.

3.9.2.6 Laboratory Air Voids, Marshall Stability and Flow

Mixture samples shall be taken at least twice per lot and compacted into specimens, using 75 blows per side with the Marshall hammer as described in ASTM D 1559. After compaction, the laboratory air voids of each specimen shall be determined, as well as the Marshall stability and flow.

3.9.2.7 In-Place Density

The Contractor shall conduct any necessary testing to ensure the specified density is achieved. A nuclear gauge may be used to monitor pavement density in accordance with ASTM D 2950.

3.9.2.8 Grade and Smoothness

The Contractor shall conduct the necessary checks to ensure the grade and smoothness requirements are met in accordance with paragraph MATERIAL ACCEPTANCE AND PERCENT PAYMENT.

3.9.2.9 Additional Testing

Any additional testing, which the Contractor deems necessary to control the process, may be performed at the Contractor's option.

3.9.2.10 QC Monitoring

The Contractor shall submit all QC test results to the Contracting Officer on a daily basis as the tests are performed. The Contracting Officer reserves the right to monitor any of the Contractor's quality control testing and to perform duplicate testing as a check to the Contractor's quality control testing.

3.9.3 Sampling

When directed by the Contracting Officer, the Contractor shall sample and test any material which appears inconsistent with similar material being produced, unless such material is voluntarily removed and replaced or deficiencies corrected by the Contractor. All sampling shall be in accordance with standard procedures specified.

3.10 MATERIAL ACCEPTANCE AND PERCENT PAYMENT

An independent laboratory hired by the Contractor will perform testing for acceptability of work. Test results and payment calculations shall be forwarded daily to the Contracting Officer. Acceptance of the plant produced mix and in-place requirements will be on a lot to lot basis. A standard lot for all requirements will be equal to 8 hours of production. Where appropriate, adjustment in payment for individual lots of hot-mix asphalt will be made based on in-place density, laboratory air voids, grade and smoothness in accordance with the following paragraphs. Grade and surface smoothness determinations will be made on the lot as a whole. Exceptions or adjustments to this will be made in situations where the mix within one lot is placed as part of both the intermediate and surface courses, thus grade and smoothness measurements for the entire lot cannot be made. In order to evaluate laboratory air voids and in-place (field) density, each lot will be divided into four equal sublots.

3.10.1 Percent Payment

When a lot of material fails to meet the specification requirements for 100 percent pay as outlined in the following paragraphs, that lot shall be removed and replaced, or accepted at a reduced price which will be computed by multiplying the unit price by the lot's pay factor. The lot pay factor is determined by taking the lowest computed pay factor based on either laboratory air voids, in-place density, grade or smoothness (each discussed below). At the end of the project, an average of all lot pay factors will be calculated. If this average lot pay factor exceeds 95.0 percent, then the percent payment for the entire project will be 100 percent of the unit bid price. If the average lot pay factor is less than 95.0 percent, then each lot will be paid for at the unit price multiplied by the lot's pay factor. For any lots that are less than 2000 tons, a weighted lot pay factor will be used to calculate the average lot pay factor.

3.10.2 Sublot Sampling

One random mixture sample for determining laboratory air voids, theoretical maximum density, and for any additional testing the Contracting Officer desires, will be taken from a loaded truck delivering mixture to each sublot, or other appropriate location for each sublot. All samples will be selected randomly, using commonly recognized methods of assuring randomness conforming to ASTM D 3665 and employing tables of random numbers or computer programs. Laboratory air voids will be determined from three laboratory compacted specimens of each sublot sample in accordance with ASTM D 1559. The specimens will be compacted within 2 hours of the time the mixture was loaded into trucks at the asphalt plant. Samples will not be reheated prior to compaction and insulated containers will be used as necessary to maintain the temperature.

3.10.3 Additional Sampling and Testing

The Contracting Officer reserves the right to direct additional samples and tests for any area that appears to deviate from the specification requirements. The Government will pay for the cost of any additional testing. Testing in these areas will be in addition to the lot testing, and the requirements for these areas will be the same as those for a lot.

3.10.4 Laboratory Air Voids

Laboratory air voids will be calculated by determining the Marshall density of each lab compacted specimen using ASTM D 2726 and determining the theoretical maximum density of every other sublot sample using ASTM D 2041. Laboratory air void calculations for each sublot will use the latest theoretical maximum density values obtained, either for that sublot or the previous sublot. The mean absolute deviation of the four laboratory air void contents (one from each sublot) from the JMF air void content will be evaluated and a pay factor determined from Table 7. All laboratory air void tests will be completed and reported within 24 hours after completion of construction of each lot.

3.10.5 Mean Absolute Deviation

An example of the computation of mean absolute deviation for laboratory air voids is as follows: Assume that the laboratory air voids are determined from 4 random samples of a lot (where 3 specimens were compacted from each sample). The average laboratory air voids for each sublot sample are determined to be 3.5, 3.0, 4.0, and 3.7. Assume that the target air voids from the JMF is 4.0. The mean absolute deviation is then:

Mean Absolute Deviation = (|3.5 - 4.0| + |3.0 - 4.0| + |4.0 - 4.0| + |3.7 - 4.0|/4

= (0.5 + 1.0 + 0.0 + 0.3)/4 = (1.8)/4 = 0.45

The mean absolute deviation for laboratory air voids is determined to be 0.45. It can be seen from Table 7 that the lot's pay factor based on laboratory air voids, is 100 percent.

Table 7. Pay Factor Based on Laboratory Air Voids

Mean Absolute Deviation of Lab Air Voids from JMF	Pay Factor, %
0.60 or less	100
0.61 - 0.80	98
0.81 - 1.00	95
1.01 - 1.20	90
Above 1.20	reject (0)

3.10.6 In-place Density

3.10.6.1 General Density Requirements

For determining in-place density, one random core will be taken by the Government from the mat of each lot, and one random core will be taken from the joint of each lot. Each random core will be full thickness of the layer being placed. When the random core is less than 1 inch thick, it will not be included in the analysis. In this case, another random core will be taken. After air-drying to a constant weight, cores obtained from the mat and from the joints will be used for in-place density determination.

3.10.6.2 Mat and Joint Densities

The average in-place mat and joint densities are expressed as a percentage of the average Marshall density for the lot. The Marshall density for each lot will be determined as the average Marshall density of the four random samples (3 specimens compacted per sample). The average in-place mat density and joint density for a lot are determined and compared with Table 8 to calculate a single pay factor per lot based on in-place density, as described below. First, a pay factor for both mat density and joint density are determined from Table 8. The area associated with the joint is then determined and will be considered to be 10 feet wide times the length of completed longitudinal construction joint in the lot. This area will not exceed the total lot size. The length of joint to be considered will be that length where a new lane has been placed against an adjacent lane of hot-mix asphalt pavement, either an adjacent freshly paved lane or one paved at any time previously. The area associated with the joint is expressed as a percentage of the total lot area. A weighted pay factor for the joint is determined based on this percentage (see example below). The pay factor for mat density and the weighted pay factor for joint density is compared and the lowest selected. This selected pay factor is the pay

factor based on density for the lot. When the Marshall density on both sides of a longitudinal joint is different, the average of these two densities will be used as the Marshall density needed to calculate the percent joint density. All density results for a lot will be completed and reported within 24 hours after the construction of that lot.

Table 8. Pay Factor Based on In-place Density

Average Mat Density (4 Cores)	Pay Factor, %	Average Joint Density (4 Cores)
97.9 or 100	100.0	96.4 or above
97.8 or 100.1	99.9	96.3
97.7	99.8	96.2
97.6 or100.2	99.6	96.1
97.5	99.4	96.0
97.4 or 100.3	99.1	95.9
97.3	98.7	95.8
97.2 or 100.4	98.3	95.7
97.1	97.8	95.6
97.0 or 100.5	97.3	95.5
96.9	96.3	95.4
96.8 or 100.6	94.1	95.3
96.7	92.2	95.2
96.6 or 100.7	90.3	95.1
96.5	87.9	95.0
96.4 or 100.8	85.7	94.9
96.3	83.3	94.8
96.2 or 100.9	80.6	94.7
96.1	78.0	94.6
96.0 or 101.0	75.0	94.5
below 96.0or above 101.0	0.0 (reject)	below 94.5

3.10.6.3 Pay Factor Based on In-place Density

An example of the computation of a pay factor (in I-P units only) based on in-place density, is as follows: Assume the following test results for field density made on the lot: (1) Average mat density = 97.2 percent (of lab density). (2) Average joint density = 95.5 percent (of lab density). (3) Total area of lot = 30,000 square feet. (4) Length of completed longitudinal construction joint = 2000 feet.

a. Step 1: Determine pay factor based on mat density and on joint density, using Table 8:

Mat density of 97.2 percent = 98.3 pay factor.

Joint density of 95.5 percent = 97.3 pay factor.

b. Step 2: Determine ratio of joint area (length of longitudinal joint x 10 ft) to mat area (total paved area in the lot): Multiply the length of completed longitudinal construction joint by the specified 10 ft. width and divide by the mat area (total paved area in the lot).

(2000 ft. x 10 ft.)/30000 sq.ft. = 0.6667 ratio of joint area to mat area (ratio).

c. Step 3: Weighted pay factor (wpf) for joint is determined as indicated below:

wpf = joint pay factor + (100 - joint pay factor) (1 - ratio)
wpf = 97.3 + (100-97.3) (1-.6667) = 98.2%

d. Step 4: Compare weighted pay factor for joint density to pay factor for mat density and select the smaller:

Pay factor for mat density: 98.3%. Weighted pay factor for joint density: 98.2%

Select the smaller of the two values as pay factor based on density: 98.2%

3.10.7 Grade

The final wearing surface of pavement shall conform to the elevations and cross sections shown and shall vary not more than 0.05 foot from the plan grade established and approved at site of work. Finished surfaces at juncture with other pavements shall coincide with finished surfaces of abutting pavements. Deviation from the plan elevation will not be permitted in areas of pavements where closer conformance with planned elevation is required for the proper functioning of drainage and other appurtenant structures involved. The final wearing surface of the pavement will be tested for conformance with specified plan grade requirements. The grade will be determined by running lines of levels at intervals of 25 feet, or less, longitudinally and transversely, to determine the elevation of the completed pavement surface. Within 5 working days, after the completion of a particular lot incorporating the final wearing surface, the

Contracting Officer will inform the Contractor in writing, of the results of the grade-conformance tests. When more than 5 percent of all measurements made within a lot are outside the 0.05 foot tolerance, the pay factor based on grade for that lot will be 95 percent. In areas where the grade exceeds the tolerance by more than 50 percent, the Contractor shall remove the surface lift full depth; the Contractor shall then replace the lift with hot-mix asphalt to meet specification requirements, at no additional cost to the Government. Diamond grinding may be used to remove high spots to meet grade requirements. Skin patching for correcting low areas or planning or milling for correcting high areas will not be permitted.

3.10.8 Surface Smoothness

The Contractor shall use one of the following methods to test and evaluate surface smoothness of the pavement. All testing shall be performed in the presence of the Contracting Officer. Detailed notes of the results of the testing shall be kept and a copy furnished to the Government immediately after each day's testing. The profilograph method shall be used for all longitudinal and transverse testing, except where the runs would be less than 200 feet in length and the ends where the straightedge shall be used. Where drawings show required deviations from a plane surface (crowns, drainage inlets, etc.), the surface shall be finished to meet the approval of the Contracting Officer.

3.10.8.1 Smoothness Requirements

a. Straightedge Testing: The finished surfaces of the pavements shall have no abrupt change of 1/4 inch or more, and all pavements shall be within the tolerances specified in Table 9 when checked with an approved 12 foot straightedge.

Table 9. Straightedge Surface Smoothness - Pavements

Pavement Category	Direction of Testing	Tolerances (inch)
All Paved Surfaces	Longitudinal	1/4
	Transverse	1/4

3.10.8.2 Testing Method

After the final rolling, but not later than 24 hours after placement, the surface of the pavement in each entire lot shall be tested by the Contractor in such a manner as to reveal all surface irregularities exceeding the tolerances specified above. Separate testing of individual sublots is not required. If any pavement areas are ground, these areas shall be retested immediately after grinding. The entire area of the pavement shall be tested in both a longitudinal and a transverse direction on parallel lines. The transverse lines shall be 25 feet or less apart, as directed. The longitudinal lines shall be at the centerline of each paving lane for lines less than 20 feet and at the third points for lanes 20 feet

or greater. Other areas having obvious deviations shall also be tested. Longitudinal testing lines shall be continuous across all joints.

a. Straightedge Testing. The straightedge shall be held in contact with the surface and moved ahead one-half the length of the straightedge for each successive measurement. The amount of surface irregularity shall be determined by placing the freestanding (unleveled) straightedge on the pavement surface and allowing it to rest upon the two highest spots covered by its length, and measuring the maximum gap between the straightedge and the pavement surface in the area between these two high points.

3.10.8.3 Payment Adjustment for Smoothness

a. Straightedge Testing. Location and deviation from straightedge for all measurements shall be recorded. When between 5.0 and 10.0 percent of all measurements made within a lot exceed the tolerance specified in paragraph Smoothness Requirements above, after any reduction of high spots or removal and replacement, the computed pay factor for that lot based on surface smoothness, will be 95 percent. When more than 10.0 percent of all measurements exceed the tolerance, the computed pay factor will be 90 percent. When between 15.0 and 20.0 percent of all measurements exceed the tolerance, the computed pay factor will be 75 percent. When 20.0 percent or more of the measurements exceed the tolerance, the lot shall be removed and replaced at no additional cost to the Government. Regardless of the above, any small individual area with surface deviation which exceeds the tolerance given above by more than 50 percent, shall be corrected by diamond grinding to meet the specification requirements above or shall be removed and replaced at no additional cost to the Government.

-- End of Section --

SECTION TABLE OF CONTENTS

DIVISION 02 - SITE WORK

SECTION 02761N

PAVEMENT MARKINGS

09/02

PART 1 GENERAL

1.1 REFERENCES
1.2 SUBMITTALS
1.3 Paints for roads and streets
1.3.1 DELIVERY AND STORAGE
1.3.2 WEATHER LIMITATIONS
1.3.3 EQUIPMENT
1.3.4 Paint Applicator
1.3.5 Portable Application Equipment

PART 2 PRODUCTS

2.1 MATERIALS
2.1.1 Paints for Roads and Streets

PART 3 EXECUTION

3.1 SURFACE PREPARATION
3.2 APPLICATION
3.2.1 Rate of Application
3.2.1.1 Non-reflective Markings / Paint
3.2.2 Painting
3.3 INSPECTION
3.3.1 Inspection
3.4 SURFACE PREPARATION AND APPLICATION
3.4.1 Surface Preparations and Application Procedures
3.5 TRAFFIC CONTROL AND PROTECTION

-- End of Section Table of Contents --

SECTION 02761N

PAVEMENT MARKINGS
09/02

PART 1 GENERAL

1.1 REFERENCES

The publications listed below form a part of this specification to the extent referenced. The publications are referred to in the text by the basic designation only.

AMERICAN SOCIETY FOR TESTING AND MATERIALS (ASTM)

ASTM D 711	(1998) No-Pick-Up Time of Traffic Paint
ASTM D 792	(1998) Density and Specific Gravity (Relative Density) of Plastics by Displacement
ASTM D 823	(1995) Producing Films of Uniform Thickness of Paints, Varnishes, and Related Products on Test Panels.
ASTM D 3924	(1996) Conditioning and Testing Paint, Varnish, Lacquers, and Related Materials

U.S. GENERAL SERVICES ADMINISTRATION (GSA)

FS A-A-2886	(1997; Rev A)Paint, Traffic, Solvent Based
FED-STD-595	(1989; 1994; Rev. B) Colors used in Government Procurement

1.2 SUBMITTALS

Submit the following in accordance with Section 01330, "Submittal Procedures."

SD-03 Product Data

Paints for roads and streets

1.3 Paints for roads and streets

1.3.1 DELIVERY AND STORAGE
Deliver paints and paint materials in original sealed containers that plainly show the designated name, specification number, batch number, color, date of manufacture, manufacturer's directions, and name of manufacturer. Provide storage facilities at the job site for maintaining

materials at temperatures recommended by the manufacturer.

1.3.2 WEATHER LIMITATIONS

Apply paint to clean, dry surfaces, and unless otherwise approved, only when air and pavement temperatures are above 40 degrees F and less than 95 degrees F for oil-based materials, above 50 degrees F and less than 110 degrees F for water-based materials. Maintain paint temperature within these same limits.

1.3.3 EQUIPMENT

Machines, tools, and equipment used in the performance of the work shall be approved by the Contracting Officer and maintained in satisfactory operating condition.

1.3.4 Paint Applicator

Provide hand-operated push-type applicator machine of a type commonly used for application of paint to pavement surfaces. Paint applicator machine shall be acceptable for marking small street and parking areas. Applicator machine shall be equipped with the necessary paint tanks and spraying nozzles, and shall be capable of applying paint uniformly at coverage specified.

1.3.5 Portable Application Equipment

The portable applicator shall be defined as hand-operated equipment, specifically designed for placing special markings such as crosswalks, stopbars, legends, arrows, and short lengths of lane, edge and centerlines.

The portable applicator shall be capable of applying thermoplastic pavement markings by the extrusion method. It is intended that the portable applicator will be loaded with hot thermoplastic composition from the melting kettles on the mobile applicator. Equip the portable applicator with all the necessary components, including a materials storage reservoir, bead dispenser, extrusion shoe, and heating accessories, so as to be capable of holding the molten thermoplastic at a temperature of 375 to 425 degrees F, of extruding a line of 3 to 12 inches in width, and in thickness of not less than 0.125 inch nor more than 0.190 inch and of generally uniform cross section.

PART 2 PRODUCTS

2.1 MATERIALS

Provide materials conforming to the requirements specified herein.

2.1.1 Paints for Roads and Streets

High Build Acrylic Coating (HBAC), color as indicated on the drawings.

PART 3 EXECUTION

3.1 SURFACE PREPARATION

Allow new pavement surfaces to cure for a period of not less than 10 days before application of marking materials. Thoroughly clean surfaces to be marked before application of the paint. Remove dust, dirt, and other granular surface deposits by sweeping, blowing with compressed air, rinsing with water, or a combination of these methods as required. Do not commence painting in any area until pavement surfaces are dry and clean.

3.2 APPLICATION

3.2.1 Rate of Application

3.2.1.1 Non-reflective Markings / Paint

Apply paint evenly to the pavement surface to be coated at a rate of 105 plus or minus 5 square feet per gallon.

3.2.2 Painting

Apply paint pneumatically with approved equipment at rate of coverage specified herein. Provide guidelines and templates as necessary to control paint application. Take special precautions in marking numbers, letters, and symbols. Manually paint numbers, letters, and symbols. Sharply outline all edges of markings. The maximum drying time requirements of the paint specifications will be strictly enforced, to prevent undue softening of bitumen, and pickup, displacement, or discoloration by tires of traffic. Discontinue painting operations if there is a deficiency in drying of the markings until cause of the slow drying is determined and corrected.

3.3 INSPECTION

3.3.1 Inspection

Examine material at the job site to determine that it is the material referenced in the specifications.

3.4 SURFACE PREPARATION AND APPLICATION

3.4.1 Surface Preparations and Application Procedures

Surface preparations and application procedures will be examined by the Contracting Officer to determine conformance with the requirements specified. Approve each separate operation prior to initiation of subsequent operations.

3.5 TRAFFIC CONTROL AND PROTECTION

Place warning signs near the beginning of the work site and well ahead of the work site for alerting approaching traffic from both directions. Place small markers along newly painted lines to control traffic and prevent

damage to newly painted surfaces. Mark painting equipment with large warning signs indicating slow-moving painting equipment in operation. Do not use foil-backed material for temporary pavement marking because of its potential to conduct electricity during accidents involving downed power lines.

TABLE I
REQUIREMENTS FOR HIGH BUILD ACRYLIC COATINGS (HBAC)

Test	Minimum Requirement (and Maximum where indicated)
Resin System (ASTM D 2621)	Waterborne 100% Acrylic
Percent Volume Solids (ASTM D 2697)	58%
Volatile Organic Compound, max. (ASTM D 3960)	1.25 lbs/gal
White (FED-STD-595)	37925
Yellow (FED-STD-595)	33538
Shore D Hardness (ASTM D 2240)	45
1/8 inch Mandrel Bend @ 5 mils Dry Film Thickness (DFT, one-week cure (ASTM D 522, Method B)	No visual defects at bend (Conditions @ ASTM D 3924)
Adhesion to Concrete and Asphaltic Pavements (ASTM D 4541)	140 psi or 100% cohesive failure in pavement
Accelerated Weathering, Yellow, 2500 Hours UV Exposure (ASTM G 53: see note 1)	Max. color loss to 33655 (FED-STD-595)
Water Absorption @ 168 Hours Immersion Tap Water (ASTM D 471)	9.0% max. weight increase (conditions @ ASTM D 3924)
Application @ 65 mils Wet,One Coat, One-week Cure, (see note 2)	No visual cracking or curling (conditions @ ASTM D 3924)
No Pick-Up @ 25 mils (ASTM D 711)	Wet 10 minutes max.
Lead (ASTM D 3335)	0.06% max.
Cadmium (ASTM D 3335)	0.06% max.
Chromium (ASTM D 3718)	0.00%

TABLE II
PREAPPROVED HBACs

Manufacturer	Products
TMT-Pathway 1021 N. Mission Road Los Angeles, CA 90033 (800) 338-7680	Legend Build, #2712A9, White Legend Build, #2713A9, Yellow
Pervo Paints 6624 Stanford Ave. Los Angeles, CA 90001 (323) 758-1147	Pervo 6050, White Pervo 6053, Yellow
Vogel Traffic Services 1920 Albany Place South PO Box 140 Orange City, IA 51041 (712) 737-4016	UC-1516, White UC-3588, Yellow

-- End of Section --

SECTION TABLE OF CONTENTS

DIVISION 02 - SITE WORK

SECTION 02770A

CONCRETE SIDEWALKS AND CURBS AND GUTTERS

03/98

PART 1 GENERAL

1.1 REFERENCES
1.2 DESCRIPTION OF WORK
1.2.1 Work Covered by This Specification Section
1.3 SUBMITTALS
1.4 Concrete
1.5 WEATHER LIMITATIONS
1.5.1 Placing During Cold Weather
1.5.2 Placing During Warm Weather
1.6 PLANT, EQUIPMENT, MACHINES, AND TOOLS
1.6.1 General Requirements
1.6.2 Slip Form Equipment

PART 2 PRODUCTS

2.1 CONCRETE
2.1.1 Air Content
2.1.2 Slump
2.1.3 Reinforcement Steel
2.2 CONCRETE CURING AND JOINT MATERIALS
2.2.1 Curing and Joint Materials
2.3 FORM WORK
2.3.1 Sidewalk Forms
2.3.2 Curb and Gutter Forms

PART 3 EXECUTION

3.1 SUBGRADE PREPARATION
3.1.1 Sidewalks, Multi-Use Path, and Cart Path Subgrade
3.1.2 Curb and Gutter Subgrade
3.1.3 Maintenance of Subgrade
3.2 FORM SETTING
3.2.1 Sidewalks, Multi-Use Paths, and Cart Paths
3.2.2 Curbs and Gutters
3.3 SIDEWALK CONCRETE PLACEMENT AND FINISHING
3.3.1 Formed Sidewalks, Multi-Use Paths, and Cart Paths
3.3.2 Concrete Finishing
3.3.3 Edge and Joint Finishing
3.3.4 Surface and Thickness Tolerances
3.4 CURB AND GUTTER CONCRETE PLACEMENT AND FINISHING

3.4.1 Formed Curb and Gutter
3.4.2 Curb and Gutter Finishing
3.4.3 Concrete Finishing
3.4.4 Joint Finishing
3.4.5 Surface and Thickness Tolerances
3.5 SIDEWALK, MULTI-USE PATH, AND CART PATH JOINTS
3.5.1 Sidewalk, Multi-Use Path, and Cart Path Contraction Joints
3.5.2 Sidewalk, Multi-Use Path, and Cart Path Expansion Joints
3.5.3 Reinforcement Steel Placement
3.6 CURB AND GUTTER JOINTS
3.6.1 Contraction Joints
3.6.2 Expansion Joints
3.7 CURING AND PROTECTION
3.7.1 General Requirements
3.7.1.1 Mat Method
3.7.1.2 Impervious Sheeting Method
3.7.1.3 Membrane Curing Method
3.7.2 Backfilling
3.7.3 Protection
3.8 FIELD QUALITY CONTROL
3.8.1 General Requirements
3.8.2 Concrete Testing
3.8.2.1 Strength Testing
3.8.2.2 Air Content
3.8.2.3 Slump Test
3.8.3 Thickness Evaluation
3.8.4 Surface Evaluation
3.9 SURFACE DEFICIENCIES AND CORRECTIONS
3.9.1 Thickness Deficiency
3.9.2 High Areas
3.9.3 Appearance

-- End of Section Table of Contents --

SECTION 02770A

CONCRETE SIDEWALKS AND CURBS AND GUTTERS
03/98

PART 1 GENERAL

1.1 REFERENCES

The publications listed below form a part of this specification to the extent referenced. The publications are referred to in the text by basic designation only.

AMERICAN ASSOCIATION OF STATE HIGHWAY AND TRANSPORTATION OFFICIALS (AASHTO)

AASHTO M 182	(1991) Burlap Cloth Made from Jute or Kenaf

AMERICAN SOCIETY FOR TESTING AND MATERIALS (ASTM)

ASTM A 185	(1997) Steel Welded Wire Fabric, Plain, for Concrete Reinforcement
ASTM A 615/A 615M	(2000) Deformed and Plain Billet-Steel Bars for Concrete Reinforcement
ASTM A 616/A 616M	(1996a) Rail-Steel Deformed and Plain Bars for Concrete Reinforcement
ASTM A 617/A 617M	(1996a) Axle-Steel Deformed and Plain Bars for Concrete Reinforcement
ASTM C 31/C 31M	(2000el) Making and Curing Concrete Test Specimens in the Field
ASTM C 143	(1990a) Slump of Hydraulic Cement Concrete
ASTM C 171	(1997a) Sheet Materials for Curing Concrete
ASTM C 172	(1999) Sampling Freshly Mixed Concrete
ASTM C 173	(1996) Air Content of Freshly Mixed Concrete by the Volumetric Method
ASTM C 231	(1997el) Air Content of Freshly Mixed Concrete by the Pressure Method
ASTM C 309	(1998a) Liquid Membrane-Forming Compounds for Curing Concrete

ASTM C 920	(1998) Elastomeric Joint Sealants
ASTM D 1751	(1983; R 1991) Preformed Expansion Joint Filler for Concrete Paving and Structural Construction (Nonextruding and Resilient Bituminous Types)
ASTM D 1752	(1984; R 1996el) Preformed Sponge Rubber and Cork Expansion Joint Fillers for Concrete Paving and Structural Construction
ASTM D 3405	(1996) Joint Sealants, Hot-Applied, for Concrete and Asphalt Pavements

1.2 DESCRIPTION OF WORK

1.2.1 Work Covered by This Specification Section

The work covered by this specification section includes the construction of sidewalks, curbs, curb ramps, curb-and-gutter(s), multi-use (bicycle) paths, golf cart paths, and related improvements. Requirements for materials used in the construction of these pavements is provided in SECTION 03306 - CONCRETE FOR MINOR STRUCTURES. Requirements for reinforcement materials used in this pavements is provided in SECTION 03210 - STEEL BARS AND WELDED WIRE FABRIC FOR CONCRETE REINFORCEMENT FOR CIVIL WORKS.

1.3 SUBMITTALS

Government approval is required for submittals with a "G" designation; submittals not having a "G" designation are for information only. The following shall be submitted in accordance with Section 01330 SUBMITTAL PROCEDURES:

SD-03 Product Data

Concrete

SD-06 Test Reports

Field Quality Control

Copies of all test reports within 24 hours of completion of the test.

1.4 Concrete

Copies of certified delivery tickets for all concrete used in the construction.

1.5 WEATHER LIMITATIONS

1.5.1 Placing During Cold Weather

Concrete placement shall not take place when the air temperature reaches 40 degrees F and is falling, or is already below that point. Placement may begin when the air temperature reaches 35 degrees F and is rising, or is already above 40 degrees F. Provisions shall be made to protect the concrete from freezing during the specified curing period.

1.5.2 Placing During Warm Weather

The temperature of the concrete as placed shall not exceed 85 degrees F except where an approved retarder is used. The mixing water and/or aggregates shall be cooled, if necessary, to maintain a satisfactory placing temperature. The placing temperature shall not exceed 95 degrees F at any time.

1.6 PLANT, EQUIPMENT, MACHINES, AND TOOLS

1.6.1 General Requirements

Plant, equipment, machines, and tools used in the work shall be subject to approval and shall be maintained in a satisfactory working condition at all times. The equipment shall have the capability of producing the required product, meeting grade controls, thickness control and smoothness requirements as specified. Use of the equipment shall be discontinued if it produces unsatisfactory results. The Contracting Officer shall have access at all times to the plant and equipment to ensure proper operation and compliance with specifications.

1.6.2 Slip Form Equipment

Slip form paver or curb forming machine, will be approved based on trial use on the job and shall be self-propelled, automatically controlled, crawler mounted, and capable of spreading, consolidating, and shaping the plastic concrete to the desired cross section in 1 pass.

PART 2 PRODUCTS

2.1 CONCRETE

Concrete shall conform to the applicable requirements of SECTION 03307 except as otherwise specified. Concrete shall have a minimum compressive strength of 2500 psi at 28 days for masonry wall footings and 3,000 psi at 28 days for all other concrete work. Maximum size of aggregate shall not be larger than one-fifth of the narrowest dimension between the forms of the members for which the concrete is to be used or larger than 3/4 of the minimum clear spacing between reinforcing bars.

2.1.1 Air Content

Mixtures shall have air content by volume of concrete of 4.5 and 6.0 percent, based on measurements made immediately after discharge from the mixer. Air entraining agents complying with AASHTO M-154 or ASTM C-260 will be premitted so long as strength requirements are met. Any admixture

shall be measured accurately by mechanical means into each batch by equipment and in a method approved by the Contracting Officer. Any admixture used shall be included in the bid price for that item.

2.1.2 Slump

The concrete slump shall be 2 inches plus or minus 1 inch where determined in accordance with ASTM C 143.

2.1.3 Reinforcement Steel

Reinforcement bars and welded wire fabric shall conform to the requirements of SECTION 03201 - STEEL BARS AND WELDED WIRE FABRIC FOR CONRETE REINFORCEMENT FOR CIVIL WORKS.

2.2 CONCRETE CURING AND JOINT MATERIALS

2.2.1 Curing and Joint Materials

Curing and joint materials shall comply with the requirements of SECTION 03307 - CONCRETE FOR MINOR STRUCTURES.

2.3 FORM WORK

Form work shall be designed and constructed to ensure that the finished concrete will conform accurately to the indicated dimensions, lines, and elevations, and within the tolerances specified. Forms shall be of wood or steel, straight, of sufficient strength to resist springing during depositing and consolidating concrete. Wood forms shall be surfaced plank, 2 inches nominal thickness, straight and free from warp, twist, loose knots, splits or other defects. Wood forms shall have a nominal length of 10 feet. Radius bends may be formed with 3/4 inch boards, laminated to the required thickness. Steel forms shall be channel-formed sections with a flat top surface and with welded braces at each end and at not less than two intermediate points. Ends of steel forms shall be interlocking and self-aligning. Steel forms shall include flexible forms for radius forming, corner forms, form spreaders, and fillers. Steel forms shall have a nominal length of 10 feet with a minimum of 3 welded stake pockets per form. Stake pins shall be solid steel rods with chamfered heads and pointed tips designed for use with steel forms.

2.3.1 Sidewalk Forms

Sidewalk forms shall be of a height equal to the full depth of the finished sidewalk.

2.3.2 Curb and Gutter Forms

Curb and gutter outside forms shall have a height equal to the full depth of the curb or gutter. The inside form of curb shall have batter as indicated and shall be securely fastened to and supported by the outside form. Rigid forms shall be provided for curb returns, except that benders or thin plank forms may be used for curb or curb returns with a radius of 10 feet or more, where grade changes occur in the return, or where the

central angle is such that a rigid form with a central angle of 90 degrees cannot be used. Back forms for curb returns may be made of 1-1/2 inch benders, for the full height of the curb, cleated together. In lieu of inside forms for curbs, a curb "mule" may be used for forming and finishing this surface, provided the results are approved.

PART 3 EXECUTION

3.1 SUBGRADE PREPARATION

The subgrade shall be constructed to the specified grade and cross section prior to concrete placement. Subgrade shall be graded and compacted to not less than 90% maximum laboratory density.

Each subgrade upon which concrete is placed shall be firm and free from water. Ground water shall be kept several inches below subgrade until the concrete has set. When the subgrade is in dry earth, it shall be moistened with water from a spray nozzle immediately before concrete is placed.

When the design details for the project provide for the construction of filter or drain material consisting of gravel and sand, which material becomes subgrade for concrete, the placing of steel reinforcement and concrete shall follow the placing of the filter or drain material as closely as practical. The filter or drain material shall be kept dewatered to the extent necessary to prevent any portion of the concrete meterials being carried away before the concrete has attained its final set. No payment will be made for the work required to keep such materials dewatered, other than such costs as may be included in the prices bid for various items of work.

When conrete is to rest on rock, the rock shall be fully unconvered. The surface of the rock shall be removed to a depth sufficent to expose sound rock. Bedrock shall be roughtly leveled off or cut to approximate horizontal and vertical steps.

3.1.1 Sidewalks, Multi-Use Path, and Cart Path Subgrade

The subgrade shall be tested for grade and cross section with a template extending the full width of the sidewalk and supported between side forms.

3.1.2 Curb and Gutter Subgrade

The subgrade shall be tested for grade and cross section by means of a template extending the full width of the curb and gutter. The subgrade shall be of materials equal in bearing quality to the subgrade under the adjacent pavement.

3.1.3 Maintenance of Subgrade

The subgrade shall be maintained in a smooth, compacted condition in conformity with the required section and established grade until the concrete is placed. The subgrade shall be in a moist condition when concrete is placed.

3.2 FORM SETTING

Forms shall be set to the indicated alignment, grade and dimensions. Forms shall be held rigidly in place by a minimum of 3 stakes per form placed at intervals not to exceed 4 feet. Corners, deep sections, and radius bends shall have additional stakes and braces, as required. Clamps, spreaders, and braces shall be used where required to ensure rigidity in the forms. Forms shall be removed without injuring the concrete. Bars or heavy tools shall not be used against the concrete in removing the forms. Any concrete found defective after form removal shall be promptly and satisfactorily repaired. Forms shall be cleaned and coated with form oil each time before concrete is placed. Wood forms may, instead, be thoroughly wetted with water before concrete is placed.

3.2.1 Sidewalks, Multi-Use Paths, and Cart Paths

Forms for sidewalks and paths shall be set with the upper edge true to line and grade with an allowable tolerance of 1/8 inch in any 10 foot long section. After forms are set, grade and alignment shall be checked with a 10 foot straightedge. Forms shall have a transverse slope as indicated with the low side adjacent to the roadway. Side forms shall not be removed for 12 hours after finishing has been completed.

3.2.2 Curbs and Gutters

The forms of the front of the curb shall be removed not less than 2 hours nor more than 6 hours after the concrete has been placed. Forms back of curb shall remain in place until the face and top of the curb have been finished, as specified for concrete finishing. Gutter forms shall not be removed while the concrete is sufficiently plastic to slump in any direction.

3.3 SIDEWALK CONCRETE PLACEMENT AND FINISHING

3.3.1 Formed Sidewalks, Multi-Use Paths, and Cart Paths

Concrete shall be placed in the forms in one layer. When consolidated and finished, the sidewalks and paths shall be of the thickness indicated. After concrete has been placed in the forms, a strike-off guided by side forms shall be used to bring the surface to proper section to be compacted. The concrete shall be consolidated with an approved vibrator, and the surface shall be finished to grade with a strike off.

3.3.2 Concrete Finishing

After straight edging, when most of the water sheen has disappeared, and just before the concrete hardens, the surface shall be finished with a wood float or darby to a smooth and uniformly fine granular or sandy texture free of waves, irregularities, or tool marks. A scored surface shall be produced by brooming with a fiber-bristle brush in a direction transverse to that of the traffic, followed by edging.

3.3.3 Edge and Joint Finishing

All slab edges, including those at formed joints, shall be finished with an edger having a radius of 1/8 inch. Transverse joints shall be edged before brooming, and the brooming shall eliminate the flat surface left by the surface face of the edger. Corners and edges which have crumbled and areas which lack sufficient mortar for proper finishing shall be cleaned and filled solidly with a properly proportioned mortar mixture and then finished.

3.3.4 Surface and Thickness Tolerances

Finished surfaces shall not vary more than 1/4 inch from the testing edge of a 10-foot straightedge. Permissible deficiency in section thickness will be up to 1/4 inch.

3.4 CURB AND GUTTER CONCRETE PLACEMENT AND FINISHING

3.4.1 Formed Curb and Gutter

Concrete shall be placed to the section required in a single lift. Consolidation shall be achieved by using approved mechanical vibrators. Curve shaped gutters shall be finished with a standard curb "mule".

3.4.2 Curb and Gutter Finishing

Approved slipformed curb and gutter machines may be used in lieu of hand placement.

3.4.3 Concrete Finishing

Exposed surfaces shall be floated and finished with a smooth wood float until true to grade and section and uniform in texture. Floated surfaces shall then be brushed with a fine-hair brush with longitudinal strokes. The edges of the gutter and top of the curb shall be rounded with an edging tool to a radius of 1/2 inch. Immediately after removing the front curb form, the face of the curb shall be rubbed with a wood or concrete rubbing block and water until blemishes, form marks, and tool marks have been removed. The front curb surface, while still wet, shall be brushed in the same manner as the gutter and curb top. The top surface of gutter and entrance shall be finished to grade with a wood float.

3.4.4 Joint Finishing

Curb edges at formed joints shall be finished as indicated.

3.4.5 Surface and Thickness Tolerances

Finished surfaces shall not vary more than 1/4 inch from the testing edge of a 10-foot straightedge. Permissible deficiency in section thickness will be up to 1/4 inch.

3.5 SIDEWALK, MULTI-USE PATH, AND CART PATH JOINTS

Sidewalk and path joints shall be constructed to divide the surface into rectangular areas. Transverse contraction joints shall be spaced as shown

on the drawings or at a distance equal to the sidewalk width (if not shown on the drawings) and shall be continuous across the slab. Longitudinal contraction joints shall be constructed along the centerline of all sidewalks 12 feet or more in width. Transverse expansion joints shall be installed at sidewalk returns and opposite expansion joints in adjoining curbs. Where the sidewalk is not in contact with the curb, transverse expansion joints shall be installed as indicated. Expansion joints shall be formed about structures and features which project through or into the sidewalk pavement, using joint filler of the type, thickness, and width indicated.

3.5.1 Sidewalk, Multi-Use Path, and Cart Path Contraction Joints

The contraction joints shall be formed in the fresh concrete by cutting a groove in the top portion of the slab to a depth of at least one-fourth of the sidewalk slab thickness, using a jointer to cut the groove, or by sawing a groove in the hardened concrete with a power-driven saw, unless otherwise approved. Sawed joints shall be constructed by sawing a groove in the concrete with a 1/8 inch blade to the depth indicated. An ample supply of saw blades shall be available on the job before concrete placement is started, and at least one standby sawing unit in good working order shall be available at the jobsite at all times during the sawing operations. The joints shall be kept moist until adjacent concrete is placed.

3.5.2 Sidewalk, Multi-Use Path, and Cart Path Expansion Joints

Expansion joints shall be formed with 1/2 inch joint filler strips. Joint filler shall be placed with top edge 1/4 inch below the surface and shall be held in place with steel pins or other devices to prevent warping of the filler during floating and finishing. Immediately after finishing operations are completed, joint edges shall be rounded with an edging tool having a radius of 1/8 inch, and concrete over the joint filler shall be removed.

3.5.3 Reinforcement Steel Placement

Reinforcement steel shall be accurately and securely fastened in place with suitable supports and ties before the concrete is placed.

3.6 CURB AND GUTTER JOINTS

Curb and gutter joints shall be constructed at right angles to the line of curb and gutter.

3.6.1 Contraction Joints

Contraction joints shall be constructed directly opposite contraction joints in abutting portland cement concrete pavements and spaced so that monolithic sections between curb returns will not be less than 5 feet nor greater than 15 feet in length. Contraction joints shall be constructed by means of 1/8 inch thick separators and of a section conforming to the cross section of the curb and gutter. Separators shall be removed as soon as practicable after concrete has set sufficiently to preserve the width

and shape of the joint and prior to finishing.

3.6.2 Expansion Joints

Expansion joints shall be formed by means of preformed expansion joint filler material cut and shaped to the cross section of curb and gutter. Expansion joints shall be provided in curb and gutter directly opposite expansion joints of abutting portland cement concrete pavement, and shall be of the same type and thickness as joints in the pavement. Where curb and gutter do not abut portland cement concrete pavement, expansion joints at least 1/2 inch in width shall be provided at intervals not exceeding 20 feet.

3.7 CURING AND PROTECTION

3.7.1 General Requirements

Concrete shall be protected against loss of moisture and rapid temperature changes for at least 7 days from the beginning of the curing operation. Unhardened concrete shall be protected from rain and flowing water. All equipment needed for adequate curing and protection of the concrete shall be on hand and ready for use before actual concrete placement begins. Protection shall be provided as necessary to prevent cracking of the pavement due to temperature changes during the curing period. As soon after the completion of the specified finishing operations as conditions of the concrete will permit without danger of consequent damage thereto, all exposed surfaces shall be sprinkled with water, covered with burlap (or other approved material), or sprayed with curing compound. Concrete that is water cured must be kept coninuously wet for at least 10 days after being placed.

3.7.1.1 Mat Method

The entire exposed surface shall be covered with 2 or more layers of burlap. Mats shall overlap each other at least 6 inches.The mat shall be thoroughly wetted with water prior to placing on concrete surface and shall be kept continuously in a saturated condition and in intimate contact with concrete for not less than 7 days.

3.7.1.2 Impervious Sheeting Method

The entire exposed surface shall be wetted with a fine spray of water and then covered with impervious sheeting material. Sheets shall be laid directly on the concrete surface with the light-colored side up and overlapped 12 inches when a continuous sheet is not used. The curing medium shall not be less than 18-inches wider than the concrete surface to be cured, and shall be securely weighted down by heavy wood planks, or a bank of moist earth placed along edges and laps in the sheets. Sheets shall be satisfactorily repaired or replaced if torn or otherwise damaged during curing. The curing medium shall remain on the concrete surface to be cured for not less than 7 days.

3.7.1.3 Membrane Curing Method

A uniform coating of white-pigmented membrane-curing compound shall be applied to the entire exposed surface of the concrete as soon after finishing as the free water has disappeared from the finished surface. Formed surfaces shall be coated immediately after the forms are removed and in no case longer than 1 hour after the removal of forms. Concrete shall not be allowed to dry before the application of the membrane. If any drying has occurred, the surface of the concrete shall be moistened with a fine spray of water and the curing compound applied as soon as the free water disappears. Curing compound shall be applied in two coats by hand-operated pressure sprayers at a coverage of approximately 200 square feet per gallon for the total of both coats. The second coat shall be applied in a direction approximately at right angles to the direction of application of the first coat. The compound shall form a uniform, continuous, coherent film that will not check, crack, or peel and shall be free from pinholes or other imperfections. If pinholes, abrasion, or other discontinuities exist, an additional coat shall be applied to the affected areas within 30 minutes. Concrete surfaces that are subjected to heavy rainfall within 3 hours after the curing compound has been applied shall be resprayed by the method and at the coverage specified above. Areas where the curing compound is damaged by subsequent construction operations within the curing period shall be resprayed. Necessary precautions shall be taken to insure that the concrete is properly cured at sawed joints, and that no curing compound enters the joints. The top of the joint opening and the joint groove at exposed edges shall be tightly sealed before the concrete in the region of the joint is resprayed with curing compound. The method used for sealing the joint groove shall prevent loss of moisture from the joint during the entire specified curing period. Approved standby facilities for curing concrete pavement shall be provided at a location accessible to the jobsite for use in the event of mechanical failure of the spraying equipment or other conditions that might prevent correct application of the membrane-curing compound at the proper time. Concrete surfaces to which membrane-curing compounds have been applied shall be adequately protected during the entire curing period from pedestrian and vehicular traffic, except as required for joint-sawing operations and surface tests, and from any other possible damage to the continuity of the membrane.

3.7.2 Backfilling

After curing, debris shall be removed and the area adjoining the concrete shall be backfilled, graded, and compacted to conform to the surrounding area in accordance with lines and grades indicated.

3.7.3 Protection

Completed concrete shall be protected from damage until accepted. The Contractor shall repair damaged concrete and clean concrete discolored during construction. Concrete that is damaged shall be removed and reconstructed for the entire length between regularly scheduled joints. Refinishing the damaged portion will not be acceptable. Removed damaged portions shall be disposed of as directed.

3.8 FIELD QUALITY CONTROL

3.8.1 General Requirements

The Contractor shall perform the inspection and tests described and meet the specified requirements for inspection details and frequency of testing. Based upon the results of these inspections and tests, the Contractor shall take the action and submit reports as required below, and any additional tests to insure that the requirements of these specifications are met.

3.8.2 Concrete Testing

3.8.2.1 Strength Testing

The Contractor shall provide molded concrete specimens for strength tests. Samples of concrete placed each day shall be taken not less than once a day or shift. The samples for strength tests shall be taken in accordance with ASTM C 172. Cylinders for acceptance shall be molded in conformance with ASTM C 31/C 31M by an approved testing laboratory. Each strength test result shall be the average of 2 test cylinders from the same concrete sample tested at 28 days, unless otherwise specified or approved. Concrete specified on the basis of compressive strength will be considered satisfactory if the averages of all sets of three consecutive strength test results equal or exceed the specified strength, and no individual strength test result falls below the specified strength by more than 500 psi.

3.8.2.2 Air Content

Air content shall be determined in accordance with ASTM C 173 or ASTM C 231. ASTM C 231 shall be used with concretes and mortars made with relatively dense natural aggregates. One test for air content shall be made on a randomly selected batch of concrete placed during each day or shift. Additional tests shall be made when excessive variation in concrete workability is reported by the placing foreman or the Government inspector. If results are out of tolerance, the placing foreman shall be notified and he shall take appropriate action to have the air content corrected at the plant. Additional tests for air content will be performed on each truckload of material until such time as the air content is within the tolerance specified.

3.8.2.3 Slump Test

One slump test shall be made on a randomly selected batch of concrete placed during each day or shift. Additional tests shall be performed when excessive variation in the workability of the concrete is noted or when excessive crumbling or slumping is noted along the edges of slip-formed concrete.

3.8.3 Thickness Evaluation

The anticipated thickness of the concrete shall be determined prior to placement by passing a template through the formed section or by measuring the depth of opening of the extrusion template of the curb forming machine. If a slip form paver is used for sidewalk placement, the subgrade shall be true to grade prior to concrete placement and the thickness will be

determined by measuring each edge of the completed slab.

3.8.4 Surface Evaluation

The finished surface of each category of the completed work shall be uniform in color and free of blemishes and form or tool marks.

3.9 SURFACE DEFICIENCIES AND CORRECTIONS

3.9.1 Thickness Deficiency

When measurements indicate that the completed concrete section is deficient in thickness by more than 1/4 inch the deficient section will be removed, between regularly scheduled joints, and replaced.

3.9.2 High Areas

In areas not meeting surface smoothness and plan grade requirements, high areas shall be reduced either by rubbing the freshly finished concrete with carborundum brick and water when the concrete is less than 36 hours old or by grinding the hardened concrete with an approved surface grinding machine after the concrete is 36 hours old or more. The area corrected by grinding the surface of the hardened concrete shall not exceed 5 percent of the area of any integral slab, and the depth of grinding shall not exceed 1/4 inch. Pavement areas requiring grade or surface smoothness corrections in excess of the limits specified above shall be removed and replaced.

3.9.3 Appearance

Exposed surfaces of the finished work will be inspected by the Government and any deficiencies in appearance will be identified. Areas which exhibit excessive cracking, discoloration, form marks, or tool marks or which are otherwise inconsistent with the overall appearances of the work shall be removed and replaced.

-- End of Section --

SECTION TABLE OF CONTENTS

DIVISION 02 - SITE WORK

SECTION 02811A

UNDERGROUND IRRIGATION SYSTEM

02/02

PART 1 GENERAL

1.1 REFERENCES
1.2 SUBMITTALS
1.3 Irrigation System
1.4 AS-BUILT IRRIGATION DRAWINGS
1.5 DELIVERY AND STORAGE
1.6 FIELD MEASUREMENTS

PART 2 PRODUCTS

2.1 Spare Parts
2.2 Irrigation Control System Shop Drawings
2.3 Mainline Pipe Pressure Test Reports
2.4 Product Specification Sheets
2.5 MATERIALS AND EQUIPMENT REQUIREMENTS
2.5.1 Standard Products
2.5.2 Local Sponsor Equipment Requirements
2.5.3 Nameplates
2.6 PIPING MATERIALS
2.6.1 Copper Tubing and Associated Fittings
2.6.2 Red Brass Pipe and Associated Fittings
2.6.3 Galvanized Steel Pipe and Associated Fittings
2.6.4 Polyvinyl Chloride (PVC) Pipe, Fittings and Solvent Cement
2.6.4.1 PVC Pipe
2.6.4.2 PVC Fittings
2.6.4.3 Solvent Cement
2.6.5 Dielectric Fittings
2.7 DRIP EMITTERS
2.7.1 Drip Emitters
2.7.2 Distrbution Tubing
2.8 VALVES
2.8.1 Gate Valves, Less than or equal to four (4) Inches
2.8.2 Gate Valves, Larger than 4"
2.8.3 Ball Valves
2.8.4 Quick Coupling Valves
2.8.5 Remote Control Valves, Electrical
2.8.6 Master Valve
2.8.7 In-Line Pressure Regulating Valves
2.8.8 Backflow Preventers (for irrigation and/or potable water)
2.8.8.1 Reduced Pressure Type Backflow Preventers

2.9 ACCESSORIES AND APPURTENANCES
2.9.1 Valve Boxes and Concrete Pads
2.9.1.1 Valve Boxes
2.9.1.2 Concrete Pads
2.9.2 Pressure Gauges
2.9.3 Service Clamps
2.9.4 Water Hammer Arresters
2.9.5 Emitter Zone Accessories
2.9.5.1 Strainer (in-Line Filter)
2.10 IRRIGATION CONTROL SYSTEM
2.10.1 Irrigation Control System
2.11 AUTOMATIC IRRIGATION CONTROLLER
2.12 CLUSTER CONTROL UNIT(S)
2.13 SECURITY ENCLOSURE(S)
2.14 FLOW SENSOR
2.15 COMMUNICATION CABLE
2.16 LOW VOLTAGE CONTROL WIRE
2.17 MISCELLANEOUS EQUIPMENT
2.18 ELECTRICAL WORK
2.19 CONCRETE MATERIALS

PART 3 EXECUTION

3.1 INSTALLATION
3.1.1 Trenching
3.1.2 Piping System
3.1.2.1 Cover
3.1.2.2 Clearances
3.1.3 Piping Installation
3.1.3.1 Polyvinyl Chloride (PVC) Pipe
3.1.3.2 Soldered Copper Tubing
3.1.3.3 Threaded Brass or Galvanized Steel Pipe
3.1.3.4 Insulating Joints
3.1.3.5 Grooved Mechanical Joints
3.1.4 Installation of Valves
3.1.5 Quick Coupling Valves
3.1.6 Installation of Drip Emitters
3.1.6.1 Emitters
3.1.7 Backflow Preventers
3.1.7.1 Reduced Pressure Type
3.1.8 Control Wire and Conduit
3.1.8.1 Wires
3.1.8.2 Loops
3.1.8.3 Expansion and Contraction
3.1.8.4 Splices
3.1.9 Automatic Controller and CCU
3.1.10 Thrust Blocks
3.1.11 Backfill
3.1.11.1 Minimum Cover
3.1.12 Adjustment
3.1.13 Cleaning of Piping
3.2 FIELD TESTS
3.2.1 Hydrostatic Pressure Test
3.2.2 Operation Test

3.3 FRAMED INSTRUCTIONS
3.4 FIELD TRAINING
3.5 CLEANUP

-- End of Section Table of Contents --

SECTION 02811A

UNDERGROUND IRRIGATION SYSTEM
02/02

PART 1 GENERAL

1.1 REFERENCES

The publications listed below form a part of this specification to the extent referenced. The publications are referred to in the text by the basic designation only.

AMERICAN SOCIETY FOR TESTING AND MATERIALS (ASTM)

ASTM A 183	(1998) Carbon Steel Track Bolts and Nuts
ASTM A 53/A 53M	(2001) Pipe, Steel, Black and Hot-Dipped, Zinc-Coated, Welded and Seamless
ASTM A 536	(1984; R 1999el) Ductile Iron Castings
ASTM B 32	(1996) Solder Metal
ASTM B 43	(1998) Seamless Red Brass Pipe, Standard Sizes
ASTM B 88	(1999) Seamless Copper Water Tube
ASTM D 1785	(2000) Poly(Vinyl Chloride)(PVC) Plastic Pipe, Schedules 40, 80, and 120
ASTM D 2000	(1999) Rubber Products in Automotive Applications
ASTM D 2241	(2000) Poly(Vinyl Chloride) (PVC) Pressure-Rated Pipe (SDR Series)
ASTM D 2287	(1996a) Nonrigid Vinyl Chloride Polymer and Copolymer Molding and Extrusion Compounds
ASTM D 2464	(1999) Threaded Poly(Vinyl Chloride) (PVC) Plastic Pipe Fittings, Schedule 80
ASTM D 2466	(1999) Poly(Vinyl Chloride)(PVC) Plastic Pipe Fittings, Schedule 40
ASTM D 2564	(1996a) Solvent Cements for Poly(Vinyl Chloride) (PVC) Plastic Piping Systems

ASTM D 2774	(1994) Underground Installation of Thermoplastic Pressure Piping
ASTM D 2855	(1996) Making Solvent-Cemented Joints with Poly(Vinyl Chloride) (PVC) Pipe and Fittings

AMERICAN SOCIETY OF SANITARY ENGINEERING (ASSE)

ASSE 1013	(1999) Reduced Pressure Principle Backflow Preventers

AMERICAN WATER WORKS ASSOCIATION(AWWA)

AWWA C509	(1994; Addendum 1995) Resilient-Seated Gate Valves for Water Supply Service
AWWA C606	(1997) Grooved and Shouldered Joints

ASME INTERNATIONAL (ASME)

ASME B1.2	(1983; R 1991; Errata May 1992) Gages and Gaging for Unified Inch Screw Threads
ASME B16.15	(1985; R 1994) Cast Bronze Threaded Fittings Classes 125 and 250
ASME B16.18	(1984; R 1994) Cast Copper Alloy Solder Joint Pressure Fittings
ASME B16.22	(1995; B16.22a1998) Wrought Copper and Copper Alloy Solder Joint Pressure Fittings
ASME B16.3	(1998) Malleable Iron Threaded Fittings
ASME B40.1	(1991) Gauges - Pressure Indicating Dial Type - Elastic Element

FOUNDATION FOR CROSS-CONNECTION CONTROL AND HYDRAULIC RESEARCH (FCCCHR)

FCCCHR-CCC	Manual of Cross-Connection Control

MANUFACTURERS STANDARDIZATION SOCIETY OF THE VALVE AND FITTINGS INDUSTRY (MSS)

MSS SP-80	(1997) Bronze Gate, Globe, Angle and Check Valves
MSS SP-85	(1994) Cast Iron Globe & Angle Valves, Flanged and Threaded Ends

NATIONAL ELECTRICAL MANUFACTURERS ASSOCIATION (NEMA)

NEMA ICS 2	(2000) Industrial Controls and Systems Controllers, Contactors, and Overload Relays, Rated 600 Volts
NEMA ICS 6	(1993; R 2001) Industrial Control and Systems, Enclosures

NATIONAL FIRE PROTECTION ASSOCIATION (NFPA)

NFPA 70	(2002) National Electrical Code

PLUMBING AND DRAINAGE INSTITUTE (PDI)

PDI WH 201	(1992) Water Hammer Arresters

U.S. GENERAL SERVICES ADMINISTRATION (GSA)

CID A-A-51145	(Rev C) Flux, Soldering, Non-Electronic, Paste and Liquid

1.2 SUBMITTALS

Government approval is required for submittals with a "G" designation; submittals not having a "G" designation are for information only. The following shall be submitted in accordance with Section 01330 SUBMITTAL PROCEDURES:

SD-02 Shop Drawings

Irrigation Control System Shop Drawings; G

The Contractor shall submit shop drawings for the irrigation control system to be installed. The drawing submittal shall include:

Product Specification Sheets for:
- Field Controller(s)
- Cluster Control Unit(s)
- Radio Communication Equipment
- Communication Cable
- Flow Sensor including Decoders and Transmittters
- Surge Protectors and Grounding Equipment
- Master Valves
- Other Incidental Control System Equipment

A diagram of Field Equipment that shows the location where all irrigation control system components will be installed.

A description of the control system operation including the interface of the on-site (project) system with the City of Tempe's off-site (central control) system.

SD-03 Product Data

Product Specification Sheets; G

Product Specification Sheets:

The Contractor shall submit copies of the manufacturer's specification sheets for the following irrigation system materials and equipment:

Mainline Pipe
Lateral Line Pipe
Pipe Sleeves
Mainline, Lateral Line, and Sleeve Fittings
Ball (Isolation) Valves
Gate (Isolation) Valves
Remote Control Valves
Pressure Regulating Valves
Quick Coupling Valves
Valve Access Boxes (All Required Types and Sizes)
Pull Boxes (for Control / Communication Cable)
Low Voltage Control Wire
Waterproof Wire Splices
Security Enclosures for Controllers / CCU's
Drip Emitters (Single Outlet)
Drip Emitters (Multi-Outlet)
Emitter Lateral Flush Cap Assemblies
Mainline Marking Tape

The information provided shall be marked-up to indicate the model number(s), size(s), and options that apply to the materials and equipment proposed for use on the project. No irrigation materials or equipment shall be delivered to the site until the product data sheets have been reviewed and approved by the Contracting Officer.

Field Training; G

Information describing training to be provided, training aids to be used, samples of training materials to be provided, and schedules and notification of training.

Spare Parts; G

Spare parts data for each different item of material and equipment specified, after approval of the related submittals and not later than the start of the field tests. The data shall include a complete list of parts and supplies, with and source of supply.

SD-06 Test Reports; G

Mainline Pipe Pressure Test Reports; G

The Contractor shall provide a written report summarizing the results of each mainline pipe pressure test performed.

SD-10 Operation and Maintenance Data

Irrigation System; G

Six copies of operation and maintenance manuals for the equipment furnished. One complete set prior to field testing and the remainder upon acceptance. Manuals shall be approved prior to the field training course. Operating manuals shall detail the step-by-step procedures required for system startup, operation, and shutdown. Operating manuals shall include the manufacturer's name, model number, parts list, and brief description of all equipment and their basic operating features. Maintenance manuals shall list routine maintenance procedures, possible breakdowns and repairs, and troubleshooting guides. Maintenance manuals shall include simplified wiring and control diagrams of the system as installed, and system programming schedule.

1.3 Irrigation System

Six copies of operation and maintenance manuals for the equipment furnished. One complete set prior to field testing and the remainder upon acceptance. Manuals shall be approved prior to the field training course. Operating manuals shall detail the step-by-step procedures required for system startup, operation, and shutdown. Operating manuals shall include the manufacturer's name, model number, parts list, and brief description of all equipment and their basic operating features. Maintenance manuals shall list routine maintenance procedures, possible breakdowns and repairs, and troubleshooting guides. Maintenance manuals shall include simplified wiring and control diagrams of the system as installed, and system programming schedule.

1.4 AS-BUILT IRRIGATION DRAWINGS

As-Built Drawings: The Contractor shall prepare and submit as-built drawings of the irrigation system installed. The as-built drawings shall indicate the location of all: mainlines, isolation valves, remore control valves, quick coupling valves, and sleeves for pipelines under roadways and paved surfaces. Locations shall be identified by two or more dimensions from fixed objects.

1.5 DELIVERY AND STORAGE

All equipment delivered and placed in storage shall be protected from the weather; excessive humidity and temperature variation; direct sunlight (in the case of plastic or rubber materials); and dirt, dust, or other

contaminants.

1.6 FIELD MEASUREMENTS

The Contractor shall verify all dimensions in the field and shall advise the Contracting Officer of any discrepancy before performing the work.

PART 2 PRODUCTS

2.1 Spare Parts

Spare parts data for each different item of material and equipment specified, after approval of the related submittals and not later than the start of the field tests. The data shall include a complete list of parts and supplies, with and source of supply.

2.2 Irrigation Control System Shop Drawings

The Contractor shall submit shop drawings for the irrigation control system to be installed. The drawing submittal shall include:

Product Specification Sheets for:
- Field Controller(s)
- Cluster Control Unit(s)
- Radio Communication Equipment
- Communication Cable
- Flow Sensor including Decoders and Transmittters
- Surge Protectors and Grounding Equipment
- Master Valves
- Other Incidental Control System Equipment

A diagram of Field Equipment that shows the location where all irrigation control system components will be installed.

A description of the control system operation including the interface of the on-site (project) system with the City of Tempe's off-site (central control) system.

2.3 Mainline Pipe Pressure Test Reports

The Contractor shall provide a written report summarizing the results of each mainline pipe pressure test performed.

2.4 Product Specification Sheets

The Contractor shall submit copies of the manufacturer's specification sheets for the following irrigation system materials and equipment:

- Mainline Pipe
- Lateral Line Pipe
- Pipe Sleeves

Mainline, Lateral Line, and Sleeve Fittings
Ball (Isolation) Valves
Gate (Isolation) Valves
Remote Control Valves
Pressure Regulating Valves
Quick Coupling Valves
Valve Access Boxes (All Required Types and Sizes)
Pull Boxes (for Control / Communication Cable)
Low Voltage Control Wire
Waterproof Wire Splices
Security Enclosures for Controllers / CCU's
Drip Emitters (Single Outlet)
Drip Emitters (Multi-Outlet)
Emitter Lateral Flush Cap Assemblies
Mainline Marking Tape

The information provided shall be marked-up to indicate the model number(s), size(s), and options that apply to the materials and equipment proposed for use on the project. No irrigation materials or equipment shall be delivered to the site until the product data sheets have been reviewed and approved by the Contracting Officer.

2.5 MATERIALS AND EQUIPMENT REQUIREMENTS

2.5.1 Standard Products

Materials and equipment shall be the standard products of a manufacturer who has produced similar systems which have performed well for a minimum period of 2 years prior to bid opening. Equipment shall be supported by a service organization that is, in the opinion of the Contracting Officer, reasonably convenient to the site.

2.5.2 Local Sponsor Equipment Requirements

The project's local sponsor, the City of Tempe, has obtained the Government's approval to require the use of proprietary or equal irrigation equipment, per design description. The use of this equipment will facilitate the City's stocking of spare parts and replacement materials. Proprietary, or equal items required for the project irrigation system are as noted on the project drawings.

2.5.3 Nameplates

Each item of equipment shall have the manufacturer's name, address, type or style, model or serial number, and catalog number on a plate secured to the item of equipment.

2.6 PIPING MATERIALS

2.6.1 Copper Tubing and Associated Fittings

Tubing shall conform to requirements of ASTM B 88, Type K. Fittings shall conform to ASME B16.22 and ASME B16.18, solder joint. Solder shall conform

to ASTM B 32 95-5 tin-antimony. Flux shall conform to CID A-A-51145, Type I. Grooved mechanical joints and fittings shall be designed for not less than 125 psig service and shall be the product of the same manufacturer. Grooved fitting and mechanical coupling housing shall be ductile iron conforming to ASTM A 536. Gaskets for use in grooved joints shall be molded synthetic polymer of pressure responsive design and shall conform to ASTM D 2000 for circulating medium up to 230 degrees F. Grooved joints shall conform to AWWA C606. Coupling nuts and bolts for use in grooved joints shall be steel and shall conform to ASTM A 183.

2.6.2 Red Brass Pipe and Associated Fittings

Pipe shall conform to requirements of ASTM B 43, regular. Fittings shall be Class 250, cast bronze threaded conforming to the requirements of ASME B16.15.

2.6.3 Galvanized Steel Pipe and Associated Fittings

Pipe shall conform to requirements of ASTM A 53/A 53M, Schedule 40. Fittings shall be Class 150 conforming to requirements of ASME B16.3.

2.6.4 Polyvinyl Chloride (PVC) Pipe, Fittings and Solvent Cement

2.6.4.1 PVC Pipe

Pipe shall conform to the requirements of ASTM D 1785, PVC 1120 Schedule 40 and Schedule 80.

2.6.4.2 PVC Fittings

Solvent welded socket type fittings shall conform to requirements of ASTM D 2466, Schedule 40 and Schedule 80. Threaded type fittings shall conform to requirements of ASTM D 2464, Schedule 80.

2.6.4.3 Solvent Cement

Solvent cement shall conform to the requirements of ASTM D 2564.

2.6.5 Dielectric Fittings

Dielectric fittings shall conform to ASTM F 441/F 441M, Schedule 80, CPVC threaded pipe nipples, 4 inch minimum length.

2.7 DRIP EMITTERS

2.7.1 Drip Emitters

Emitters shall be self-cleaning type with one or six outlets; Multi-outlet emitters shall have a 1/2" FPT inlet. Single Outlet emitters shall have a barbed inlet. An adapter fitting shall be used to connect the single-outlet emitters to the PVC pipe emitter riser. Flow rates for multi-outlet and single-outlet emitters shall be 1.0 gallon per hour per outlet. Emitter body shall be ultraviolet stabilized, algae, and heat resistant plastic construction.

2.7.2 Distrbution Tubing

Distribution tubing shall be constructed from flexible polyvinyl materials and shall have an O.D. of .220 inches and an I.D. of .160 inches. Distribution tubing shall be fully compatible with the emitters installed.

2.8 VALVES

2.8.1 Gate Valves, Less than or equal to four (4) Inches

Gate valves shall conform to the requirements of MSS SP-80, Type 1, Class 150, with threaded ends.

2.8.2 Gate Valves, Larger than 4"

Gate valves shall conform to the requirements of AWWA C509 and have encapsulated resilient wedge, parallel seats, non-rising stems, and open by counterclockwise turning. End connections shall be flanged. Interior construction of valves shall be bronze including stem containing a maximum 2 percent aluminum and maximum 16 percent zinc.

2.8.3 Ball Valves

Ball valves shall be constructed with brass or bonze body with FPT connections. Valves shall be equipped with PTFE seats and shall be pressure rated at not less than 400 psi WOG. Ball valves shall be equipped with a 1/4 (90 degree) turn on-off control handle.

2.8.4 Quick Coupling Valves

Quick coupling valves shall have brass parts and shall be two-piece unit consisting of a coupler water seal valve assembly and a removable upper body to allow spring and key track to be serviced without shutdown of main. Lids shall be lockable vinyl with spring for positive closure on key removal.

2.8.5 Remote Control Valves, Electrical

Remote control valves shall be solenoid actuated globe valves of 3/4 to 2 inch size, and shall be equipped with 24 volt, 50/60 cycle solenoid. Remote control valves shall be of the normally closed type designed to provide for shut-off in event of power failure. Valve shall be cast bronze or brass or plastic housing suitable for service at 150 psi operating pressure with external flow control adjustment for shut-off capability, external plug at diaphragm chamber to enable manual operation, filter in control chamber to prevent valve body clogging with debris, durable diaphragm, and accessibility to internal parts without removing valve from system.

2.8.6 Master Valve

The Master Valve shall be of the normally open, solenoid type with cast-iron body and threaded ends. The master valve shall be equipped with

a self-purging, self-cleaning 24 volt, 60 Hz., 3-way solenoid. Valve shall operate at 175 psi working pressure and pilot range from 10 to 200 psi.

2.8.7 In-Line Pressure Regulating Valves

In-Line Pressure regulating valves shall be of the permanently assembled type with heavy-duty plastic body and FPT ends. The valve shall have a pre-set outlet pressure of 40 psi.

2.8.8 Backflow Preventers (for irrigation and/or potable water)

Backflow preventers shall be of the reduced pressure principle type in accordance with ASSE 1013.

2.8.8.1 Reduced Pressure Type Backflow Preventers

Backflow preventers shall be constructed of bronze or brass with mounted gate valve and strainer, and stainless steel or bronze, internal parts. Total pressure drop through complete assembly shall be a maximum of 10 psi at rated flow. Piping for backflow preventer risers shall be copper as detailed. Units shall have 200-mesh stainless steel screen elements.

2.9 ACCESSORIES AND APPURTENANCES

2.9.1 Valve Boxes and Concrete Pads

2.9.1.1 Valve Boxes

Valve boxes and valve box lids shall be constructed of heavy-duty reinforced plastic or precast concrete with cast-iron lids. Valve box sizes and configurations shall be as noted on the drawings and shall be appopropriate for the valve or other piece of irrigation equipment enclosed, as determined by the Contracting Officer.

2.9.1.2 Concrete Pads

Concrete pads shall be precast or cast-in-place reinforced concrete construction for reduced pressure type backflow preventers.

2.9.2 Pressure Gauges

Pressure gauges shall conform to requirements of ASME B40.1, single style pressure gauge for water with 4-1/2 inch dial brass or aluminum case, bronze tube, gauge cock, pressure snubber, and siphon. Scale range shall be suitable for irrigation sprinkler systems.

2.9.3 Service Clamps

Service clamps shall be bronze flat, double strap, with neoprene gasket or "O"-ring seal.

2.9.4 Water Hammer Arresters

Water hammer arrester shall conform to the requirements of PDI WH 201; stainless steel construction with an encased and sealed bellows compression chamber.

2.9.5 Emitter Zone Accessories

2.9.5.1 Strainer (in-Line Filter)

A strainer shall be provided at each drip zone remote control valve assembly as detailed. The strainer (in-line filter) shall have a glass filled nylon body with an integral flushing valve. The strainer shall be equipped with a 200 mesh, removable, stainless-steel screen.

2.10 IRRIGATION CONTROL SYSTEM

2.10.1 Irrigation Control System

The irrigation control system provided as part of this project shall be fully compatible with the City of Tempe's Central Control system. The system shall be complete in all respects and Contractor shall be responsible for the supply and installation of all materials and equipment required for the proper operation of the project irrigation sytem. All incidental items required for the proper operation of the sytem, from the on-site controller(s) or from the City's off-site workstation, whether specifically called out or specified, shall be provided by the Contractor.

2.11 AUTOMATIC IRRIGATION CONTROLLER

Controllers shall be of the type and model noted on the project plans and shall be fully compatible with the City of Tempe's central control system. It shall have a 12 hour watering duration and shall be capable of operating four independent programs with eight start times each. The controller shall be equipped with two master valve terminals and shall be capable of operation by program or station. The controller shall have a heavy-duty transformer capable of simultaneous operation of nine 24 VAC, 7 VA solenoids.

2.12 CLUSTER CONTROL UNIT(S)

The Cluster Control Unit (CCU) shall be of the type and model noted on the project plans and shall be fully compatible with the City of Tempe's central Control system. The CCU shall be capable of serving as the communication interface between the off-site central control work station and up to six on-site controllers. The CCU shall communicate with the City of Tempe's off-site central control system via radio. The radio frequency used shall be 456.075 or a identified by the City of Tempe.

2.13 SECURITY ENCLOSURE(S)

The security enclosures used for the irrigation controllers and CCU shall be as noted on the project drawings, details, and schedules.

2.14 FLOW SENSOR

The flow sensor shall be of the type, model, and size noted on the project drawings and shall be fully compatible with the City of Tempe's central control system and the controller, CCU, and master valve installed.

2.15 COMMUNICATION CABLE

Cable for communication between the Cluster Control Unit (CCU) and the controllers and for communication between the flow sensor and the CCU shall be of the type, guagem, etc. as recommended by the irrigation control system manufacturer.

2.16 LOW VOLTAGE CONTROL WIRE

Low voltage control wire shall be Type UF insulated wire with solid copper core. Wire shall be UL approved fro direct burial. Wire size and insultation color shall be as follows:

Wire	Guage	Insulation Color
RCV Control Wire	#14 AWG	Red
RCV Common Wire	#12 AWG	White
Wire for Master Valve	#12 AWG	Green

2.17 MISCELLANEOUS EQUIPMENT

All miscellaneous equipment including, but not limited to, pulse decoders, surge protectors, and grounding equipment shall be provided, installed and tested by the Contractor. Miscellaneous equipment shall be as supplied by or approved by the irrigation control system manufacturer.

2.18 ELECTRICAL WORK

Wiring and rigid conduit for electrical power shall be in accordance with NFPA 70, and the project electrical plans, details, and specifications.

2.19 CONCRETE MATERIALS

Concrete shall have a compressive strength of 3000 psi at 28 days as specified.

PART 3 EXECUTION

3.1 INSTALLATION

The irrigation system shall be installed after the required site grading has been completed. Excavation, trenching, and backfilling for the irrigation system shall be in accordance with the applicable sections of the project specifications, except as modified herein.

3.1.1 Trenching

Trench around roots shall be hand excavated to pipe grade when roots of 2 inches diameter or greater are encountered. Trench width shall be 4 inches minimum or 1-1/2 times diameter of pipe, whichever is wider. Backfill shall be hand tamped over excavation. When rock is encountered, trench

shall be excavated 4 inches deeper and backfilled with silty sand (SM) or well-graded sand (SW) to pipe grade. Trenches shall be kept free of obstructions and debris that would damage pipe. Existing concrete walks, drives and other obstacles shall be bored at a depth conforming to bottom of adjacent trenches. Pipe sleeves for bored pipe shall be of the size noted on the drawings. Where not noted, the sleeve shall be two pipe diameters larger than enclosed irrigation pipe. No sleeve, including sleeves for control wire or communication cable shall be less than two inches (2") in diameter.

3.1.2 Piping System

3.1.2.1 Cover

Underground piping shall be installed to meet the minimum depth of backfill cover specified or detailed on the project drawings.

3.1.2.2 Clearances

Minimum horizontal clearances between lines shall be 4 inches for pipe 2 inches and less; 12 inches for 2-1/2 inches and larger. Minimum vertical clearances between lines shall be 1 inch.

3.1.3 Piping Installation

3.1.3.1 Polyvinyl Chloride (PVC) Pipe

a. Solvent-cemented joints shall conform to the requirements of ASTM D 2855.

b. Threaded joints shall be full cut with a maximum of three threads remaining exposed on pipe and nipples. Threaded joints shall be made tight without recourse to wicks or fillers, other than polytetrafluoroethylene thread tape.

c. Piping shall be joined to conform with requirements of ASTM D 2774 or ASTM D 2855, and pipe manufacturer's instructions. Pipe shall be installed in a serpentine (snaked) manner to allow for expansion and contraction in trench before backfilling. Pipes shall be installed at temperatures over 40 degrees F.

3.1.3.2 Soldered Copper Tubing

Pipe shall be reamed and burrs removed. Contact surfaces of joint shall be cleaned and polished. Flux shall be applied to male and female ends. End of tube shall be inserted into fittings full depth of socket. After soldering, a solder bead shall show continuously around entire joint circumference. Excess acid flux shall be removed from tubings and fittings.

3.1.3.3 Threaded Brass or Galvanized Steel Pipe

Prior to installation, pipe shall be reamed. Threads shall be cut in conformance with ASME B1.2. Pipe joint compound shall be applied to male end only.

3.1.3.4 Insulating Joints

Insulating and dielectric fittings shall be provided where pipes of dissimilar metal are joined and at connections to water supply mains as shown. Installation shall be in accordance with applicable sections of the project specifications.

3.1.3.5 Grooved Mechanical Joints

Grooves shall be prepared according to the coupling manufacturer's instructions. Grooved fittings, couplings, and grooving tools shall be products of the same manufacturer. Pipe and groove dimensions shall comply with the tolerances specified by the coupling manufacturer. The diameter of grooves made in the field shall be measured using a "go/no-go" gauge, vernier or dial caliper, narrow-land micrometer, or other method specifically approved by the coupling manufacturer for the intended application. Grove width and dimension of groove from end of pipe shall be measured and recorded for each change in grooving tool setup to verify compliance with the coupling manufacturer's tolerances. Grooved joints shall not be used in concealed locations.

3.1.4 Installation of Valves

Ball valves, gate valves, remote control valves, and master valves shall be installed as detailed on the project drawings. Each valve shall be installed in a valve access box as detailed. Install valve access boxes such that the top of the box is flush with and parallel to the surrouding grade. Provide gravel sumps and brick footings as detailed. In areas where more than one valve is to be installed in a given location, group boxes together and keep boxes within a uniform alignment. Provide adequate clearance around enclosed valves to allow for valve operation and/or removal.

3.1.5 Quick Coupling Valves

Quick-coupling valves shall be installed as-detailed

3.1.6 Installation of Drip Emitters

3.1.6.1 Emitters

Emitters shall be installed on a PVC pipe riser and enclosed in an emitter access box as detailed. Distribution tubing shall be extended from the emitter to the plant as detailed. The length of the distribution tubing shall not exceed ten feet (10').

3.1.7 Backflow Preventers

Backflow preventer(s) shall be installed in locations noted on the project plans and in a security enclosure as detailed. Backflow preventers shall be tested by a Certified Tester. Copies of the test results shall be provided to the Contracting Officer.

3.1.7.1 Reduced Pressure Type

Pipe lines shall be flushed prior to installing reduced pressure device; device shall be protected by a strainer located upstream. Device shall not be installed in pits or where any part of device could become submerged in standing water.

3.1.8 Control Wire and Conduit

3.1.8.1 Wires

Low voltage wires may be buried beside pipe in same trench. Rigid conduit shall be provided where wires run under paving. Wires shall be number tagged at key locations along main to facilitate service.

3.1.8.2 Loops

A 12 inch loop of wire shall be provided at each valve where control wires are connected to the remote control valves.

3.1.8.3 Expansion and Contraction

Multiple control wires shall be bundled and taped together at 100 foot intervals with 12 inch loop for expansion and contraction.

3.1.8.4 Splices

Electrical splices shall be waterproof.

3.1.9 Automatic Controller and CCU

Exact field location of controllers, CCU's and associated security cabinets shall be determined before installation and shall be approved by the Contracting Officer. Coordinate the electrical service to these locations. Install controller and CCU's in security enslosures as detailed. Install controllers and CCU's in accordance with manufacturer's recommendations and NFPA 70.

3.1.10 Thrust Blocks

Concrete shall be placed so that sides subject to thrust or load are against undisturbed earth, and valves and fittings are serviceable after concrete has set. Thrust blocks shall be as specified and/or detailed.

3.1.11 Backfill

3.1.11.1 Minimum Cover

Depth of cover shall be a minimum of 12 inches for lateral line pipes and 24 inches for mainline pipes.

3.1.12 Adjustment

After grading of planted areas, emitters and emitter access boxes shall be

adjusted so that the top of the box is flush with finished grade.

3.1.13 Cleaning of Piping

Prior to the hydrostatic and operation tests, the interior of the pipe shall be flushed with clean water until pipe is free of all foreign materials. Flushing and cleaning out of system pipe, valves, and components shall not be considered completed until witnessed and accepted by Contracting Officer.

3.2 FIELD TESTS

All instruments, equipment, facilities, and labor required to conduct the tests shall be provided by Contractor.

3.2.1 Hydrostatic Pressure Test

Mainline piping shall be tested hydrostatically before backfilling and proved tight at a hydrostatic pressure of 100 psi for a period of one hour with an allowable pressure drop of 5 psi. If hydrostatic pressure cannot be held for a minimum of 4 hours, Contractor shall make adjustments or replacements and the tests repeated until satisfactory results are achieved and accepted by the Contracting Officer.

3.2.2 Operation Test

At conclusion of the mainline pressure test, the lateral lines and emitters shall be installed and entire system tested for operation under normal operating pressure. Operation test consists of the system operating through at least one complete programmed cycle for all areas to be irrigated. Operational tests shall be performed in the presence of the Contracting Officer.

3.3 FRAMED INSTRUCTIONS

Framed instructions containing wiring and control diagrams under glass or in laminated plastic shall be posted where directed. Condensed operating instructions, prepared in typed form, shall be framed as specified above and posted beside the diagrams. The framed instructions shall be posted before acceptance testing of the system. After as-built drawings are approved by Contracting Officer, controller charts and programming schedule shall be prepared. One chart for each controller shall be supplied. Chart shall be a reduced drawing of actual as-built system that will fit the maximum dimensions inside controller housing. Black line print for chart and a different pastel or transparent color shall indicate each station area of coverage. After chart is completed and approved for final acceptance, chart shall be sealed between two 20 mil pieces of clear plastic.

3.4 FIELD TRAINING

A field training course shall be provided for designated operating and maintenance staff members. Training shall be provided for a total period of 16 hours of normal working time and shall start after the system is

functionally complete but prior to final acceptance tests. Field training shall cover all of the items contained in the operating and maintenance manuals.

3.5 CLEANUP

Upon completion of installation of system, all debris and surplus materials resulting from the work shall be removed.

-- End of Section --

SECTION TABLE OF CONTENTS

DIVISION 02 - SITE WORK

SECTION 02832

SEGMENTAL CONCRETE BLOCK RETAINING WALL

08/99

PART 1 GENERAL

1.1 REFERENCES
1.2 DEFINITIONS
1.3 SUBMITTALS
1.4 SEGMENTAL RETAINING WALL DESIGN
1.4.1 Shop Drawings
1.4.2 Design
1.4.3 Layout
1.5 CONTRACTOR QUALIFICATIONS
1.6 SUPPLIER QUALIFICATIONS
1.7 MANUFACTURER'S REPRESENTATIVE
1.8 DELIVERY, STORAGE AND HANDLING
1.8.1 Segmental Concrete Units and Wall Caps
1.8.2 Geosynthetic Labeling
1.8.3 Geosynthetic Handling
1.8.4 Geosynthetic Storage

PART 2 PRODUCTS

2.1 Manufacturer's Data
2.2 SEGMENTAL CONCRETE UNITS
2.2.1 Architectural requirements
2.2.2 Structural requirements
2.2.3 Wall Caps
2.3 REINFORCEMENT
2.3.1 Geogrid Reinforcement
2.3.2 Geotextile Reinforcement
2.3.3 Reinforcement Properties
2.3.3.1 Long Term Design Strength
2.4 SOILS AND AGGREGATES
2.5 MASONRY ADHESIVE
2.6 DRAINAGE PIPE

PART 3 EXECUTION

3.1 CLASSIFICATION OF SOIL MATERIALS
3.2 EARTHWORK
3.2.1 Excavation
3.2.2 Stockpiles
3.3 LEVELING PAD

3.3.1 Aggregate Base Leveling Pad
3.3.2 Concrete Leveling Pad
3.4 BLOCK INSTALLATION
3.5 REINFORCEMENT INSTALLATION
3.6 FILL PLACEMENT
3.7 COMPACTION
3.7.1 Degree of Compaction
3.7.2 Moisture Control
3.7.3 Compaction
3.8 SOIL TESTING
3.8.1 General
3.8.2 Transmittal
3.8.3 Corrective Action
3.8.4 Testing Schedule
3.9 CONSTRUCTION TOLERANCES
3.10 PROTECTION OF WORK

-- End of Section Table of Contents --

SECTION 02832

SEGMENTAL CONCRETE BLOCK RETAINING WALL
08/99

PART 1 GENERAL

This work element includes engineering services in addition to the construction requirements. The Contractor is responsible for engineering services that include design of the wall in accordance with the National Concrete Masonry Association (NCMA)design method, and providing shop drawings indicating all features of the complete design. This work element includes engineering in addition to the construction requirements. The NCMA design method for segmental retaining walls considers potential failure modes categorized by external, internal, local, compound, and global stability. The Contractor is responsible for engineering services that include analysis of the wall for all modes of stability, and providing shop drawings indicating all features of the complete design.

1.1 REFERENCES

The publications listed below form a part of the specification to the extent referenced. The publications are referred to in the text by basic designation only.

AMERICAN SOCIETY FOR TESTING AND MATERIALS (ASTM)

ASTM C 136	(1996a) Sieve Analysis of Fine and Coarse Aggregates
ASTM C 140	(1999b) Sampling and Testing Concrete Masonry Units
ASTM C 1372	(1997) Segmental Retaining Wall Units
ASTM D 698	(1998) Laboratory Compaction Characteristics of Soil Using Standard Effort (12,400 ft-lbf/cu. ft.)
ASTM D 1241	(1968; R 1994) Materials for Soil-Aggregate Subbase, Base, and Surface Courses
ASTM D 1556	(2000) Density and Unit Weight of Soil in Place by the Sand-Cone Method
ASTM D 2487	(2000) Classification of Soils for Engineering Purposes (Unified Soil Classification System)

ASTM D 2488	(1993) Description and Identification of Soils (Visual-Manual Procedure)
ASTM D 4355	(1992) Deterioration of Geotextiles from Exposure to Ultraviolet Light and Water (Xenon-Arc Type Apparatus)
ASTM D 4491	(1996) Water Permeability of Geotextiles by Permittivity
ASTM D 4595	(1986; R 1994) Tensile Properties of Geotextiles by the Wide-Width Strip Method
ASTM D 4632	(1991; R 1996) Grab Breaking Load and Elongation of Geotextiles
ASTM D 4751	(1995) Determining Apparent Opening Size of a Geotextile
ASTM D 4873	(1997) Identification, Storage, and Handling of Geosynthetic Rolls
ASTM D 5321	(1992) Determining the Coefficient of Soil and Geosynthetic or Geosynthetic and Geosynthetic Friction by the Direct Shear Method

FEDERAL HIGHWAY ADMINISTRATION (FHWA)

FHWA SA-96-071	(1997) Mechanically Stabilized Earth Walls and Reinforced Soil Slopes: Design and Construction Guidelines

GEOSYNTHETIC INSTITUTE (GSI)

GSI GRI GG1	(1988) Geogrid Rib Tensile Strength
GSI GRI GG5	(1991) Geogrid Pullout
GSI GRI GG6	(1992) Grip Types for Use in the Wide Width Testing of Geotextiles and Geogrids
GSI GRI GT6	(1992) Geotextile Pullout

NATIONAL CONCRETE MASONRY ASSOCIATION (NCMA)

NCMA SRWU-1	(1997) Determination of Connection Strength between Geosynthetics and Segmental Concrete Units
NCMA SRWU-2	(1997) Determination of Shear Strength between Segmental Concrete Units
NCMA SRW Manual	(1997) Design Manual for Segmental

	Retaining Walls, 2nd Edition
NCMA Seismic Manual	(1998) Segmental Retaining Walls - Seismic Design Manual, 1st Edition

1.2 DEFINITIONS

a. Blocks. Segmental concrete retaining wall units will be referred to as blocks.

b. Drainage Aggregate. Granular soil or aggregate which is placed within, between, and/or immediately behind segmental concrete units.

c. Fill. Soil or aggregate placed in, behind, or below the wall will be referred to as fill.

d. Reinforced Fill. Soil which is placed and compacted within the neat line volume of reinforcement as outlined on the plans.

e. Retained Fill. Soil which is placed and compacted behind the reinforced fill.

f. Reinforcement. Reinforcement shall consist of a geogrid or a geotextile product manufactured for use as reinforcing. Reinforcement shall not include steel products.

g. Long Term Design Strength. The long term design strength (LTDS) is:

$$LTDS = T_{ult} / (RF_D * RF_{ID} * RF_{CR})$$

where:

T_{ult} is the ultimate strength
RF_D is the reduction factor for chemical and biological durability
RF_{ID} is the reduction factor for installation damage
RF_{CR} is the reduction factor for creep

1.3 SUBMITTALS

Government approval is required for submittals with a "G" designation; submittals not having a "G" designation are for information only. The following shall be submitted in accordance with Section 01330 SUBMITTAL PROCEDURES:

SD-02 Shop Drawings

Shop Drawings; G

The fabrication and installation drawings shall be submitted. The shop drawings shall include all items described under paragraph SEGMENTAL RETAINING WALL DESIGN. If approved by the Contracting Officer, shop drawings may consist of marked up contract drawings plus such supplemental drawings showing the exact dimensions for the blocks supplied, required coping, and

other wall features.

SD-03 Product Data

Manufacturer's Data; G

The Contractor shall submit descriptive technical data on the blocks, wall caps, masonry adhesive, reinforcement and geotextile filter materials. The submittal shall include all material properties specified under paragraph PRODUCTS. The submittal shall also include a copy of any standard manufacturer's warranties for the products.

Calculations; G

The Contractor shall submit design calculations, including computer output data and program documentation. The calculations shall include all items described under PARAGRAPH: SEGMENTAL RETAINING WALL DESIGN.

SD-04 Samples

Segmental Concrete Units; G

The Contractor shall submit two samples of each proposed block. Each sample shall be typical of the size, texture, color, and finish.

Reinforcement; G

The Contractor shall submit samples of each type of reinforcement. The samples shall be labeled and have a minimum size 8 by 10 inches.

SD-07 Certificates

Reinforcement; G

The Contractor shall submit an affidavit certifying that the reinforcement meets the project specifications.

1.4 SEGMENTAL RETAINING WALL DESIGN

The Contractor shall complete all stability analyses in accordance with either the NCMA SRW Manual, or the Federal Highway Administration/AASHTO method detailed in FHWA SA-96-071. Only one method shall be followed for the complete design, including reinforcement design strength, layout, stability calculations, and seismic effects. The segmental retaining wall system shall be designed under the direction of, and be signed by, a professional engineer.

1.4.1 Shop Drawings

The fabrication and installation drawings shall be submitted. The shop drawings shall include all items described under paragraph SEGMENTAL RETAINING WALL DESIGN. If approved by the Contracting Officer, shop drawings may consist of marked up contract drawings plus such supplemental drawings showing the exact dimensions for the blocks supplied, required coping, and other wall features.

1.4.2 Design

Calculations shall include determination of long term design strength of reinforcement specific to this project in accordance with the NCMA SRW Manual or FHWA SA-96-071. Calculations shall include analysis of all failure modes listed in the NCMA SRW Manual. Design calculations shall include a clear outline of material properties and assumptions.

1.4.3 Layout

Shop drawings shall reflect all information needed to fabricate and erect the walls including the leveling pad elevations; the shape and dimensions of wall elements; the number, size, type, and details of the soil reinforcing system and anchorage; and identification of areas requiring coping. The design and layout of the internal reinforcement shall be subject to the following:

a. All features indicated in the contract documents shall be incorporated in the final design and construction.

b. The leveling pad elevations may vary, but shall be no higher than the embedment depth profile shown.

c. Each reinforcement level shall run as continuous as practical throughout the profile.

d. Any reinforcement not placed with the machine direction as the design reinforcement direction shall be identified on the shop drawings.

e. Reinforcement attached to the wall facing shall not combine geogrid and geotextile, nor products from different manufacturers, within one wall. The number of reinforcement products shall be limited to avoid confusion in placement. For walls under 12 feet high, all reinforcement shall be the same grade and strength (i.e. design with one reinforcement strength).

1.5 CONTRACTOR QUALIFICATIONS

The job foreman or the company directly responsible for the wall installation shall have prior experience with segmental concrete retaining wall construction.

1.6 SUPPLIER QUALIFICATIONS

Suppliers of segmental retaining wall system components shall have demonstrated experience in the supply of similar size and types of

segmental retaining walls on previous projects.

1.7 MANUFACTURER'S REPRESENTATIVE

The Contractor shall have a qualified and experienced representative from the block or reinforcement manufacturer available on an as-needed basis during the wall construction.

1.8 DELIVERY, STORAGE AND HANDLING

The Contractor shall check products upon delivery to assure that the proper material has been received and is undamaged. For geosynthetics, the guidelines presented in ASTM D 4873 shall be followed.

1.8.1 Segmental Concrete Units and Wall Caps

The Contractor shall protect blocks from damage and exposure to cement, paint, excessive mud, and like materials.

1.8.2 Geosynthetic Labeling

Each roll shall be labeled with the manufacturer's name, product identification, roll dimensions, lot number, and date manufactured.

1.8.3 Geosynthetic Handling

Geosynthetic rolls shall be handled and unloaded by hand, or with load carrying straps, a fork lift with a stinger bar, or an axial bar assembly. Geosynthetic rolls shall not be dragged, lifted by one end, lifted by cables or chains, or dropped to the ground.

1.8.4 Geosynthetic Storage

Geosynthetics shall be protected from cement, paint, excessive mud, chemicals, sparks and flames, temperatures in excess of 160 degrees F, and any other environmental condition that may degrade the physical properties. If stored outdoors, the rolls shall be elevated from the ground surface.

PART 2 PRODUCTS

2.1 Manufacturer's Data

The Contractor shall submit descriptive technical data on the blocks, wall caps, masonry adhesive, reinforcement and geotextile filter materials. The submittal shall include all material properties specified under paragraph PRODUCTS. The submittal shall also include a copy of any standard manufacturer's warranties for the products.

2.2 SEGMENTAL CONCRETE UNITS

2.2.1 Architectural requirements

a. Face color -Tan or light brown as selected by the Contracting Officer.

b. Face Texture - split face .

c. Face Appearance - straight, .

d. Batter - Blocks shall be engaged to the block below by use of keys, lips, pins, clips, or other reliable mechanism to provide a consistent wall batter of 1H:16V.

e. Block Size - a minimum of 8 inch height.

f. Bond configuration - No bond configuration is required for straight face blocks. Blocks shall be designed to stack with a half-bond (joints located at midpoint of vertically adjacent blocks). The block edges shall be finished so that vertical joints are flush.

2.2.2 Structural requirements

The blocks shall be manufactured to the requirements of ASTM C 1372, except for the following modifications:

a. Minimum 28-day compressive strength of 4500 psi, based on net area in accordance with ASTM C 140.

b. A maximum moisture absorption rate of 9 pcf, in accordance with ASTM C 140.

c. The minimum oven dry density of concrete shall be 125 pcf

d. The blocks shall provide a minimum of 80 pounds per square foot of wall face area (determined without void filling).

2.2.3 Wall Caps

Segmental concrete block units shall be placed as caps on top of all segmental concrete retaining walls. The cap blocks shall have a color and texture on exposed faces to match that of the other blocks and meet the requirements for the other blocks except that the minimum height shall be 3 inches. Each cap block shall have abutting edges saw cut or formed to provide tight, flush abutting joints with no gaps in the joints when placed end to end in the alignment shown on the drawings.

2.3 REINFORCEMENT

2.3.1 Geogrid Reinforcement

Geogrid shall be a geosynthetic manufactured for reinforcement applications. The geogrid shall be a regular network of integrally connected polymer tensile elements with aperture geometry sufficient to permit significant mechanical interlock with the surrounding soil, aggregate, or other fill materials. The geogrid structure shall be dimensionally stable and able to retain its geometry under manufacture, transport and installation. The geogrid shall be manufactured with 100 percent virgin resin consisting of polyethylene, polypropylene, or

polyester, and with a maximum of 5 percent in-plant regrind material. Polyester resin shall have a minimum molecular weight of 25,000 and a carboxyl end group number less than 30. Polyethylene and polypropylene shall be stabilized with long term antioxidants.

2.3.2 Geotextile Reinforcement

Geotextile shall be a pervious sheet of polymeric material and shall consist of long-chain synthetic polymers composed of at least 95 percent by weight polyethylene, polypropylene, or polyesters. The geotextile shall be manufactured with 100 percent virgin resin, and with a maximum of 5 percent in-plant regrind material. Geotextile shall be formed into a network such that the filaments or yarns retain dimensional stability relative to each other, including the selvages. Polyester resin shall have a minimum molecular weight of 20,000 and a carboxyl end group number less than 50. Polyethylene and polypropylene shall be stabilized with long term antioxidants.

For survivability during installation, and in addition to installation damage used in calculating the long term design strength, the geotextile shall meet the minimum requirements in AASHTO M 288 Class 1, and shall have a minimum mass per unit area of 8 oz/sy.

2.3.3 Reinforcement Properties

The reinforcement shown in the approved shop drawing submittal shall meet the long term design strength requirements used in the design.

2.3.3.1 Long Term Design Strength

The long term design strength shall be based on reduction factors for installation damage and durability that are applicable to the fill that will be used. Minimum reduction factors for durability include: 1.1 for polyethylene and polypropylene geosynthetics, 1.15 for coated polyester geogrids, and 1.6 for polyester geotextiles. The creep reduction factor must be consistent with the test procedure used for determining the ultimate strength.

2.4 SOILS AND AGGREGATES

All material placed as fill shall consist of material classified by ASTM D 2487 as GW, GP, GC, GM, SP, SM, SC, CL, ML, or SW. The material shall be free of trash; debris; sod; roots; organic matter; contamination from hazardous, toxic or radiological substances; or stones larger than 3 inches in any dimension. Each material shall be obtained entirely from one borrow source, unless the Contracting Officer determines that quality control is adequate and the alternate source produces material that is similar in gradation, texture, and interaction with the reinforcement. The Contractor shall supply any testing required by the Contracting Officer to evaluate alternate sources. All materials shall be of a character and quality satisfactory for the purpose intended.

a. Drainage Aggregate shall meet the requirements of ASTM D 448, size

No. 7.

b. Aggregate Base material for the wall leveling pads shall meet the requirements of ASTM D 1241, gradation C.

c. Reinforced Fill. Soil placed in the reinforced fill zone shall consist of granular material with less than 5 percent passing the No. 200 sieve.

c. Retained Fill. Soil placed in the retained fill zone shall meet the minimum requirements above.

2.5 MASONRY ADHESIVE

The masonry adhesive shall meet the following requirements:

a. ASTM C 920, Type S, Grade NS, Class 25
b. expected 30 year life
c. meet the recommendations of the block manufacturer

2.6 DRAINAGE PIPE

The drainage pipe, if required by the approved shop drawings, shall be corrugated polyethylene pipe meeting requirements of AASHTO M 252.

PART 3 EXECUTION

3.1 CLASSIFICATION OF SOIL MATERIALS

Classification of soil materials shall be performed by the Contractor in accordance with ASTM D 2488. The Contracting Officer reserves the right to revise the Contractor classifications. In the case of disagreement, the Contracting Officer's classification will govern unless the soils are classified in accordance with ASTM D 2487. All testing completed by the Contractor in conjunction with soil material classification will be considered incidental to the contract work.

3.2 EARTHWORK

The leveling pad and reinforced fill zone shall bear on undisturbed native soils, or acceptably placed and compacted fill. In the event that it is necessary to remove material to a depth greater than specified or to place fill below the leveling pad not otherwise provided for in the contract, the Contracting Officer shall be notified prior to work and an adjustment in the contract price will be considered in accordance with the contract. Additional work not authorized by the Contracting Officer shall be at the Contractor's expense.

3.2.1 Excavation

Foundation soil shall be excavated as required for leveling pad dimensions and reinforcement placement shown on the construction drawings. Material for backfilling shall be stockpiled in a neat and orderly manner at a sufficient distance from the banks of the excavation to avoid overloading

and to prevent slides or caving. Excavation and fill shall be performed in a manner and sequence that will provide proper drainage at all times. The Contractor is responsible for disposal of surplus material, waste material, and material that does not meet specifications, including any soil which is disturbed by the Contractor's operations or softened due to exposure to the elements and water.

3.2.2 Stockpiles

Stockpiles of all material to be incorporated into the work shall be kept in a neat and well drained condition, giving due consideration to drainage at all times. The ground surface at stockpile locations shall be cleared, grubbed, and sealed. Topsoil shall be stockpiled separately from suitable backfill material. Stockpiles of aggregates and granular soils shall be protected from contamination which may destroy the quality and fitness of the stockpiled material. If the Contractor fails to protect the stockpiles, and any material becomes saturated, intermixed with other materials, or otherwise out of specification or unsatisfactory for the use intended, such material shall be removed and replaced with new material from approved sources at no additional cost to the Government.

3.3 LEVELING PAD

3.3.1 Aggregate Base Leveling Pad

The subgrade below the leveling pad shall be compacted with at least 3 passes with a vibratory plate compactor with an operating weight not less than 450 pounds. The aggregate base material shall be placed in lifts not exceeding 6 inches and compacted with at least 3 passes with a vibratory plate compactor. If the subgrade or aggregate base pumps, bleeds water, or cracks during compaction, the Contracting Officer shall be notified and, if no other changes are directed, the aggregate shall be replaced with a concrete leveling pad.

3.3.2 Concrete Leveling Pad

Tolerances in screeding shall be sufficient to place the blocks directly on the leveling pad without mortar, pointing, or leveling course between the blocks and leveling pad.

3.4 BLOCK INSTALLATION

The wall system components shall be constructed in accordance with the wall supplier's recommendations and the approved shop drawings. Damaged blocks shall not be incorporated in the retaining wall.

a. Block placement shall begin at the lowest leveling pad elevation. The blocks shall be in full contact with the leveling pad. Each course of block shall be placed sequentially for the entire wall alignment to maintain a level working platform for layout of reinforcement and placement of fill.

b. The grade and alignment of the first course shall be surveyed and the results furnished to the Contracting Officer prior to placing the

second course. Survey control for alignment shall include a string line, offset from a base line, or suitable provisions that can be reproduced for quality assurance.

c. The blocks shall be placed with the edges in tight contact. No gap shall be allowed for wall batter and curvature. The vertical joints shall be maintained with a minimum 4 inch overlap on the underlying block. Coping required to keep block alignment shall be done with a full depth saw cut. No splitting shall be allowed.

d. Stacking of blocks prior to filling any lower course of block with drainage aggregate will not be allowed.

e. Cap units and the top two course of blocks shall be joined using masonry adhesive. Care shall be taken to keep adhesive from coming into contact with the face of wall units.

3.5 REINFORCEMENT INSTALLATION

a. Before placing reinforcement, the subgrade or subsequent lift of fill shall be compacted and graded level with the top of the blocks. The surface shall be smooth and free of windrows, sheepsfoot impressions, and rocks.

b. Reinforcement shall be placed at the elevations and to the extent shown on the approved shop drawing submittal. Reinforcement shall be oriented with the design strength axis perpendicular to the wall face. Each segment of reinforcement shall be continuous. Spliced connections between shorter pieces of reinforcement will not be allowed. Reinforcement strips shall be placed immediately next to adjacent strips to provide 100 percent coverage.

c. The reinforcement shall be installed in tension. The reinforcement shall be pulled taut and anchored with staples or stakes prior to placing the overlying lift of fill. The tension shall be uniform along the length of the wall and consistent between layers.

d. All reinforcement shall be 100% covered by soil so that reinforcement panels do not contact in overlaps. Where the wall bends, a veneer of fill shall be placed to a nominal thickness of 3 inches to separate overlapping reinforcement.

3.6 FILL PLACEMENT

a. Fill placement, including drainage aggregate, shall be completed to the top of each course of facing blocks prior to stacking the subsequent course of blocks.

b. Reinforced fill shall be placed from the wall back toward the fill area to ensure that the reinforcement remains taut. Fill shall be placed, spread, and compacted in such manner that minimizes the development of wrinkles in or movement of the reinforcement.

c. A minimum fill thickness of 6 inches is required prior to operation

of vehicles over the reinforcement.

d. Drainage aggregate shall be placed and tamped directly behind, between, and within the cells of the facing units. Compaction of the drainage aggregate shall be achieved by at least two passes on each lift with a vibratory plate compactor. Care shall be taken not to contact or chip the blocks with the compactor. Aggregate placed within the block cores and recesses shall be compacted by hand tamping and rodding.

e. At the end of each day, the Contractor shall slope the last lift of fill away from the wall in a manner that will allow drainage and direct runoff away from the wall face.

3.7 COMPACTION

Fill shall not be placed on surfaces that contain mud, organic soils, fill soils that have not met compaction requirements, or where the Contracting Officer determines that unsatisfactory material remains in or under the fill. Fill shall be spread and compacted in lifts not exceeding the height of one course of blocks.

3.7.1 Degree of Compaction

Degree of compaction required is expressed as a percentage of the maximum density obtained by the test procedure presented in ASTM D 698. The maximum density is hereafter abbreviated as the "Standard Proctor" value.

3.7.2 Moisture Control

Control of moisture in the fill shall be maintained to provide acceptable compaction.

3.7.3 Compaction

Reinforced and retained fill shall be compacted to 95 percent of the Standard Proctor Density. Care shall be exercised in the compaction process to avoid misalignment of the facing blocks. Heavy compaction equipment, including vibratory drum rollers, shall not be used within 3 feet from the wall face.

3.8 SOIL TESTING

3.8.1 General

All testing expenses shall be the Contractor's responsibility. Prior to sampling and testing the work, testing laboratories may be inspected and approved in accordance with Section 01451, CONTRACTOR QUALITY CONTROL. The Contracting Officer reserves the right to direct the location and select the material for samples to be tested and to direct where and when moisture-density tests shall be performed. Nuclear density testing equipment shall be used in general accordance with ASTM D 2922.

3.8.2 Transmittal

The Contracting Officer shall be informed of test results daily for direction on corrective action required. Draft copies of field testing results shall be furnished to the Contracting Officer on a frequent and regular basis, as directed.

3.8.3 Corrective Action.

Tests of materials which do not meet the contract requirements (failing test) will not be counted as part of the required testing. Each such failing test must be retaken at the same location as the failing test was taken. If testing indicates material does not meet the contract requirements, the material represented by the failing test shall not be placed in the contract work or shall be recompacted or removed. The quantity of material represented by the failing test shall be determined by the Contracting Officer up to the quantity represented by the testing frequency. The Contractor may increase testing frequency in the vicinity of a failing test in order to reduce removal requirements, as approved by the Contracting Officer. Such increases in testing frequency shall be at the Contractor's expense and at no additional cost to the Government.

3.8.4 Testing Schedule

Moisture-Density Relations (ASTM D 698)

One test for each material variation, not less than one (1) test total.

In-Place Densities (ASTM D 1556 or ASTM D 2922)

Not less than 1 test for each 2 vertical feet per 200 linear feet along wall face.

Sieve Analysis, (ASTM C 136)

(1) Drainage Aggregate, 1 test for each source.

3.9 CONSTRUCTION TOLERANCES

a. Horizontal: The top of wall shall be within 3 inches of the plan location.

b. Vertical: The top of wall elevations shall be within 0.1 feet above to 0.1 feet below the prescribed top of wall elevations shown on the drawings.

c. Plumbness and Alignment: The wall batter and alignment offset measured as deviation from a straight edge shall be within plus or minus 1.25 inches per 10 feet section. The batter measured from vertical shall be within 2 degrees of the plan dimension.

d. Block Defects: The blocks will be accepted on the basis of tolerances specified in ASTM C 1372.

e. Block Gaps: Gaps between adjacent blocks shall not exceed 1/8 inch.

3.10 PROTECTION OF WORK

Work shall be protected against damage from subsequent operations. Disturbed or displaced blocks shall be removed and replaced to conform to all requirements of this section. Damaged material shall not be incorporated into the wall. Upon completion of wall erection, the Contractor shall clean the wall face to remove any loose soil deposits or stains.

-- End of Section --

SECTION TABLE OF CONTENTS

DIVISION 02 - SITE WORK

SECTION 02870A

SITE FURNISHINGS

PART 1 GENERAL

1.1 REFERENCES
1.2 SUBMITTALS
1.3 DELIVERY, STORAGE, AND HANDLING
1.4 INSPECTION

PART 2 PRODUCTS

2.1 MATERIALS
2.1.1 Concrete
2.1.1.1 Cast-in-Place Concrete
2.1.2 Masonry
2.1.3 Metal
2.1.3.1 Steel
2.2 HARDWARE
2.3 ANCHORS
2.4 FINISH
2.4.1 Coatings
2.4.1.1 Galvanizing
2.4.1.2 Polyester Powder
2.4.1.3 Polyvinyl-chloride (PVC)
2.4.2 Paint
2.4.3 Color
2.5 SITE FURNISHING STANDARDS
2.5.1 Benches and Chairs
2.5.1.1 Height of Benches and Chairs
2.5.1.2 Seat
2.5.1.3 Back Rest
2.5.1.4 Arm Rest
2.5.2 Trash and Litter Receptacles
2.5.2.1 Liners
2.5.2.2 Anchors
2.5.2.3 Openings
2.5.3 Bicycle Racks or Stanchions

PART 3 EXECUTION

3.1 INSTALLATION
3.1.1 Application of Field Finishes
3.1.2 Parts
3.1.3 Assembly
3.1.4 Testing

3.2 RESTORATION AND CLEAN UP
3.2.1 Clean Up
3.3 RE-INSTALLATION

-- End of Section Table of Contents --

SECTION 02870A

SITE FURNISHINGS

PART 1 GENERAL

1.1 REFERENCES

The publications listed below form a part of this specification to the extent referenced. The publications shall be referred to in the text by basic designation only.

AMERICAN SOCIETY FOR TESTING AND MATERIALS (ASTM)

ASTM A 36/A 36M	(2000a) Carbon Structural Steel
ASTM A 123/A 123M	(2001; Rev. A) Zinc (Hot-Dip Galvanized) Coatings on Iron and Steel Products
ASTM A 153/A 153M	(2001; Rev. A) Zinc Coating (Hot-Dip) on Iron and Steel Hardware
ASTM A 500	(1999) Cold-Formed Welded and Seamless Carbon Steel Structural Tubing in Rounds and Shapes
ASTM A 501	(1999) Hot-Formed Welded and Seamless Carbon Steel Structural Tubing
ASTM C 150	(1999a) Portland Cement

1.2 SUBMITTALS

Government approval is required for submittals with a "G" designation; submittals not having a "G" designation are for information only. The following shall be submitted in accordance with Section 01330 SUBMITTAL PROCEDURES:

SD-02 Shop Drawings.

Site Furnishing Standards; G

Drawings showing scaled details of proposed site furnishings, elevations for each type of site furnishing; dimensions, details, and methods of mounting or anchoring; shape and thickness of materials; and details of construction.

SD-03 Product Data

Site Furnishings; G

Manufacturer's descriptive data and catalog cuts.

Installation; G

Manufacturer's installation and maintenance instructions.

Materials; G

A listing indicating the furnishings provided have been in proven satisfactory use for at least 2 years.

SD-04 Samples

Finish; G

Two sets of color data for each furnishing displaying manufacturer's color selections and finishes, and identifying those colors and finishes proposed for use.

SD-06 Test Reports
Testing

1.3 DELIVERY, STORAGE, AND HANDLING

Materials shall be delivered, handled, and stored in accordance with the manufacturer's recommendations. The storage area shall be as designated. The materials shall be stored in a dry, covered area until installed.

1.4 INSPECTION

Site furnishings shall be inspected upon arrival at the job site for conformity to specifications and quality in accordance with paragraph MATERIALS. Unacceptable items shall be removed from the job site.

PART 2 PRODUCTS

2.1 MATERIALS

Materials shall be the standard products of a manufacturer regularly engaged in the manufacture of such products. The materials provided shall be of a type with proven satisfactory use for at least 2 years. Site furnishing items shall be of the make, model, size, and finish as noted on the project plans. The project's local sponsor, the City of Tempe, has obtained approval from the Government to require the use of proprietary site furnishings. The use of these items will facilitate the stocking of replacement items and spare parts by the City.

2.1.1 Concrete

Portland cement shall conform to ASTM C 150 Types I, II, or III.

2.1.1.1 Cast-in-Place Concrete

Cast-in-place concrete materials and products shall conform to the requirements of applicable sections of these specifications.

2.1.2 Masonry

Masonry material and products shall conform to the requirements of applicable sections of these specifications.

2.1.3 Metal

Metallic materials and products shall conform to the requirements of applicable sections of these specifications. Metal components shall be furnished with factory drilled holes. Components shall be free of excess weld and spatter. Metal components with holes that will not be filled by hardware or hidden by other components will be rejected.

2.1.3.1 Steel

Structural steel products shall conform to ASTM A 36/A 36M, ASTM A 500 and ASTM A 501.

2.2 HARDWARE

Hardware shall be stainless steel, brass, zinc-plated, zinc-chromate plated, or galvanized steel in accordance with ASTM A 153/A 153M and compatible with the material to which applied. All exposed hardware shall match in color and finish. Mounting hardware shall be concealed, recessed, and plugged.

2.3 ANCHORS

Anchors shall be provided, where necessary, for fastening site furnishings securely in place and in accordance with approved manufacturer's instructions. Anchoring devices that may be used, when no anchors are otherwise specified or indicated, include anchor bolts, slotted inserts, expansion shields for concrete; toggle bolts and through bolts for masonry; machine carriage bolts for steel; and lag bolts and screws for wood.

2.4 FINISH

Finish shall be as specified by the manufacturer or as indicated. Exposed surfaces and edges shall be rounded, polished, or sanded. Finish shall be non-toxic, non-glare, and resistant to corrosion. Exposed surfaces shall be smooth and splinter-free exposed surfaces.

2.4.1 Coatings

2.4.1.1 Galvanizing

Galvanized components shall be hot-dipped in zinc after fabrication in accordance with ASTM A 123/A 123M. Tailings and sharp protrusions formed as a result of the hot-dip process shall be removed and exposed edges burnished.

2.4.1.2 Polyester Powder

Powder-coated surfaces shall receive electrostatic zinc coating prior to painting. Powder coating shall be electrostatically applied and oven cured. Polyester powder coating shall be resistant to ultraviolet (UV) light.

2.4.1.3 Polyvinyl-chloride (PVC)

PVC coating shall be primed with a clear acrylic thermosetting solution. The primed parts shall be preheated prior to dipping. The liquid polyvinyl chloride shall be ultraviolet (UV) stabilized and mold-resistant. The coated parts shall be cured. The coating shall be a minimum 2/25 inches thick plus or minus 0.020 inches and shall have an 85 durometer hardness with a slip-resistant finish.

2.4.2 Paint

Paint shall be factory applied with a minimum of 2 coats. Paint shall be weather-resistant and resistant to cracking, peeling and fading.

2.4.3 Color

Color of site furnishing components shall be as noted on the drawings or as approved by the Contracting Officer..

2.5 SITE FURNISHING STANDARDS

Site furnishings shall be furnished with the dimensions and requirements indicated.

2.5.1 Benches and Chairs

Benches and chairs shall be of the type, model, color, size, and finish as noted on the project drawings.

2.5.1.1 Height of Benches and Chairs

The height above finished grade or specified surface shall be between 18-20 inches and level.

2.5.1.2 Seat

The seat surface shall be pitched or slotted to shed water; the seat depth shall be between 12-18 inches and pitched down at the back at a 0-5 degree angle. Seat shall have a minimum width of 24 inches per person, and shall overhang the support base by a minimum of 4 inches for heel space and to facilitate rising from a seating position.

2.5.1.3 Back Rest

When back rests are required, the height shall be between 15-18 inches from the top of the seat and the connection shall be at a 90-110 degree angle to the seat.

2.5.1.4 Arm Rest

When arm rests are required, a minimum of 6 inches height from the seat and a minimum arm rest width of 1-1/2 inches shall be provided.

2.5.2 Trash and Litter Receptacles

Trash and litter receptacles shall be furnished with weather protection, odor containment, and insect/animal-proofing. Container type, model, size, and finish shall be as noted on the project drawings.

2.5.2.1 Liners

Trash and litter receptacles shall be furnished with removable/reusable inner containers.

2.5.2.2 Anchors

Trash and litter receptacles that can be anchored to resist overturning by typical use, high winds, or animals shall be furnished and anchored in accordance with the manufacturer's recommendations.

2.5.2.3 Openings

Openings for trash and litter insertion shall be a minimum of 4 inches in diameter. Edges of the openings shall be crimped, rounded and smoothed.

2.5.3 Bicycle Racks or Stanchions

Bicycle racks or stanchions shall be of the type, model, size, and finish as noted on the project drawings. The bicycle racks shall accommodate locking devices and secure, as a minimum, one wheel and part of the frame simultaneously.

PART 3 EXECUTION

3.1 INSTALLATION

The Contractor shall verify that finished grades and other operations affecting mounting surfaces have been completed prior to the installation of site furnishings. Site furnishings shall be installed plumb and true in accordance with the approved manufacturer's instructions.

3.1.1 Application of Field Finishes

Where indicated, field finishes shall be applied in accordance with the furnishing manufacturer's written recommendations.

3.1.2 Parts

New parts shall be acquired from the manufacturer. Substitute parts will not be accepted unless approved by the manufacturer.

3.1.3 Assembly

When the inspection of parts has been completed, the site furnishings shall be assembled and anchored according to manufacturer's instructions or as indicated. When site furnishings are assembled at the site, assembly shall not interfere with other operations or pedestrian and vehicular circulation.

3.1.4 Testing

Each site furnishing shall be tested to determine a secure and correct installation. A correct installation shall be according to the manufacturer's recommendations and by the following procedure: The Contractor shall measure the physical dimensions and clearance of each installed site furnishing for compliance with manufacturer's recommendations and as indicated. Site furnishings which do not comply shall be reinstalled. Fasteners and anchors determined to be non-compliant shall be replaced. A written report describing the results of the testing shall be provided.

3.2 RESTORATION AND CLEAN UP

When the installation has been completed, the Contractor shall clean up and protect the site. Existing areas that have been damaged from the installation operation shall be restored to original condition at Contractor's expense.

3.2.1 Clean Up

The site shall be cleaned of all materials associated with the installation. Site furnishing surfaces shall be cleaned of dirt, stains, filings, and other blemishes occurring from shipment and installation. Cleaning methods and agents shall be according to manufacturer's instructions or as indicated.

3.3 RE-INSTALLATION

Where re-installation is required, the following shall be accomplished:

a. Re-install the product as specified. Material acquisition of replacement parts is the responsibility of the Contractor. Provide replacement materials that are new and supplied by the original manufacturer to match.

b. Damage caused by the failed installation shall be repaired.

-- End of Section --

SECTION TABLE OF CONTENTS

DIVISION 02 - SITE WORK

SECTION 02921A

SEEDING

01/02

PART 1 GENERAL

1.1 REFERENCES
1.2 SUBMITTALS
1.3 DELIVERY, INSPECTION, STORAGE, AND HANDLING
1.3.1 Delivery
1.3.1.1 Soil Amendments
1.3.1.2 Pesticides
1.3.2 Inspection
1.3.3 Storage
1.3.4 Handling
1.3.5 Time Limitation

PART 2 PRODUCTS

2.1 Wood Fiber Mulch
2.2 SEED
2.2.1 Seed Classification
2.2.2 Permanent Seed Species and Mixtures
2.2.3 Quality
2.2.4 Seed Mixing
2.2.5 Substitutions
2.3 SOIL AMENDMENTS
2.3.1 Fertilizer
2.4 MULCH
2.4.1 Wood Cellulose Fiber
2.5 WATER
2.6 PESTICIDE

PART 3 EXECUTION

3.1 INSTALLING SEED TIME AND CONDITIONS
3.1.1 Seeding Time
3.1.2 Seeding Conditions
3.1.3 Equipment Calibration
3.1.4 Soil Test
3.2 SITE PREPARATION
3.2.1 Finished Grade
3.2.2 Application of Soil Amendments
3.2.2.1 Applying Fertilizer
3.2.3 Tillage and Scarification

3.2.4 Prepared Surface
3.2.4.1 Preparation
3.2.4.2 Field Area Debris
3.2.4.3 Protection
3.3 INSTALLATION
3.3.1 Installing Seed
3.3.2 Application Rates
3.4 SURFACE EROSION CONTROL
3.4.1 Surface Erosion Control
3.5 QUANTITY CHECK
3.6 APPLICATION OF PESTICIDE
3.6.1 Application
3.7 RESTORATION AND CLEAN UP
3.7.1 Restoration
3.7.2 Clean Up
3.8 PROTECTION OF INSTALLED AREAS
3.9 SEED ESTABLISHMENT PERIOD
3.9.1 Commencement
3.9.2 Satisfactory Stand of (Seeded) Plants
3.9.2.1 Field Area
3.9.3 Maintenance During Establishment Period
3.9.3.1 Weed Eradication
3.9.3.2 Post Seeding Fertilization
3.9.3.3 Pesticide Treatment
3.9.3.4 Repair or Reinstall
3.9.3.5 Maintenance Record

-- End of Section Table of Contents --

SECTION 02921A

SEEDING
01/02

PART 1 GENERAL

1.1 REFERENCES

The publications listed below form a part of this specification to the extent referenced. The publications are referred to in the text by basic designation only.

AMERICAN SOCIETY FOR TESTING AND MATERIALS (ASTM)

ASTM D 4972	(1995a) pH of Soils

U.S. DEPARTMENT OF AGRICULTURE (USDA)

AMS Seed Act	(1995) Federal Seed Act Regulations Part 201

1.2 SUBMITTALS

Government approval is required for submittals with a "G" designation; submittals not having a "G" designation are for information only. The following shall be submitted in accordance with Section 01330 SUBMITTAL PROCEDURES:

SD-03 Product Data

Quantity Check; G

Bag count or bulk weight measurements of material used compared with area covered to determine the application rate and quantity installed.

Maintenance Record; G

Maintenance work performed, area repaired or reinstalled, diagnosis for unsatisfactory stand of plants in seeded areas.

Application of Pesticide; G

Pesticide treatment plan with sequence of treatment work with dates and times. The pesticide trade name, EPA registration number, chemical composition, formulation, concentration of original and diluted material, application rate of active ingredients, method of application, area treated, amount applied; and the name and state license number of the state certified applicator shall be included.

SD-04 Samples

Wood Fiber Mulch; G

A 10 pound sample.

SD-06 Test Reports

Equipment Calibration; G

Certification of calibration tests conducted on the equipment used in the seeding operation.

Soil Test; G

Soil shall be tested as identified in Section 02930A EXTERIOR PLANTING. The Test Report and Recommendations provided by the Contractor shall include recommendations for fertilizer and/or other materials to be included with the slurry.

SD-07 Certificates

Seed; G

The certificate, signed by the seed provider, shall confirm that the seed provided complies with the requirements of these specifications and with applicable state and federal statures related to agricultural seed. The certificate shall indicate the botanical name, common name, percent pure live seed, minimum percent germination and hard seed, maximum percent weed seed content, and date tested.

Fertilizer; G

A copy of the manufacturer's guaranteed statement of analysis.

Mulch; G

A copy of the manufacturer's product data sheet.

Prior to the delivery of materials, certificates of compliance attesting that materials meet the specified requirements shall be submitted.

1.3 DELIVERY, INSPECTION, STORAGE, AND HANDLING

1.3.1 Delivery

A delivery schedule shall be provided at least 10 calendar days prior to the first day of delivery.

1.3.1.1 Soil Amendments

Soil amendments shall be delivered to the site in the original, unopened containers bearing the manufacturer's chemical analysis. In lieu of containers, soil amendments may be furnished in bulk. A chemical analysis shall be provided for bulk deliveries.

1.3.1.2 Pesticides

Pesticide material (if required) shall be delivered to the site in the original, unopened containers bearing legible labels indicating the EPA registration number and the manufacturer's registered uses.

1.3.2 Inspection

Seed shall be inspected upon arrival at the job site for conformity to species and quality. Seed that is wet, moldy, or bears a test date five months or older, shall be rejected. Other materials shall be inspected for compliance with specified requirements. The following shall be rejected: open soil amendment containers or wet soil amendments. Unacceptable materials shall be removed from the job site.

1.3.3 Storage

Materials shall be stored in designated areas. Seed and fertilizer shall be stored in cool, dry locations away from contaminants. Chemical treatment material shall be stored according to manufacturer's instructions and not with seeding operation materials.

1.3.4 Handling

Except for bulk deliveries, materials shall not be dropped or dumped from vehicles.

1.3.5 Time Limitation

time limitation for holding seed in the slurry shall be a maximum 24 hours.

PART 2 PRODUCTS

2.1 Wood Fiber Mulch
A 10 pound sample.

2.2 SEED

2.2.1 Seed Classification

State-certified seed of the latest season's crop shall be provided in original sealed packages bearing the producer's guaranteed analysis for percentages of mixture, purity, germination, hard seed, weed seed content, and inert material. Labels shall be in conformance with AMS Seed Act and applicable state seed laws.

2.2.2 Permanent Seed Species and Mixtures

Permanent seed species and mixtures shall be as noted on the project drawings. 2.2.3 Quality

Weed seed shall be a maximum 1 percent by weight of the total mixture.

2.2.4 Seed Mixing

The mixing of seed may be done by the seed supplier prior to delivery, or on site as directed.

2.2.5 Substitutions

Substitutions will not be allowed without written request and approval from the Contracting Officer.

2.3 SOIL AMENDMENTS

Soil amendments shall consist of fertilizer and other soil amendments as recommended by the Soil Test Report and Recommendations.

2.3.1 Fertilizer

The fertilizer analysis and rate shall be as per the Soil Test Report and Recommendations. Fertilizer shall be commercial grade, free flowing, uniform in composition, and consist of a nitrogen-phosphorus-potassium ratio.

2.4 MULCH

Mulch shall be free from weeds, mold, and other deleterious materials.

2.4.1 Wood Cellulose Fiber

Wood cellulose fiber shall not contain any growth or germination-inhibiting factors and shall be dyed an appropriate color to facilitate placement during application. Composition on air-dry weight basis: 9 to 15 percent moisture, pH range from 4.5 to 6.0.

2.5 WATER

Water shall be the responsibility of the Contractor, unless otherwise noted. Water shall not contain elements toxic to plant life.

2.6 PESTICIDE

Pesticides, if required, shall be insecticide, herbicide, fungicide, , rodenticide or miticide. For the purpose of this specification, a soil fumigant shall have the same requirements as a pesticide. The pesticide material shall be EPA registered and approved.

PART 3 EXECUTION

3.1 INSTALLING SEED TIME AND CONDITIONS

3.1.1 Seeding Time

Seed shall be installed in accordance with the project work schedule submitted by the Contractor and approved by the Contracting Officer. Seeding shall be performed after the planting and irrigation work have been completed and after fine grading and clean-up work have been completed within the area to be seeded.

3.1.2 Seeding Conditions

Seeding operations shall be performed only during periods when beneficial results can be obtained. When drought, excessive moisture, or other unsatisfactory conditions prevail, the work shall be stopped when directed by the Contracting Officer. When special conditions warrant a variance to the seeding operations, proposed alternate times shall be submitted for approval.

3.1.3 Equipment Calibration

Immediately prior to the commencement of seeding operations, calibration tests shall be conducted on the equipment to be used. These tests shall confirm that the equipment is operating within the manufacturer's specifications and will meet the specified criteria. The equipment shall be calibrated a minimum of once every day during the operation. The calibration test results shall be provided within 1 week of testing.

3.1.4 Soil Test

Soils within areas to be seeded shall be tested in accordance with SECTION 02930A - EXTERIOR PLANTING. The test shall determine the quantities and types of soil amendments required to meet local growing conditions for the seed species specified.

3.2 SITE PREPARATION

3.2.1 Finished Grade

The Contractor shall verify that finished grades are as indicated on drawings, and the fine grading and compaction requirements have been completed in accordance with applicable sections of these specifications, prior to the commencement of the seeding operation.

3.2.2 Application of Soil Amendments

3.2.2.1 Applying Fertilizer

Fertilizer shall be applied as recommended by the Soil Test Report and Recommendations. Fertilizer shall be incorporated into the seed, mulch, water slurry. Fertilizer shall be added to the mix immediately prior to slurry application.

3.2.3 Tillage and Scarification

Immediately prior to seeding, the area to be seeded shall be scarified to provide a soil surface that is has been loosened to a depth of

approximately one-half inch (1/2"). In areas, such as along project haul roads where soil has been compacted by by vehicular traffic, soil shall be tilled to a depth of four inches (4"). Tilling shall be performed using equipment that has been approved by the Contracting Officer. Tilled areas shall be fine graded prior to seeding. To minimize the potential for erosion, tilling shall be performed only in those areas identified by the Contacting Officer.

3.2.4 Prepared Surface

3.2.4.1 Preparation

New surfaces shall be blended to existing areas. The prepared surface shall be completed with a light raking to remove debris.

3.2.4.2 Field Area Debris

Debris and stones over a minimum 3 inch in any dimension shall be removed from the surface.

3.2.4.3 Protection

Areas with the prepared surface shall be protected from compaction or damage by vehicular or pedestrian traffic and surface erosion.

3.3 INSTALLATION

Prior to installing seed, any previously prepared surface compacted or damaged shall be reworked to meet the requirements of paragraph SITE PREPARATION. Seeding operations shall not take place when the wind velocity will prevent uniform seed distribution.

3.3.1 Installing Seed

Seeding method shall by hydroseeding. Seeding procedure shall ensure even coverage. Gravity feed applicators, which drop seed directly from a hopper onto the prepared soil, shall not be used because of the difficulty in achieving even coverage, unless otherwise approved. Absorbent polymer powder shall be mixed with the dry seed at the rate recommended by the manufacturer.

3.3.2 Application Rates

Seed shall be mixed to ensure distribution at the rate for each species in the seed mix as identified on the project drawings. Seed and fertilizer shall be added to water and thoroughly mixed to meet the rates specified. The time period for the seed to be held in the slurry shall be a maximum 24 hours. Wood cellulose fiber mulch shall be added at a rate of 2,000 pounds per acre. The seed, fertilizer, and water shall be thoroughly mixed to produce a homogeneous slurry. Slurry shall be uniformly applied under pressure over the entire area. The area shall not be rolled.

3.4 SURFACE EROSION CONTROL

3.4.1 Surface Erosion Control

The Contractor shall be responsible for repairing all erosion within the seeded areas during construction and during the initial maintenance period.

3.5 QUANTITY CHECK

For materials provided in bags, the empty bags shall be retained for recording the amount used. For materials provided in bulk, the weight certificates shall be retained as a record of the amount used. The amount of material used shall be compared with the total area covered to determine the rate of application used. Differences between the quantity applied and the quantity specified shall be adjusted as directed.

3.6 APPLICATION OF PESTICIDE

When application of a pesticide becomes necessary to remove a pest or disease, a pesticide treatment plan shall be submitted and coordinated with the Contracting Officer.

3.6.1 Application

A state certified / licensed applicator shall apply required pesticides in accordance with EPA label restrictions and recommendations. Clothing and personal protective equipment shall be used as specified on the pesticide label. A closed system is recommended as it prevents the pesticide from coming into contact with the applicator or other persons. Water for formulating shall only come from designated locations. Filling hoses shall be fitted with a backflow preventer meeting local plumbing codes or standards. Overflow shall be prevented during the filling operation. Prior to each day of use, the equipment used for applying pesticide shall be inspected for leaks, clogging, wear, or damage. Any repairs are to be performed immediately. A pesticide plan shall be submitted.

3.7 RESTORATION AND CLEAN UP

3.7.1 Restoration

Existing turf areas, pavements, and facilities that have been damaged from the seeding operation shall be restored to original condition at Contractor's expense.

3.7.2 Clean Up

Excess and waste material shall be removed from the seeded areas and shall be disposed offsite. Adjacent paved areas shall be cleaned.

3.8 PROTECTION OF INSTALLED AREAS

Immediately upon completion of the seeding operation in an area, the area shall be protected against traffic or other use by erecting barricades and providing signage as required, or as directed by the Contracting Officer.

3.9 SEED ESTABLISHMENT PERIOD

3.9.1 Commencement

The seed establishment period to obtain a healthy stand of grass plants shall begin on the first day of seeding work under this contract and shall continue through the remaining life of the contract. The seed establishment period shall be coordinated with Section 02930A EXTERIOR PLANTING.

3.9.2 Satisfactory Stand of (Seeded) Plants

3.9.2.1 Field Area

A satisfactory stand of plants from the seeding operation shall be an average of one plant of the specified species per square foot of area seeded. The total bare spots shall not exceed 5 percent of the total seeded area.

3.9.3 Maintenance During Establishment Period

3.9.3.1 Weed Eradication

Maintenance of the seeded areas shall include eradicating noxious weeds, insects and diseases; protecting embankments and ditches from surface erosion; maintaining erosion control materials and mulch; protecting installed areas from traffic; and post-seeding fertilization, as may be necessary.

3.9.3.2 Post Seeding Fertilization

The fertilizer shall be applied to areas, and the frequency, timing, and rate of application shall be as recommended by the Soil Test Report and Recommendations identified in Section 02930A- EXTERIOR PLANTING.

3.9.3.3 Pesticide Treatment

Treatment for diseases or pests shall be in accordance with paragraph APPLICATION OF PESTICIDE.

3.9.3.4 Repair or Reinstall

Unsatisfactory stands of plants and mulch shall be repaired or reinstalled, and eroded areas shall be repaired in accordance with paragraph SITE PREPARATION.

3.9.3.5 Maintenance Record

A record of each site visit shall be furnished, describing the maintenance work performed; areas repaired or reinstalled; and diagnosis for unsatisfactory stand of grass plants.

-- End of Section --

SECTION TABLE OF CONTENTS

DIVISION 02 - SITE WORK

SECTION 02930A

EXTERIOR PLANTING

01/02

PART 1 GENERAL

1.1 REFERENCES
1.2 SUBMITTALS
1.3 SOURCE INSPECTIONS
1.4 DELIVERY, INSPECTION, STORAGE, AND HANDLING
1.4.1 Delivery
1.4.1.1 Plant Material Identification
1.4.1.2 Protection During Delivery
1.4.1.3 Soil Amendments
1.4.1.4 Pesticide Material
1.4.2 Inspection
1.4.3 Storage
1.4.3.1 Plant Material Storage
1.4.3.2 Other Material Storage
1.4.4 Handling
1.4.5 Time Limitation
1.5 WARRANTY

PART 2 PRODUCTS

2.1 Horticultural Chemical Product Specification Sheets
2.2 Application of Pesticide
2.3 Soil Test Report and Recommendations
2.4 Gypsum
2.5 PLANT MATERIAL
2.5.1 Plant Material Classification
2.5.2 Plant Schedule
2.5.3 Substitutions
2.5.4 Quality
2.5.5 Growing Conditions
2.5.6 Method of Shipment to Maintain Health of Root System
2.5.6.1 Container-Grown (C) Plant Material
2.5.7 Growth of Trunk and Crown
2.5.7.1 Deciduous and Semi-Deciduous Trees
2.5.7.2 Deciduous and Non-Deciduous Shrubs
2.5.7.3 Poles
2.5.7.4 Cacti
2.5.7.5 Aquatic and Emergent Wetland marsh Plants
2.5.8 Plant Material Size
2.5.9 Plant Material Measurement

2.6 TOPSOIL
2.7 SOIL AMENDMENTS
2.7.1 Soil Sulfur
2.7.1.1 Gypsum: Gypsum shall be agricultural gypsum specifically manufactured for soil treatment. It shall be delivered to the site in the original, unopened containers bearing the manufacturer's guaranteed Statement of Analysis.
2.7.2 Fertilizer
2.7.3 Organic Soil Conditioner
2.7.4 Sand
2.8 WOOD STAKING MATERIAL
2.9 GUYING MATERIAL
2.9.1 Guying Material
2.10 [Enter Appropriate Subpart Title Here]
2.10.1 Chafing Guard
2.11 MYCORRHIZAL FUNGI INOCULUM
2.12 WATER
2.13 PESTICIDE

PART 3 EXECUTION

3.1 INSTALLING PLANT MATERIAL TIME AND CONDITIONS
3.1.1 Plant Material Installation
3.2 SITE PREPARATION
3.2.1 Finished Grade, Topsoil and Underground Utilities
3.2.2 Layout
3.2.3 Protecting Existing Vegetation
3.3 EXCAVATION
3.3.1 Obstructions Below Ground
3.3.2 Turf Removal
3.3.3 Plant Pits
3.4 INSTALLATION
3.4.1 Setting Plant Material
3.4.2 Adding Mycorrhizal Fungi Inoculum
3.4.3 Backfill Procedure
3.4.3.1 Container-Grown Plant Material
3.4.3.2 Earth Berm
3.4.4 Irrigation
3.5 FINISHING
3.5.1 Pruning
3.6 MAINTENANCE DURING PLANTING OPERATION
3.7 APPLICATION OF PESTICIDE(S)
3.7.1 Application
3.8 RESTORATION AND CLEAN UP
3.8.1 Restoration
3.8.2 Clean Up
3.9 PLANT ESTABLISHMENT PERIOD (INITIAL MAINTEANCE PERIOD)
3.9.1 Commencement
3.9.2 Maintenance During Establishment Period
3.9.2.1 Irrigation of Plant Material
3.9.2.2 Weeding
3.9.2.3 Pesticide Treatment
3.9.2.4 Fertilization During the Initial Maintenance Period
3.9.2.5 Plant Pit Settling

3.9.2.6 Maintenance Record
3.9.3 Unhealthy Plant Material
3.9.4 Replacement Plant Material
3.9.5 Maintenance Instructions

-- End of Section Table of Contents --

SECTION 02930A

EXTERIOR PLANTING
01/02

PART 1 GENERAL

1.1 REFERENCES

The publications listed below form a part of this specification to the extent referenced. The publications are referred to in the text by basic designation only.

AMERICAN NATIONAL STANDARDS INSTITUTE (ANSI)

ANSI A300	(1995) Tree Care Operations - Trees, Shrubs and Other Woody Plant Maintenance

AMERICAN NURSERY AND LANDSCAPE ASSOCIATION (ANLA)

ANLA Z60.1	(1996) Nursery Stock

AMERICAN SOCIETY FOR TESTING AND MATERIALS (ASTM)

ASTM C 602	(1995a) Agricultural Liming Materials
ASTM D 4972	(1995a) pH of Soils
ASTM D 5034	(1995) Breaking Strength and Elongation of Textile Fabrics (Grab Test)
ASTM D 5035	(1995) Breaking Force and Elongation of Textile Fabrics (Strip Method)
ASTM D 5268	(1992; R 1996) Topsoil Used for Landscaping Purposes
ASTM D 5883	(1996el) Use of Rotary Kiln Produced Expanded Shale, Clay or Slate (ESCS) as a Mineral Amendment in Topsoil Used for Landscaping and Related Purposes

ARIZONA NURSERY ASSOCIATION (ANA)

ANA -	Growers Committee Recommended Tree Specifications

1.2 SUBMITTALS

Government approval is required for submittals with a "G" designation;

submittals not having a "G" designation are for information only. The following shall be submitted in accordance with Section 01330 SUBMITTAL PROCEDURES:

SD-03 Product Data

Horticultural Chemical Product Specification Sheets; G

Manufacturer's literature including physical characteristics for the following soil amendments:
Soil Sulfur
Gypsum
Organic Soil Conditioner
Fertilizer

Maintenance Record; G

Maintenance work performed, quantity of plant losses, and replacements; and diagnosis of unhealthy plant material. Maintenance record reports shall be submitted monthly. Submittals shall be made by the fifth day of each month describing the maintenance activities completed during the previous month.

Application of Pesticide; G

Pesticide treatment plan with sequence of treatment work with dates and times. The pesticide trade name, EPA registration number, chemical composition, formulation, concentration of original and diluted material, application rate of active ingredients, method of application, area treated, amount applied; and the name and state license number of the state certified applicator shall be included.

SD-06 Test Reports

Soil Test Report and Recommendations; G

The on-site soil shall be tested for its physical and horticultural properties. A total of eight (8) soil samples shall be taken from areas of the site where new planting will occur. Four (4) samples shall be taken from the area north of Curry Road and four (4) samples shall be taken from the area south of Curry Road. The samples shall be analyzed by an agricultural soils testing laboratory acceptable to the Contracting Officer. The following properties shall be identified:

Soil Texture Classification / Gradation
pH
Organic Matter
Soluble Salts (ppm)
Calcium Carbonates (%)
Exchangeable Sodium (% and ppm)
Phosphorus (ppm)

Potassium (ppm)
Magnesium (ppm)
Calcium (ppm)
Sodium (ppm)
Nitrogen (ppm)
Zinc (ppm)
Manganese (ppm)
Iron (ppm)
Copper (ppm)
Boron (ppm)

The results of the tests shall be reviewed by a qualified agronomist, horticulturist, and/or soil scientist who shall make recommendations related to amendments to be included with the soil used to backfill the plant pits. If these recommendations include the deletion of soil amendments specified herein or a reduction in the specified application rate, the basis of these recommended deletions or reductions shall be clearly stated. The recommendations may also include the addition of other soil amendments or increases in the application rate for the specified soil amendments. The recommendations shall be reviewed, and if found to be acceptable, approved by the Contracting Officer. All soil preparation and planting work shall be performed in accordance with the approved Soil Test Report and Recommendations.

SD-07 Certificates

Plant Material; G

The certificate, signed by the plant supplier, shall indicate that the plants are of the species and variety specified and meet the requirements of the project specifications.

Fertilizer; G

A copy of the manufacturer's guaranteed Statement of Analysis.

Organic Soil Conditioner;G

The certificate, signed by the material supplier, shall indicate that the material meets the requirements of the project specifications.

Gypsum; G
A copy of the manufacturer's guaranteed Statement of Analysis

Soil Sulfur; G
A copy of the manufacturer's guaranteed Statement of Analysis

SD-10 Operation and Maintenance Data

Maintenance Instructions; G

Instruction for year-round care of installed plant material.

1.3 SOURCE INSPECTIONS

The nursery or source of plant material shall be subject to inspection.

1.4 DELIVERY, INSPECTION, STORAGE, AND HANDLING

1.4.1 Delivery

A delivery schedule shall be provided at least 10 calendar days prior to the first day of plant material delivery.

1.4.1.1 Plant Material Identification

Plant material shall be identified with attached, durable, waterproof labels and weather-resistant ink, stating the correct botanical plant name and size.

1.4.1.2 Protection During Delivery

Plant material shall be protected during delivery to prevent desiccation and damage to the branches, trunk, root system, or earth ball. Branches shall be protected by tying-in, as-appropriate for the subject species. Exposed branches shall be covered during transport.

1.4.1.3 Soil Amendments

Soil amendments shall be delivered to the site in the original, unopened containers bearing the manufacturer's chemical analysis. In lieu of containers, soil amendments may be furnished in bulk. A chemical analysis shall be provided for bulk deliveries.

1.4.1.4 Pesticide Material

Pesticide material shall be delivered to the site in the original, unopened containers bearing legible labels indicating the Environmental Protection Agency (EPA) registration number and the manufacturer's registered uses.

1.4.2 Inspection

Plant material shall be well shaped, vigorous, and healthy with a well branched root system, free from disease, harmful insects and insect eggs, sun-scald injury, disfigurement or abrasion. Plant material shall be checked for unauthorized substitution and to establish nursery grown status. Plant material showing desiccation, abrasion, sun-scald injury, disfigurement, or unauthorized substitution shall be rejected. The plant material shall exhibit typical form of branch to height ratio; and meet the caliper and height measurements specified. Plant material that measures less than specified, or has been poled, topped off or headed back, shall be rejected. Container-grown plant material shall show new fibrous roots and the root mass shall contain its shape when removed from the container. Plant material with broken or cracked balls; or broken containers shall be rejected. Other materials shall be inspected for compliance with paragraph PRODUCTS. Open soil amendment containers or wet soil amendments shall be

rejected. Unacceptable material shall be removed from the job site.

1.4.3 Storage

1.4.3.1 Plant Material Storage

Plant material not installed on the day of arrival at the site shall be stored and protected in approved plant storage areas. Plant material shall not be stored on-site for periods longer than 21 days. Plant material shall be protected from direct exposure to wind and sun. All plant material shall be kept in a moist condition by watering as appropriate for the individual plant species.

1.4.3.2 Other Material Storage

Storage of other material shall be in designated areas. Soil amendments shall be stored in dry locations and away from contaminants. Chemical treatment material shall be stored according to manufacturer's instructions and not with planting operation material.

1.4.4 Handling

Plant material shall not be injured in handling. Cracking or breaking the plant root ball shall be avoided. Plant material shall not be handled by the trunk or stems. Materials shall not be dropped from vehicles.

1.4.5 Time Limitation

All plant materials installed shall be irrigated immediately following installation. Planting work shall not begin in any given project area until the irrigation system in that area has been made fully operational.

1.5 WARRANTY

Furnished plant material shall have a warranty for plant growth to be in a vigorous growing condition for a minimum 12 month period following final acceptance of the work. This warranty shall apply to all plants except for those that die or become damaged as a result of vandalism, Acts-of-God, or improper maintenance, as determined by the Contracting Officer. When plant material is determined to be unhealthy in accordance with paragraph PLANT ESTABLISHMENT PERIOD, it shall be replaced once under this warranty. Replacement work shall be performed within 10 calendar days of the Contractor's receipt of written notice.

PART 2 PRODUCTS

2.1 Horticultural Chemical Product Specification Sheets

Manufacturer's literature including physical characteristics for the following soil amendments:

- Soil Sulfur
- Gypsum
- Organic Soil Conditioner
- Fertilizer

2.2 Application of Pesticide

Pesticide treatment plan with sequence of treatment work with dates and times. The pesticide trade name, EPA registration number, chemical composition, formulation, concentration of original and diluted material, application rate of active ingredients, method of application, area treated, amount applied; and the name and state license number of the state certified applicator shall be included.

2.3 Soil Test Report and Recommendations

The on-site soil shall be tested for its physical and horticultural properties. A total of eight (8) soil samples shall be taken from areas of the site where new planting will occur. Four (4) samples shall be taken from the area north of Curry Road and four (4) samples shall be taken from the area south of Curry Road. The samples shall be analyzed by an agricultural soils testing laboratory acceptable to the Contracting Officer. The following properties shall be identified:

Soil Texture Classification / Gradation
pH
Organic Matter
Soluble Salts (ppm)
Calcium Carbonates (%)
Exchangeable Sodium (% and ppm)
Phosphorus (ppm)
Potassium (ppm)
Magnesium (ppm)
Calcium (ppm)
Sodium (ppm)
Nitrogen (ppm)
Zinc (ppm)
Manganese (ppm)
Iron (ppm)
Copper (ppm)
Boron (ppm)

The results of the tests shall be reviewed by a qualified agronomist, horticulturist, and/or soil scientist who shall make recommendations related to amendments to be included with the soil used to backfill the plant pits. If these recommendations include the deletion of soil amendments specified herein or a reduction in the specified application rate, the basis of these recommended deletions or reductions shall be clearly stated. The recommendations may also include the addition of other soil amendments or increases in the application rate for the specified soil amendments. The recommendations shall be reviewed, and if found to be acceptable, approved by the Contracting Officer. All soil preparation and planting work shall be performed in accordance with the approved Soil Test Report and Recommendations.

2.4 Gypsum

A copy of the manufacturer's guaranteed Statement of Analysis

2.5 PLANT MATERIAL

2.5.1 Plant Material Classification

The plant material shall be nursery grown stock conforming to ANLA Z60.1 and shall be the species, size, and variety specified.

2.5.2 Plant Schedule

The plant schedule shall provide botanical names as included in one or more of the publications listed under "Nomenclature" in ANLA Z60.1.

2.5.3 Substitutions

Substitutions will not be permitted without written request and approval from the Contracting Officer.

2.5.4 Quality

Well shaped, well grown, vigorous plant material having healthy and well branched root systems in accordance with ANLA Z60.1 shall be provided. Plant material shall be provided free from disease, harmful insects and insect eggs, sun-scald injury, disfigurement and abrasion. Plant material shall be free of shock or damage to branches, trunk, or root systems, which may occur from the digging and preparation for shipment, method of shipment, or shipment. Plant quality is determined by the growing conditions; method of shipment to maintain health of the root system; and growth of the trunk and crown as follows.

2.5.5 Growing Conditions

Plant material shall be native to or well-suited to the growing conditions of the project site. Plant material shall be grown under climatic conditions similar to those at the project site.

2.5.6 Method of Shipment to Maintain Health of Root System

2.5.6.1 Container-Grown (C) Plant Material

Container size shall be in accordance with ANLA Z60.1. Plant material shall be grown in a container over a duration of time for new fibrous roots to have developed and for the root mass to retain its shape and hold together when removed from the container. Container-grown plant material shall be inoculated with mycorrhizal fungi during germination in the nursery. Before shipment the root system shall be treated with mycorrhizal fungi inoculum. The container shall be sufficiently rigid to hold ball shape and protect root mass during shipping.

2.5.7 Growth of Trunk and Crown

2.5.7.1 Deciduous and Semi-Deciduous Trees

A height to caliper relationship shall be provided in accordance with ANLA

Z60.1. Height of branching shall bear a relationship to the size and species of tree specified and with the crown in good balance with the trunk. The trees shall not be "poled" or the leader removed.

a. Single stem: The trunk shall be reasonably straight and symmetrical with crown and have a persistent main leader.

b. Multi-stem: All countable stems, in aggregate, shall average the size specified. To be considered a stem, there shall be no division of the trunk which branches more than 6 inches from ground level.

c. Specimen: The tree provided shall be well branched and pruned naturally according to the species.

2.5.7.2 Deciduous and Non-Deciduous Shrubs

Deciduous and Non-Deciduous shrubs shall have the height and number of primary stems recommended by ANLA Z60.1. Acceptable plant material shall be well shaped, with sufficient well-spaced side branches, and recognized by the trade as typical for the species grown in the region of the project.

2.5.7.3 Poles

Poles shall be of the species noted on the project drawings and shall be obtained from local sources. Sources shall be as approved by the Contracting Officer. Poles shall be of the length and diameter (caliper) detailed. The time between the harvesting of poles and the installation of the poles shall be as required to ensure viability.

2.5.7.4 Cacti

Cacti shall be of the species and varieties indicated on the project drawings. Cacti shall be container grown. Plants shall be grown in containers for a sufficient period of time to provide for a well developed root system. Bare root cactus cuttings shall not be used except as may be approved by the Contracting Officer.

2.5.7.5 Aquatic and Emergent Wetland marsh Plants

Plants shall be collected or nursery grown specimens of the species and variety noted on the project plans. Plants shall have well developed root systems and shall be transported to the site with the root system and associated soil in an appropriately size container. Plants shall be delivered to the site in a manner that prevents desiccation of the plant and/or root system. Except as approved by the Contracting Officer, the plants shall be installed within 24 hours of delivery to the project site. If not planted within 24 hours, an aquatic / emergent plant holding nursery shall be provided by the Contractor. The nursery shall be subject to the Contracting Officer's review and approval.

2.5.8 Plant Material Size

Plant material shall be furnished in container sizes indicated. Plant sizes shall meet the minimum requirements of the Arizona Nursery Association Growers Committee Recommended Tree Specifications, as applicable. Plant material larger in size than specified may be provided at no additional cost to the Government.

2.5.9 Plant Material Measurement

Plant material measurements shall be in accordance with ANLA Z60.1.

2.6 TOPSOIL

Topsoil used in the preparation of backfill for plant pits shall be native, on-site soil with soil amendments added as specified herein or as recommended by the approved Soil Test Report and Recommendations. When additional topsoil is required beyond the available topsoil from on-site sources, the imported topsoil shall be delivered and amended as recommended by the Soil Test Report and Recommendations. Topsoil shall be screened, if necessary, to remove slag, cinders, stones larger than 2" diameter, lumps of soil, sticks, roots, trash or other deleterious material. Topsoil shall be free from viable plants and plant parts.

2.7 SOIL AMENDMENTS

Soil amendments and rates shall consist of the following:

Organic Soil Conditioner: Seven (7) cubic feet per cubic yard of topsoil (native, on-site soil)

Soil Sulfur: Two (2) pounds of soil sulfur per cubic yard of topsoil (native, on-site soil)

Gypsum: One (1)pound per cubic yards of topsoil (native, on-site soil)

Fertilizer (16-20-0): One (1) pound of fertilizer per cubic yard of topsoil (native, on-site soil)

The soil amendments shall be thoroughly blended with the topsoil (native, on-site soil) prior to placement in the plant pits.

2.7.1 Soil Sulfur

Soil sulfur shall be agricultural sulfur manufactured for soil treatment. It shall be grained or pelleted containing a minimum of 90% sulfur and 10% (maximum) inert ingredients. It shall be delivered to the site in the original, unopened containers bearing the manufacturer's guaranteed Statement of Analysis. 2.7.1.1 Gypsum:

Gypsum shall be agricultural gypsum specifically manufactured for soil treatment. It shall be delivered to the site in the original, unopened containers bearing the manufacturer's guaranteed Statement of Analysis.

2.7.2 Fertilizer

The nutrients ratio of the fertilizer shall be 16 percent nitrogen, 20

percent phosphorus, and 0 percent potassium, or as recommended by the Soil Test Report and Recommendations. Fertilizer shall be commercial grade; free flowing, pellet form; uniform in composition; and consist of a nitrogen-phosphorus-potassium ratio.

2.7.3 Organic Soil Conditioner

The organic soil conditioner shall consist of composed, ground, or shredded fir or ponderosa pine bark shavings with at least 85% able to pass through a 1/4 inch screen. The pH of the organic soil conditioner shall not exceed 7.5. It shall be hygroscopic or shall contain a wetting agent. It shall be Nitrogen stabilized with a 0.5% Nitrogen content.

2.7.4 Sand

Sand (if required as a soil amendment by the Soil test Report and Recommendations)shall be clean and free of toxic materials. Gradation: A minimum 95 percent by weight shall pass a No. 10 sieve and a minimum 10 percent by weight shall pass a No. 16 sieve.

2.8 WOOD STAKING MATERIAL

Wood stakes shall be hardwood, fir, or pine; rough sawn or peeled; free from knots, rot, cross grain, or other defects that would impair their strength. Length and diameter of stakes shall be as noted on the project drawings. Except as may be directed by the Contracting Officer, only those trees planting in the vicinity of the parking lot or adjacent to the project multi-use path shall be staked.

2.9 GUYING MATERIAL

2.9.1 Guying Material

Metal guying material shall be a minimum 12 gauge. annealed, galvanized steel wire.

2.10 [Enter Appropriate Subpart Title Here]2.10.1 Chafing Guard

Plastic chafing guards shall be used to protect tree trunks and branches when metal is used as guying material. Chaffing guards shall be fiber reinforced rubber hose with a inside diameter of 3/4", minimum. The length of the chaffing guards shall be twelve inches (12")minimum, or as required to protect the bark of the tree.

2.11 MYCORRHIZAL FUNGI INOCULUM

Mycorrhizal fungi inoculum shall be composed of multiple-fungus inoculum as recommended by the manufacturer for the plant material specified.

2.12 WATER

Unless otherwise directed by the Contracting Officer, all water used for irrigation shall be from the designated on-site water supply being constructed / installed by others.

2.13 PESTICIDE

Pesticide shall be insecticide, herbicide, fungicide, nematocide, rodenticide or miticide. For the purpose of this specification a soil fumigant shall have the same requirements as a pesticide. The pesticide material shall be EPA registered and approved.

PART 3 EXECUTION

3.1 INSTALLING PLANT MATERIAL TIME AND CONDITIONS

3.1.1 Plant Material Installation

Plant material may be installed at any time selected by the Contractor that is consistent with the overall project schedule prepared by the Contractor and consistent with the overall project completion schedule. Plants that are installed during hot, windy, cold, or other adverse conditions, shall be installed at the Contractor's risk. Plants which die or become damaged as a result of conditions at the time planting shall be replaced with healthy, undamaged plants prior to acceptance of the work.

3.2 SITE PREPARATION

3.2.1 Finished Grade, Topsoil and Underground Utilities

The Contractor shall verify that finished grades are as indicated on drawings, and that the placing of topsoil, the fine grading, and the compaction requirements have been completed in accordance with applicable sections of these specifications prior to the commencement of the planting operation. The location of underground utilities and facilities in the area of the planting operation shall be verified by the Contractor. Damage to underground utilities and facilities shall be repaired at the Contractor's expense.

3.2.2 Layout

Plant material locations and bed outlines shall be staked on the project site before any excavation is made. Plant material locations may be adjusted, as directed or approved by the Contracting Officer, to meet field conditions.

3.2.3 Protecting Existing Vegetation

When there are established lawns in the planting or construction area, the turf shall be covered and/or protected during planting or construction operations. Existing trees, shrubs, and plant beds that are to be preserved shall be barricaded along the drip line to protect them during planting operations.

3.3 EXCAVATION

3.3.1 Obstructions Below Ground

When obstructions below ground affect the work, adjustments to plant material location(s) shall be staked in the field for the Contracting Officer's review and approval.

3.3.2 Turf Removal

Where new / project planting operations occur in an area of existing turf area, or in an area where turf has been removed by others, the remaining turf, if any, shall be removed from the excavation area to a depth that will ensure the removal of the entire root system.

3.3.3 Plant Pits

Plant pits for container plant material shall be dug to a depth detailed on the project plans. The pit shall be constructed to the configuration detailed. In all areas where the excavation has created a hard or glazed surface at the perimeter of the plant pit, the glazed or hard soil surface shall be thoroughly scarified to facilitate root penetration into the surrounding soil.

3.4 INSTALLATION

3.4.1 Setting Plant Material

Prior to the setting of plants in the plant pits, the prepared backfill material shall be placed in the bottom of the pit to the depth detailed on the project plans. This soil shall be wetted and thoroughly tamped to minimize or eliminate settlement of the plant rootball after installation. The plant material shall be set plumb and held in position until sufficient soil has been firmly placed around root system or ball. In relation to the surrounding grade, the plant material shall be set even with the grade at which it was grown, or as detailed on the project plans.

3.4.2 Adding Mycorrhizal Fungi Inoculum

Mycorrhizal fungi inoculum shall be added as recommended by the manufacturer for the plant material specified.

3.4.3 Backfill Procedure

Additional requirements are as follows.

3.4.3.1 Container-Grown Plant Material

The plant material shall be carefully removed from containers that are not biodegradeable. Backfill mixture shall be added to the plant pit in 6 inch layers with each layer tamped.

3.4.3.2 Earth Berm

An earth berm, consisting of backfill soil mixture, shall be formed around the edge of the plant pit (if so detailed on the project plans) to aid in water retention.

3.4.4 Irrigation

Plant pits shall be thoroughly irrigated immediately after backfilling. the Plant rootballs shall be kept thoroughly irrigated during construction and through the end of the Initial Maintenance Period. 3.5 FINISHING

3.5.1 Pruning

Pruning shall be accomplished by trained and experienced personnel. The pruning of trees and palms shall be in accordance with ANSI A300. Only dead or broken material shall be pruned from installed plants. The typical growth habit of individual plant material shall be retained. Clean cuts shall be made flush with the parent trunk. Improper cuts, stubs, dead and broken branches shall be removed. "Headback" cuts at right angles to the line of growth will not be permitted. Trees shall not be poled or the leader removed, nor shall the leader be pruned or "topped off".

3.6 MAINTENANCE DURING PLANTING OPERATION

Installed plant material shall be maintained in a healthy growing condition. Maintenance operations shall begin immediately after each plant is installed to prevent desiccation and shall continue until the plant establishment period commences. Installed areas shall be kept free of noxious weeds, grass, and other undesired vegetation. Maintenance activities shall include; pruning, irrigation, routine inspection by qualified personnel, and the as-needed application of horticultural chemicals.

3.7 APPLICATION OF PESTICIDE(S)

When application of a pesticide becomes necessary to remove a pest or disease, a pesticide treatment plan shall be submitted to the Contracting Officer for review and approval.

3.7.1 Application

A state certified / licensed applicator shall apply required pesticides in accordance with EPA label restrictions and recommendations. Clothing and personal protective equipment shall be used as specified on the pesticide label. A closed system is recommended as it prevents the pesticide from coming into contact with the applicator or other persons. Water for formulating shall only come from designated locations. Filling hoses shall be fitted with a backflow preventer meeting local plumbing codes or standards. Overflow shall be prevented during the filling operation. Prior to each day of use, the equipment used for applying pesticide shall be inspected for leaks, clogging, wear, or damage. Any repairs are to be performed immediately.

3.8 RESTORATION AND CLEAN UP

3.8.1 Restoration

Turf areas, pavements and facilities that have been damaged from the planting operation shall be restored to original condition at the Contractor's expense.

3.8.2 Clean Up

Excess and waste material shall be removed from the installed area and

shall be disposed offsite. Adjacent paved areas shall be cleared.

3.9 PLANT ESTABLISHMENT PERIOD (INITIAL MAINTEANCE PERIOD)

3.9.1 Commencement

The plant establishment period for maintaining exterior plantings in a healthy growing condition shall commence on the first day following the initial acceptance of the planting work and shall continue for a period of 180 consecutive calendar days. The plant establishment period shall be coordinated with Section 02921A SEEDING. The plant establishment period shall be modified for inclement weather shut down periods, or for separate completion dates for areas. If the Contractor fails to maintain the project during the initial maintenance period, as specified herein, the days being credited to the maintenance period will be suspended and will remain suspended until such time as the the deficiencies have been corrected to the satisfaction of the Contracting Officer.

3.9.2 Maintenance During Establishment Period

Maintenance of plant material shall include straightening plant material, straightening stakes; tightening guying material; correcting girdling; supplementing mulch; pruning dead or broken branch tips; repairing erosion in planted or other project areas; the application of irrigation water; eradicating weeds, insects and disease; periodic fertilization; and removing and replacing unhealthy plants.

3.9.2.1 Irrigation of Plant Material

The plant material shall be irrigated as necessary to prevent stress and as needed to promote healthy growth. Irrigation application rates shall be as recommended by the Contractor and as approved by the Contracting Officer.

3.9.2.2 Weeding

Turf grass and noxious weeds within the planted areas shall not be allowed to become established before being completely removed, including the root system.

3.9.2.3 Pesticide Treatment

Treatment for disease or pest shall be in accordance with paragraph APPLICATION OF PESTICIDE.

3.9.2.4 Fertilization During the Initial Maintenance Period

The plant material shall be fertilized during the initial maintenance period as recommended by the Soil Test Report and Recommendations. Application rates, fertilizer types, and methods of application shall be as recommended in the subject report.

3.9.2.5 Plant Pit Settling

When minor settling occurs to the backfill soil mixture, additional

backfill soil shall be added to the plant pit until the backfill level is equal to the surrounding grade. Excessive settling, as determined by the Contracting Officer, that affects the setting of the plant in relation to the maximum depth at which it was grown requires replanting in accordance with paragraph INSTALLATION.

3.9.2.6 Maintenance Record

A record shall be furnished describing the maintenance work performed, the quantity of plant losses, diagnosis of the plant loss, and the quantity of replacements made during each month of the initial maintenance period.

3.9.3 Unhealthy Plant Material

A tree shall be considered unhealthy or dead when the main leader has died back, or up to a maximum 25 percent of the crown has died. A shrub shall be considered unhealthy or dead when up to a maximum 25 percent of the plant has died. This condition shall be determined by scraping on a branch an area 1/16 inch square, maximum, to determine if there is a green cambium layer below the bark. The Contractor shall determine the cause for unhealthy plant material and shall provide recommendations for replacement. Unhealthy or dead plant material shall be removed immediately and shall be replaced as soon as seasonal conditions permit. Plants which die or are found to be unhealthy during the construction or during the initial maintenance period (for reasons other than vandalism or Acts-of-God, as determined by the Contracting Officer)shall be replaced by the Contractor at no additional cost to the government.

3.9.4 Replacement Plant Material

Unless otherwise directed, plant material shall be provided for replacement in accordance with paragraph PLANT MATERIAL. Replacement plant material shall be installed in accordance with paragraph INSTALLATION, and recommendations in paragraph PLANT ESTABLISHMENT PERIOD. Plant material shall be replaced in accordance with paragraph WARRANTY. An extended plant establishment period shall not be required for replacement plant material.

3.9.5 Maintenance Instructions

Written instructions shall be furnished containing drawings and other necessary information for year-round care of the installed plant material; including, when and where maintenance should occur, and the procedures for plant material replacement,.

-- End of Section --

SECTION TABLE OF CONTENTS

DIVISION 03 - CONCRETE

SECTION 03201

STEEL BARS AND WELDED WIRE FABRIC FOR CONCRETE REINFORCEMENT FOR CIVIL WORKS

09/02

PART 1 GENERAL

1.1 REFERENCES
1.2 SUBMITTALS
1.3 DESCRIPTION
1.3.1 Work Covered by this Specification Section

PART 2 PRODUCTS

2.1 MATERIALS
2.1.1 Steel Bars
2.1.2 Steel Welded Wire Fabric
2.1.3 Accessories
2.1.3.1 Bar Supports
2.1.3.2 Wire Ties

PART 3 EXECUTION

3.1 FABRICATION AND PLACEMENT
3.1.1 Hooks and Bends
3.1.2 Welding
3.1.3 Placing Tolerances
3.1.3.1 Spacing
3.1.3.2 Concrete Cover
3.1.4 Splicing
3.1.4.1 Lap Splices

-- End of Section Table of Contents --

SECTION 03201

STEEL BARS AND WELDED WIRE FABRIC FOR CONCRETE REINFORCEMENT FOR CIVIL WORKS

09/02

PART 1 GENERAL

1.1 REFERENCES

The publications listed below form a part of this specification to the extent referenced. The publications are referred to in the text by basic designation only.

ACI INTERNATIONAL (ACI)

ACI 315	(1999) Details and Detailing of Concrete Reinforcement
ACI 318/318R	(1999) Building Code Requirements for Structural Concrete and Commentary
ACI 318M	(1995) Metric Building Code Requirements for Structural Concrete and Commentary

AMERICAN SOCIETY FOR TESTING AND MATERIALS (ASTM)

ASTM A 184/A 184M	(1996) Fabricated Deformed Steel Bar Mats for Concrete Reinforcement
ASTM A 185	(1997) Steel Welded Wire Fabric, Plain, for Concrete Reinforcement
ASTM A 370	(1997a) Mechanical Testing of Steel Products
ASTM A 497	(1999) Steel Welded Wire Fabric, Deformed, for Concrete Reinforcement
ASTM A 615/A 615M	(2000) Deformed and Plain Billet-Steel Bars for Concrete Reinforcement
ASTM A 616/A 616M	(1996a) Rail-Steel Deformed and Plain Bars for Concrete Reinforcement
ASTM A 617/A 617M	(1996a) Axle-Steel Deformed and Plain Bars for Concrete Reinforcement
ASTM A 706/A 706M	(2000) Low-Alloy Steel Deformed and Plain Bars for Concrete Reinforcement

ASTM A 767/A 767M	(2000) Zinc-Coated (Galvanized) Steel Bars for Concrete Reinforcement
ASTM E 94	(2000) Radiographic Testing

AMERICAN WELDING SOCIETY (AWS)

AWS D1.4	(1998) Structural Welding Code - Reinforcing Steel

1.2 SUBMITTALS

Government approval is required for submittals with a "G" designation; submittals not having a "G" designation are for information only. The following shall be submitted in accordance with Section 01330 SUBMITTAL PROCEDURES:

SD-02 Shop Drawings

Fabrication and Placement; G

The Contractor shall submit shop drawings which include: reinforcement steel placement drawings; reinforcement steel schedules showing quantity, size, shape, dimensions, weight per foot, total weights and bending details; and details of bar supports showing types, sizes, spacing and sequence.

SD-07 Certificates

Steel Bars and Welded-Wire Fabric;

Written certification that the steel bars (and welded-wire fabric, if required) comply with the provisions of this specification.

1.3 DESCRIPTION

1.3.1 Work Covered by this Specification Section

This section covers all steel reinforcement used in the construction of portland cement concrete wall footings, sidewalks, multi-use paths, cart paths, and other concrete pavements. Reinforcing steel shall be incorporated into the work as detailed on the drawings.

PART 2 PRODUCTS

2.1 MATERIALS

Steel Bars and Welded-Wire Fabric;

Written certification that the steel bars (and welded-wire fabric, if required) comply with the provisions of this specification.

Materials shall conform to the following requirements.

2.1.1 Steel Bars

Steel bars shall comply with the requirements of ASTM A 615/A 615M or ASTM A 706/A 706M, deformed, of the grades, sizes and lengths shown. If the Grade 40 bars shown are unavailable the Contractor may substitute Grade 50 or Grade 60 bars of the same size and spacing as indicated for Grade 40 bars when authorized.

2.1.2 Steel Welded Wire Fabric

Steel welded wire fabric shall comply with the requirements of ASTM A 185, wire sizes and spacings as shown.

2.1.3 Accessories

2.1.3.1 Bar Supports

Bar supports shall comply with the requirements of ACI 315. Supports for bars in concrete with formed surfaces exposed to view or to be painted shall be plastic-coated wire, stainless steel or precast concrete supports.

2.1.3.2 Wire Ties

Wire ties shall be 16 gauge or heavier black annealed wire.

PART 3 EXECUTION

3.1 FABRICATION AND PLACEMENT

Reinforcement steel and accessories shall be fabricated and placed as specified and shown on the drawings or a shown on the approved shop drawings. Fabrication and placement details of steel and accessories not specified or shown shall be in accordance with ACI 315 and ACI 318/318R or as directed. Steel shall be fabricated to shapes and dimensions shown, placed where indicated within specified tolerances and adequately supported during concrete placement. At the time of concrete placement all steel shall be free from loose, flaky rust, scale (except tight mill scale), mud, oil, grease or any other coating that might reduce the bond with the concrete.

3.1.1 Hooks and Bends

Steel bars shall be mill or field-bent. All steel shall be bent cold unless authorized. No steel bars shall be bent after being partially embedded in concrete unless indicated or authorized.

3.1.2 Welding

Welding of steel bars will be permitted only where indicated or authorized. Welding shall be performed in accordance with AWS D1.4 except where

otherwise specified or indicated.

3.1.3 Placing Tolerances

3.1.3.1 Spacing

The spacing between adjacent bars and the distance between layers of bars may not vary from the indicated position by more than one bar diameter nor more than 1 inch.

3.1.3.2 Concrete Cover

The minimum concrete cover of main reinforcement steel bars shall be as shown. The allowable variation for minimum cover shall be as follows:

MINIMUM COVER	VARIATION
6 inch	plus 1/2 inch
4 inch	plus 3/8 inch
3 inch	plus 3/8 inch
2 inch	plus 1/4 inch
1-1/2 inch	plus 1/4 inch
1 inch	plus 1/8 inch
3/4 inch	plus 1/8 inch

3.1.4 Splicing

Splices in steel bars shall be made only as required. Bars may be spliced at alternate or additional locations at no additional cost to the Government subject to approval.

3.1.4.1 Lap Splices

Lap splices shall be used only for bars smaller than size 14 and welded wire fabric. Lapped bars may be placed in contact and securely tied or spaced transversely apart to permit the embedment of the entire surface of each bar in concrete. Lapped bars shall not be spaced farther apart than 1/5 the required length of lap or 6 inches.

-- End of Section --

This page was intentionally left blank for duplex printing.

SECTION TABLE OF CONTENTS

DIVISION 03 - CONCRETE

SECTION 03307A

CONCRETE FOR MINOR STRUCTURES

09/02

PART 1 GENERAL

1.1 REFERENCES
1.2 DESCRIPTION
1.2.1 Work Covered by this Specification Section
1.3 SUBMITTALS
1.4 DESIGN AND PERFORMANCE REQUIREMENTS
1.4.1 Acceptance Testing
1.4.2 Construction Tolerances
1.4.3 Concrete Mixture Proportions and Strength

PART 2 PRODUCTS

2.1 MATERIALS
2.1.1 Cementitious Materials
2.1.1.1 Portland Cement
2.1.2 Aggregates
2.1.3 Admixtures
2.1.3.1 Air-Entraining Admixture
2.1.3.2 Accelerating Admixture
2.1.3.3 Water-Reducing or Retarding Admixture
2.1.4 Water
2.1.5 Reinforcing Steel
2.1.6 Expansion Joint Filler Strips, Premolded
2.1.7 Formwork
2.1.8 Form Coatings
2.1.9 Vapor Barrier
2.1.10 Curing Materials
2.1.10.1 Impervious Sheet Materials
2.1.10.2 Membrane-Forming Curing Compound

PART 3 EXECUTION

3.1 PREPARATION
3.1.1 General
3.2 PRODUCTION OF CONCRETE
3.2.1 Ready-Mixed Concrete
3.2.2 Concrete Made by Volumetric Batching and Continuous Mixing
3.2.3 Batching and Mixing Equipment
3.3 CONVEYING AND PLACING CONCRETE
3.3.1 General

3.4 FINISHING
3.4.1 General
3.5 CURING AND PROTECTION
3.5.1 General
3.6 TESTS AND INSPECTIONS
3.6.1 General

-- End of Section Table of Contents --

SECTION 03307A

CONCRETE FOR MINOR STRUCTURES
09/02

PART 1 GENERAL

1.1 REFERENCES

The publications listed below form a part of this specification to the extent referenced. The publications are referred to in the text by basic designation only.

ACI INTERNATIONAL (ACI)

ACI 308	(1992; R 1997) Standard Practice for Curing Concrete
ACI 318/318R	(1999) Building Code Requirements for Structural Concrete and Commentary
ACI 318M	(1995) Metric Building Code Requirements for Structural Concrete and Commentary
ACI 347R	(1994; R 1999) Guide to Formwork for Concrete

AMERICAN SOCIETY FOR TESTING AND MATERIALS (ASTM)

ASTM A 185	(1997) Steel Welded Wire Fabric, Plain, for Concrete Reinforcement
ASTM A 615/A 615M	(2000) Deformed and Plain Billet-Steel Bars for Concrete Reinforcement
ASTM C 143/C 143M	(2000) Slump of Hydraulic Cement Concrete
ASTM C 150	(1999a) Portland Cement
ASTM C 171	(1997a) Sheet Materials for Curing Concrete
ASTM C 172	(1999) Sampling Freshly Mixed Concrete
ASTM C 231	(1997el) Air Content of Freshly Mixed Concrete by the Pressure Method
ASTM C 260	(2000) Air-Entraining Admixtures for Concrete
ASTM C 309	(1998a) Liquid Membrane-Forming Compounds

	for Curing Concrete
ASTM C 31/C 31M	(2000e1) Making and Curing Concrete Test Specimens in the Field
ASTM C 33	(1999ae1) Concrete Aggregates
ASTM C 39/C 39M	(2001) Compressive Strength of Cylindrical Concrete Specimens
ASTM C 494/C 494M	(1999ae1) Chemical Admixtures for Concrete
ASTM C 595	(2000a) Blended Hydraulic Cements
ASTM C 595M	(1997) Blended Hydraulic Cements (Metric)
ASTM C 618	(2000) Coal Fly Ash and Raw or Calcined Natural Pozzolan for Use as a Mineral Admixture in Concrete
ASTM C 685	(2000) Concrete Made by Volumetric Batching and Continuous Mixing
ASTM C 920	(1998) Elastomeric Joint Sealants
ASTM C 94/C 94M	(2000e2) Ready-Mixed Concrete
ASTM D 1752	(1984; R 1996el) Preformed Sponge Rubber and Cork Expansion Joint Fillers for Concrete Paving and Structural Construction
ASTM D 75	(1987; R 1997) Sampling Aggregates
ASTM D 98	(1998) Calcium Chloride
ASTM E 96	(2000) Water Vapor Transmission of Materials

U.S. ARMY CORPS OF ENGINEERS (USACE)

COE CRD-C 400	(1963) Requirements for Water for Use in Mixing or Curing Concrete
COE CRD-C 572	(1974) Corps of Engineers Specifications for Polyvinylchloride Waterstop

1.2 DESCRIPTION

1.2.1 Work Covered by this Specification Section

This specification section covers the portland cement concrete and related materials used in the construction of sidewalks, curbs, curb-and-gutter(s), multi-use (bike) paths, golf cart paths, and masonry wall footings.

Requirements for reinforcing materials are included in SECTION 03201 - STEEL BARS AND WELDED WIRE FABRIC FOR CONRCRETE REINFORCEMENT FOR CIVIL WORKS. Requirements for the construction and finishing of sidewalks, curbs, curb-and-gutter(s), multi-use (bike) paths, and golf cart paths are included in SETION 02770 - CONCRETE SIDEWALKS AND CURBS AND GUTTERS.

1.3 SUBMITTALS

Government approval is required for submittals with a "G" designation; submittals not having a "G" designation are for information only. The following shall be submitted in accordance with Section 01330 SUBMITTAL PROCEDURES:

SD-03 Product Data

Air-Entraining Admixture:
Accelerating Admixture:
Water-Reducing or Retarding Admixture:
Curing Materials:
Reinforcing Steel:
Expansion Joint Filler Strips, Pre-molded:

Manufacturer's literature is available from suppliers which demonstrates compliance with applicable specifications for the above materials.

SD-06 Test Reports

Concrete Mixture Proportions:
Ten days prior to placement of concrete, the contractor shall submit the mixture proportions that will produce concrete of the quality required. Applicable test reports shall be submitted to verify that the concrete mixture proportions selected will produce concrete of the quality specified.

SD-07 Certificates

Cementitious Materials:
Certificates of compliance attesting that the concrete materials meet the requirements of the specifications shall be submitted in accordance with the Special Clause "CERTIFICATES OF COMPLIANCE". Cementitious material will be accepted on the basis of a manufacturer's certificate of compliance, accompanied by mill test reports that the material(s) meet the requirements of the specification under which it is furnished.

Aggregates:
Aggregates will be accepted on the basis of certificates of compliance and tests reports that show the material(s) meet the quality and grading requirements of the specifications under which it is furnished.

1.4 DESIGN AND PERFORMANCE REQUIREMENTS

The Government will maintain the option to sample and test aggregates and concrete to determine compliance with the specifications. The Contractor shall provide facilities and labor as may be necessary to assist the Government in procurement of representative test samples. Samples of aggregates will be obtained at the point of batching in accordance with ASTM D 75. Concrete will be sampled in accordance with ASTM C 172. Slump and air content will be determined in accordance with ASTM C 143/C 143M and ASTM C 231, respectively, when cylinders are molded. Compression test specimens will be made, cured, and transported in accordance with ASTM C 31/C 31M. Compression test specimens will be tested in accordance with ASTM C 39/C 39M. Samples for strength tests will be taken not less than once each shift in which concrete is produced. A minimum of three specimens will be made from each sample; two will be tested at 28 days for acceptance, and one will be tested at 7 days for information.

1.4.1 Acceptance Testing

Acceptance test results will be the average strengths of two specimens tested at 28 days. The strength of the concrete will be considered satisfactory so long as the average of three consecutive acceptance test results equal or exceed the specified compressive strength, f'c, and no individual acceptance test result falls below f'c by more than 500 psi.

1.4.2 Construction Tolerances

Construction tolerances shall be as noted on the drawings, as noted in SECTION 02770 - CONCRETE SIDEWALKS AND CURBS AND GUTTERS, and in accordance with industry standards.

1.4.3 Concrete Mixture Proportions and Strength

Concrete mixture proportions shall be the responsibility of the Contractor. Mixture proportions shall include the dry weights of cementitious material(s); the nominal maximum size of the coarse aggregate; the specific gravities, absorptions, and saturated surface-dry weights of fine and coarse aggregates; the quantities, types, and names of admixtures; and quantity of water per cubic yard of concrete. All materials included in the mixture proportions shall be of the same type and from the same source as will be used on the project.

Specified compressive strength f'c shall be 2,500 psi at 28 days for masonry wall footings and 3,000 psi at 28 days for all other concrete work including, but not limited to sidewalks, curbs, curb ramps, curb-and-gutter(s), multi-use (bicycle paths, and golf cart paths. The maximum size of the aggregate shall not be larger than one-fifth of the narrowest dimension between forms of the members for which the concrete is to be used, or larger than 3/4 of the minimum clear spacing between reinforcing bars. The air content shall be be 4.5 to 6 percent. The slump shall be two inches (2") plus or minus one inch (1"). The maximum water cement ratio shall be 0.50.

PART 2 PRODUCTS

2.1 MATERIALS

Air-Entraining Admixture:
Accelerating Admixture:
Water-Reducing or Retarding Admixture:
Curing Materials:
Reinforcing Steel:
Expansion Joint Filler Strips, Pre-molded:

Manufacturer's literature is available from suppliers which demonstrates compliance with applicable specifications for the above materials.

Concrete Mixture Proportions:
Ten days prior to placement of concrete, the contractor shall submit the mixture proportions that will produce concrete of the quality required. Applicable test reports shall be submitted to verify that the concrete mixture proportions selected will produce concrete of the quality specified.

Cementitious Materials:
Certificates of compliance attesting that the concrete materials meet the requirements of the specifications shall be submitted in accordance with the Special Clause "CERTIFICATES OF COMPLIANCE". Cementitious material will be accepted on the basis of a manufacturer's certificate of compliance, accompanied by mill test reports that the material(s) meet the requirements of the specification under which it is furnished.

Aggregates:
Aggregates will be accepted on the basis of certificates of compliance and tests reports that show the material(s) meet the quality and grading requirements of the specifications under which it is furnished.

2.1.1 Cementitious Materials

Cementitious materials shall conform to the appropriate specifications listed:

2.1.1.1 Portland Cement

ASTM C 150, Type II, low alkali.

2.1.2 Aggregates

Aggregates shall meet the quality and grading requirements of ASTM C 33 Class Designations 4M or better.

2.1.3 Admixtures

Admixtures of any type, except as otherwise noted, shall not be used unless written authorization has been obtained from the Contracting Officer.

2.1.3.1 Air-Entraining Admixture

Air-entraining admixture shall meet the requirements of ASTM C 260.

2.1.3.2 Accelerating Admixture

Calcium chloride shall meet the requirements of ASTM D 98. Other accelerators shall meet the requirements of ASTM C 494/C 494M, Type C or E.

2.1.3.3 Water-Reducing or Retarding Admixture

Water-reducing or retarding admixture shall meet the requirements of ASTM C 494/C 494M, Type A, B, or D.

2.1.4 Water

Water for mixing and curing shall be fresh, clean, potable, and free from injurious amounts of oil, acid, salt, or alkali, except that unpotable water may be used if it meets the requirements of COE CRD-C 400.

2.1.5 Reinforcing Steel

Reinforcing steel bar and welded steel wire fabric shall conform to the requirements as identified in SECTION 03201 - STEEL BARS AND WELDED WIRE FABRIC FOR CONCRETE REINFORCEMENT FOR CIVIL WORKS.

2.1.6 Expansion Joint Filler Strips, Premolded

Expansion joint filler strips shall be hard-pressed fiberboard.

2.1.7 Formwork

The design and engineering of the formwork as well as its construction, shall be the responsibility of the Contractor.

2.1.8 Form Coatings

Forms for exposed surfaces shall be coated with a nonstaining form oil, which shall be applied shortly before concrete is placed.

2.1.9 Vapor Barrier

Vapor barrier shall be polyethylene sheeting with a minimum thickness of 6 mils or other equivalent material having a vapor permeance rating not exceeding 0.5 perms as determined in accordance with ASTM E 96.]

2.1.10 Curing Materials

Curing materials shall conform to the following requirements.

2.1.10.1 Impervious Sheet Materials

Impervious sheet materials, ASTM C 171, type optional, except polyethylene

film, if used, shall be white opaque.

2.1.10.2 Membrane-Forming Curing Compound

ASTM C 309, Type 1-D or 2, Class A.

PART 3 EXECUTION

3.1 PREPARATION

3.1.1 General

Subgrade preparation, formwork, and other related activities shall be as specified in SECTION 02770 - CONCRETE SIDEWALKS AND CURBS, AND GUTTERS. prior to placing.

3.2 PRODUCTION OF CONCRETE

3.2.1 Ready-Mixed Concrete

Ready-mixed concrete shall conform to ASTM C 94/C 94M except as otherwise specified.

3.2.2 Concrete Made by Volumetric Batching and Continuous Mixing

Concrete made by volumetric batching and continuous mixing shall conform to ASTM C 685.

3.2.3 Batching and Mixing Equipment

The Contractor shall have the option of using an on-site batching and mixing facility. The facility shall provide sufficient batching and mixing equipment capacity to prevent cold joints. The method of measuring materials, batching operation, and mixer shall be submitted for review. On-site plant shall conform to the requirements of either ASTM C 94/C 94M or ASTM C 685.

3.3 CONVEYING AND PLACING CONCRETE

3.3.1 General

Conveying and placing concrete shall be in accordance with SECTION 02770 - CONCRETE SIDEWALKS AND CURBS, AND GUTTERS.

3.4 FINISHING

3.4.1 General

Finishing of concrete shall be in accordance with SECTION 02770 - CONCRETE SIDEWALKS AND CURBS AND GUTTERS.

3.5 CURING AND PROTECTION

3.5.1 General

The curing and protection of concrete shall be performed in accordance with SECTION 02770 - CONCRETE SIDEWLKS AND CURBS AND GUTTERS.

3.6 TESTS AND INSPECTIONS

3.6.1 General

Testing and inspection work shall be performed in accordance with SECTION 02770 - CONCRETE SIDEWALKS AND CURBS AND GUTTERS.

-- End of Section --

SECTION TABLE OF CONTENTS

DIVISION 03 - CONCRETE

SECTION 03410N

PLANT-PRECAST STRUCTURAL CONCRETE

09/02

PART 1 GENERAL

1.1 REFERENCES
1.2 PRECAST MEMBERS
1.3 SUBMITTALS
1.4 QUALITY CONTROL
1.4.1 Precast Concrete Member Design
1.5 DELIVERY AND STORAGE
1.6 FACTORY INSPECTION
1.7 QUALITY ASSURANCE
1.7.1 Drawing Information
1.7.2 Design Calculations

PART 2 PRODUCTS

2.1 Drawings of precast members (pump vaults)
2.2 CONTRACTOR-FURNISHED MIX DESIGN
2.3 MATERIALS

PART 3 EXECUTION

3.1 SURFACE REPAIR
3.2 ERECTION / INSTALLATION
3.3 BEARING SURFACES
3.4 ANCHORAGE
3.5 WELDING
3.6 OPENINGS
3.7 GROUTING
3.8 SEALANTS

-- End of Section Table of Contents --

SECTION 03410N

PLANT-PRECAST STRUCTURAL CONCRETE
09/02

PART 1 GENERAL

1.1 REFERENCES

The publications listed below form a part of this specification to the extent referenced. The publications are referred to in the text by the basic designation only.

AMERICAN ASSOCIATION OF STATE HIGHWAY AND TRANSPORTATION OFFICIALS (AASHTO)

AASHTO SSHB-I-14	Highway Bridges-Division I-Section 14: Bearings

ACI INTERNATIONAL (ACI)

ACI 304R	(1989) Measuring, Mixing, Transporting, and Placing Concrete
ACI 305R	(1991) Hot Weather Concreting
ACI 306.1	(1990) Cold Weather Concreting
ACI 309R	(1996) Consolidation of Concrete
ACI 318/318M	(1995) Building Code Requirements for Structural Concrete

AMERICAN NATIONAL STANDARDS INSTITUTE (ANSI)

ANSI A135.4	(1995) Basic Hardboard

AMERICAN SOCIETY FOR TESTING AND MATERIALS (ASTM)

ASTM A 27/A 27M	(1995) Steel Castings, Carbon, for General Application
ASTM A 36/A 36M	(2000a) Carbon Structural Steel
ASTM A 47M	(1990) Ferritic Malleable Iron Castings (Metric)
ASTM A 47	(1990) Ferritic Malleable Iron Castings
ASTM A 123/A 123M	(2001; Rev. A) Zinc (Hot-Dip Galvanized) C Coatings on Iron and Steel Products

ASTM A 153/A 153M	(2001; Rev. A) Zinc Coating (Hot-Dip) on Iron and Steel Hardware
ASTM A 185	(1997) Steel Welded Wire Fabric, Plain, for Concrete Reinforcement
ASTM A 307	(1997) Carbon Steel Bolts and Studs, 60,000 psi Tensile Strength
ASTM A 325M	(1993) High-Strength Bolts for Structural Steel Joints (Metric)
ASTM A 325	(1997) Structural Bolts, Steel, Heat Treated, 120/105 ksi Minimum Tensile Strength
ASTM A 497	(1999) Steel Welded Wire Fabric, Deformed, for Concrete Reinforcement
ASTM A 563M	(1996) Carbon and Alloy Steel Nuts (Metric)
ASTM A 563	(1996) Carbon and Alloy Steel Nuts
ASTM A 615/A 615M	(2000) Deformed and Plain Billet-Steel Bars for Concrete Reinforcement
ASTM A 616/A 616M	(1996a) Rail-Steel Deformed and Plain Bars for Concrete Reinforcement
ASTM A 617/A 617M	(1996a) Axle-Steel Deformed and Plain Bars for Concrete Reinforcement
ASTM A 706/A 706M	(2000) Low-Alloy Steel Deformed and Plain Bars for Concrete Reinforcement
ASTM A 780	(1993; Rev. A) Repair of Damaged and Uncoated Areas of Hot-Dip Galvanized Coatings
ASTM C 33	(1999ael) Concrete Aggregates
ASTM C 94	(1997) Ready-Mixed Concrete
ASTM C 150	(1999a) Portland Cement
ASTM C 260	(2000) Air-Entraining Admixtures for Concrete
ASTM C 330	(1989) Lightweight Aggregates for Structural Concrete
ASTM C 494	(1992) Chemical Admixtures for Concrete
ASTM C 595M	(1997) Blended Hydraulic Cements (Metric)

ASTM C 595	(2000a) Blended Hydraulic Cements
ASTM C 618	(2000) Coal Fly Ash and Raw or Calcined Natural Pozzolan for Use as a Mineral Admixture in Concrete
ASTM C 989	(1997) Ground Granulated Blast-Furnace Slag for Use in Concrete and Mortars
ASTM C 1107	(1997) Packaged Dry, Hydraulic-Cement Grout (Nonshrink)
ASTM F 436M	(1993) Hardened Steel Washers (Metric)
ASTM F 436	(1993) Hardened Steel Washers
ASTM F 844	(1990) Washers, Steel, Plain (Flat), Unhardened for General Use

AMERICAN WELDING SOCIETY (AWS)

AWS D1.4	(1998) Structural Welding Code - Reinforcing Steel

PRECAST/PRESTRESSED CONCRETE INSTITUTE (PCI)

PCI MNL-116	(1985) Quality Control for Plants and Production of Precast Prestressed Concrete Products
PCI MNL-120	(1992) Design Handbook - Precast and Prestressed Concrete
PCI MNL-124	(1989) Fire Resistance of Precast Prestressed Concrete

UNDERWRITERS LABORATORIES (UL)

UL Fire Resist Dir	(1997) Fire Resistance Directory

1.2 PRECAST MEMBERS

The work includes the provision of precast non-prestressed concrete herein referred to as precast members. Precast members (pump vaults) shall be the product of a manufacturer specializing in the production of precast concrete members/ vaults. In the ACI publications, the advisory provisions shall be considered to be mandatory, as though the word "shall" has been substituted for "should" wherever it appears; reference to the "Building Official," the "Structural Engineer" and the "Architect/Engineer" shall be interpreted to mean the Contracting Officer.

1.3 SUBMITTALS

Submit the following in accordance with Section 01330, "Submittal Procedures."

SD-02 Shop Drawings

Drawings of precast members (pump vaults); G

SD-05 Design Data

Design Calculations
CONTRACTOR-FURNISHED MIX DESIGN

1.4 QUALITY CONTROL

1.4.1 Precast Concrete Member Design

ACI 318/318M and the PCI MNL-120. Design precast members (including connections) for the design load conditions and spans indicated, and for additional loads imposed by openings and supports of the work of other trades. Design precast members for handling without cracking in accordance with the PCI MNL-120.

1.5 DELIVERY AND STORAGE

Lift and support precast members at the lifting and supporting points indicated on the shop drawings. Store precast members off the ground. Separate stacked precast members by battens across the full width of each bearing point. Protect from weather, marring, damage, and overload.

1.6 FACTORY INSPECTION

At the option of the Contracting Officer, precast units may be inspected by the Contracting Officer prior to being transported to the job site. The Contractor shall give notice 14 days prior to the time the units will be available for plant inspection. Neither the exercise nor waiver of inspection at the plant will affect the Government's right to enforce contractual provisions after units are transported or erected.

1.7 QUALITY ASSURANCE

1.7.1 Drawing Information

Submit drawings indicating complete information for the fabrication, handling, and installation of the precast member (pump vault). Drawings shall not be reproductions of contract drawings. Design calculations and drawings of precast members (including connections) shall be prepared and sealed by a registered professional engineer, and submitted for approval prior to delivery to the site. The drawings shall indicate, as a minimum, the following information:

a. Connections for work of other trades

b. Location and size of openings

c. Reinforcing details

d. Material properties of steel and concrete used

e. Dimensions and surface finishes

f. Loads used in design (such as live, dead, handling, and erection)

1.7.2 Design Calculations

Submit calculations reflecting design conforming to requirements of paragraph entitled "Precast Concrete Member Design." Design calculations and drawings of precast members (including connections) shall be prepared and sealed by a registered professional engineer, and submitted for approval prior to fabrication.

PART 2 PRODUCTS

2.1 Drawings of precast members (pump vaults)

2.2 CONTRACTOR-FURNISHED MIX DESIGN

ACI 318/318M. The minimum compressive strength of concrete at 28 days shall be 5000 psi, unless otherwise indicated. Add air-entraining admixtures at the mixer to produce between 4 and 6 percent air by volume.

2.3 MATERIALS

Precast concrete construction shall comply with ASTM C858, except as modified herein.

Precast construction shall be of the rigid type and behave monolithically. Do not use panel type vaults. Design loads shall be in accordance with ASTM C857. Traffic loads shall be designation A-16 per Table 1 with a 20 percent increase due to impact. Soil lateral loads shall be as determined by ASTM C857 or loadings specified in the project soils report, whichever is greater. Alternate design by the ultimate strength method shall include a load factor of 1.7 for lateral earth and 1.4 for hydrostatic pressures. Minimum wall thickness shall be 8-inches. Two layers of reinforcing steel shall be required in wall and roof sections.

Necessary provisions shall be made in the design to accommodate additional stresses or loads which maybe imposed during factory precasting, transporting, or erecting.

In the event of conflict between or among standards, the more stringent shall govern.

2.3 PRECAST CONCRETE RISERS

Precast concrete grade rings and cones shall comply with ASTM C478, except that the minimum wall thickness shall be 6-inches. Provide interlocking

keyways on rings and cones. Provide grade ring with cast-in-place inserts for the access hatch or manhole frame and cover. Provide water tight joints.

2.4 SEALANTS AND GROUT

Plastic sealing compound shall be SIKADUR 1A. Mortar shall comply with ASTM C387, Type S.

PART 3 EXECUTION

3.1 SURFACE REPAIR

Prior to erection, and again after installation, precast members shall be checked for damage, such as cracking, spalling, and honeycombing. As directed by the Contracting Officer, precast members that do not meet the surface finish requirements specified in Part 2 in paragraph entitled "Surface Finish" shall be repaired, or removed and replaced with new precast members.

3.2 ERECTION / INSTALLATION

Precast members shall be erected / installed after the concrete has attained the specified compressive strength, unless otherwise approved by the precast manufacturer. Erect in accordance with the approved shop drawings. PCI MNL-116 and PCI MNL-120 (Chapter 8), for tolerances. Brace precast members, unless design calculations submitted with the shop drawings indicate bracing is not required. Follow the manufacturer's recommendations for maximum construction loads. Place precast members level, plumb, square, and true within tolerances. Align member ends.

3.3 BEARING SURFACES

Shall be flat, free of irregularities, and properly sized.

3.4 ANCHORAGE

Provide anchorage for fastening work in place. Conceal fasteners where practicable. Make threaded connections up tight and nick threads to prevent loosening.

3.5 WELDING

AWS D1.4 for welding connections and reinforcing splices. Protect the concrete and other reinforcing from heat during welding. Weld continuously along the entire area of contact. Grind smooth visible welds in the finished installation.

3.6 OPENINGS

Holes or cuts requiring reinforcing to be cut, which are not indicated on the approved shop drawing, shall only be made with the approval of the Contracting Officer and the precast manufacturer. Drill holes less than 12 inches in diameter with a diamond tipped core drill.

3.7 GROUTING

Clean and fill keyways between precast members, and other indicated areas, solidly with nonshrink grout or cementitious grout. Provide reinforcing where indicated. Remove excess grout before hardening.

3.8 SEALANTS

Provide as requiired by approved shop drawings.

-- End of Section --

SECTION TABLE OF CONTENTS

DIVISION 03 - CONCRETE

SECTION 03601

GROUTED RIP-RAP

PART 1 GENERAL

1.1 REFERENCES
1.2 SUBMITTALS
1.3 QUALIFICATIONS

PART 2 PRODUCTS

2.1 ROCK FOR GROUTED RIP-RAP
2.2 PORTLAND CEMENT GROUT USED FOR GROUTED RIP-RAP
2.3 AGGREGATES FOR GROUT USED FOR GROUTED RIP-RAP
2.3.1 Fine Aggregate
2.3.2 Coarse Aggregate
2.4 WATER FOR GROUT USED FOR GROUTED RIP-RAP
2.5 MIX DESIGN
2.6 MINIMUM COMPRESSIVE STRENGTH OF GROUT

PART 3 EXECUTION

3.1 GRADING OF AREAS TO RECEIVE GROUTED RIP-RAP
3.2 SUBGRADE COMPACTION
3.3 BATCHING, TRANSPORTATION, AND DELIVERY OF GROUT
3.4 RIP-RAP INSTALLATION
3.5 FIELD SAMPLING AND TESTING

-- End of Section Table of Contents --

SECTION 03601

GROUTED RIP-RAP

PART 1 GENERAL

1.1 REFERENCES

The publications listed below form a part of this specification to the extent referenced. The publications are referred to in the text by basic designation only.

AMERICAN SOCIETY FOR TESTING AND MATERIALS (ASTM)

ASTM C 31	Making and Curing Concrete Test Specimens in the Field.
ASTM C 94	(1997) Ready-Mix Concrete
ASTM C 143	(1990a) Slump of Portland Cement Concrete
ASTM C 144	Aggregate for Masonry Mortar
ASTM C 150	(1999a) Portland Cement
ASTM D 448	Standard sizes of Coarse Aggregate for Highway Construction

1.2 SUBMITTALS

Government approval is required for submittals with a "G" designation; submittals not having a "G" designation are for information only. The following shall be submitted in accordance with Section 01330 SUBMITTAL PROCEDURES:

SD-02 Shop Drawings

Mix Design for Grout; G

Curing method for grout; G

1.3 QUALIFICATIONS

The individual responsible for supervising the construction of the grouted rip-rap shall have not less than one-year of prior experience with the construction of grouted rip-rap.

PART 2 PRODUCTS

2.1 ROCK FOR GROUTED RIP-RAP

Rock (Stone) used for the construction of grouted rip-rap shall be locally obtained Salt River Rock that is free from seams and coatings. A minimum of 50 percent of the rock used in the construction of the grouted rip-rap shall be 6 inches in diameter, or larger.

2.2 PORTLAND CEMENT GROUT USED FOR GROUTED RIP-RAP

The portland cement used for the manufacture of grout shall be Type II, low alkali portland cement in accordance with ASTM C-150.

2.3 AGGREGATES FOR GROUT USED FOR GROUTED RIP-RAP

2.3.1 Fine Aggregate

Fine aggregate shall consist of sand produced by the crushing of rock or gravel or a naturally occurring material. Sand shall be free of deleterious amounts of organic material, mica, loam, clay, or other substances.

2.3.2 Coarse Aggregate

Coarse aggregate shall consist of gravel or crushed rock in accordance with ASTM D 448. Not less than 80% of the coarse aggregate shall pass a one and one-half inch (1-1/2") screen.

2.4 WATER FOR GROUT USED FOR GROUTED RIP-RAP

Water used for the mixing of grout shall be potable. The amount of water shall be as required to produce a slump of three to five inches (3" to 5").

2.5 MIX DESIGN

Except as noted herein, the gradation of aggregates used in the batching of grout for grouted rip-rap shall be be the responsibility of the Contractor and shall be as required to provide grout of the compressive strength specified herein. The amount of water used shall be as required to produce a slump of three inches to five inches (3" to 5"). The Contractor shall submit his proposed mix design to the Contracting Officer for review and approval. The construction of the grouted rip-rap shall not commence until the mix design has been approved by the Contracting Officer.

2.6 MINIMUM COMPRESSIVE STRENGTH OF GROUT

The grout used in the construction of the grouted rip-rap shall have a compressive strength at 28 days of not less than 2500 psi.

PART 3 EXECUTION

3.1 GRADING OF AREAS TO RECEIVE GROUTED RIP-RAP

Areas to receive grouted rip-rap shall be brought to the lines and grades indicated on the drawings with allowances for the depth of the installed grouted rip-rap material. All grades shall be approved by the Contracting

Officer prior to the start of grouted rip-rap installation.

3.2 SUBGRADE COMPACTION

The subgrade below the areas to receive grouted rip-rap shall be compacted as specified in SECTION 02300 - EARTHWORK. The subgrade shall be compacted to not less than 90% of the maximum laboratory density.

3.3 BATCHING, TRANSPORTATION, AND DELIVERY OF GROUT

The grout materials shall be batched in accordance with the approved mix design and transported to the job site in accordance with ASTM C-94. The total time elapsed between the addition of water at the batch plant and the placement of the completed mix at the job site shall not exceed 90 minutes.

3.4 RIP-RAP INSTALLATION

Each panel of grouted rip-rap shall be constructed as part of a continuous operation. Work shall not be stopped until the entire panel has been constructed. The grouted and rip-rap rock shall be installed in such a manner as to eliminate voids and air pockets. It shall be installed to the minimum depth shown on the drawings. Rock on the surface of the rip-rap panel shall be hand-placed into the grout so as to minimize the visibility of the grout on the exposed surface. Surface rock shall be set into the grout so that not less than 2/3 of the rock is embedded into the grout.

3.5 FIELD SAMPLING AND TESTING

Specimens of the grout used in the construction of grouted rip-rap shall be taken in the field in accordance with ASTM C-31. A minimum of 4 cylinder specimens shall be taken for each 10 yards of grout delivered to the site with not less than 4 cylinder specimens for each half-day pour. Testing work shall be performed in accordance with SECTION 03307 - CONCRETE FOR MINOR STRUCTURES.

END SECTION

SECTION TABLE OF CONTENTS

DIVISION 04 - MASONRY

SECTION 04200A

MASONRY

PART 1 GENERAL

1.1 REFERENCES
1.2 SUBMITTALS
1.3 SAMPLE MASONRY PANELS
1.3.1 Configuration
1.3.2 Composition
1.3.3 Usage
1.4 DELIVERY, HANDLING, AND STORAGE
1.4.1 Masonry Units
1.4.2 Reinforcement, Anchors, and Ties
1.4.3 Cementitious Materials, Sand and Aggregates

PART 2 PRODUCTS

2.1 GENERAL REQUIREMENTS
2.2 [Enter Appropriate Subpart Title Here]
2.3 CONCRETE MASONRY UNITS (CMU)
2.3.1 Aggregates
2.3.2 Kinds and Shapes
2.3.2.1 Architectural Units
2.4 [Enter Appropriate Subpart Title Here]
2.4.1 [Enter Appropriate Subpart Title Here]
2.4.2 Horizontal Joint Reinforcement
2.4.3 Strip Anchor
2.4.4 Wire-Type Anchor
2.4.5 Expansion Strip
2.4.6 Packing (Backer Rods)
2.5 [Enter Appropriate Subpart Title Here]
2.6 MORTAR
2.6.1 Admixtures
2.6.2 Coloring
2.7 GROUT
2.7.1 Admixtures
2.7.2 Grout Barriers
2.8 ANCHORS, TIES, AND BAR POSITIONERS
2.8.1 Bar Positioners
2.9 JOINT REINFORCEMENT
2.10 REINFORCING STEEL BARS AND RODS
2.11 CONTROL JOINT KEYS
2.12 EXPANSION-JOINT MATERIALS
2.13 [Enter Appropriate Subpart Title Here]

PART 3 EXECUTION

3.1 ENVIRONMENTAL REQUIREMENTS
3.1.1 Hot Weather Installation
3.2 LAYING MASONRY UNITS
3.2.1 Surface Preparation
3.2.2 Forms and Shores
3.2.3 Concrete Masonry Units
3.2.4 Tolerances
3.2.5 Cutting and Fitting
3.2.6 Jointing
3.2.6.1 Tooled Joints
3.2.6.2 [Enter Appropriate Subpart Title Here]
3.2.7 Joint Widths
3.2.7.1 Concrete Masonry Units
3.2.7.2 [Enter Appropriate Subpart Title Here]
3.2.8 Embedded Items
3.2.9 Unfinished Work
3.3 MORTAR
3.4 REINFORCING STEEL
3.4.1 Positioning Bars
3.4.2 Splices
3.5 JOINT REINFORCEMENT
3.6 PLACING GROUT
3.6.1 Vertical Grout Barriers for Fully Grouted Walls
3.6.2 Horizontal Grout Barriers
3.6.3 Grout Holes and Cleanouts
3.6.3.1 Grout Holes
3.6.3.2 Cleanouts for Hollow Unit Masonry Construction
3.6.4 Grouting Equipment
3.6.4.1 Grout Pumps
3.6.4.2 Vibrators
3.6.5 Grout Placement
3.6.5.1 Low-Lift Method
3.7 BOND BEAMS
3.8 CONTROL JOINTS
3.9 POINTING AND CLEANING
3.9.1 Concrete Masonry Unit Surfaces
3.9.2 [Enter Appropriate Subpart Title Here]
3.10 PROTECTION
3.11 TEST REPORTS
3.11.1 Field Testing of Mortar
3.11.2 Field Testing of Grout
3.11.3 Prism Tests

-- End of Section Table of Contents --

SECTION 04200A

MASONRY

PART 1 GENERAL

1.1 REFERENCES

The publications listed below form a part of this specification to the extent referenced. The publications are referred to in the text by basic designation only.

ACI INTERNATIONAL (ACI)

ACI SP-66	(1994) ACI Detailing Manual

AMERICAN SOCIETY FOR TESTING AND MATERIALS (ASTM)

ASTM A 82	(1997a) Steel Wire, Plain, for Concrete Reinforcement
ASTM A 153/A 153M	(2001; Rev. A) Zinc Coating (Hot-Dip) on Iron and Steel Hardware
ASTM A 615/A 615M	(2000) Deformed and Plain Billet-Steel Bars for Concrete Reinforcement
ASTM C 55	(1999) Concrete Brick
ASTM C 90	(2000) Loadbearing Concrete Masonry Units
ASTM C 91	(1999) Masonry Cement
ASTM C 129	(2000) Nonloadbearing Concrete Masonry Units
ASTM C 140	(1999b) Sampling and Testing Concrete Masonry Units
ASTM C 270	(2000) Mortar for Unit Masonry
ASTM C 476	(1999) Grout for Masonry
ASTM C 494/C 494M	(1999ael) Chemical Admixtures for Concrete
ASTM C 641	(1982; R 1998el) Staining Materials in Lightweight Concrete Aggregates
ASTM C 780	(2000) Preconstruction and Construction Evaluation of Mortars for Plain and

	Reinforced Unit Masonry
ASTM C 1019	(2000) Sampling and Testing Grout
ASTM C 1072	(2000) Measurement of Masonry Flexural Bond Strength
ASTM D 2287	(1996a) Nonrigid Vinyl Chloride Polymer and Copolymer Molding and Extrusion Compounds
ASTM E 119	(2000) Fire Tests of Building Construction and Materials
ASTM E 447	(1997) Compressive Strength of Masonry Prisms

1.2 SUBMITTALS

Government approval is required for submittals with a "G" designation; submittals not having a "G" designation are for information only. The following shall be submitted in accordance with Section 01330 SUBMITTAL PROCEDURES:

SD-04 Samples

Concrete Masonry Units (CMU); G

Color samples of three standard units and one unit for each type of special shape. Units shall show the full range of color and texture.

Anchors, Ties, and Bar Positioners; G

One of each type used.

SD-06 Test Reports

Field Testing of Mortar and Grout; G

Test reports from an approved independent laboratory.

SD-07 Certificates

Concrete Masonry Units (CMU)
Mortar Coloring
Mortar Admixtures
Joint Reinforcement

Certificates of compliance stating that the materials meet the specified requirements.

1.3 SAMPLE MASONRY PANELS

After material samples are approved and prior to starting masonry work, sample masonry panels shall be constructed for each type and color of masonry required. At least 48 hours prior to constructing the sample panel or panels, the Contractor shall submit written notification to the Contracting Officer. Sample panels may be part of the proposed wall. If sample plane is acceptable, wall construction may proceed. if the sample panel is not acceptable, it shall be removed and replaced.

1.3.1 Configuration

Panels shall be configured to represent the proposed wall elements. Panels shall be of the size necessary to demonstrate the acceptable level of workmanship. The minimum size of the sample panel shall be four feet (4') long by two feet (2') high.

1.3.2 Composition

Panels shall show full color range, texture, and bond pattern of the masonry work. The Contractor's method for mortar joint tooling; grouting of reinforced vertical cores, collar joints, bond beams, and lintels; positioning, securing, and lapping of reinforcing steel; positioning and lapping of joint reinforcement; and cleaning of masonry work shall be demonstrated during the construction of the panels. Installation or application procedures for anchors, wall ties shall be shown in the sample panels.

1.3.3 Usage

The completed panels shall be used as the standard of workmanship for the type of masonry represented. Masonry work shall not commence until the sample panel for that type of masonry construction has been completed and approved. Panels shall be protected from the weather and construction operations until the masonry work has been completed and approved. After completion of the work, the sample panels, including all foundation concrete, shall become the property of the Contractor and shall be removed from the construction site.

1.4 DELIVERY, HANDLING, AND STORAGE

Materials shall be delivered, handled, stored, and protected to avoid chipping, breakage, and contact with soil or contaminating material.

1.4.1 Masonry Units

Concrete masonry units shall be covered or protected from inclement weather.

1.4.2 Reinforcement, Anchors, and Ties

Steel reinforcing bars, coated anchors, ties, and joint reinforcement shall be stored above the ground. Steel reinforcing bars and uncoated ties shall be free of loose mill scale and rust.

1.4.3 Cementitious Materials, Sand and Aggregates

Cementitious and other packaged materials shall be delivered in unopened containers, plainly marked and labeled with manufacturers' names and brands. Cementitious material shall be stored in dry, weathertight enclosures or be completely covered. Cement shall be handled in a manner that will prevent the inclusion of foreign materials and damage by water or dampness. Sand and aggregates shall be stored in a manner to prevent contamination or segregation.

PART 2 PRODUCTS

2.1 GENERAL REQUIREMENTS

Field Testing of Mortar and Grout
Test reports from an approved independent laboratory.

Mortar Coloring
Mortar Admixtures

Certificates of compliance stating that the materials meet the specified requirements.

The source of materials which will affect the appearance of the finished work shall not be changed after the work has started except with Contracting Officer's approval.

2.2 [Enter Appropriate Subpart Title Here]

2.3 CONCRETE MASONRY UNITS (CMU)

Hollow and solid concrete masonry units (normal weight) shall conform to ASTM C 90, Type 1 with a minimum compressive strength of 1900 psi. Cement shall have a low alkali content and be of one brand.

2.3.1 Aggregates

Lightweight aggregates and blends of lightweight and heavier aggregates in proportions used in producing the units, shall comply with the following requirements when tested for stain-producing iron compounds in accordance with ASTM C 641: by visual classification method, the iron stain deposited on the filter paper shall not exceed the "light stain" classification.

2.3.2 Kinds and Shapes

Units shall be modular in size and may include closer, jamb, header, lintel, and bond beam units and special shapes and sizes as required to complete the work as indicated.

2.3.2.1 Architectural Units

Units shall have a textured surface (one side) as noted on the drawings. Pattern shall be split face. Units shall be integrally colored during manufacture. Color shall be as selected by the Contracting Officer. Patterned face shell shall be properly aligned in the completed wall.

2.4 [Enter Appropriate Subpart Title Here]2.4.1 [Enter Appropriate Subpart Title Here]

2.4.2 Horizontal Joint Reinforcement

Joint reinforcement shall be factory fabricated from steel wire, and shall conform to ASTM A 82. Wire shall be zinc coated after fabrication by the hot-dip process conforming to ASTM A 153/A 153M, Class B-2. Reinforcement shall consist of two or more parallel longitudinal wires not lighter than 9 gauge weld connected with cross wires not lighter than 14 gauge at not greater than 8 inches on center. Out-to-out dimension of the longitudinal wires shall be 1-1/2 inches less than the actual width of the block. Joint reinforcement in flat sections not less than 8 feet long shall be provided, except that corner reinforcements and other special shapes may be shorter.

2.4.3 Strip Anchor

Perforated steel strip shall be not less than 20 gauge, minimum of 1-3/4 inches wide by 24 inches long and galvanized after fabrication.

2.4.4 Wire-Type Anchor

Steel wire shall be not less than 9 gauge of approved design suitable for use with the panel stiffener provided and galvanized after fabrication.

2.4.5 Expansion Strip

Dense fibrous glass batt or material shall be as recommended by the glass block manufacturer.

2.4.6 Packing (Backer Rods)

Polyethylene foam, neoprene, or filler shall be as recommended by the sealant manufacturer.

2.5 [Enter Appropriate Subpart Title Here]

2.6 MORTAR

Mortar shall be Type S in accordance with the proportion specification of ASTM C 270 except Type S cement-lime mortar proportions shall be 1 part cement, 1/2 part lime and 4-1/2 parts aggregate. Cement shall have a low alkali content and be of one brand. Aggregates shall be from one source.

2.6.1 Admixtures

In cold weather, a non-chloride based accelerating admixture may be used subject to approval. Accelerating admixture shall be non-corrosive, shall contain less than 0.2 percent chlorides, and shall conform to ASTM C 494/C 494M, Type C.

2.6.2 Coloring

Mortar coloring shall be added to the mortar used for exposed masonry surfaces to produce a uniform color matching the selected color of the concrete masonry units. Mortar coloring shall not exceed 3 percent of the weight of cement for carbon black and ten percent of the weight of cement for all other pigments. Mortar coloring shall be chemically inert, of finely ground lime proof pigment, and furnished in accurately pre-measured and packaged units that can be added to a measured amount of cement.

2.7 GROUT

Grout shall conform to ASTM C 476 and shall be free of fly ash and/or chloride. Cement used in grout shall have a low alkali content. Grout slump shall be between 8 and 10 inches. Grout shall be used subject to the limitations of Table III. Proportions shall not be changed and materials with different physical or chemical characteristics shall not be used in grout for the work unless additional evidence is furnished that the grout meets the specified requirements.

2.7.1 Admixtures

In cold weather, a non-chloride based accelerating admixture may be used subject to approval. Accelerating admixture shall be non-corrosive, shall contain less than 0.2 percent chlorides, and shall conform to ASTM C 494/C 494M, Type C.

2.7.2 Grout Barriers

Grout barriers for vertical cores shall consist of fine mesh wire, fiberglass, or expanded metal.

2.8 ANCHORS, TIES, AND BAR POSITIONERS

Anchors and ties shall be fabricated without drips or crimps and shall be zinc-coated in accordance with ASTM A 153/A 153M, Class B-2. Steel wire used for anchors and ties shall be fabricated from steel wire conforming to ASTM A 82. Anchors and ties shall be sized to provide a minimum of 5/8 inch mortar cover from either face.

2.8.1 Bar Positioners

Bar positioners, used to prevent displacement of reinforcing bars during the course of construction, shall be factory fabricated from 9 gauge steel wire or equivalent, and coated with a hot-dip galvanized finish. Not more than one wire shall cross the cell.

2.9 JOINT REINFORCEMENT

Joint reinforcement shall be factory fabricated from steel wire conforming to ASTM A 82, welded construction. Tack welding will not be acceptable in reinforcement used for wall ties. Wire shall have zinc coating conforming to ASTM A 153/A 153M, Class B-2. All wires shall be a minimum of 9 gauge. Reinforcement shall be ladder type design, having one longitudinal wire in the mortar bed of each face shell for hollow units and one wire for solid

units. Joint reinforcement shall be placed a minimum of 5/8 inch cover from either face. The distance between crosswires shall not exceed 16 inches. Joint reinforcement for straight runs shall be furnished in flat sections not less than 10 feet long. Joint reinforcement shall be provided with factory formed corners and intersections. If approved for use, joint reinforcement may be furnished with adjustable wall tie features.

2.10 REINFORCING STEEL BARS AND RODS

Reinforcing steel bars and rods shall conform to ASTM A 615/A 615M, Grade 40.

2.11 CONTROL JOINT KEYS

Control joint keys shall be a factory fabricated solid section of natural or synthetic rubber (or combination thereof) conforming to ASTM D 2000or polyvinyl chloride conforming to ASTM D 2287. The material shall be resistant to oils and solvents. The control joint key shall be provided with a solid shear section not less than 5/8 inchthick and 3/8 inch thick flanges, with a tolerance of plus or minus 1/16 inch. The control joint key shall fit neatly, but without forcing, in masonry unit jamb sash grooves. The control joint key shall be flexible at a temperature of minus 30 degrees F after five hours exposure, and shall have a durometer hardness of not less than 70 when tested in accordance with ASTM D 2240.

2.12 EXPANSION-JOINT MATERIALS

Backer rod and sealant shall be adequate to accommodate joint compression equal to 50 percent of the width of the joint. The backer rod shall be compressible rod stock of polyethylene foam, polyurethane foam, butyl rubber foam, or other flexible, nonabsorptive material as recommended by the sealant manufacturer.

2.13 [Enter Appropriate Subpart Title Here]

PART 3 EXECUTION

3.1 ENVIRONMENTAL REQUIREMENTS

3.1.1 Hot Weather Installation

The following precautions shall be taken if masonry is erected when the ambient air temperature is more than 99 degrees F in the shade and the relative humidity is less than 50 percent. All masonry materials shall be shaded from direct sunlight; mortar beds shall be spread no more than 4 feet ahead of masonry; masonry units shall be set within one minute of spreading mortar; and after erection, masonry shall be protected from direct exposure to wind and sun for 48 hours.

3.2 LAYING MASONRY UNITS

Masonry units shall be laid in the indicated bond pattern. Facing courses shall be level with back-up courses, unless the use of adjustable ties has been approved in which case the tolerances shall be plus or minus 1/2 inch. Each unit shall be adjusted to its final position while mortar is still

soft and plastic. Units that have been disturbed after the mortar has stiffened shall be removed, cleaned, and relaid with fresh mortar. Air spaces, cavities, chases, expansion joints, and spaces to be grouted shall be kept free from mortar and other debris. Units used in exposed masonry surfaces shall be selected from those having the least amount of chipped edges or other imperfections detracting from the appearance of the finished work. Vertical joints shall be kept plumb. Units being laid and surfaces to receive units shall be free of water film. Solid units shall be laid in a nonfurrowed full bed of mortar. Units shall be shoved into place so that the vertical joints are tight. Vertical joints of brick and the vertical face shells of concrete masonry units, except where indicated at control, expansion, and isolation joints, shall be completely filled with mortar. Mortar will be permitted to protrude up to 1/2 inch into the space or cells to be grouted. Means shall be provided to prevent mortar from dropping into the space below.

3.2.1 Surface Preparation

Surfaces upon which masonry is placed shall be cleaned of laitance, dust, dirt, oil, organic matter, or other foreign materials and shall be slightly roughened to provide a surface texture with a depth of at least 1/8 inch. Sandblasting shall be used, if necessary, to remove laitance from pores and to expose the aggregate.

3.2.2 Forms and Shores

Forms and shores shall be sufficiently rigid to prevent deflections which may result in cracking or other damage to supported masonry and sufficiently tight to prevent leakage of mortar and grout. Supporting forms and shores shall not be removed in less than 10 days.

3.2.3 Concrete Masonry Units

Units in piers, pilasters, columns, starting courses on footings, solid foundation walls, lintels, and beams, and where cells are to be filled with grout shall be full bedded in mortar under both face shells and webs. Other units shall be full bedded under both face shells. Head joints shall be filled solidly with mortar for a distance in from the face of the unit not less than the thickness of the face shell. Foundation walls below grade shall be grouted solid. Jamb units shall be of the shapes and sizes to conform with wall units. Solid units may be incorporated in the masonry work where necessary to fill out at corners, gable slopes, and elsewhere as approved.

3.2.4 Tolerances

Masonry shall be laid plumb, true to line, with courses level. Bond pattern shall be kept plumb throughout. Corners shall be square unless noted otherwise. Except for walls constructed of prefaced concrete masonry units, masonry shall be laid within the following tolerances (plus or minus unless otherwise noted):

TABLE II

TOLERANCES

Variation from the plumb in the lines and surfaces of columns, walls and arises	
In adjacent masonry units	1/8 inch
In 10 feet	1/4 inch
Variations from horizontal lines	
In 10 feet	1/4 inch
In 20 feet	3/8 inch
In 40 feet or more	1/2 inch

3.2.5 Cutting and Fitting

Full units of the proper size shall be used wherever possible, in lieu of cut units. Cutting and fitting, including that required to accommodate the work of others, shall be done by masonry mechanics using power masonry saws. Concrete masonry units may be wet or dry cut. Wet cut units, before being placed in the work, shall be dried to the same surface-dry appearance as uncut units being laid in the wall. Cut edges shall be clean, true and sharp.

3.2.6 Jointing

Joints shall be tooled when the mortar is thumbprint hard. Horizontal joints shall be tooled last. Joints shall be brushed to remove all loose and excess mortar. Mortar joints shall be finished as follows:

3.2.6.1 Tooled Joints

Joints in exposed exterior and interior masonry surfaces shall be tooled slightly concave. Joints shall be tooled with a jointer slightly larger than the joint width so that complete contact is made along the edges of the unit. Tooling shall be performed so that the mortar is compressed and the joint surface is sealed. Jointer of sufficient length shall be used to obtain a straight and true mortar joint.

3.2.6.2 [Enter Appropriate Subpart Title Here]

3.2.7 Joint Widths

Joint widths shall be as follows:

3.2.7.1 Concrete Masonry Units

Concrete masonry units shall have 3/8 inch joints, except for prefaced concrete masonry units.

3.2.7.2 [Enter Appropriate Subpart Title Here]

3.2.8 Embedded Items

Spaces around built-in items shall be filled with mortar. Anchors, ties and joint reinforcement shall be fully embedded in the mortar. Cells

receiving anchor bolts and cells of the first course below bearing plates shall be filled with grout.

3.2.9 Unfinished Work

Unfinished work shall be stepped back for joining with new work. Toothing may be resorted to only when specifically approved. Loose mortar shall be removed and the exposed joints shall be thoroughly cleaned before laying new work.

3.3 MORTAR

Mortar shall be mixed in a mechanically operated mortar mixer for at least 3 minutes, but not more than 5 minutes. Measurement of ingredients for mortar shall be by volume. Ingredients not in containers, such as sand, shall be accurately measured by the use of measuring boxes. Water shall be mixed with the dry ingredients in sufficient amount to provide a workable mixture which will adhere to the vertical surfaces of masonry units. Mortar that has stiffened because of loss of water through evaporation shall be retempered by adding water to restore the proper consistency and workability. Mortar that has reached its initial set or that has not been used within 2-1/2 hours after mixing shall be discarded.

3.4 REINFORCING STEEL

Reinforcement shall be cleaned of loose, flaky rust, scale, grease, mortar, grout, or other coating which might destroy or reduce its bond prior to placing grout. Bars with kinks or bends not shown on the drawings shall not be used. Reinforcement shall be placed prior to grouting. Unless otherwise indicated, vertical wall reinforcement shall extend to within 2 inches of tops of walls.

3.4.1 Positioning Bars

Vertical bars shall be accurately placed within the cells at the positions indicated on the drawings. A minimum clearance of 1/2 inch shall be maintained between the bars and masonry units. Minimum clearance between parallel bars shall be one diameter of the reinforcement. Vertical reinforcing may be held in place using bar positioners located near the ends of each bar and at intermediate intervals of not more than 192 diameters of the reinforcement. Column and pilaster ties shall be wired in position around the vertical steel. Ties shall be in contact with the vertical reinforcement and shall not be placed in horizontal bed joints.

3.4.2 Splices

Bars shall be lapped a minimum of 48 diameters of the reinforcement. Welded or mechanical connections shall develop at least 125 percent of the specified yield strength of the reinforcement.

3.5 JOINT REINFORCEMENT

Joint reinforcement shall be installed at 16 inches on center or as indicated. Reinforcement shall be lapped not less than 6 inches.

Prefabricated sections shall be installed at corners and wall intersections. The longitudinal wires of joint reinforcement shall be placed to provide not less than 5/8 inch cover to either face of the unit.

3.6 PLACING GROUT

Cells containing reinforcing bars shall be filled with grout. Hollow masonry units in walls or partitions supporting plumbing, heating, or other mechanical fixtures, voids at door and window jambs, and other indicated spaces shall be filled solid with grout. Cells under lintel bearings on each side of openings shall be filled solid with grout for full height of openings. Walls below grade, lintels, and bond beams shall be filled solid with grout. Units other than open end units may require grouting each course to preclude voids in the units. Grout not in place within 1-1/2 hours after water is first added to the batch shall be discarded. Sufficient time shall be allowed between grout lifts to preclude displacement or cracking of face shells of masonry units. If blowouts, flowouts, misalignment, or cracking of face shells should occur during construction, the wall shall be torn down and rebuilt.

3.6.1 Vertical Grout Barriers for Fully Grouted Walls

Grout barriers shall be provided not more than 30 feet apart, or as required, to limit the horizontal flow of grout for each pour.

3.6.2 Horizontal Grout Barriers

Grout barriers shall be embedded in mortar below cells of hollow units receiving grout.

3.6.3 Grout Holes and Cleanouts

3.6.3.1 Grout Holes

Grouting holes shall be provided in slabs, spandrel beams, and other in-place overhead construction. Holes shall be located over vertical reinforcing bars or as required to facilitate grout fill in bond beams. Additional openings spaced not more than 16 inches on centers shall be provided where grouting of all hollow unit masonry is indicated. Openings shall not be less than 4 inches in diameter or 3 by 4 inches in horizontal dimensions. Upon completion of grouting operations, grouting holes shall be plugged and finished to match surrounding surfaces.

3.6.3.2 Cleanouts for Hollow Unit Masonry Construction

Cleanout holes shall be provided at the bottom of every pour in cores containing vertical reinforcement when the height of the grout pour exceeds 5 feet. Where all cells are to be grouted, cleanout courses shall be constructed using bond beam units in an inverted position to permit cleaning of all cells. Cleanout holes shall be provided at a maximum spacing of 32 inches where all cells are to be filled with grout. A new series of cleanouts shall be established if grouting operations are stopped for more than 4 hours. Cleanouts shall not be less than 3 by 4 inch openings cut from one face shell. Manufacturer's standard cutout units may

be used at the Contractor's option. Cleanout holes shall not be closed until masonry work, reinforcement, and final cleaning of the grout spaces have been completed and inspected. For walls which will be exposed to view, cleanout holes shall be closed in an approved manner to match surrounding masonry.

3.6.4 Grouting Equipment

3.6.4.1 Grout Pumps

Pumping through aluminum tubes will not be permitted. Pumps shall be operated to produce a continuous stream of grout without air pockets, segregation, or contamination. Upon completion of each day's pumping, waste materials and debris shall be removed from the equipment, and disposed of outside the masonry.

3.6.4.2 Vibrators

Internal vibrators shall maintain a speed of not less than 5,000 impulses per minute when submerged in the grout. At least one spare vibrator shall be maintained at the site at all times. Vibrators shall be applied at uniformly spaced points not further apart than the visible effectiveness of the machine. Duration of vibration shall be limited to time necessary to produce satisfactory consolidation without causing segregation.

3.6.5 Grout Placement

Masonry shall be laid to the top of a pour before placing grout. Grout shall not be placed in hollow unit masonry until mortar joints have set for at least 24 hours. Grout shall be placed using a hand bucket, concrete hopper, or grout pump to completely fill the grout spaces without segregation of the aggregates. Vibrators shall not be inserted into lower pours that are in a semi-solidified state. Low-lift grout methods may be used on pours up to and including 5 feet in height.

3.6.5.1 Low-Lift Method

Grout shall be placed at a rate that will not cause displacement of the masonry due to hydrostatic pressure of the grout. Mortar protruding more than 1/2 inch into the grout space shall be removed before beginning the grouting operation. Grout pours 12 inches or less in height shall be consolidated by mechanical vibration or by puddling. Grout pours over 12 inches in height shall be consolidated by mechanical vibration and reconsolidated by mechanical vibration after initial water loss and settlement has occurred. Vibrators shall not be inserted into lower pours that are in a semi-solidified state. Low-lift grout shall be used subject to the limitations of Table III.

TABLE III

POUR HEIGHT AND TYPE OF GROUT FOR VARIOUS GROUT SPACE DIMENSIONS

Maximum Grout Pour Height (feet) (4)	Grout Type	Grouting Procedure	Minimum Dimensions of the Total Clear Areas Within Grout Spaces and Cells (in.) (1,2) Multiwythe Masonry (3)	Hollow-unit Masonry
1	Fine	Low Lift	3/4	1-1/2 x 2
5	Fine	Low Lift	2	2 x 3
1	Coarse	Low Lift	1-1/2	1-1/2 x 3
5	Coarse	Low Lift	2	2-1/2 x 3

3.7 BOND BEAMS

Bond beams shall be filled with grout and reinforced as indicated on the drawings. Grout barriers shall be installed under bond beam units to retain the grout as required. Reinforcement shall be continuous, including around corners, except through control joints or expansion joints, unless otherwise indicated on the drawings. Where splices are required for continuity, reinforcement shall be lapped 48 bar diameters. A minimum clearance of 1/2 inch shall be maintained between reinforcement and interior faces of units.

3.8 CONTROL JOINTS

Control joints shall be provided as indicated and shall be constructed in accordance with the details shown on the drawings. The vertical mortar joint at control joint locations shall be continuous, including through all bond beams. This shall be accomplished by utilizing half blocks in alternating courses on each side of the joint. The control joint key shall be interrupted in courses containing continuous bond beam steel. In single wythe exterior masonry walls, the exterior control joints shall be raked to a depth of 3/4 inch.

3.9 POINTING AND CLEANING

After mortar joints have attained their initial set, but prior to hardening, mortar and grout daubs or splashings shall be completely removed from masonry-unit surfaces that will be exposed or painted. Before completion of the work, defects in joints of masonry to be exposed or painted shall be raked out as necessary, filled with mortar, and tooled to match existing joints. Immediately after grout work is completed, scum and stains which have percolated through the masonry work shall be removed using a high pressure stream of water and a stiff bristled brush. Masonry surfaces shall not be cleaned, other than removing excess surface mortar, until mortar in joints has hardened. Masonry surfaces shall be left clean, free of mortar daubs, dirt, stain, and discoloration, including scum from cleaning operations, and with tight mortar joints throughout. Metal tools

and metal brushes shall not be used for cleaning.

3.9.1 Concrete Masonry Unit Surfaces

Exposed concrete masonry unit surfaces shall be dry-brushed at the end of each day's work and after any required pointing, using stiff-fiber bristled brushes.

3.9.2 [Enter Appropriate Subpart Title Here]

3.10 PROTECTION

Facing materials shall be protected against staining. Top of walls shall be covered with nonstaining waterproof covering or membrane when work is not in progress. Covering of the top of the unfinished walls shall continue until the wall is completed.

3.11 TEST REPORTS

3.11.1 Field Testing of Mortar

At least two specimens of mortar shall be taken each day. A layer of mortar 1/2 to 5/8 inch thick shall be spread on the masonry units and allowed to stand for one minute. The specimens shall then be prepared and tested for compressive strength in accordance with ASTM C 780.

3.11.2 Field Testing of Grout

Field sampling and testing of grout shall be in accordance with the applicable provisions of ASTM C 1019. A minimum of two specimens of grout per day shall be sampled and tested. Each specimen shall have a minimum ultimate compressive strength of 2000 psi at 28 days.

3.11.3 Prism Tests

At least one prism test sample shall be made for each 5,000 square feet of wall but not less than three such samples shall be made for any building. Three prisms shall be used in each sample. Prisms shall be tested in accordance with ASTM E 447. Seven-day tests may be used provided the relationship between the 7- and 28-day strengths of the masonry is established by the tests of the materials used. Compressive strength shall not be less than 3000 psi at 28 days. If the compressive strength of any prism falls below the specified value by more than 500 psi, steps shall be taken to assure that the load-carrying capacity of the structure is not jeopardized. If the likelihood of low-strength masonry is confirmed and computations indicate that the load-carrying capacity may have been significantly reduced, tests of cores drilled, or prisms sawed, from the area in question may be required. In such case, three specimens shall be taken for each prism test more than 500 psi below the specified value. Masonry in the area in question shall be considered structurally adequate if the average compressive strength of three specimens is equal to at least 85 percent of the specified value, and if the compressive strength of no single specimen is less than 75 percent of the specified value. Additional testing of specimens extracted from locations represented by erratic core or prism strength test results shall be permitted.

-- End of Section --

This page was intentionally left blank for duplex printing.

SECTION TABLE OF CONTENTS

DIVISION 05 - METALS

SECTION 05500A

MISCELLANEOUS METAL

09/02

PART 1 GENERAL

1.1 REFERENCES
1.2 SUBMITTALS
1.3 GENERAL REQUIREMENTS
1.3.1 Metal Rail / Fence at Overlook
1.4 DISSIMILAR MATERIALS
1.5 WORKMANSHIP
1.6 ANCHORAGE
1.7 SHOP PAINTING

PART 2 PRODUCTS

PART 3 EXECUTION

3.1 GENERAL INSTALLATION REQUIREMENTS

-- End of Section Table of Contents --

SECTION 05500A

MISCELLANEOUS METAL
09/02

PART 1 GENERAL

1.1 REFERENCES

The publications listed below form a part of this specification to the extent referenced. The publications are referred to in the text by basic designation only.

AMERICAN SOCIETY FOR TESTING AND MATERIALS (ASTM)

ASTM A 123/A 123M	(2001; Rev. A) Zinc (Hot-Dip Galvanized) Coatings on Iron and Steel Products
ASTM A 283/A 283M	(2000) Low and Intermediate Tensile Strength Carbon Steel Plates
ASTM A 36/A 36M	(2000a) Carbon Structural Steel
ASTM A 467/A 467M	(1998) Machine and Coil Chain
ASTM A 500	(1999) Cold-Formed Welded and Seamless Carbon Steel Structural Tubing in Rounds and Shapes
ASTM A 53/A 53M	(2001) Pipe, Steel, Black and Hot-Dipped, Zinc-Coated, Welded and Seamless
ASTM A 653/A 653M	(2000) Steel Sheet, Zinc-Coated (Galvanized) or Zinc-Iron Alloy-Coated (Galvannealed) by the Hot-Dip Process

AMERICAN WELDING SOCIETY (AWS)

AWS D1.1	(2000) Structural Welding Code - Steel

1.2 SUBMITTALS

Government approval is required for submittals with a "G" designation; submittals not having a "G" designation are for information only. The following shall be submitted in accordance with Section 01330 SUBMITTAL PROCEDURES:

SD-02 Shop Drawings

Metal Rail / Fence at Overlook

Detail drawings indicating material thickness, type, grade, and class; dimensions; and construction details. Drawings shall include fabrication and anchoring details, manufacturer's descriptive data and installation instructions, and templates.

SD-03 Product Data
miscellaneous metal items

1.3 GENERAL REQUIREMENTS

1.3.1 Metal Rail / Fence at Overlook

Detail drawings indicating material thickness, type, grade, and class; dimensions; and construction details. Drawings shall include fabrication and anchoring details, manufacturer's descriptive data and installation instructions, and templates.

The Contractor shall verify all measurements and shall take all field measurements necessary before fabrication. Exposed fastenings shall be compatible materials, shall generally match in color and finish, and shall harmonize with the material to which fastenings are applied. Materials and parts necessary to complete each item, even though such work is not definitely shown or specified, shall be included. Poor matching of holes for fasteners shall be cause for rejection. Fastenings shall be concealed where practicable. Thickness of metal and details of assembly and supports shall provide strength and stiffness. Joints exposed to the weather shall be formed to exclude water.

1.4 DISSIMILAR MATERIALS

Where dissimilar metals are in contact, or where aluminum is in contact with concrete, mortar, masonry, wet or pressure-treated wood, or absorptive materials subject to wetting, the surfaces shall be protected with a coat of bituminous paint or asphalt varnish.

1.5 WORKMANSHIP

Miscellaneous metalwork shall be well formed to shape and size, with sharp lines and angles and true curves. Drilling and punching shall produce clean true lines and surfaces. Welding shall be continuous along the entire area of contact except where tack welding is permitted. Exposed connections of work in place shall not be tack welded. Exposed welds shall be ground smooth. Exposed surfaces of work in place shall have a smooth finish, and unless otherwise approved, exposed riveting shall be flush. Where tight fits are required, joints shall be milled. Corner joints shall be coped or mitered, well formed, and in true alignment. Work shall be accurately set to established lines and elevations and securely fastened in place. Installation shall be in accordance with manufacturer's installation instructions and approved drawings, cuts, and details.

1.6 ANCHORAGE

Anchorage shall be provided where necessary for fastening miscellaneous metal items securely in place. Anchorage not otherwise specified or indicated shall include slotted inserts made to engage with the anchors, expansion shields, and power-driven fasteners when approved for concrete; toggle bolts and through bolts for masonry; machine and carriage bolts for steel; and lag bolts and screws for wood.

1.7 SHOP PAINTING

Surfaces of ferrous metal except galvanized surfaces, shall be cleaned and shop coated with the manufacturer's standard protective coating unless otherwise specified. Surfaces of items to be embedded in concrete shall not be painted. Items to be finish painted shall be prepared according to manufacturer's recommendations or as specified.

PART 2 PRODUCTS

Not Used

PART 3 EXECUTION

3.1 GENERAL INSTALLATION REQUIREMENTS

All items shall be fabricated, finished, and installed per the drawings at the locations shown and according to the manufacturer's recommendations.

-- End of Section --

SECTION TABLE OF CONTENTS

DIVISION 11 - EQUIPMENT

SECTION 11211A

PUMPS: WATER, CENTRIFUGAL

PART 1 GENERAL

1.1 REFERENCES
1.2 GENERAL REQUIREMENTS
1.2.1 Standard Products
1.2.2 Description
1.2.3 Safety Requirements
1.2.4 Nameplates
1.2.5 Electrical Work
1.2.6 Selection Criteria
1.2.7 Conformance With Agency Requirements
1.2.8 Verification of Dimensions
1.2.9 Factory Tests
1.3 SUBMITTALS
1.4 DELIVERY AND STORAGE

PART 2 PRODUCTS

2.1 Centrifugal Pump System
2.2 MATERIALS AND EQUIPMENT
2.3 CENTRIFUGAL WATER PUMPS
2.3.1 Pump Service
2.3.2 Pump Drives
2.3.3 Pump Construction
2.3.4 Pump Characteristics
2.3.5 Pump Casings
2.3.6 Impellers
2.3.7 Shaft
2.3.8 Mechanical Seals
2.3.9 Couplings
2.3.10 Balance
2.3.11 Bearings
2.3.12 Cocks, Plugs, and Accessories
2.3.13 Piping Connections
2.3.14 Finish
2.4 ELECTRICAL EQUIPMENT
2.4.1 Electric Motors
2.4.2 Control Equipment
2.5 EQUIPMENT APPURTENANCES
2.5.1 Attachments
2.5.2 Equipment Guards
2.5.3 Tools
2.5.4 Shop Painting

PART 3 EXECUTION

3.1 INSTALLATION
3.2 TESTS
3.3 FIELD PAINTING
3.3.1 Touch-Up Painting
3.3.2 Exposed Ferrous Surfaces
3.4 MANUFACTURER'S REPRESENTATIVE
3.5 DEMONSTRATION

-- End of Section Table of Contents --

SECTION 11211A

PUMPS: WATER, CENTRIFUGAL

PART 1 GENERAL

1.1 REFERENCES

The publications listed below form a part of this specification to the extent referenced. The publications are referred to in the text by basic designation only.

AMERICAN SOCIETY FOR TESTING AND MATERIALS (ASTM)

ASTM A 123/A 123M	(2001; Rev. A) Zinc (Hot-Dip Galvanized) Coatings on Iron and Steel Products
ASTM A 153/A 153M	(2001; Rev. A) Zinc Coating (Hot-Dip) on Iron and Steel Hardware
ASTM A 307	(1997) Carbon Steel Bolts and Studs, 60, 000 PSI Tensile Strength
ASTM D 975	(1998b) Diesel Fuel Oils

ASME INTERNATIONAL (ASME)

ASME B1.1	(1989) Unified Inch Screw Threads (UN and UNR Thread Form)
ASME B16.1	(1998) Cast Iron Pipe Flanges and Flanged Fittings
ASME B16.5	(1996; B16.5a) Pipe Flanges and Flanged Fittings NPS 1/2 thru NPS 24
ASME B40.1	(1991) Gauges - Pressure Indicating Dial Type - Elastic Element

U.S. NATIONAL ARCHIVES AND RECORDS ADMINISTRATION (NARA)

47 CFR 15	Radio Frequency Devices

HYDRAULIC INSTITUTE (HI)

HI 1.1-1.5	(1994) Standards for Centrifugal Pumps

NATIONAL ELECTRICAL MANUFACTURERS ASSOCIATION (NEMA)

NEMA MG 1	(1998; Errata 1999) Motors and Generators

NATIONAL FIRE PROTECTION ASSOCIATION (NFPA)

NFPA 20	(1996; Errata Oct 1996; TIA 96-1) Installation of Centrifugal Fire Pumps
NFPA 30	(1996; Errata; TIA 96-2) Flammable and Combustible Liquids Code
NFPA 37	(1998) Installation and Use of Stationary Combustion Engines and Gas Turbines
NFPA 70	(2002) National Electrical Code

THE SOCIETY FOR PROTECTIVE COATINGS (SSPC)

SSPC Paint 21	(1991) White or Colored Silicone Alkyd Paint
SSPC Paint 25	(1991) Red Iron Oxide, Zinc Oxide, Raw Linseed Oil and Alkyd Primer (Without Lead and Chromate Pigments)

UNDERWRITERS LABORATORIES (UL)

UL 448	(1994; Rev thru May 1999) Pumps for Fire-Protection Service

1.2 GENERAL REQUIREMENTS

1.2.1 Standard Products

Material and equipment shall be the standard products of a manufacturer regularly engaged in the manufacture of such products and shall essentially duplicate equipment that has been in satisfactory waterworks operation at least 2 years prior to bid opening. Equipment shall be supported by a service organization that is, in the opinion of the Contracting Officer, reasonably convenient to the jobsite. Pumps and motors of the same types shall each be the product of one manufacturer.

1.2.2 Description

The pumps shall be centrifugal water pumps of the types indicated and specified. The driving units for the pumps shall be electric motors as indicated and specified.

1.2.3 Safety Requirements

Gears, couplings, projecting set-screws, keys, and other rotating parts, so located that any person can come in close proximity thereto, shall be fully enclosed or properly guarded.

1.2.4 Nameplates

Pumps and motors shall have a standard nameplate securely affixed in a conspicuous place showing the manufacturer's name, address, type or style, model, serial number, and catalog number. In addition, the nameplate for each pump shall show the capacity in gpm at rated speed in rpm and head in feet of water. Nameplate for each electric motor shall show at least the minimum information required by 10.38 NEMA MG 1. Such other information as the manufacturer may consider necessary to complete identification shall be shown on the nameplate.

1.2.5 Electrical Work

Electrical motor driven equipment specified herein shall be provided complete with motors, motor starters, and controls. Electrical characteristics shall be as indicated. Motor starters shall be provided complete with properly sized thermal overload protection in each phase and other appurtenances necessary for the motor control specified. Each motor shall be of sufficient capacity to drive the equipment at the specified capacity without exceeding the nameplate rating of the motor when operating at proper electrical system voltage and frequency. Manual or automatic control and protective or signal devices required for the operation herein specified and any control wiring required for controls and devices but not shown on electrical plans shall be provided under this section of the specifications.

1.2.6 Selection Criteria

Pumps shall be designed using hydraulic criteria based upon actual model developmental test data. Pumps shall be selected at a point within the maximum efficiency for a given impeller casing combination. Deviations within 3 percent of maximum efficiency are permissible, provided the lesser efficiency is not less than the scheduled efficiency. Pumps having impeller diameters larger than 90 percent of the published maximum diameter of the casing or less than 15 percent larger than the published minimum diameter of the casing will be rejected. Acceptable maximum impeller diameter calculations shall not be based on percentage of impeller diameter range for a given casing.

1.2.7 Conformance With Agency Requirements

Where materials or equipment are specified to be an approved type, the seal or label of approval from a nationally recognized testing agency, adequately equipped and competent to perform such services, shall be attached thereto. A written certificate from the testing agency shall accompany the materials or equipment and shall be submitted to the Contracting Officer stating that the items have been tested and that they conform to the applicable requirements of the specifications and to the standards listed herein. The certificate shall indicate the methods of testing used by the testing agency. In lieu of a certificate from a testing agency, published catalog specification data, accompanied by the manufacturer's certified statement to the effect that the items are in accordance with the applicable requirements of the specifications and the referenced standards, will be considered by the Contracting Officer and may

be acceptable as evidence that the items conform with agency requirements.

1.2.8 Verification of Dimensions

The Contractor shall become familiar with all details of the work, verify all dimensions in the field and shall advise the Contracting Officer of any discrepancy before performing the work.

1.2.9 Factory Tests

Pumps shall be tested by the manufacturer or a nationally recognized testing agency in compliance with Hydraulic Institute Standards. Where two or more identical pumps are specified, only one representative pump shall be tested. Certified test results shall be submitted to the Contracting Officer.

1.3 SUBMITTALS

Government approval is required for submittals with a "G" designation; submittals not having a "G" designation are for information only. The following shall be submitted in accordance with Section 01330 SUBMITTAL PROCEDURES:

SD-02 Shop Drawings

Installation:

Drawings containing complete wiring and schematic diagrams and any other details required to demonstrate that the system has been coordinated and will properly function as a unit. Drawings shall show proposed layout and anchorage of equipment and appurtenances, and equipment relationship to other parts of the work including clearances for maintenance and operation. A complete listing of equipment and materials shall be provided.

SD-03 Product Data

Materials and Equipment:

Manufacturer's descriptive data and technical literature, performance charts and curves for all impeller sizes for a given casing, catalog cuts, and installation instructions. Spare parts data for each different item of material and equipment specified, after approval of the detail drawings and not later than 2 months prior to the date of beneficial occupancy. Data shall include a complete list of parts and supplies, with current unit prices and source of supply.

Instructions:

Proposed diagrams, instructions, and other sheets, prior to posting. Approved wiring and control diagrams showing the complete layout of the entire system, including equipment, piping valves, and control sequence, framed under glass or in approved

laminated plastic, shall be posted where directed. Condensed operating instructions explaining preventive maintenance procedures, methods of checking the system for normal safe operation, and procedures for safely starting and stopping the system shall be prepared in typed form, framed as specified above for the wiring and control diagrams, and posted beside the diagrams. The framed instructions shall be posted before acceptance testing of the systems.

Training Period:

Training course curriculum and training instructions shall be furnished to the Contracting Officer 14 days prior to the start of training.

SD-06 Test Reports

Tests:

Test reports in booklet form showing all field tests performed to adjust each component and all field tests performed to prove compliance with the specified performance criteria, upon completion and testing of the installed system. Each test report shall indicate the final position of controls.

SD-10 Operation and Maintenance Data

MANUFACTURER'S REPRESENTATIVE

Centrifugal Pump System:

Six complete sets of instructions containing the manufacturer's operating and maintenance instructions for each piece of equipment. One complete set at the time the tests procedure is submitted; remaining sets before the contract is completed. Each set shall be permanently bound and shall have a hard cover. The following identification shall be inscribed on the covers: the words "OPERATING AND MAINTENANCE INSTRUCTIONS," name and location of the building, name of the Contractor, and contract number. Flysheets shall be placed before instructions covering each subject. Instruction sheets shall be approximately 8-1/2 by 11 inches, with large sheets of drawings folded in. Instructions shall include, but not be limited to, the following:

a. System layout showing piping, valves, and controls.

b. Approved wiring and control diagrams.

c. A control sequence describing startup, operation, and shutdown.

d. Operating and maintenance instructions for each piece of equipment, including lubrication instructions and troubleshooting guide.

e. Manufacturer's bulletins, cuts, and descriptive data; and parts list and recommended spare parts.

1.4 DELIVERY AND STORAGE

All equipment delivered and placed in storage shall be stored with protection from the weather, humidity and temperature variations, dirt and dust, or other contaminants.

PART 2 PRODUCTS

2.1 Centrifugal Pump System

Six complete sets of instructions containing the manufacturer's operating and maintenance instructions for each piece of equipment. One complete set at the time the tests procedure is submitted; remaining sets before the contract is completed. Each set shall be permanently bound and shall have a hard cover. The following identification shall be inscribed on the covers: the words "OPERATING AND MAINTENANCE INSTRUCTIONS," name and location of the building, name of the Contractor, and contract number. Flysheets shall be placed before instructions covering each subject. Instruction sheets shall be approximately 8-1/2 by 11 inches, with large sheets of drawings folded in. Instructions shall include, but not be limited to, the following:

a. System layout showing piping, valves, and controls.
b. Approved wiring and control diagrams.
c. A control sequence describing startup, operation, and shutdown.
d. Operating and maintenance instructions for each piece of equipment, including lubrication instructions and troubleshooting guide.
e. Manufacturer's bulletins, cuts, and descriptive data; and parts list and recommended spare parts.

2.2 MATERIALS AND EQUIPMENT

Materials and equipment shall be as specified below and as shown, and shall be suitable for the service intended. Materials and equipment shall be new and unused, except for tests. Where two or more pieces of equipment performing the same function are required, they shall be duplicate products of the same manufacturer.

2.3 CENTRIFUGAL WATER PUMPS

The pumps shall be the centrifugal type designed for waterworks service in the following configurations:

	Pump No.
Submersible	1
Submersible	2

2.3.1 Pump Service

The pumps shall be utilized for the following service:

	Pump No.
Recirculation	1, 2

2.3.2 Pump Drives

The pumps shall have the following driving units and shall be directly connected to the driving units through solid shafts, flexible couplings, or free wheeling clutches (as appropriate):

	Pump No.
Electric motor drive	1, 2

2.3.3 Pump Construction

Except as below specified, centrifugal water pumps shall be constructed in accordance with the Hydraulic Institute HI 1.1-1.5.

2.3.4 Pump Characteristics

Major pump components shall be of grey cast iron, ASTMA-48, Class 35B, with smooth surfaces devoid of blow holes or other irregularities. All exposed nuts or bolts shall be AISI type 304 stainless steel construction. All metal surfaces coming into contract with the pumpage, other than stainless steel or brass, shall be protected by a factory applied spray coating of acrylic dispersion zinc phosphate primer with a polyester resin paint finish on the exterior of the pump.

Sealing design shall incorporate metal-to-metal contact between machined surfaces. Critical mating surfaces where watertight sealing is required shall be machined and fitted with Nitrile or Viton rubber O-rings. Fittings will be the result of controlled compression of rubber O-rings in two planes and O-ring contact of four sides without the requirement of a specific torque limit.

Rectangular cross sectioned gaskets requiring specific torque limits to achieve compression shall not be considered as adequate or equal. No secondary sealing compounds, elipitcal O-rings, grease or other devices shall be used.

Pump	gpm at total discharge
1	1,000 gpm @ 20 ft
2	1,000 gpm @ 20 ft

Pumps shall operate at optimum efficiencies to produce the most economical pumping system under the conditions encountered and shall be sized to make optimum match with the system head curve as shown.

2.3.5 Pump Casings

Pump casings shall be of uniform quality and free from blowholes, porosity, hard spots, shrinkage defects, cracks and other injurious defects. Defects in casings shall not be repaired except when such work is approved and is done by or under the supervision of the pump manufacturer, and then only

when the defects are small and do not adversely affect the strength or use of the casing. Casings shall be single or double volute with flanged piping connections conforming to ASME B16.1, Class 125. The direction of shaft rotation shall be conspicuously indicated. The casing shall have tapped openings for air venting, priming, draining, and suction and discharge gauges. A brass or bronze umbrella or vent cock shall be furnished for venting except where automatic air vents are indicated. Drain openings in the volute, intake, or other passages capable of retaining trapped water shall be located in the low point of such passages.

2.3.6 Impellers

Impeller(s) shall be of gray cast iron, Class 35B, dynamically balanced, semi-open, multi-vane, backswept, non-clog design. The impeller vane leading edges shall be mechanically self-cleaned upon each rotation as they pass across a spiral groove located on the volute suction that shall keep them clear of debris, maintaining an unobstructed leading edge. The impeller(s) vanes shall have screw-shaped leading edges that are hardened to Rc 45 and shall be capable of handing solids, fibrous materials, heavy sludge and other matter found in waste water. The screw shape of the impeller inlet shall provide an inducing effect for the handling of sludge and rag-laden wastewater. Impellers shall be loced to the shaft and shall be coated with alkyd resin primer.

2.3.7 Shaft

Pump and motor shaft shall be the same unit. The pump shaft is an extension of the motor shaft. Couplings shall not be acceptable. The shaft shall be AISI type 431 stainless steel.

If a shaft material of lower quality than 431 stainless steel is used, a shaft sleeve of 431 stainless steel is used to protect the shaft material. However, shaft sleeves only protect the shaft around the lower mechanical seal. No protection is provided in the oil housing and above. Therefore, the used of stainless steel sleeves will not be considered equal to stainless steel shafts.

2.3.8 Mechanical Seals

Each pump shall be provided with a tandem mechanical shaft seal system consisting of two totally independent seal assemblies. The seals shall operate in a lubricant reservoir that hydrodynamically lubricates the lapped seal faces at a constant rate. The lower, primary seal unit, located between the pump and the lubricant chamber, shall contain one stationary and one positively driven rotating, corrosion resistant tungsten-carbide ring. The upper, secondary seal unit, located between the lubricant chamber and the motor housing, shall contain one stationary and one positively driven rotating, corrosion resistant tungsten-carbide seal ring. Each seal interface shall be held in contact by its own spring system. The seals shall require neither maintenance nor adjustment no depend on direction of rotation for sealing. The position of both mechanical seals shall depend on the shaft. Mounting of the lower mechanical seal on the impeller hub will not be acceptable. For special applications, other seal face materials shall be available.

The following seal types shall not be considered acceptable nor equal to the dual independent seal specified: shaft seals without positively driven rotating members, or conventional double mechanical seals containing either a common single or double spring acting between the upper and lower seal faces. A system requiring a pressure differential to offset pressure and to effect sealing shall be used.

Each pump shall be provided with a lubricant chamber for the shaft sealing system. The lubricant chamber shall be designed to prevent overfilling and to provide lubricant expansion capacity. The drain and inspection plug , with positive anti-leak seal shall be easily accessible from the outside. The seal system shall not rely upon the pumped media for lubrication. The motor shall be able to operated dry without damage while pumping under load. Seal lubricant shall be FDA Approved, nontoxic.

2.3.9 Couplings

Couplings shall be of the heavy-duty flexible type, keyed and locked to the shaft. The outside surface of the couplings for horizontal pumps and close-coupled vertical pumps shall be machined parallel to the axis of the shaft. The faces of the couplings shall be machined perpendicular to the axis of the shaft. Disconnecting the couplings shall be accomplished without removing the driver half or the pump half of the couplings from the shaft. Couplings for vertical pumps other than close-coupled vertical pumps may be of the universal type. Flexible couplings shall not be used to compensate for misalignment of pump.

2.3.10 Balance

All rotating parts of the equipment shall operate throughout the required range without excessive end thrust, vibration, or noise. Defects of this type that cannot be eliminated by installation adjustments will be sufficient cause for rejection of the equipment. Pump impeller assemblies shall be statically and dynamically balanced to within 1/2 percent of W times R squared, where W equals weight and R equals impeller radius. Shaft construction shall be substantial to prevent seal or bearing failure due to vibration. Total shaft peak-to-peak dynamic deflection measured by vibrometer at pump-seal face shall not exceed 2.0 mils under shutoff-head operating conditions. Flow from 1/4 inch iron pipe size (ips) pipe shall be provided during testing.

2.3.11 Bearings

The pump shaft shall rotate on two bearings. Motor bearings shall be permanently grease lubricated. The upper bearing shall be a single deep groove ball bearing. The lower bearing shall be a two row angular contact bearing to compensate for axial thrust and radial forces. Single row lower bearings are not acceptable.

2.3.12 Cocks, Plugs, and Accessories

The pumps shall be equipped with gauges indicating discharge pressures for all pumps. Gauges, equipped with a shutoff cock and snubber, shall conform

to ASME B40.1, and shall be calibrated in pounds per square inch in not more than 2 psi increments. Gauge ranges shall be appropriate for the particular installation. Normal operating suction and discharge pressures of the pump shall be indicated on the mid-point range of the gauges. Air release valves shall be furnished and installed where indicated.

2.3.13 Piping Connections

The pump suction and discharge shall be provided with flanged connections of suitable size and suitably arranged for piping shown. Pipe flanges shall conform to ASME B16.1 and ASME B16.5. Piping shall be installed to preclude the formation of air pockets. The pumps shall be automatically and firmly connected to the discharge connection, guided by no less than two guide bars extending from the tope of the station to the discharge connection. There shall be no need for personnel to enter the wet-well. Sealing of the pumping unit to the discharge connection shall be accomplished by a machined metal to metal watertight contract. Sealing of the discharge interface with a diaphragm, O-ring or profile gasket will not be acceptable. No portion of the pump shall bear directly on the sump floor.

2.3.14 Finish

Pump shall have painted or enameled finish as is standard with the manufacturer except that fire pumps shall be red in color.

Volute

The pump volute shall be of A48 Class 35B gray cast iron and shall have an integral spiral shaped cast groove(s) at the suction of the volute. The internal volute bottom or insert ring shall provide effective dealing between the pump volute and the multi-vane, semi-open impeller. The sharp spiral groove(s) shall provide the shearing edge(s) across which each impeller vane leading edge shall cross during its rotation in order to remain unobstructed. The clearance between the internal volute bottom and the impeller leading edges shall be adjustable.

Cable Entry Seal

The cable entry seal design shall preclude specific torque requirements to insure a watertight and submersible seal. The cable entry shall consist of a single cylindrical elastomer grommer, flanked by washers, all having a close tolerance fit against the cable outside diameter and the entry inside diameter and compressed by the body containing a strain relief function, separate from the function of sealing the cable. The assembly shall provide ease of changing the cable when necessary using the same entry seal. The cable entry junction chamber and motor shall be separated by a stator lead sealing gland or terminal board, which shall isolate the interior from foreign material gaining access through the pump top. Epoxies, silicones or other secondary sealing systems shall not be considered acceptable.

2.4 ELECTRICAL EQUIPMENT

Electrical motor driven equipment herein specified shall be provided complete with motors, motor starters, and controls. Motor controls, equipment, and wiring shall be in accordance with NFPA 70.

2.4.1 Electric Motors

The pump motor shall be a NEMA B design, induction type with a squirrel cage rotor, shell type design, housed in an air filled, watertight chamber. The stator windings shall be insulated with moisture resistant Class H insulation rated for 180°C. (356°F). The stator shall be insulated by the tickle impregnation method using Class H monomer-free polyester resin resulting in a winding fill factor of at least 95%. The stator shall be heat-shrink fitted into the cast iron stator housing. The use of multiple step dip and bake-type stator insulation process is not acceptable. The use of bolts, pins or other fastening devices requiring penetration of the stator housing is not acceptable. The motor shall be designed for continuous duty handling pumped media of 40°C (104°F) and capable of up to 15 evenly spaced starts per hour. The rotor bars and short circuit rings shall be made of cast aluminum. Thermal switches set to open at 125°C (260°F) shall be embedded in the stator lead coils to monitor the temperature of each phase winding. These thermal switches shall be used in conjunction with and supplemental to external motor overload protection and shall be connected to the control panel. An elastomer compression seal shall hermetically seal the junction chamber containing the terminal board from the motor. Connection between the cable conductors and stator leads shall be made with threaded compression type binding posts permanently affixed to a terminal board. The same manufacturer shall produce the motor and the pump.

The combined service factor (combined effect of voltage, frequency and specific gravity) shall be a minimum of 1.15. The motor shall have a voltage tolerance of plus or minus 10%. The motor shall be designed for operation up to 40°C (104°F) ambient and with a temperature rise not to exceed 80°C. A performance chart shall be provided upon request showing curves fro torque, current, power-factor, input/output kW and efficiency. This chart shall also include data on starting and on-load characteristics.

The power cable shall be sized according to the NEC and ICEA standards and shall be of sufficient length to reach the junction box without the need of any splices. The outer jacket of the cable shall be oil resistant chloroprene rubber. The motor and cable shall be capable of continuous submergence underwater without loss of watertight integrity to a depth of 65 feet.

The motor horsepower shall be adequate so the that pump is non-overloading throughout the entire pump performance curve from shut-off through run-out.

2.4.2 Control Equipment

Automatically controlled pumps shall have three-position "MANUAL-OFF-AUTOMATIC" selector switch in cover. Additional controls or protective devices shall be as indicated. A pump low-water cutoff shall be installed in the well and shall shut the pump off when the water level in

the well reaches the level shown.

All stators shall incorporate thermal switches in series to monitor the temperature of each phase winding. The thermal switches shall open at 125°C (260°F), stop the motor and activate an alarm.

A leakage sensor shall be available as an option to detect water in the stator chamber. The Float Leakage Sensor (FLS) is a small float switch used to detect the presence of water in the stator chamber. When activated, the FLS will stop the motor and send an alarm both local and/or remote. USE OF VOLTAGE SENSITIVE SOLID STATE SENSORS AND TRIP TEMERPATURE ABOVE 125°C (260°F) SHALL NOT BE ALLOWED.

The thermal switches and FLS shall be connected to a Mini CAS (Control and Status) monitoring unit. The Mini CAS shall be designed to be mounted in any control panel.

2.5 EQUIPMENT APPURTENANCES

2.5.1 Attachments

All necessary bolts, nuts, washers, bolt sleeves, and other types of attachments for the installation of the equipment shall be furnished with the equipment. Bolts shall conform to the requirements of ASTM A 307 and nuts shall be hexagonal of the same quality as the bolts used. Threads shall be clean-cut and shall conform to ASME B1.1. Bolts, nuts, and washers specified to be galvanized or not otherwise indicated or specified, shall be zinc coated after being threaded, by the hot-dip process conforming to ASTM A 153/A 153M as appropriate. Bolts, nuts, and washers specified or indicated to be stainless steel shall be Type 316.

2.5.2 Equipment Guards

Equipment driven by open shafts, belts, chains, or gears shall be provided with all-metal guards enclosing the drive mechanism. Guard shall be constructed of galvanized sheet steel or galvanized woven wire or expanded metal set in a frame of galvanized steel members. Guards shall be secured in position by steel braces or straps which will permit easy removal for servicing the equipment. The guards shall conform in all respects to all applicable safety codes and regulations.

2.5.3 Tools

A complete set of all special tools that may be necessary for the adjustment, operation, maintenance, and disassembly of all equipment shall be furnished. Special tools are considered to be those tools which because of their limited use are not normally available, but which are necessary for the particular equipment. Special tools shall be high-grade, smooth, forged, alloy, tool steel. One pressure grease gun for each type of grease required for motors engines shall also be furnished. All tools shall be delivered at the same time as the equipment to which they pertain. The Contractor shall properly store and safeguard such tools until completion of the work, at which time they shall be delivered to the Contracting Officer.

2.5.4 Shop Painting

All motors, pump casings, and similar parts of equipment customarily finished in the shop shall be thoroughly cleaned, primed, and given two finish coats of paint at the factory in accordance with the recommendations of the manufacturer. Ferrous surfaces not to be painted shall be given a shop coat of grease or other suitable rust-resistant coating.

PART 3 EXECUTION

3.1 INSTALLATION

Each pump shall be installed in accordance with the written instructions of the manufacturer.

3.2 TESTS

After installation of the pumping units and appurtenances is complete, operating tests shall be carried out to assure that the pumping installation operates properly. The Contractor shall make arrangements to have the manufacturer's representatives present when field equipment tests are made. Each pumping unit shall be given a running field test in the presence of the Contracting Officer for a minimum of 2 hours. Each pumping unit shall be operated at its rated capacity or such other point on its head-capacity curve selected by the Contracting Officer. The Contractor shall provide an accurate and acceptable method of measuring the discharge flow. For submersible pumping units, an insulation resistance test of the cable and the motor shall be conducted prior to installation of the pump, during installation of the pump, and after installation is complete. The resistance readings shall not be less than 10 megohms. Tests shall assure that the units and appurtenances have been installed correctly, that there is no objectionable heating, vibration, or noise from any parts, and that all manual and automatic controls function properly. If any deficiencies are revealed during any tests, such deficiencies shall be corrected and the tests shall be re-conducted.

3.3 FIELD PAINTING

Stainless steel, galvanized steel, and nonferrous surfaces shall not be painted.

3.3.1 Touch-Up Painting

Factory painted items requiring touching up in the field shall be thoroughly cleaned of all foreign material and shall be primed and topcoated with the manufacturer's standard factory finish.

3.3.2 Exposed Ferrous Surfaces

Exposed ferrous surfaces shall be painted with two coats of enamel paint conforming to SSPC Paint 21. Factory primed surfaces shall be solvent-cleaned before painting. Surfaces that have not been factory primed shall be prepared and primed with one coat of SSPC Paint 25 or in

accordance with the enamel paint manufacturer's recommendations.

3.4 MANUFACTURER'S REPRESENTATIVE

The Contractor shall obtain the services of a manufacturer's representative experienced in the installation, adjustment, and operation of the equipment specified. The representative shall supervise the installation, adjustment, and testing of the equipment. Up to 2 days service shall be provided at no expense to the Government.

3.5 DEMONSTRATION

Upon completion of the work and at a time designated by the Contracting Officer, the services of one or more competent engineers shall be provided by the Contractor for a training period of not less than 2 hours to instruct a representative of the Government in the operation and maintenance of equipment furnished under this section of the specifications. These field instructions shall cover all the items contained in the bound instructions.

-- End of Section --

SECTION TABLE OF CONTENTS

DIVISION 13 - SPECIAL CONSTRUCTION

SECTION 13405A

PROCESS CONTROL

PART 1 GENERAL

1.1 REFERENCES
1.2 CONTROL SYSTEM DESCRIPTION
1.2.1 Control System General Requirements
1.2.2 Control System Operation
1.2.3 Control System Points
1.2.4 Symbols, Definitions, and Abbreviations
1.3 SUBMITTALS

PART 2 PRODUCTS

2.1 Instrumentation and Control System
2.2 Meters and Sensors
2.3 Training Manual
2.4 Performance Verification Test (PVT)
2.5 GENERAL REQUIREMENTS
2.6 MONITORING AND CONTROL PARAMETERS
2.6.1 Level Instrumentation
2.6.1.1 Mercury Float Switch
2.7 CONTROL PANELS
2.7.1 Components
2.7.1.1 Enclosures
2.7.1.2 Standard Indicator Light
2.7.1.3 Selector Switches
2.7.1.4 Push Buttons
2.7.1.5 Relays
2.7.1.6 Terminal Blocks
2.7.2 Panel Assembly
2.7.3 Electrical Requirements
2.7.4 Grounding

PART 3 EXECUTION

3.1 Instrumentation and Control System
3.2 EQUIPMENT INSTALLATION REQUIREMENTS
3.2.1 Installation
3.2.1.1 Device Mounting
3.2.2 Sequences of Operation
3.3 INSTALLATION OF EQUIPMENT
3.3.1 Control Panels
3.3.2 Level Instruments
3.3.2.1 Mercury Float Switches

3.3.3 Enclosures
3.4 WIRE, CABLE AND CONNECTING HARDWARE
3.4.1 Metering and Sensor Wiring
3.4.1.1 Power Line Surge Protection
3.4.1.2 Sensor and Control Wiring Surge Protection
3.5 FIELD TESTING AND ADJUSTING EQUIPMENT
3.5.1 Testing, Adjusting and Commissioning
3.5.2 Performance Verification Test (PVT)
3.6 FIELD TRAINING
3.6.1 Preliminary Operator Training

-- End of Section Table of Contents --

SECTION 13405A

PROCESS CONTROL

PART 1 GENERAL

1.1 REFERENCES

The publications listed below form a part of this specification to the extent referenced and are referred to in the text by the basic designation only.

AMERICAN NATIONAL STANDARDS INSTITUTE (ANSI)

ANSI C12.1	(1995) Code for Electricity Metering
ANSI X3.64	(1979; R 1990) Additional Controls for Use with the American National Standard Code for Information Interchange
ANSI X3.154	(1988; R 1994) Office Machines and Supplies - Alphanumeric Machines-Keyboard Arrangement

AMERICAN SOCIETY FOR TESTING AND MATERIALS (ASTM)

ASTM A 536	(1984; R 1999el) Ductile Iron Castings
ASTM B 88	(1999) Seamless Copper Water Tube
ASTM B 88M	(1999) Seamless Copper Water Tube (Metric)
ASTM D 635	(1998) Rate of Burning and/or Extent and Time of Burning of Self-Supporting Plastics in a Horizontal Position
ASTM D 638	(1999) Tensile Properties of Plastics
ASTM D 792	(1998) Density and Specific Gravity (Relative Density) of Plastics by Displacement
ASTM D 1238	(1999) Flow Rates of Thermoplastics by Extrusion Plastometer
ASTM D 1693	(2000) Environmental Stress-Cracking of Ethylene Plastics
ASTM D 2000	(1999) Rubber Products in Automotive Applications

AMERICAN SOCIETY OF HEATING, REFRIGERATING AND AIR-CONDITIONING ENGINEERS (ASHRAE)

ASHRAE Hdbk-IP	(1997) Handbook, Fundamentals I-P Edition

AMERICAN WATER WORKS ASSOCIATION (AWWA)

AWWA C606	(1997) Grooved and Shouldered Joints

ASME INTERNATIONAL (ASME)

ASME FM	(1971; Sixth Edition) Fluid Meters Their Theory and Application
ASME B31.8	(1995) Gas Transmission and Distribution Piping Systems
ASME BPVC SEC VIII D1	(1998) Boiler and Pressure Vessel Code; Section VIII, Pressure Vessels Division I - Basic Coverage

U.S. NATIONAL ARCHIVES AND RECORDS ADMINISTRATION (NARA)

40 CFR 60	Standards of Performance for New Stationary Sources
47 CFR 15	Radio Frequency Devices
47 CFR 68	Connection of Terminal Equipment to the Telephone Network

ELECTRONIC INDUSTRIES ALLIANCE (EIA)

EIA ANSI/EIA/TIA-232-F	(1997) Interface Between Data Terminal Equipment and Data Circuit-Terminating Equipment Employing Serial Binary Data Interchange

INSTITUTE OF ELECTRICAL AND ELECTRONICS ENGINEERS (IEEE)

IEEE C37.90	(1989; R 1994) Relays and Relay Systems Associated with Electric Power Apparatus
IEEE C37.90.1	(1989; R 1994) IEEE Standard Surge Withstand Capability (SWC) Tests for Protective Relays and Relay Systems
IEEE C62.41	(1991; R 1995) Surge Voltages in Low-Voltage AC Power Circuits
IEEE Std 100	(1997) IEEE Standard Dictionary of Electrical and Electronic Terms

IEEE Std 142	(1991) IEEE Recommended Practice for Grounding of Industrial and Commercial Power Systems
IEEE Std 8802-3	(2000) Information Technology - Telecommunications and Information Exchange Between Systems - Specific Requirements - Amendment to Local and Metropolitan Area Networks - Carrier Sense Multiple Access with Collision Detection (CSMA/CD) Access Method and Physical Layer Specifications Aggregation of Multiple Link
IEEE Std 8802-4	(1990) Information Processing Systems - Local Area Networks - Part 4: Token-Passing Bus Access Method and Physical Layer Specifications

INTERNATIONAL ELECTROTECHNICAL COMMISSION (IEC)

IEC 61131-3	(1993) Programmable Controllers - Part 3: Programming Languages

INTERNATIONAL TELECOMMUNICATION UNION (ITU)

ITU V.34	(1994) Data Communication Over the Telephone Network - A Modem Operating at Data Signaling Rates of up to 28,800 bits for use on the General Switched Telephone Network and on leased Point-to-Point Two-Wire Telephone Type Circuits.
ITU V.42 bis	(1990) Data Compression Procedures for Data Circuit Terminating Equipment (DCE) Using Error Correction Procedures

INSTRUMENT SOCIETY OF AMERICA (ISA)

ISA MC96.1	(1982) Temperature Measurement Thermocouples
ISA S7.0.01	(1996) Quality Standards for Instrument Air

NATIONAL ELECTRICAL MANUFACTURERS ASSOCIATION (NEMA)

NEMA ICS 1	(1993) Industrial Control and Systems
NEMA ICS 2	(2000) Industrial Control and Systems Controllers, Contactors, and Overload Relays, Rated Not 600 Volts
NEMA ICS 3	(1993) Industrial Control and Systems Factory Built Assemblies

NEMA ICS 4	(1997) Industrial Control and Systems Terminal Blocks
NEMA 250	(1997) Enclosures for Electrical Equipment (100 Volts Maximum)

NATIONAL FIRE PROTECTION ASSOCIATION (NFPA)

NFPA 70	(2002) National Electrical Code

NATIONAL INSTITUTE OF STANDARDS AND TECHNOLOGY (NIST)

NIST SP 250	(1995) Calibration Service Users Guide

UNDERWRITERS LABORATORIES (UL)

UL 94	(1996; Rev thru Jul 1998) Tests for Flammability of Plastic Materials for Parts in Devices and Appliances
UL 508	(1999) Industrial Control Equipment
UL 1059	(1993; 3rd Edition) Terminal Blocks

1.2 CONTROL SYSTEM DESCRIPTION

The process instrumentation and control system shall be used to monitor and control the operation of process equipment as specified and in accordance with the sequence of control and control schematics shown on the drawings. The control system shall provide for operator interaction, overall control system supervision, and process equipment control and monitoring. The Contractor shall provide hardware configured and sized to support expansion as specified and shown on the drawings.

1.2.1 Control System General Requirements

The control system shall consist of a pond level control panel and all associated wiring, sensors and solenoid valves.

1.2.2 Control System Operation

The control system provided under this specification shall operate using direct digital control (DDC) algorithms or ladder logic type and supervisory control to provide the required sequences of operation. Input data to the controller shall be obtained by using instruments and controls interfaced to mechanical, electrical, utility systems and other systems as shown and specified. All required setpoints, settings, alarm limits, and sequences of operation shall be as identified in the settings tables and sequences of operation shown on the drawings. The number and location of control panels shown on drawings shall be provided as a minimum.

1.2.3 Control System Points

Inputs to and outputs from the control system shall be in accordance with

the Input/Output (I/O) Summary Table shown on the drawings. Each connected analog output (AO), analog input (AI), digital output (DO), digital input (DI), pulse accumulator (PA) input and other input or output device connected to the control system shall represent a "point" where referred to in this specification.

1.2.4 Symbols, Definitions, and Abbreviations

Symbols, definitions, and engineering unit abbreviations shall conform to IEEE Std 100, as applicable.

1.3 SUBMITTALS

Government approval is required for submittals with a "G" designation; submittals not having a "G" designation are for information only. The following shall be submitted in accordance with Section 01330 SUBMITTAL PROCEDURES:

SD-02 Shop Drawings

Installation and Wiring

Detail drawings containing complete piping, wiring, schematic, flow diagrams and any other details required to demonstrate that the system has been coordinated and will properly function as a unit. Piping and Instrumentation (P&ID) drawings prepared using industry recognized device symbols, clearly defined and describing piping designations to define the service and materials of individual pipe segments and instrument tags employing Instrument Society of America suggested identifiers.

SD-03 Product Data

Instrumentation and Control System

Manufacturer's descriptive and technical literature, performance charts and installation instructions. Product specific catalog cuts shall be in booklet form, indexed to the unique identifiers, and shall consist of data sheets that document compliance with the specification. Where multiple components are shown on a catalog cut, the application specific component shall be marked.

Meters and Sensors

Manufacturer's descriptive and technical literature, catalog cuts, performance charts and installation instructions.

Training Manual

Instruction manual.

Performance Verification Test (PVT)

The performance verification test procedure; it shall refer to the actions and expected results to demonstrate that the control system performs in accordance with the sequence of control. A list of the equipment to be used during the testing shall be included. The list shall also include manufacturer's name, model number, equipment function, the date of the latest calibration and the results of the latest calibration.

SD-10 Operation and Maintenance Data

Instrumentation and Control System
Six complete copies of operating instructions outlining the step-by-step procedures required for system startup, operation and shutdown. The instructions shall include layout, wiring and control diagrams of the system as installed. The instructions shall include the manufacturer's name, model number, service manual, parts list and a brief description of all equipment and their basic operating features.

PART 2 PRODUCTS

2.1 Instrumentation and Control System

Manufacturer's descriptive and technical literature, performance charts and installation instructions. Product specific catalog cuts shall be in booklet form, indexed to the unique identifiers, and shall consist of data sheets that document compliance with the specification. Where multiple components are shown on a catalog cut, the application specific component shall be marked.

2.2 Meters and Sensors

Manufacturer's descriptive and technical literature, catalog cuts, performance charts and installation instructions.

2.3 Training Manual

Instruction manual.

2.4 Performance Verification Test (PVT)

The performance verification test procedure; it shall refer to the actions and expected results to demonstrate that the control system performs in accordance with the sequence of control. A list of the equipment to be used during the testing shall be included. The list shall also include manufacturer's name, model number, equipment function, the date of the latest calibration and the results of the latest calibration.

2.5 GENERAL REQUIREMENTS

Equipment located outdoors, not provided with climate controlled enclosure,

shall be capable of operating in the ambient temperature range of 0 to 120 degrees Fahrenheit. Electrical equipment will conform to Section 16415 ELECTRICAL WORK, INTERIOR. Equipment and wiring must be in accordance with NFPA 70, with proper consideration given to environmental conditions such as moisture, dirt, corrosive agents, and hazardous area classification.

2.6 MONITORING AND CONTROL PARAMETERS

The control system shall be complete including sensors, field preamplifiers, signal conditioners, offset and span adjustments, amplifiers, transducers, transmitters, control devices, engineering units conversions and algorithms for the applications; and shall maintain the specified end-to-end process control loop accuracy from sensor to display and final control element. Control equipment shall be powered by a 120 vAc, single phase, 60 Hz power source, with local transformers included as needed for signal transmission and subsystem operation. Connecting conductors shall be suitable for installed service. Enclosures shall be rated for NEMA 3R.

2.6.1 Level Instrumentation

2.6.1.1 Mercury Float Switch

Float switch assemblies for use in liquid systems shall consist of wall bracket or mounting plate, galvanized steel rods, stainless steel bolts, explosion proof and corrosion resistant housing, and intrinsically safe relays. Each switch shall consist of two normally open mercury switches, encapsulated in epoxy resin. The float casing shall be polypropylene. The switch cable shall be oil resistant thermoplastic cable with 4 No. 18 gauge stranded copper conductors, rated for 600 Volt application.

2.7 CONTROL PANELS

2.7.1 Components

2.7.1.1 Enclosures

The enclosure for each control panel shall conform to the requirements of NEMA 250 for the types specified. Finish color shall be the manufacturer's standard, unless otherwise indicated. Damaged surfaces shall be repaired and refinished using original type finish. Enclosures for installation in mechanical equipment rooms shall be Type 4; those for installation in clean, dry indoor occupied space may be Type 1; other locations shall be as otherwise specified or shown. Enclosures for equipment installed outdoors shall be Type 3R or as shown. Enclosures for installation in a corrosive environment shall be Type 4X and shall be constructed of stainless steel, fiberglass, or polymer plastic. Painted steel shall not be allowed for use in a corrosive environment. Enclosure shall be provided with a single, continuously hinged exterior door with print pocket, 3-point latching mechanism and key lock and a single, continuously hinged interior door.

2.7.1.2 Standard Indicator Light

Indicator lights shall comply with NEMA ICS 1, NEMA ICS 2 and UL 508.

Lights shall be heavy duty, round and shall mount in a 0.875 inch mounting hole. Indicator lights shall be LED type and shall operate at 120 vAc or 24 vDc. Long life bulbs shall be used. Indicator light shall be provided with a legend plate labeled as shown on the drawings. Lens color shall be as indicated on the drawings. Lights shall be push to test (lamp) type.

2.7.1.3 Selector Switches

Selector switches shall comply with NEMA ICS 1, NEMA ICS 2 and UL 508. Selector switches shall be heavy duty, round and shall mount in a 0.875 inch mounting hole. The number of positions shall be as indicated on the drawings. Switches shall be as indicted of the drawings. Switches shall be rated for 600 volts, 10 amperes continuous. Selector switches shall be provided with a legend plate labeled as shown on the drawings. Where indicated or required, dual auxiliary contacts shall be provided for the automatic position to provide position sensing at the central station or workstation. Auxiliary contacts shall be rated for 120 vAc, 1A as a minimum. Where indicated on the drawings, switches shall be key operated. All keys shall be identical.

2.7.1.4 Push Buttons

Push buttons shall comply with NEMA ICS 1, NEMA ICS 2 and UL 508. Push buttons shall be heavy duty, round and shall mount in a 0.875 inch mounting hole. The number and type of contacts shall be as indicated on the drawings or required by the Sequence of Control. Push buttons shall be rated for 600 volts, 10 amperes continuous. Push buttons shall be provided with a legend plate labeled as shown on the drawings.

2.7.1.5 Relays

Relays shall comply with IEEE C37.90. Relays shall be as required by the Sequence of Control. Relay coil shall be 120 vAc and shall be provided with matching mounting socket. Power consumption shall not be greater than 3 watts.

2.7.1.6 Terminal Blocks

Terminal blocks shall comply with NEMA ICS 4 and UL 1059. Terminal blocks for conductors exiting control panels shall be two-way type with double terminals, one for internal wiring connections and the other for external wiring connections. Terminal blocks shall be made of bakelite or other suitable insulating material with full deep barriers between each pair of terminals. A terminal identification strip shall form part of the terminal block and each terminal shall be identified by a number in accordance with the numbering scheme on the approved wiring diagrams.

2.7.2 Panel Assembly

Control panels shall be factory assembled and shipped to the jobsite as a single unit. Panels shall be fabricated as indicated and devices shall be mounted as shown or required. Each panel shall be fabricated as a bottom-entry connection point for control system wiring.

2.7.3 Electrical Requirements

Each panel shall be powered by a dedicated 120VAC circuit.

2.7.4 Grounding

Control panel enclosures shall be equipped with a solid copper ground bus or equivalent. The ground bus shall be securely anchored to the enclosure so as to effectively ground the entire structure. Clamp-type terminals sized large enough to carry the maximum expected current shall be provided on the ground bus for grounding cables. Where a definite circuit ground is required, a single wire not less than #10 AWG shall run independently to the panel ground bus and shall be fastened to the ground bus with a bolted terminal lug. Cases of instruments, relays and other devices shall be effectively grounded through the enclosures steel structure unless otherwise indicated. Insulated wiring having a continuous rated current of not less than the circuit fuse rating shall be used for grounding. Grounding terminals of power receptacles shall be solidly grounded to the panel enclosure.

PART 3 EXECUTION

3.1 Instrumentation and Control System

Six complete copies of operating instructions outlining the step-by-step procedures required for system startup, operation and shutdown. The instructions shall include layout, wiring and control diagrams of the system as installed. The instructions shall include the manufacturer's name, model number, service manual, parts list and a brief description of all equipment and their basic operating features.

3.2 EQUIPMENT INSTALLATION REQUIREMENTS

3.2.1 Installation

Installation and The Contractor shall install system components and appurtenances in accordance with the manufacturer's instructions and shall provide necessary interconnections, services, and adjustments required for a complete and operable system. Instrumentation and communication equipment and cable grounding shall be installed as necessary to preclude ground loops, noise, and surges from adversely affecting system operation. The Contractor shall adjust or replace devices not conforming to the required accuracies. Factory sealed devices shall be replaced (rather than adjusted). Wiring in exposed areas, including low voltage wiring, shall be installed in metallic raceways or EMT conduit as specified in Section 16415 ELECTRICAL WORK, INTERIOR. Wiring in air plenum areas installed without conduit shall be plenum-rated per NFPA 70.

3.2.1.1 Device Mounting

Devices shall be installed in accordance with manufacturers' recommendations and as shown. Control devices to be installed in piping shall be provided with required gaskets, flanges, thermal compounds, insulation, piping, fittings, and manual valves for shutoff, equalization, purging, and calibration. Any deviations shall be documented by the Contractor and submitted to the Government for approval prior to mounting. Damaged insulation shall be replaced or repaired after devices are installed to match existing work. Damaged galvanized surfaces shall be repaired by touching up with zinc paint.

3.2.2 Sequences of Operation

The Contractor shall study the operation and sequence of local equipment controls, as a part of the conditions report, and note any deviations from the described sequences of operation on the contract drawings. The Contractor shall make necessary adjustments to make the equipment operate in an optimum manner and shall fully document changes made.

3.3 INSTALLATION OF EQUIPMENT

The Contractor shall install equipment as specified, as shown and as required in the manufacturer's instructions for a complete and fully operational control system.

3.3.1 Control Panels

Control panels shall be located as indicated on the drawings. Devices located in the control panels shall be as shown on the drawings or as needed to provide the indicated control sequences.

3.3.2 Level Instruments

3.3.2.1 Mercury Float Switches

Switches shall be mounted in accordance with manufacturer's published instructions. Procedures shall be those used for equipment in hazardous locations.

3.3.3 Enclosures

All enclosure penetrations shall be from the bottom of the enclosure, and shall be sealed to preclude entry of water using a silicone rubber sealant.

3.4 WIRE, CABLE AND CONNECTING HARDWARE

3.4.1 Metering and Sensor Wiring

Metering and sensor wiring shall be installed in accordance with the requirements of ANSI C12.1, NFPA 70, Section 16375 ELECTRICAL DISTRIBUTION, UNDERGROUND.

3.4.1.1 Power Line Surge Protection

Control panels shall be protected from power line surges. Protection shall meet the requirements of IEEE C62.41. Fuses shall not be used for surge protection.

3.4.1.2 Sensor and Control Wiring Surge Protection

Digital and analog inputs shall be protected against surges induced on control and sensor wiring. Digital and analog outputs shall be protected against surges induced on control and sensor wiring installed outdoors and as shown. Fuses shall not be used for surge protection. The inputs and outputs shall be tested in both the normal and common mode using the following two waveforms: The first waveform shall be 10 microseconds by 1000 microseconds with a peak voltage of 1500 volts and a peak current of 60 amperes. The second waveform shall be 8 microseconds by 20 microseconds with a peak voltage of 1000 volts and a peak current of 500 amperes.

3.5 FIELD TESTING AND ADJUSTING EQUIPMENT

The Contractor shall provide personnel, equipment, instrumentation, and supplies necessary to perform site testing. The Government will witness the PVT, and written permission shall be obtained from the Government before proceeding with the testing. Original copies of data produced, including results of each test procedure, during PVT shall be turned over to the Government at the conclusion of each phase of testing prior to Government approval of the test. The test procedures shall cover actual equipment and functions specified for the project.

3.5.1 Testing, Adjusting and Commissioning

After successful completion of the factory test as specified, the Contractor will be authorized to proceed with the installation of the system equipment, hardware, and software. Once the installation has been completed, the Contractor shall test, adjust, and commission each control loop and system in accordance with NIST SP 250 and shall verify proper operation of each item in the sequences of operation, including hardware and software. The Contractor shall calibrate field equipment, including control devices, adjust control parameters and logic (virtual) points including control loop setpoints, gain constants, constraints, and verify data communications before the system is placed online. Ground rods installed by the Contractor shall be tested as specified in IEEE Std 142. The Contractor shall calibrate each instrumentation device connected to the control system control network by making a comparison between the reading at the device and the display at the workstation, using a standard at least twice as accurate as the device to be calibrated. The Contractor shall check each control point within the control system control network by making a comparison between the control command at the central station and field-controlled device. The Contractor shall deliver trend logs/graphs of all points showing to the Government that stable control has been achieved. Points on common systems shall be trended simultaneously. One log shall be provided showing concurrent samples taken once a minute for a total of 4 hours. One log shall be provided showing concurrent samples taken once every 30 minutes, for a total of 24 hours. The Contractor shall verify operation of systems in the specified failure modes upon Control system network failure or loss of power, and verify that systems return to control

system control automatically upon a resumption of control system network operation or return of power. The Contractor shall deliver a report describing results of functional tests, diagnostics, calibrations and commissioning procedures including written certification to the Government that the installed complete system has been calibrated, tested, adjusted and commissioned and is ready to begin the PVT. The report shall also include a copy of the approved PVT procedure.

3.5.2 Performance Verification Test (PVT)

The Contractor shall prepare test procedures for the PVT. The test procedure shall describe all tests to be performed and other pertinent information such as specialized test equipment required and the length of the PVT. The test procedures shall explain, in detail, step-by-step actions and the expected results, to demonstrate compliance with all the requirements of the drawings and this specification. The test procedure shall be site specific and based on the inputs and outputs, required calculated points and the sequence of control. The Contractor shall demonstrate that the completed Control system complies with the contract requirements. All physical and functional requirements of the project including communication requirements shall be demonstrated and shown. The Contractor shall demonstrate that each system operates as required in the sequence of operation. The PVT as specified shall not be started until after receipt by the Contractor of written permission by the Government, based on the Contractor's written report including certification of successful completion of testing, adjusting and commissioning as specified, and upon successful completion of training as specified. Upon successful completion of the PVT, the Contractor shall deliver test reports and other documentation as specified to the Government.

3.6 FIELD TRAINING

Field training oriented to the specific system shall be provided for designated personnel. A copy of the training manual for each trainee plus two additional copies shall be delivered to the Contracting Officer. Manuals shall include an agenda, the defined objectives for each lesson, and a detailed description of the subject matter for each lesson. The Contractor shall furnish audiovisual equipment and other training supplies and materials. Copies of the audiovisuals shall be delivered with the printed training manuals. The Government reserves the right to videotape training sessions for later use. A training day is defined as 8 hours of classroom instruction, excluding lunchtime, Monday through Friday, during the daytime shift in effect at the training facility. Approval of the Contractor's training schedule shall be obtained from the Government at least 30 days before the training.

3.6.1 Preliminary Operator Training

Prior to the start of field testing, preliminary operator training shall be taught at the project site. Upon completion of this course, each student, using appropriate documentation, should be able to perform elementary operations with guidance and describe the general hardware architecture and functionality of the system. This course shall include: general system architecture; functional operation of the system, including workstations;

operator commands; application programs, control sequences, and control loops; database entry and modification; reports generation; alarm reporting; diagnostics; and historical files.

-- End of Section --

This page was intentionally left blank for duplex printing.

SECTION TABLE OF CONTENTS

DIVISION 16 - ELECTRICAL

SECTION 16050N

BASIC ELECTRICAL MATERIALS AND METHODS

PART 1 GENERAL

1.1 REFERENCES
1.2 RELATED REQUIREMENTS
1.3 DEFINITIONS
1.4 ELECTRICAL CHARACTERISTICS
1.5 SUBMITTALS
1.5.1 Manufacturer's Catalog Data
1.5.2 Drawings
1.5.3 Instructions
1.5.4 Certificates
1.5.4.1 Reference Standard Compliance
1.5.4.2 Independent Testing Organization Certificate
1.5.5 Operation and Maintenance Manuals
1.5.5.1 Operating Instructions
1.6 QUALITY ASSURANCE
1.6.1 Material and Equipment Qualifications
1.6.2 Regulatory Requirements
1.6.3 Alternative Qualifications
1.6.4 Service Support
1.6.5 Manufacturer's Nameplate
1.6.6 Modification of References
1.6.7 Material and Equipment Manufacturing Date
1.7 POSTED OPERATING INSTRUCTIONS
1.8 NAMEPLATES
1.9 CABLE TAGS IN MANHOLES, HANDHOLES, AND VAULTS
1.9.1 Polyethylene Cable Tags
1.9 ELECTRICAL REQUIREMENTS
1.10 Motors and Equipment
1.10.1 Wiring and Conduit
1.10.2 Three-Phase Motor Protection
1.11 INSTRUCTION TO GOVERNMENT PERSONNEL (not used)
1.12 LOCKOUT REQUIREMENTS

PART 2 PRODUCTS (not used)

PART 3 EXECUTION

3.1 PAINTING OF EQUIPMENT
3.1.1 Factory Applied
3.1.2 Field Applied
3.2 NAMEPLATE MOUNTING

3.3 WARNING SIGN MOUNTING
3.4 CABLE TAG INSTALLATION

-- End of Section Table of Contents --

SECTION 16050N

BASIC ELECTRICAL MATERIALS AND METHODS

PART 1 GENERAL

1.1 REFERENCES

The publications listed below form a part of this specification to the extent referenced. The publications are referred to in the text by the basic designation only.

AMERICAN SOCIETY FOR TESTING AND MATERIALS (ASTM)

ASTM D 709	(2000) Laminated Thermosetting Materials

U.S. NATIONAL ARCHIVES AND RECORDS ADMINISTRATION (NARA)

29 CFR 1910.147	Control of Hazardous Energy (Lock Out/Tag Out)

INSTITUTE OF ELECTRICAL AND ELECTRONICS ENGINEERS (IEEE)

IEEE Std 100	(1997) IEEE Dictionary of Electrical and Electronics Terms
IEEE C2	(2002) National Electrical Safety Code (ANSI/IEEE)

NATIONAL ELECTRICAL MANUFACTURERS ASSOCIATION (NEMA)

NEMA C57.12.28	(1999) Pad-Mounted Equipment - Enclosure Integrity (Revision of ANSI C57.12.28-88)
NEMA ICS 6	(1993; R 2001) Industrial Control and Systems Enclosures
NEMA MG 1	(1998; Errata 1999) Motors and Generators
NEMA MG 10	(1994) Energy Management Guide for Selection and Use of Fixed Frequency Medium AC Squirrel-Cage Polyphase Induction Motors
NEMA MG 11	(1977; R 1992) Energy Management Guide for Selection and Use of Single-Phase Motors

NATIONAL FIRE PROTECTION ASSOCIATION (NFPA)

NFPA 70	(2002) National Electrical Code

1.2 RELATED REQUIREMENTS

This section applies to all sections of Division 16, "Electrical," of this project specification unless specified otherwise in the individual sections.

1.3 DEFINITIONS

a. Unless otherwise specified or indicated, electrical and electronics terms used in these specifications, and on the drawings, shall be as defined in IEEE Std 100.

b. The technical sections referred to herein are those specification sections that describe products, installation procedures, and equipment operations and that refer to this section for detailed description of submittal types.

c. The technical paragraphs referred to herein are those paragraphs in PART 2 - PRODUCTS and PART 3 - EXECUTION of the technical sections that describe products, systems, installation procedures, equipment, and test methods.

1.4 ELECTRICAL CHARACTERISTICS

Electrical characteristics for this project shall be 480Y/277V primary, three phase, four wire, 60 Hz, and 240/120 volts secondary, single phase, three wire.

1.5 SUBMITTALS

Submittals required in the sections which refer to this section shall conform to the requirements of Section 01330, "Submittal Procedures" and to the following additional requirements. Submittals shall include the manufacturer's name, trade name, place of manufacture, catalog model or number, nameplate data, size, layout dimensions, capacity, project specification and technical paragraph reference. Submittals shall also include applicable federal, military, industry, and technical society publication references, and years of satisfactory service, and other information necessary to establish contract compliance of each item to be provided. Photographs of existing installations are unacceptable and will be returned without approval.

1.5.1 Manufacturer's Catalog Data

Submittals for each manufactured item shall be current manufacturer's descriptive literature of cataloged products, equipment drawings, diagrams, performance and characteristic curves, and catalog cuts. Handwritten and typed modifications and other notations not part of the manufacturer's preprinted data will result in the rejection of the submittal. Should manufacturer's data require supplemental information for clarification, the supplemental information shall be submitted as specified for certificates of compliance.

1.5.2 Drawings

Submit drawings a minimum of 14 by 20 inches in size using a minimum scale of 1/8 inch per foot. Include wiring diagrams and installation details of equipment indicating proposed location, layout and arrangement, control panels, accessories, piping, ductwork, and other items that must be shown to ensure a coordinated installation. Wiring diagrams shall identify circuit terminals and indicate the internal wiring for each item of equipment and the interconnection between each item of equipment. Drawings shall indicate adequate clearance for operation, maintenance, and replacement of operating equipment devices.

1.5.3 Instructions

Where installation procedures or part of the installation procedures are required to be in accordance with manufacturer's instructions, submit printed copies of those instructions prior to installation. Installation of the item shall not proceed until manufacturer's instructions are received. Failure to submit manufacturer's instructions shall be cause for rejection of the equipment or material.

1.5.4 Certificates

Submit manufacturer's certifications as required for products, materials, finishes, and equipment as specified in the technical sections. Certificates from material suppliers are not acceptable. Preprinted certifications and copies of previously submitted documents will not be acceptable. The manufacturer's certifications shall name the appropriate products, equipment, or materials and the publication specified as controlling the quality of that item. Certification shall not contain statements to imply that the item does not meet requirements specified, such as "as good as"; "achieve the same end use and results as materials formulated in accordance with the referenced publications"; or "equal or exceed the service and performance of the specified material." Certifications shall simply state that the item conforms to the requirements specified. Certificates shall be printed on the manufacturer's letterhead and shall be signed by the manufacturer's official authorized to sign certificates of compliance.

1.5.4.1 Reference Standard Compliance

Where equipment or materials are specified to conform to industry and technical society reference standards of the organizations such as American National Standards Institute (ANSI), American Society for Testing and Materials (ASTM), National Electrical Manufacturers Association (NEMA), Underwriters Laboratories (UL), and Association of Edison Illuminating Companies (AEIC), submit proof of such compliance. The label or listing by the specified organization will be acceptable evidence of compliance.

1.5.4.2 Independent Testing Organization Certificate

In lieu of the label or listing, submit a certificate from an independent testing organization, competent to perform testing, and approved by the Contracting Officer. The certificate shall state that the item has been tested in accordance with the specified organization's test methods and that the item complies with the specified organization's reference standard.

1.5.5 Operation and Maintenance Manuals

Comply with the requirements of Section 01781, "Operation and Maintenance Data" and the technical sections.

1.5.5.1 Operating Instructions

Submit text of posted operating instructions for each system and principal item of equipment as specified in the technical sections.

1.6 QUALITY ASSURANCE

1.6.1 Material and Equipment Qualifications

Provide materials and equipment that are products of manufacturers regularly engaged in the production of such products which are of equal material, design and workmanship. Products shall have been in satisfactory commercial or industrial use for 2 years prior to bid opening. The 2-year period shall include applications of equipment and materials under similar circumstances and of similar size. The product shall have been on sale on the commercial market through advertisements, manufacturers' catalogs, or brochures during the 2-year period. Where two or more items of the same class of equipment are required, these items shall be products of a single manufacturer; however, the component parts of the item need not be the products of the same manufacturer unless stated in the technical section.

1.6.2 Regulatory Requirements

Equipment, materials, installation, and workmanship shall be in accordance with the mandatory and advisory provisions of NFPA 70.

1.6.3 Alternative Qualifications

Products having less than a 2-year field service record will be acceptable if a certified record of satisfactory field operation for not less than 6000 hours, exclusive of the manufacturers' factory or laboratory tests, is furnished.

1.6.4 Service Support

The equipment items shall be supported by service organizations which are reasonably convenient to the equipment installation in order to render satisfactory service to the equipment on a regular and emergency basis during the warranty period of the contract.

1.6.5 Manufacturer's Nameplate

Each item of equipment shall have a nameplate bearing the manufacturer's name, address, model number, and serial number securely affixed in a conspicuous place; the nameplate of the distributing agent will not be acceptable.

1.6.6 Modification of References

In each of the publications referred to herein, consider the advisory provisions to be mandatory, as though the word, "shall" had been substituted for "should" wherever it appears. Interpret references in these publications to the "authority having jurisdiction," or words of similar meaning, to mean the Contracting Officer.

1.6.7 Material and Equipment Manufacturing Date

Products manufactured more than 3 years prior to date of delivery to site shall not be used, unless specified otherwise.

1.7 POSTED OPERATING INSTRUCTIONS

Provide for each system and principal item of equipment as specified in the technical sections for use by operation and maintenance personnel. The operating instructions shall include the following:

a. Wiring diagrams, control diagrams, and control sequence for each principal system and item of equipment.

b. Start up, proper adjustment, operating, lubrication, and shutdown procedures.

c. Safety precautions.

d. The procedure in the event of equipment failure.

e. Other items of instruction as recommended by the manufacturer of each system or item of equipment.

Print or engrave operating instructions and frame under glass or in approved laminated plastic. Post instructions where directed. For operating instructions exposed to the weather, provide weather-resistant materials or weatherproof enclosures. Operating instructions shall not fade when exposed to sunlight and shall be secured to prevent easy removal or peeling.

1.8 NAMEPLATES

ASTM D 709. Provide laminated plastic nameplates for each panelboard, equipment enclosure, relay, switch, and device; as specified in the technical sections or as indicated on the drawings. Each nameplate inscription shall identify the function and, when applicable, the position. Nameplates shall be melamine plastic, 0.125 inch thick, white with black center core. Surface shall be matte finish. Corners shall be square. Accurately align lettering and engrave into the core. Minimum size of nameplates shall be one by 2.5 inches. Lettering shall be a minimum of 0.25 inch high normal block style.

1.9 CABLE TAGS IN MANHOLES, HANDHOLES, AND VAULTS

Provide tags for each cable or wire located in manholes, handholes, and vaults. Tag legend shall be as indicated. The tags shall be polyethylene.

Do not provide handwritten letters.

1.9.1 Polyethylene Cable Tags

Provide tags of polyethylene that have an average tensile strength of 3250 pounds per square inch; and that are 0.08 inch thick (minimum), non-corrosive non-conductive; resistive to acids, alkalis, organic solvents, and salt water; and distortion resistant to 170 degrees F. Provide 0.05-inch (minimum) thick black polyethylene tag holder. Provide a one-piece nylon, self-locking tie at each end of the cable tag. Ties shall have a minimum loop tensile strength of 175 pounds. The cable tags shall have black block letters, numbers, and symbols one inch high on a yellow background. Letters, numbers, and symbols shall not fall off or change positions regardless of the cable tags' orientation.

1.9 ELECTRICAL REQUIREMENTS

Electrical installations shall conform to IEEE C2, NFPA 70, and requirements specified herein.

1.10 Motors and Equipment

Provide electrical components of mechanical equipment, such as motors, motor starters, control or push-button stations, float or pressure switches, solenoid valves, and other devices functioning to control mechanical equipment, including control wiring and conduit for circuits rated 100 volts or less, to conform with the requirements of the section covering the mechanical equipment. The interconnecting power wiring and conduit, control wiring rated 120 volts (nominal) and conduit, and the electrical power circuits shall be provided under Division 16.

1.10.1 Wiring and Conduit

Provide internal wiring for components of packaged equipment as an integral part of the equipment. Provide power wiring and conduit for field-installed equipment.

1.10.2 Three-Phase Motor Protection

Provide controllers for motors rated 1-hp and above with electronic phase-voltage monitors designed to protect motors from phase-loss, undervoltage, and overvoltage. Provide protection for motors from immediate restart by a time adjustable restart relay.

1.11 INSTRUCTION TO GOVERNMENT PERSONNEL (not used)

1.12 LOCKOUT REQUIREMENTS

Provide disconnecting means capable of being locked out for machines and other equipment to prevent unexpected startup or release of stored energy in accordance with 29 CFR 1910.147.

PART 2 PRODUCTS (not used)

PART 3 EXECUTION

3.1 PAINTING OF EQUIPMENT

3.1.1 Factory Applied

Electrical equipment shall have factory-applied painting systems which shall, as a minimum, meet the requirements of NEMA ICS 6 corrosion-resistance test and the additional requirements specified in the technical sections.

3.1.2 Field Applied

Paint electrical equipment as required to match finish of adjacent surfaces or to meet the indicated or specified safety criteria.

3.2 NAMEPLATE MOUNTING

Provide number, location, and letter designation of nameplates as indicated. Fasten nameplates to the device with a minimum of two sheet-metal screws or two rivets.

3.3 WARNING SIGN MOUNTING

Provide the number of signs required to be readable from each accessible side, but space the signs a maximum of 30 feet apart.

3.4 CABLE TAG INSTALLATION

Install cable tags in each manhole, handhole, and vault as specified, including each splice. Install cable tags over the fireproofing, if any, and locate the tags so that they are clearly visible without disturbing any cabling or wiring in the manholes, handholes, and vaults.

-- End of Section --

This page was intentionally left blank for duplex printing.

SECTION TABLE OF CONTENTS

DIVISION 16 - ELECTRICAL

SECTION 16120A

INSULATED WIRE AND CABLE

PART 1 GENERAL

1.1 REFERENCES
1.2 SUBMITTALS
1.3 DELIVERY, STORAGE, AND HANDLING

PART 2 PRODUCTS

2.1 Product Data
2.2 MATERIALS
2.2.1 Wire Table
2.2.2 Rated Circuit Voltages
2.2.3 Conductors
2.2.3.1 Material
2.2.3.2 Size
2.2.3.3 Stranding
2.2.4 Insulation
2.1.4.1 Insulation Material
2.3 INSTALLATION INSTRUCTIONS
2.4 TESTS, INSPECTIONS, AND VERIFICATIONS
2.4.1 Cable Data
2.4.2 Inspection and Tests
2.4.2.1 Flame Tests
2.4.2.2 Independent Tests
2.4.2.3 Reports

PART 3 EXECUTION (Not Applicable)

-- End of Section Table of Contents --

SECTION 16120A

INSULATED WIRE AND CABLE

PART 1 GENERAL

1.1 REFERENCES

The publications listed below form a part of this specification to the extent referenced. The publications are referred to in the text by basic designation only.

ASSOCIATION OF EDISON ILLUMINATING COMPANIES (AEIC)

AEIC CS5	(1994) Thermoplastic and Crosslinked Polyethylene Insulated Shielded Power Cables Rated 5 Through 35 kV
AEIC CS6	(1987; R 1989) Ethylene Propylene Insulated Shielded Power Cables Rated 5 Through 69 kV

INSTITUTE OF ELECTRICAL AND ELECTRONICS ENGINEERS (IEEE)

IEEE Std 383	(1974; R 1992) Class 1E Electric Cables, Field Splices, and Connections for Nuclear Power Generating Stations

NATIONAL ELECTRICAL MANUFACTURERS ASSOCIATION (NEMA)

NEMA WC 7	(1993) Cross-Linked-Thermosetting-Polyethylene-Insulated Wire and Cable for the Transmission and Distribution of Electrical Energy
NEMA WC 8	(1993) Ethylene-Propylene-Rubber-Insulated Wire and Cable for the Transmission and Distribution of Electrical Energy

1.2 SUBMITTALS

Government approval is required for submittals with a "G" designation; submittals not having a "G" designation are for information only. The following shall be submitted in accordance with Section 01330 SUBMITTAL PROCEDURES:

SD-03 Product Data

Product Data; G

The Contractor shall submit cable manufacturing data as requested.

SD-08 Manufacturer's Instructions

INSTALLATION INSTRUCTIONS; G

SD-06 Test Reports

TESTS, INSPECTIONS, AND VERIFICATIONS; G

1.3 DELIVERY, STORAGE, AND HANDLING

Furnish cables on reels or coils. Each cable and the outside of each reel or coil, shall be plainly marked or tagged to indicate the cable length, voltage rating, conductor size, and manufacturer's lot number and reel number. Each coil or reel of cable shall contain only one continuous cable without splices. Cables for exclusively dc applications, as specified in paragraph HIGH VOLTAGE TEST SOURCE, shall be identified as such. Shielded cables rated 2,001 volts and above and shall be reeled and marked in accordance with Section I of AEIC CS5 or AEIC CS6, as applicable. Reels shall remain the property of the Contractor.

PART 2 PRODUCTS

2.1 Product Data

The Contractor shall submit cable manufacturing data, including wire and cable and accessory product information, as requested.

2.2 MATERIALS

2.2.1 Wire Table

Wire and cable shall be furnished in accordance with the requirements of this specification, and shall conform to the detailed requirements specified herein.

2.2.2 Rated Circuit Voltages

All wire and cable shall have minimum rated circuit voltages equal to or greater than the applied circuit voltage.

2.2.3 Conductors

2.2.3.1 Material

Conductors shall conform to all the applicable requirements of Section 2 of NEMA WC 7 or Part 2 of NEMA WC 8 as applicable and shall be annealed copper. Copper conductors may be bare, or tin- or lead-alloy-coated, if required by the type of insulation used.

2.2.3.2 Size

Minimum wire size shall be No. 12 AWG for power and lighting circuits; No. 10 AWG for current transformer secondary circuits; No. 14 AWG for potential transformer, relaying, and control circuits; No. 16 AWG for annunciator circuits; and No. 19 AWG for alarm circuits.

2.2.3.3 Stranding

Conductor stranding classes cited herein shall be as defined in Appendix L of NEMA WC 7 or NEMA WC 8, as applicable. Lighting conductors No. 10 AWG and smaller shall be solid or have Class B stranding. Any conductors used between stationary and moving devices, such as hinged doors or panels, shall have Class H or K stranding. All other conductors shall have Class B or C stranding, except that conductors shown on the drawings, or in the schedule, as No. 12 AWG may be 19 strands of No. 25 AWG, and conductors shown as No. 10 AWG may be 19 strands of No. 22 AWG.

2.2.4 Insulation

2.1.4.1 Insulation Material

Insulation shall be Type THHN for conductors sized #4 and smaller and XHHW-2 for conductors sized #3 or larger.

2.3 INSTALLATION INSTRUCTIONS

The following information shall be provided by the cable manufacturer for each size, conductor quantity, and type of cable furnished:

a. Minimum bending radius, in inches - For multiple-conductor cables, this information shall be provided for both the individual conductors and the multiple-conductor cable.

b. Pulling tension and sidewall pressure limits, in pounds.

c. Instructions for stripping semiconducting insulation shields, if furnished, with minimum effort without damaging the insulation.

d. Upon request, compatibility of cable materials and construction with specific materials and hardware manufactured by others shall be stated. Also, if requested, recommendations shall be provided for various cable operations, including installing, splicing, terminating, etc.

2.4 TESTS, INSPECTIONS, AND VERIFICATIONS

2.4.1 Cable Data

Manufacture of the wire and cable shall not be started until all materials to be used in the fabrication of the finished wire or cable have been approved by the Contracting Officer. Cable data shall be submitted for approval including dimensioned sketches showing cable construction, and sufficient additional data to show that these specifications will be satisfied.

2.4.2 Inspection and Tests

Inspection and tests of wire and cable furnished under these specifications shall be made by and at the plant of the manufacturer, and shall be witnessed by the Contracting Officer or his authorized representative, unless waived in writing. The Government may perform further tests before or after installation. Testing in general shall comply with Section 6 of NEMA WC 7 or Part 6 of NEMA WC 8. Specific tests required for particular materials, components, and completed cables shall be as specified in the sections of the above standards applicable to those materials, components, and cable types. Tests shall also be performed in accordance with the additional requirements specified below.

2.4.2.1 Flame Tests

All cable assemblies shall pass IEEE Std 383 flame tests, paragraph 2.5, using the ribbon gas burner. Single-conductor cables and individual conductors of multiple-conductor cables shall pass the flame test of NEMA WC 7, paragraph 7.7.3.1.3. If such tests, however, have previously been made on identical cables, these tests need not be repeated. Instead, certified reports of the original qualifying tests shall be submitted. In this case the reports furnished under paragraph REPORTS, shall verify that all of each cable's materials, construction, and dimensions are the same as those in the qualifying tests.

2.4.2.2 Independent Tests

The Government may at any time make visual inspections, continuity or resistance checks, insulation resistance readings, power factor tests, or dc high-potential tests at field test values. A cable's failure to pass these tests and inspections, or failure to produce readings consistent with acceptable values for the application, will be grounds for rejection of the cable.

2.4.2.3 Reports

Results of tests made shall be furnished. No wire or cable shall be shipped until authorized. Lot number and reel or coil number of wire and cable tested shall be indicated on the test reports.

PART 3 EXECUTION (Not Applicable)

-- End of Section --

This page was intentionally left blank for duplex printing.

SECTION TABLE OF CONTENTS

DIVISION 16 - ELECTRICAL

SECTION 16302N

UNDERGROUND AND ABOVE-GROUND TRANSMISSION AND DISTRIBUTION

PART 1 GENERAL

1.1 REFERENCES
1.2 RELATED REQUIREMENTS
1.3 DEFINITIONS
1.4 SUBMITTALS
1.5 QUALITY ASSURANCE
1.5.1 Test Instrument and Procedure

PART 2 PRODUCTS

2.1 MATERIALS AND EQUIPMENT
2.1.1 Acceptance checks and tests
2.1.2 Conduit
2.1.2.1 Rigid Metal Conduit
2.1.2.2 Rigid Metal Conduit, PVC Coated
2.1.2.3 Intermediate Metal Conduit
2.1.2.4 Intermediate Metal conduit, PVC Coated
2.1.1.5 Rigid-Non-Metallic Conduit
2.1.3 Fittings
2.1.3.1 Outlet Boxes for Steel Conduit
2.1.4 Conductors Rated 600 Volts and Less
2.1.4.1 600 Volt Wires and Cables
2.1.5 600 Volt Wire Connector and Terminals
2.1.6 600 Volt Splices
2.1.7 Tape
2.1.7.1 Insulating Tape
2.1.7.2 Buried Warning and Identification Tape
2.1.7.3 Fireproofing Tape (Not Used)
2.1.8 Pull Rope
2.1.9 Grounding and Bonding Equipment
2.1.10 Cable Tags
2.2 SOURCE QUALITY CONTROL (not Used)

PART 3 EXECUTION

3.1 INSTALLATION
3.1.1 Contractor Damage (Not Used)
3.1.2 Concrete
3.1.3 Direct Burial System (Not Used)
3.1.4 Underground Conduit/Duct Without Concrete Encasement
3.1.4.1 Conduit Installation
3.1.4.2 Encasement Under Roads and Structures

3.1.4.3 Multiple Conduits
3.1.5 Exposed Conduit All exposed conduit shall be galvanized rigid metal conduit.
3.1.6 Conduit Protection at Concrete Penetrations
3.1.7 Buried Warning and Identification Tape
3.1.8 Cable Pulling
3.1.8.1 Cable Lubricants
3.1.8.2 Cable Pulling Tensions
3.1.8.3 Secondary Cable Runs, 600 Volts and Less
3.1.9 600 Volt Cable Splicing and Terminating
3.1.9.1 Splices for 600 Volt Class Cables
3.1.10 Grounding Systems
3.1.10.1 Grounding Electrodes
3.1.10.2 Grounding Connections
3.1.10.3 Grounding Conductors
3.1.10.4 Ground Cable Crossing Expansion Joints
3.1.11 Earthwork for Utilities
3.1.12 Reconditioning of Surfaces
3.1.12.1 Unpaved Surfaces
3.1.12.2 Paving Repairs
3.2 FIELD QUALITY CONTROL
3.2.1 600 Volt Conductor Test
3.2.2 Low Voltage Test Cable Tests

-- End of Section Table of Contents --

SECTION 16302N

UNDERGROUND AND ABOVE-GROUND TRANSMISSION AND DISTRIBUTION

PART 1 GENERAL

1.1 REFERENCES

The publications listed below form a part of this specification to the extent referenced. The publications are referred to in the text by the basic designation only.

ASSOCIATION OF EDISON ILLUMINATING COMPANIES (AEIC)

AEIC CS1	(1990) Impregnated Paper Insulated, Lead Covered Cable, Solid Type
AEIC CS5	(1994) Thermoplastic and Cross-Linked Polyethylene Insulated Shielded Power Cable Rated 5 Through 35 kV
AEIC CS6	(1987; R 1989) Ethylene Propylene Insulated Shielded Power Cable Rated 5 Through 69 kV

AMERICAN NATIONAL STANDARDS INSTITUTE (ANSI)

ANSI C2	(1997) National Electrical Safety Code
ANSI C119.1	(1986; R 1997) Electric Connectors - Sealed Insulated Underground Connector Systems Rated 600 Volts

AMERICAN SOCIETY FOR TESTING AND MATERIALS (ASTM)

ASTM B 1	(1995) Hard-Drawn Copper Wire
ASTM B 8	(1995) Concentric-Lay-Stranded Copper Conductors, Hard, Medium-Hard, or Soft
ASTM C 260	(2000) Air-Entraining Admixtures for Concrete
ASTM F 512	(1995) Smooth-Wall Poly (Vinyl Chloride) (PVC) Conduit and Fittings for Underground Installation

INSTITUTE OF ELECTRICAL AND ELECTRONICS ENGINEERS (IEEE)

IEEE Std 48	(1996) High-Voltage Alternating-Current Cable Terminations

IEEE Std 404	(1993) Cable Joints for Use with Extruded Dielectric Cable Rated 5000-138 000 V and Cable Joints for Use with Laminated Dielectric Cable Rated 2500-500,000 V

NATIONAL ELECTRICAL MANUFACTURERS ASSOCIATION (NEMA)

NEMA RN 1	(1989) Polyvinyl-Chloride (PVC) Externally Coated Galvanized Rigid Steel Conduit and Intermediate Metal Conduit
NEMA TC 2	(1990) Electrical Plastic Tubing (EPT) and Conduit (EPC-40 and EPC-80)
NEMA TC 3	(1990) PVC Fittings for Use with Rigid PVC Conduit and Tubing
NEMA TC 6	(1990) PVC and ABS Plastic Utilities Duct for Underground Installation
NEMA TC 8	(1990) Extra-Strength PVC Plastic Utilities Duct for Underground Installation
NEMA TC 9	(1990) Fittings for ABS and PVC Plastic Utilities Duct for Underground Installation
NEMA WC 7	(1993) Cross-Linked-Thermosetting-Polyethylene-Insulated Wire and Cable for the Transmission and Distribution of Electrical Energy
NEMA WC 8	(1993) Ethylene-Propylene-Rubber-Insulated Wire and Cable for the Transmission and Distribution of Electrical Energy

INTERNATIONAL ELECTRICAL TESTING ASSOCIATION (NETA)

NETA ATS	(1991) Electrical Power Distribution Equipment and Systems

NATIONAL FIRE PROTECTION ASSOCIATION (NFPA)

NFPA 70	(2002) National Electrical Code
NFPA 70B	(1998) Electrical Equipment Maintenance

UNDERWRITERS LABORATORIES (UL)

UL 6	(1997) Rigid Metal Conduit
UL 83	(1998) Thermoplastic-Insulated Wires and Cables

UL 467	(1993; Bul. 1994, R 1996) Grounding and Bonding Equipment
UL 486A	(1997; R 1998) Wire Connectors and Soldering Lugs for Use With Copper Conductors
UL 486B	(1997; R 1997) Wire Connectors for Use with Aluminum Conductors
UL 510	(1994; R 1998) Chloride, Polyethylene, and Rubber Insulating Tape
UL 514A	(1996; R 1998) Metallic Outlet Boxes
UL 514B	(1997; R 1998) Fittings for Cable and Conduit
UL 651	(1995; R 1998) Schedule 40 and 80 Rigid PVC Conduit
UL 854	(1996; Bul. 1997 R 1998) Service-Entrance Cables
UL 1242	(1996; R 1998) Intermediate Metal Conduit

1.2 RELATED REQUIREMENTS

Section 16050N, "Basic Electrical Materials and Methods" and Section 02582N, "Electrical Manhole and Handhole," applies to this section with additions and modifications specified herein.

1.3 DEFINITIONS

In the text of this section, the words conduit and duct are used interchangeably and have the same meaning.

1.4 SUBMITTALS

Submit the following in accordance with Section 01330 ,"Submittal Procedures."

SD-03 Product Data

600 volt wires and cables

SD-06 Test Reports

Acceptance checks and tests; G

Identify each cable for 600-volt tests. When testing grounding electrodes and systems, identify each electrode and system for

each test, as well as the resistance and soil conditions at the time the measurement were made.

SD-08 Manufacturer's Instructions

Ground megger "UL listed" kit

1.5 QUALITY ASSURANCE

1.5.1 Test Instrument and Procedure

Ground megger "UL listed" kit
Submit for use of ground megger with proposed method indicated.

PART 2 PRODUCTS

2.1 MATERIALS AND EQUIPMENT

2.1.1 Acceptance checks and tests

Identify each cable for 600-volt tests. When testing grounding electrodes and systems, identify each electrode and system for each test, as well as the resistance and soil conditions at the time the measurement were made.

2.1.2 Conduit

2.1.2.1 Rigid Metal Conduit

UL 6, galvanized steel, threaded type.

2.1.2.2 Rigid Metal Conduit, PVC Coated

UL 6, galvanized steel, threaded type, coated with a polyvinyl chloride (PVC) sheath bonded to the galvanized exterior surface, nominal 40 mils thick, conforming to NEMA RN 1, Type A40, except that hardness shall be nominal 85 Shore A durometer, dielectric strength shall be minimum 400 volts per mil at 60 Hz, tensile strength shall be minimum 3500 psi, and aging shall be minimum 1000 hours in an Atlas Weatherometer.

2.1.2.3 Intermediate Metal Conduit

UL 1242, galvanized steel, threaded type.

2.1.2.4 Intermediate Metal conduit, PVC Coated

UL 1242, galvanized steel, threaded type, coated with a polyvinyl chloride (PVC) sheath bonded to the galvanized exterior surface, nominal 40 mils thick, conforming to NEMA RN 1, Type A40, except that hardness shall be nominal 85 Shore A durometer, dielectric strength shall be minimum 400 volts per mil at 60 Hz, tensile strength shall be minimum 3500 psi, and aging shall be minimum 1000 hours in an Atlas Weatherometer.

2.1.1.5 Rigid-Non-Metallic Conduit

Schedule 40 PVC

2.1.3 Fittings

2.1.3.1 Outlet Boxes for Steel Conduit

Outlet boxes for use with rigid or flexible steel conduit shall be cast-metal cadmium or zinc-coated if of ferrous metal with gasketed closures and shall conform to UL 514A.

2.1.4 Conductors Rated 600 Volts and Less

Conductor and conduit sizes indicated are for copper conductors unless otherwise noted. Insulated conductors shall have the date of manufacture and other identification imprinted on the outer surface of each cable at regular intervals throughout the cable length. Wires and cables manufactured more than 24 months prior to date of delivery to the site shall not be used.

2.1.4.1 600 Volt Wires and Cables

Conductors in conduit other than service entrance shall conform to UL 83. All conductors shall be copper. Conductor size and number of conductors in each cable shall be as indicated. Conductors shall be color coded. Conductor identification shall be provided within each enclosure where a tap, splice, or termination is made. Conductor identification shall be by color-coded insulated conductors, plastic-coated self-sticking printed markers, colored nylon cable ties and plates, or heat shrink type sleeves. Control circuit terminations shall be properly identified. Conductors No. 10 AWG and smaller shall be solid copper. Conductors No. 8 AWG and larger shall be stranded copper. All conductors shall be copper

a. Colors for coding conductors shall be:

208-VOLT SYSTEM	480-VOLT SYSTEM
Neutral - White	Neutral - White
Phase A - Black	Phase A - Brown
Phase B - Red	Phase B - Orange
Phase C - Blue	Phase C - Yellow
Grounding conductor - Green	Grounding conductor - Green

2.1.5 600 Volt Wire Connector and Terminals

Shall provide a uniform compression over the entire contact surface. Solderless terminal lugs shall be used on stranded conductors.

2.1.6 600 Volt Splices

Provide splices with a compression connector on the conductor and by insulating and waterproofing using one of the following methods which are suitable for continuous submersion in water and comply ANSI C119.1.

a. Provide cast-type splice insulation by means of molded casting process employing a thermosetting epoxy resin insulating material applied by a gravity poured method or by a pressure injected method. Provide component materials of the resin insulation in a packaged form ready for convenient mixing without removing from the package.

b. Gravity poured method shall employ materials and equipment contained in an approved commercial splicing kit which includes a mold suitable for the cables to be spliced. When the mold is in place around the joined conductors, prepare the resin mix and pour into the mold.

c. Provide heavy wall heat shrinkable splice insulation by means of a thermoplastic adhesive sealant material which shall be applied by a clean burning propane gas torch.

d. Provide a cold-shrink rubber splice which consists of EPDM rubber tube which has been factory stretched onto a spiraled core which is removed during splice installation. The installation shall not require heat or flame, or any additional materials such as covering or adhesive. It shall be designed for use with inline compression type connectors, or indoor, outdoor, direct-burial or submerged locations.

2.1.7 Tape

2.1.7.1 Insulating Tape

UL 510, plastic insulating tape, capable of performing in a continuous temperature environment of 80 degrees C.

2.1.7.2 Buried Warning and Identification Tape

Provide detectable aluminum foil plastic-backed tape or detectable magnetic plastic tape manufactured specifically for warning and identification of buried cable and conduit. Tape shall be detectable by an electronic detection instrument. Provide tape in rolls, 2 inches minimum width, color coded for the utility involved with warning and identification imprinted in bold black letters continuously and repeatedly over entire tape length. Warning and identification shall be CAUTION BURIED ELECTRIC CABLE BELOW or similar. Use permanent code and letter coloring unaffected by moisture and other substances contained in trench backfill material.

2.1.7.3 Fireproofing Tape (Not Used)

2.1.8 Pull Rope

Shall be plastic having a minimum tensile strength of 200 pounds. Leave a minimum of 24 inches of slack at each end of the pull wires.

2.1.9 Grounding and Bonding Equipment

UL 467. Ground rods shall be copper clad steel with diameter adequate to permit driving to full length of the rod, but not less than 3/4 inch in diameter and 10 feet long unless otherwise indicated.

2.1.10 Cable Tags

Provide as specified in Section 16050N, "Basic Electrical Materials and Methods".

2.2 SOURCE QUALITY CONTROL (not Used)

PART 3 EXECUTION

3.1 INSTALLATION

NFPA 70

3.1.1 Contractor Damage (Not Used)

3.1.2 Concrete

Concrete work for electrical requirements shall be 3000 psi minimum ultimate 28-day compressive strength with one inch minimum aggregate conforming to the requirements of Section 03307, CONCRETE FOR MINOR STRUCTURES.

3.1.3 Direct Burial System (Not Used)

3.1.4 Underground Conduit/Duct Without Concrete Encasement

Type of conduit shall be EPC-40-PVC.

3.1.4.1 Conduit Installation

Top of the conduit shall be not less than 24 inches below grade, and shall have a minimum slope of 3 inches in each 100 feet away from buildings and toward manholes and other necessary drainage points. All sweeps and risers shall be long radius galvanized rigid metal conduit. Run conduit in straight lines except where a change of direction is necessary. For conduit sizes less than 3 inches, draw a stiff bristle brush through until conduit is clear of particles of earth, sand and gravel; then immediately install conduit plugs. Provide not less than 3 inches clearance from the conduit to each side of the trench. A minimum clearance of 2 1/2 inches shall be provided between adjacent conduits. Grade bottom of trench smooth; where rock, soft spots, or sharp-edged materials are encountered, excavate the bottom for an additional 3 inches, fill and tamp level with

original bottom with sand or earth free from particles, that would be retained on a 1/4 inch sieve. Provide color, type and depth of warning tape.

3.1.4.2 Encasement Under Roads and Structures

Under roads, paved areas, and railroad tracks, install conduits in concrete encasement of rectangular cross-section providing a minimum of 3 inch concrete cover around ducts. Concrete encasement shall extend at least 5 feet beyond the edges of paved areas and roads, and 12 feet beyond the rails on each side of railroad tracks. Conduits to be installed under existing paved areas which are not to be disturbed, and under roads and railroad tracks, shall be zinc-coated, rigid steel, jacked into place. Hydraulic jet method shall not be used.

3.1.4.3 Multiple Conduits

Separate multiple conduits by a minimum distance of 2 1/2 inches, except that light and power conduits shall be separated from control, signal, and telephone conduits by a minimum distance of 3 inches. Stagger the joints of the conduits by rows and layers to strengthen the conduit assembly. Provide plastic duct spacers that interlock vertically and horizontally. Spacer assembly shall consist of base spacers, intermediate spacers, and top spacers to provide a completely enclosed and locked-in conduit assembly. Install spacers per manufacturer's instructions, but provide a minimum of two spacer assemblies per 10 feet of conduit assembly.

3.1.5 Exposed Conduit

All exposed conduit shall be galvanized rigid metal conduit.

3.1.6 Conduit Protection at Concrete Penetrations

Galvanized conduits which penetrate concrete (slabs, pavement, and walls) in wet locations shall be PVC coated and shall extend from at least 2 inches within the concrete to the first coupling or fitting outside the concrete (minimum of 6 inches from penetration).

3.1.7 Buried Warning and Identification Tape

Bury tape with the printed side up at a depth of 12 inches below the top surface of earth or the top surface of the subgrade under pavements.

3.1.8 Cable Pulling

Test existing duct lines with a mandrel and thoroughly swab out to remove foreign material before pulling cables. Pull cables down grade with the feed-in point at the manhole or buildings of the highest elevation. Use flexible cable feeds to convey cables through manhole opening and into duct runs. Do not exceed the specified cable bending radii when installing cable under any conditions, including turnups into switches, transformers, switchgear, switchboards, and other enclosures. Cable with tape [or wire] shield shall have a bending radius not less than 12 times the overall diameter of the completed cable. If basket-grip type cable-pulling devices

are used to pull cable in place, cut off the section of cable under the grip before splicing and terminating.

3.1.8.1 Cable Lubricants

Use lubricants that are specifically recommended by the cable manufacturer for assisting in pulling jacketed cables. Lubricant shall not be deleterious to the cable sheath, jacket, or outer coverings.

3.1.8.2 Cable Pulling Tensions

Tensions shall not exceed the maximum pulling tension recommended by the cable manufacturer. Monitor pulling tension during cable installation to ensure maximum pulling tension is not exceeded.

3.1.8.3 Secondary Cable Runs, 600 Volts and Less

Provide insulated copper equipment grounding conductor, sized as required by the rating of the overcurrent device supplying the phase conductors.

3.1.9 600 Volt Cable Splicing and Terminating

Protect terminations of insulated power and lighting cables from accidental contact, deterioration of coverings and moisture by providing terminating devices and materials. Install terminations of insulated power and lighting cables in accordance with the manufacturer's requirements. Make terminations with materials and methods as indicated or specified herein or as designated by the written instructions of the cable manufacturer and termination kit manufacturer.

3.1.9.1 Splices for 600 Volt Class Cables

Splices in underground distribution systems shall made only in accessible locations such as manholes and handholes, with a compression connector on the conductor and by insulating and waterproofing by one of the following methods suitable for continuous submersion in water and comply with ANSI C119.1.

a. Provide heavy wall heat shrinkable splice insulation by means of a thermoplastic adhesive sealant material that should be applied by a clean burning propane gas torch. Cables may be moved when joint is cool to the touch.

b. Provide a cold-shrink rubber splice that consists of EPDM rubber tube that has been factory stretched onto a spiraled core that is removed during splice installation. The installation shall not require heat or flame, or any additional materials such as coverings or adhesive. It shall be designed for use with inline compression type connectors, or indoor, outdoor, direct-burial or submerged locations.

3.1.10 Grounding Systems

Noncurrent-carrying metallic parts associated with electrical equipment

shall have a maximum resistance to solid earth ground not exceeding the following values:

Shall be as indicated, and as required by NFPA 70 and ANSI C2.

3.1.10.1 Grounding Electrodes

Provide cone pointed driven ground rods driven full depth plus 6 inches, installed to provide an earth ground of the appropriate value for the particular equipment being grounded.

3.1.10.2 Grounding Connections

Make grounding connections that are buried or otherwise normally inaccessible, by exothermic weld or compression connector.

a. Make exothermic welds strictly in accordance with the weld manufacturer's written recommendations. Welds which are "puffed up" or which show convex surfaces indicating improper cleaning are not acceptable. Mechanical connectors are not required at exothermic welds.

b. Make compression connections using a hydraulic compression tool to provide the correct circumferential pressure. Tools and dies shall be as recommended by the manufacturer. An embossing die code or other standard method shall provide visible indication that a connector has been adequately compressed on the ground wire.

3.1.10.3 Grounding Conductors

Grounding conductors shall be stranded-bare copper conforming to ASTM B 8, Class B, for sizes No. 6 AWG and larger, and shall be solid-bare copper conforming to ASTM B 1 for sizes No. 8 and smaller. Cable sheaths, cable shields, conduit, and equipment shall be grounded with No. 6 AWG [, except 34.5 kV cable sheaths and cable shields shall be grounded with No. 4/0 AWG].

3.1.10.4 Ground Cable Crossing Expansion Joints

Protect ground cables crossing expansion joints or similar separations in structures and pavements by use of approved devices or methods of installation that provide the necessary slack in the cable across the joint to permit movement. Use stranded or other approved flexible copper cable across such separations.

3.1.11 Earthwork for Utilities

Earthwork for utilities shall be in accordance with Section 02316, "Excavation, Trenching, and Backfilling, for Utilities."

3.1.12 Reconditioning of Surfaces

3.1.12.1 Unpaved Surfaces

Restore to their original elevation and condition unpaved surfaces

disturbed during installation of duct. Preserve sod and topsoil removed during excavation and reinstall after backfilling is completed. Replace sod that is damaged by sod of quality equal to that removed. When the surface is disturbed in a newly seeded area, re-seed the restored surface with the same quantity and formula of seed as that used in the original seeding.

3.1.12.2 Paving Repairs

Where trenches, pits, or other excavations are made in existing roadways and other areas of pavement where surface treatment of any kind exists, restore such surface treatment or pavement the same thickness and in the same kind as previously existed, except as otherwise specified, and to match and tie into the adjacent and surrounding existing surfaces.

3.2 FIELD QUALITY CONTROL

As an exception to requirements that may be stated elsewhere in the contract, notify the Contracting Officer 5 working days prior to each test. Furnish labor, equipment. and incidentals required for testing, except that the Government will provide electric power required for the tests. Correct defects in the work provided by the Contractor and repeat tests until the work is in compliance with contract requirements.

3.2.1 600 Volt Conductor Test

The Contractor shall be responsible for identifying all equipment and devices that could be damaged by application of the test voltage and ensuring that they have been properly disconnected prior to performing insulation resistance testing. An insulation resistance test shall be performed on all low and medium voltage cables after cables are installed in their final configuration and prior to energization. The test voltage shall be 500 volts DC applied for one minute between each conductor and ground and between all possible combinations of conductors. The minimum value of resistance shall be:

R in megohms = (rated voltage in kV + 1) x 1000 / (length of cable in feet)

Each cable failing this test shall be repaired or replaced. The repaired cable system shall then be retested until failures have been eliminated.

3.2.2 Low Voltage Test Cable Tests

a. Continutity test.
b. Insulation Resistance test

-- End of Section --

This page was intentionally left blank for duplex printing.

SECTION TABLE OF CONTENTS

DIVISION 16 - ELECTRICAL

SECTION 16403A

PANELBOARDS AND TRANSFORMERS

PART 1 GENERAL

1.1 REFERENCES
1.2 SYSTEM DESCRIPTION
1.2.1 Rules
1.2.2 Coordination
1.2.3 Standard Products
1.2.4 Nameplates
1.3 SUBMITTALS
1.4 DELIVERY, STORAGE, AND HANDLING
1.5 MAINTENANCE
1.5.1 Accessories and Tools
1.5.2 Spare Parts

PART 2 PRODUCTS

2.1 Panelboards
2.2 CONNECTIONS
2.3 MOLDED CASE CIRCUIT BREAKERS
2.3.1 Trip Units
2.3.2 480-Volt AC Circuits
2.3.3 120/240-Volt AC Circuits
2.4 TERMINAL BLOCKS
2.4.1 Types of Terminal Blocks
2.4.1.1 Load Type
2.4.1.2 Marking Strips
2.5 PANELBOARDS
2.5.1 Enclosure
2.5.2 Buses
2.5.3 Components
2.6 PAINTING
2.7 FACTORY TESTS
2.8 CONDUIT AND TUBING
2.8.1 Flexible Conduit, Steel and Plastic
2.8.2 Intermediate Metal Conduit
2.8.3 PVC Coated Rigid Steel Conduit
2.8.4 Rigid Plastic Conduit
2.9 CONDUIT AND DEVICE BOXES AND FITTINGS
2.9.1 Boxes, Metallic Outlet
2.9.2 Boxes, Nonmetallic, Outlet and Flush-Device Boxes and Covers
2.9.3 Boxes, Switches (Enclosed), Surface-Mounted
2.9.4 Fittings for Conduit and Outlet Boxes
2.9.5 Fittings, PVC, for Use with Rigid PVC Conduit and Tubing

2.10 CONDUIT COATINGS PLASTIC RESIN SYSTEM
2.11 CONNECTORS, WIRE PRESSURE
2.12 ELECTRICAL GROUNDING AND BONDING EQUIPMENT
2.12.1 Ground Buss
2.13 TRANSFORMERS
2.13.1 Transformers, Dry-Type
2.13.2 Average Sound Level

PART 3 EXECUTION

3.1 Shop Drawings
3.2 GROUNDING
3.2.1 Ground Rods
3.2.2 Grounding Conductors
3.3 WIRING METHODS
3.3.1 Conduit and Tubing Systems
3.3.2 Pull Wires
3.3.3 Conduit Stub-Ups
3.3.4 Below Slab-on-Grade or in the Ground
3.3.5 Changes in Direction of Runs
3.3.6 Supports
3.3.7 Exposed Raceways
3.3.8 Cables and Conductors
3.4 BOXES AND SUPPORTS
3.4.1 Box Applications
3.4.2 Brackets and Fasteners
3.4.3 Mounting in Walls
3.5 PANELBOARDS
3.5.1 Panelboards
3.6 MOTOR-DISCONNECT MEANS
3.5.1 EQUIPMENT CONNECTIONS
3.7 REPAIR OF EXISTING WORK
3.8 FIELD TESTING
3.8.1 Safety
3.8.2 Dry-Type Transformer Tests
3.9 OPERATING TESTS
3.10 FIELD SERVICE
3.10.1 Onsite Training
3.11 ACCEPTANCE

-- End of Section Table of Contents --

SECTION 16403A

PANELBOARDS AND TRANSFORMERS

PART 1 GENERAL

1.1 REFERENCES

The publications listed below form a part of this specification to the extent referenced. The publications are referred to in the text by basic designation only.

AMERICAN SOCIETY FOR TESTING AND MATERIALS (ASTM)

ASTM B 187	(1994) Copper Bar, Bus Bar, Rod and Shapes
ASTM B 317	(1992a) Aluminum-Alloy Extruded Bar, Rod, Tube, Pipe, and Structural Shapes for Electrical Purposes (Bus Conductor)

ASME INTERNATIONAL (ASME)

ASME B1.1	(1989) Unified Inch Screw Threads (UN and UNR Thread Form)
ASME B1.20.1	(1983; R 1992) Pipe Threads, General Purpose (Inch)

NATIONAL ELECTRICAL MANUFACTURERS ASSOCIATION (NEMA)

NEMA AB 1	(1993) Molded Case Circuit Breakers and Molded Case Switches
NEMA ICS 1	(1993) Industrial Control and Systems
NEMA ICS 2	(2000) Industrial Controls and System Controllers, Contactors, and Overload Relays, Rate 600 Volts
NEMA ICS 4	(1997) Industrial Control and Systems Terminal Blocks
NEMA ICS 6	(1993; R 2001) Industrial Control and Systems Enclosures
NEMA PB 1	(1990) Panelboards
NEMA ST 20	(1992) Dry-Type Transformers for General

Applications

NATIONAL FIRE PROTECTION ASSOCIATION (NFPA)

NFPA 70	(2002) National Electrical Code

UNDERWRITERS LABORATORIES (UL)

UL 44	(1991; Rev thru Jan 1995) Rubber-Insulated Wires and Cables
UL 50	(1992) Enclosures for Electrical Equipment
UL 67	(1993; Rev thru May 1994) Panelboards
UL 489	(1991; Rev thru Dec 1994) Molded Case Circuit Breakers and Circuit Breaker Enclosures
UL 1063	(1993; Rev thru Oct 1994) Machine-Tool Wires and Cables

1.2 SYSTEM DESCRIPTION

These specifications include the design, fabrication, assembly, wiring, testing, and delivery of the items of equipment and accessories and spare parts listed in the Schedule and shown on the drawings.

1.2.1 Rules

The equipment shall conform to the requirements of NFPA 70 unless more stringent requirements are indicated herein or shown. NEMA rated and UL listed equipment has been specified when available. Equipment must meet NEMA and UL construction and rating requirements as specified. No equivalent will be acceptable. The contractor shall immediately notify the Contracting Officer of any requirements of the specifications or contractor proposed materials or assemblies that do not comply with UL or NEMA. International Electrotechnical Commission (IEC) rated equipment will not be considered an acceptable alternative to specified NEMA ratings.

1.2.2 Coordination

The general arrangement of the panelboards is shown on the contract drawings. Any modifications of the equipment arrangement or device requirements as shown on the drawings shall be subject to the approval of the Contracting Officer. If any conflicts occur necessitating departures from the drawings, details of and reasons for departures shall be submitted and approved prior to implementing any change. All equipment shall be completely assembled at the factory.

1.2.3 Standard Products

Material and equipment shall be standard products of a manufacturer regularly engaged in their manufacture and shall essentially duplicate

items that have been in satisfactory use for at least 2 years prior to bid opening. All materials shall conform to the requirements of these specifications. Materials shall be of high quality, free from defects and imperfections, of recent manufacture, and of the classification and grades designated. All materials, supplies, and articles not manufactured by the Contractor shall be the products of other recognized reputable manufacturers. If the Contractor desires for any reason to deviate from the standards designated in these specifications, he shall, after award, submit a statement of the exact nature of the deviation, and shall submit, for the approval of the Contracting Officer, complete specifications for the materials that he proposes to use.

1.2.4 Nameplates

Nameplates shall be made of laminated sheet plastic or of anodized aluminum approximately 4 millimeters (1/8 inch) thick, engraved to provide white letters on a black background. The nameplates shall be fastened to the panels in proper positions with anodized round-head screws. Lettering shall be minimum 15 millimeters (1/2 inch) high. Nameplate designations shall be in accordance with lists on the drawings, and as a minimum shall be provided for the following equipment:

a. Panelboards

b. Individually-mounted circuit breakers in Panelboard

1.3 SUBMITTALS

Government approval is required for submittals with a "G" designation; submittals not having a "G" designation are for information only. The following shall be submitted in accordance with Section 01330 SUBMITTAL PROCEDURES:

SD-02 Shop Drawings

Shop Drawings; G

The Contractor shall, submit for the approval of the Contracting Officer six (6) copies of outline drawings of all equipment to be furnished under this contract, together with weights and overall dimensions. Drawings shall show the general arrangement and overall dimensions of the panelboards. These drawings shall show space requirements, details of any floor supports to be embedded in concrete and provisions for conduits for external cables.

Panelboards; G

The Contractor shall, within 30 calendar days after date of award submit for the approval of the Contracting Officer six (6) copies of electrical equipment drawings. A single-line diagram, equipment list and nameplate schedule shall be provided for each switchboard and panelboard.

1.4 DELIVERY, STORAGE, AND HANDLING

The equipment shall be shipped as completely assembled and wired as feasible so as to require a minimum of installation work. Each shipping section shall be properly match marked to facilitate reassembly. All finished painted surfaces and metal work shall be wrapped suitably or otherwise protected from damage during shipment. All spare parts and accessories shall be carefully packaged and clearly marked.

1.5 MAINTENANCE

1.5.1 Accessories and Tools

A complete set of accessories and special tools unique to equipment provided and required for erecting, handling, dismantling, testing and maintaining the apparatus shall be furnished by the Contractor.

1.5.2 Spare Parts

Spare parts shall be furnished as specified below. All spare parts shall be of the same material and workmanship, shall meet the same requirements, and shall be interchangeable with the corresponding original parts furnished.

a. 2 - One quart containers of the paint used for the exterior surfaces of outdoor equipment.

PART 2 PRODUCTS

Products shall conform to the respective publications and other requirements specified below. Materials and equipment not listed below shall be as specified elsewhere in this section. Items of the same classification shall be identical including equipment, assemblies, parts and components.

2.1 Panelboards

The Contractor shall, within 30 calendar days after date of award submit for the approval of the Contracting Officer six (6) copies of electrical equipment drawings. A single-line diagram, equipment list and nameplate schedule shall be provided for each switchboard and panelboard.

2.2 CONNECTIONS

All bolts, studs, machine screws, nuts, and tapped holes shall be in accordance with ASME B1.1. The sizes and threads of all conduit and fittings, tubing and fittings, and connecting equipment shall be in accordance with ASME B1.20.1. All ferrous fasteners shall have rust-resistant finish and all bolts and screws shall be equipped with approved locking devices. Manufacturer's standard threads and construction may be used on small items which, in the opinion of the Contracting Officer, are integrally replaceable, except that threads for external connections to these items shall meet the above requirements.

2.3 MOLDED CASE CIRCUIT BREAKERS

Molded case circuit breakers shall conform to the applicable requirements of NEMA AB 1 and UL 489. the circuit breakers shall be manually-operated, shall be quick-make, quick-break, common trip type, and shall be of automatic-trip type unless otherwise specified or indicated on the drawings. All poles of each breaker shall be operated simultaneously by means of a common handle. The operating handles shall clearly indicate whether the breakers are in "On" or "Off" position. Personnel safety line terminal shields shall be provided for each breaker. The circuit breakers shall be products of only one manufacturer, and shall be interchangeable when of the same frame size.

2.3.1 Trip Units

Except as otherwise noted, the circuit breakers, of frame sizes and the trip unit ratings as shown on the drawings, shall be provided with combination thermal and instantaneous magnetic or solid state trip units. The Government reserves the right to change the indicated trip ratings, within frame limits, of the trip devices at the time the shop drawings are submitted for approval. The breaker trip units shall be interchangeable and the instantaneous magnetic trip units shall be adjustable on frame sizes larger than 150 amperes. Nonadjustable instantaneous magnetic trip units shall be set at approximately 10 times the continuous current ratings of the circuit breakers.

2.3.2 480-Volt AC Circuits

Circuit breakers for 480-volt or 277/480-volt ac circuits shall be rated 600 volts ac, and shall have an UL listed minimum interrupting capacity of 14,000 symmetrical amperes at 600 volts ac or as indicated on drawings.

2.3.3 120/240-Volt AC Circuits

Circuit breakers for 120-volt ac circuits shall be rated not less than 120/240 volts ac, and shall have a UL listed minimum interrupting capacity of 10,000symmetrical amperes.

2.4 TERMINAL BLOCKS

Control circuit terminal blocks for control wiring shall be molded or fabricated type with barriers, rated not less than 600 volts. The terminals shall be removable binding, fillister or washer head screw type, or of the stud type with contact and locking nuts. The terminals shall be not less than No. 10 in size and shall have sufficient length and space for connecting at least two indented terminals for 10 AWG conductors to each terminal. The terminal arrangement shall be subject to the approval of the Contracting Officer and not less than four (4) spare terminals or 10 percent, whichever is greater, shall be provided on each block or group of blocks. Modular, pull apart, terminal blocks will be acceptable provided they are of the channel or rail-mounted type. The Contractor shall submit data showing that the proposed alternate will accommodate the specified number of wires, are of adequate current-carrying capacity, and are

constructed to assure positive contact between current-carrying parts.

2.4.1 Types of Terminal Blocks

2.4.1.1 Load Type

Load terminal blocks rated not less than 600 volts and of adequate capacity shall be provided for the conductors for NEMA Size 3 and smaller motor controllers and for other power circuits except those for feeder tap units. The terminals shall be of either the stud type with contact nuts and locking nuts or of the removable screw type, having length and space for at least two indented terminals of the size required on the conductors to be terminated. For conductors rated more than 50 amperes, screws shall have hexagonal heads. Conducting parts between connected terminals shall have adequate contact surface and cross-section to operate without overheating. Each connected terminal shall have the circuit designation or wire number placed on or near the terminal in permanent contrasting color.

2.4.1.2 Marking Strips

White or other light-colored plastic marking strips, fastened by screws to each terminal block, shall be provided for wire designations. The wire numbers shall be made with permanent ink. The marking strips shall be reversible to permit marking both sides, or two marking strips shall be furnished with each block. Marking strips shall accommodate the two sets of wire numbers. Each device to which a connection is made shall be assigned a device designation in accordance with NEMA ICS 1 and each device terminal to which a connection is made shall be marked with a distinct terminal marking corresponding to the wire designation used on the Contractor's schematic and connection diagrams. The wire (terminal point) designations used on the Contractor's wiring diagrams and printed on terminal block marking strips may be according to the Contractor's standard practice; however, additional wire and cable designations for identification of remote (external) circuits shall be provided for the Government's wire designations. Prints of drawings submitted for approval will be so marked and returned to the Contractor for addition of the designations to the terminal strips and tracings, along with any rearrangement of points required.

2.5 PANELBOARDS

Panelboards shall consist of assemblies of molded-case circuit breakers with buses and terminal lugs for the control and protection of branch circuits to motors, heating devices and other equipment operating at 480 volts ac or less. Panelboards shall be UL 67 labeled. "Loadcenter" type panels are not acceptable. Panelboards shall be designed for installation in surface-mounted or flush-mounted cabinets accessible from the front only, as shown on the drawings. Panelboards shall be fully rated for a short-circuit current of 22,000 symmetrical amperes RMS ac or and indicated on drawings.

2.5.1 Enclosure

Enclosures shall meet the requirements of UL 50. All cabinets shall be

fabricated from sheet steel of not less than 3.5 millimeters (No. 10 gage) if flush-mounted or mounted outdoors, and not less than 2.7 millimeters (No. 12 gage) if surface-mounted indoors, with full seam-welded box ends. Cabinets mounted outdoors or flush-mounted shall be hot-dipped galvanized after fabrication. Cabinets shall be painted in accordance with paragraph PAINTING. Outdoor cabinets shall be of NEMA 3R raintight and conduit hubs welded to the cabinet. Front edges of cabinets shall be form-flanged or fitted with structural shapes welded or riveted to the sheet steel, for supporting the panelboard front. All cabinets shall be so fabricated that no part of any surface on the finished cabinet shall deviate from a true plane by more than 3 millimeters (1/8 inch). Holes shall be provided in the back of indoor surface-mounted cabinets, with outside spacers and inside stiffeners, for mounting the cabinets with a 15 millimeter (1/2 inch) clear space between the back of the cabinet and the wall surface. Flush doors shall be mounted on hinges that expose only the hinge roll to view when the door is closed. Each door shall be fitted with a combined catch and lock, except that doors over 600 millimeters (24 inches) long shall be provided with a three-point latch having a knob with a T-handle, and a cylinder lock. Two keys shall be provided with each lock, and all locks shall be keyed alike. Finished-head cap screws shall be provided for mounting the panelboard fronts on the cabinets. Enclosure shall have nameplates in accordance with paragraph NAMEPLATES. Directory holders, containing a neatly typed or printed directory under a transparent cover, shall be provided on the inside of panelboard doors.

2.5.2 Buses

All panelboards shall be of the dead-front type with buses and circuit breakers mounted on a plate or base for installation as a unit in a cabinet. All buses shall be of copper and shall be tin or silver-plated throughout. Copper bars and shapes for bus conductors shall conform to the applicable requirements of ASTM B 187 and ASTM B 317. The sizes of buses and the details of panelboard construction shall meet or exceed the requirements of NEMA PB 1. Suitable provisions shall be made for mounting the bus within panelboards and adjusting their positions in the cabinets. Terminal lugs required to accommodate the conductor sizes shown on the drawing, shall be provided for all branch circuits larger than No. 10 AWG. A grounding lug suitable for 1/0 AWG wire shall be provided for each panelboard.

2.5.3 Components

Each branch circuit, and the main buses where so specified or shown on the drawings, shall be equipped with molded-case circuit breakers having overcurrent trip ratings as shown on the drawings. The circuit breakers shall be of a type designed for bolted connection to buses in a panelboard assembly, and shall meet the requirements of paragraph MOLDED CASE CIRCUIT BREAKERS. Circuit breakers of the same frame size and rating shall be interchangeable.

2.6 PAINTING

Interior and exterior steel surfaces of equipment enclosures shall be thoroughly cleaned and then receive a rust-inhibitive phosphatizing or

equivalent treatment prior to painting. Exterior surfaces shall be free from holes, seams, dents, weld marks, loose scale or other imperfections. Interior surfaces shall receive not less than one coat of corrosion-resisting paint in accordance with the manufacturer's standard practice. Exterior surfaces shall be primed, filled where necessary, and given not less than two coats baked enamel with semigloss finish. Equipment located outdoors shall be ANSI Light Grey.

2.7 FACTORY TESTS

Each item of equipment supplied under this contract shall be given the manufacturer's routine factory tests and tests as specified below, to insure successful operation of all parts of the assemblies.

2.8 CONDUIT AND TUBING

2.8.1 Flexible Conduit, Steel and Plastic

General-purpose type, UL 1; liquid tight, UL 360 and UL 1660.

2.8.2 Intermediate Metal Conduit

UL 1242.

2.8.3 PVC Coated Rigid Steel Conduit

NEMA RN 1.

2.8.4 Rigid Plastic Conduit

NEMA TC 2, UL 651 and UL 651A.

2.9 CONDUIT AND DEVICE BOXES AND FITTINGS

2.9.1 Boxes, Metallic Outlet

NEMA OS 1 and UL 514A.

2.9.2 Boxes, Nonmetallic, Outlet and Flush-Device Boxes and Covers

NEMA OS 2 and UL 514C.

2.9.3 Boxes, Switches (Enclosed), Surface-Mounted

UL 98.

2.9.4 Fittings for Conduit and Outlet Boxes

UL 514B.

2.9.5 Fittings, PVC, for Use with Rigid PVC Conduit and Tubing

UL 514B

2.10 CONDUIT COATINGS PLASTIC RESIN SYSTEM

NEMA RN 1, Type A-40.

2.11 CONNECTORS, WIRE PRESSURE

UL 486A

2.12 ELECTRICAL GROUNDING AND BONDING EQUIPMENT

UL 467.

2.12.1 Ground Buss

The ground buss shall be bare conductor or flat copper in one piece, if practicable.

2.13 TRANSFORMERS

Single and three-phase transformers shall have two windings per phase. Full-capacity standard NEMA taps shall be provided in the primary windings of transformers unless otherwise indicated. Three-phase transformers shall be configured with (delta-wye) (wye-delta) windings except as indicated. "T" connections may be used for transformers rated 15kVA or below. Transformers supplying non-linear loads shall be UL listed as suitable for and have neutrals sized for 200 percent of rated current.

2.13.1 Transformers, Dry-Type

Transformers shall have 220 degrees C insulation system for transformers 15 kVA and greater and shall have 180 degrees C insulation system for transformers rated 10 kVA and less, with temperature rise not exceeding 115 degrees C under full-rated load in maximum ambient temperature of 40 degrees C. Transformer of 115 degrees temperature rise shall be capable of carrying continuously 115 percent of namplate kVA without exceeding insulation rating.

a. 600 Volts or Less Primary:

NEMA ST 20, UL 506, general purpose, dry-type, self-cooled and ventilated. Transformers shall be provided in NEMA 3R enclosure. Transformers shall be quiet type with maximum sound level at least 3 decibels less than NEMA standard level for transformer ratings indicated.

2.13.2 Average Sound Level

The average sound level in decibels (dB) of transformers shall not exceed the following dB level at 300 mm 12 inches for the applicable kVA rating range listed unless otherwise indicated:

KVA Range	dB Sound Level
1-50	50

51-150	55
151-300	58
301-500	60
501-700	62
701-1000	64
1001-1500	65
1501 & above	70

PART 3 EXECUTION

3.1 Shop Drawings

The Contractor shall, submit for the approval of the Contracting Officer six (6) copies of outline drawings of all equipment to be furnished under this contract, together with weights and overall dimensions. Drawings shall show the general arrangement and overall dimensions of the panelboards. These drawings shall show space requirements, details of any floor supports to be embedded in concrete and provisions for conduits for external cables.

The Contractor shall, submit for the approval of the Contracting Officer six (6) copies of outline drawings of all equipment to be furnished under this contract, together with weights and overall dimensions. Drawings shall show the general arrangement and overall dimensions of the panelboards. These drawings shall show space requirements, details of any floor supports to be embedded in concrete and provisions for conduits for external cables.

3.2 GROUNDING

Grounding shall be in conformance with NFPA 70, the contract drawings and the following specifications.

3.2.1 Ground Rods

The resistance to ground shall be measured using the fall-of-potential method described in IEEE Std 81. The maximum resistance of a driven ground shall not exceed 25 ohms under normally dry conditions. If this resistance cannot be obtained with a single rod, 1 additional rods not less than 1.8 meters 6 feet on centers. In high-gorund-resistance, UL listed chemically charged ground rods may be used. If the resultant resistance exceeds 25 ohms measured not less than 48 hours after rainfall, the Contracting Officer shall be notified immediately. Connections below grade shall be fusion welded. Connections above grade shall be fusion welded or shall use UL 467 approved connectors.

3.2.2 Grounding Conductors

A green equipment grounding conductor, sized in accordance with NFPA 70 shall be provided, regardless of the type of conduit. Equipment grounding bars shall be provided in all panelboards. All equipment grounding conductors, including metallic raceway systems used as such, shall be

bonded or joined together in each wiring box or equipment enclosure. Metallic raceways and grounding conductors shall be checked to assure that they are wired or bonded into a common junction. Metallic boxes and enclosures, if used, shall also be bonded to these grounding conductors by an approved means per NFPA 70. [When switches, or other utilization devices are installed, any designated grounding terminal on these devices shall also be bonded to the equipment grounding conductor junction with a short jumper.

3.3 WIRING METHODS

Wiring shall conform to NFPA 70, the contract drawings and the following specifications. Unless otherwise indicated, wiring shall consist of insulated conductors installed in rigid zinc-coated steel conduit. Wire fill in conduits shall be based on NFPA 70 for the type of conduit and wrie insulations specified.

3.3.1 Conduit and Tubing Systems

Conduit and tubing systems shall be installed as indicated. Conduit sizes shown are based on used of cooper conductors with insulation types as described in paragraph WIRING METHODS. Minimum size of raceways shall be 3/4 inch. Only metal conduits will be permitted when conduits are required by conformance to NFPA 70. Nonmetallic conduit and tubing may be used in damp, wet, or corrosive locations when permitted by NFPA 70 and the conduit or tubing system is provided with appropriate boxes, covers, clamps, screws or other appropriate type of fittings. Except as otherwise specified, IMC may be used as an option for rigi steel conduit in areas as permitted by NFPA. Raceways shall be concealed within finished walls, ceilings and floors unless otherwise shown. Raceways crossing structural expansion joints or seismic joints shall be provided with suitable expansion fittings or other suitable means to compensate for the building expansion and contraction and to provide for continuity of grounding.

3.3.2 Pull Wires

A pull wire shall be inserted in each empty raceway in which wiring is to be installed if the raceway is more than 15 meters 50 feet in length and contains more than the equivalent of two 90-degree bends, or where the raceway is more than 45 meters 150 feet in length. The pull wire shall be of No. 14 AWG zinc-coated steel, or of plastic having not less than 1.4 MPa (200psi) 200 pounds per square inch tensile strength. Not less than 10 inches of slack shall be left at each end of the pull wire.

3.3.3 Conduit Stub-Ups

Where conduits are to be stubbed up through concrete floors, a short elbow shall be installed below grade to transition from the horizontal run of conduit to a vertical run. A conduit-coupling fitting, threaded on the inside shall be installed, to allow terminating the conduit flush with the finished floor. Wiring shall be extended in rigid threaded conduit to equipment, except that where required, flexible conduit may be used 6 inches above the floor. Empty or spare conduit stub-ups shall be plugged flush with the finished floor with a threaded, recessed plug.

3.3.4 Below Slab-on-Grade or in the Ground

Electrical wiring below slab-on-grade shall be protected by a conduit system. Conduit passing vertically through slabs-on-grade shall be rigid steel or IMC conduits installed below slab-on-grade or in the earth shall be field wrapped with 0.254 mm 0.010 inch thick pipe-wrapping plastic tape applied with a 50 percent overlay, or shall have a factory-applied poly vinyl chloride, plastic resin or epoxy coating system.

3.3.5 Changes in Direction of Runs

Changes in direction of runs shall be made with symmetrical bends or cast-metal fittings. Field-made bends and offsets shall be made with an approved hickey or conduit-bending machine. Crushed or deformed raceways shall not be installed. Trapped raceways in damp and wet locations shall be avoided where possible. Lodgment of plaster, dirt, or trash in raceways, boxes, fittings and equipment shall be prevented during the course of construction. Clogged raceways shall be cleared of obstruction or shall be replaced.

3.3.6 Supports

Metallic conduits and tubing,and the support system to which they are attached, shall be securely and rigidly fastened in place to prevent vertical and horizontal movement at intervals of not more than 10 feet and within 3 feet of boxes, cabinets, and fittings, with approved pipe straps, wall brackets, conduit clamps, conduit hangers, threaded C-clamps, beam clamps, or ceiling trapeze. Loads and supports shall be coordinated with supporting structure to prevent damage or deformation to the structure. Loads shall not be applied to joist bridging. Attachment shall be by wood screws or screw-type nails to wood; by toggle bolts on hollow masonry units; by expansion bolts on concrete or brick; by machine screws, welded threaded studs, heat-treated or spring-steel-tension clamps on steel work. Nail-type nylon anchors or threaded studs driven in by a powder charge and provided with lock washers and nuts may be used in lieu of expansion bolts or machine screws. Raceways or pipe straps shall not be welded to steel structures. Cutting the main reinforcing bars in reinforced concrete beams or joists shall be avoided when drilling holes for support anchors. Holes drilled for support anchors, but not used, shall be filled. In partitions of light steel construction, sheet-metal screws may be used. Raceways shall not be supported using wire or nylon ties. Raceways shall be independently supported from the structure. Upper raceways shall not be used as a means of support for lower raceways. Supporting means shall not be shared between electrical raceways and mechanical piping or ducts. Cables and raceways shall not be supported by ceiling grids. Except where permitted by NFPA 70, wiring shall not be supported by ceiling support systems. Conduits shall be fastened to sheet-metal boxes and cabinets with two locknuts where required by NFPA 70, where insulating bushings are used, and where bushings cannot be brought into firm contact with the box; otherwise, a single locknut and bushing may be used. Threadless fittings for electrical metallic tubing shall be of a type approved for the conditions encountered. Additional support for horizontal runs is not required when EMT rests on steel stud cutouts.

3.3.7 Exposed Raceways

Exposed raceways shall be installed parallel or perpendicular to walls, structural members, or intersections of vertical planes and ceilings. Raceways under raised floors and above accessible ceilings shall be considered as exposed installations in accordance with NFPA 70 definitions.

3.3.8 Cables and Conductors

Installation shall conform to the requirements of NFPA 70.

3.4 BOXES AND SUPPORTS

Boxes shall be provided in the wiring or raceway systems where required by NFPA 70 for pulling of wires, making connections, and mounting of devices or fixtures. Pull boxes shall be furnished with screw-fastened covers. Indicated elevations are approximate, except where minimum mounting heights for hazardous areas are required by NFPA 70. Unless otherwise indicated, boxes for wall switches shall be mounted 48 inches above finished floors. Switch and outlet boxes located on opposite sides of fire rated walls shall be separated by a minimum horizontal distance of 24 inches. The total combined area of all box openings in fire rated walls shall not exceed 100 square inches per 100 square feet. Maximum box areas for individual boxes in fire rated walls vary with the manufacturer and shall not exceed the maximum specified for that box in UL Elec Const Dir. Only boxes listed in UL Elec Const Dir shall be used in fire rated walls.

3.4.1 Box Applications

Each box shall have not less than the volume required by NFPA 70 for number of conductors enclosed in box. Boxes for metallic raceways shall be listed for the intended use when located in normally wet locations, when flush or surface mounted on outside of exterior surfaces, or when located in hazardous areas. Boxes installed in wet locations and boxes installed flush with the outside of exterior surfaces shall be gasketed. Boxes for mounting lighting fixtures shall be not less than 4 inches square, or octagonal, except smaller boxes may be installed as required by fixture configuration, as approved. Cast-metal boxes with 3/32-inch wall thickness are acceptable. Large size boxes shall be NEMA 3R or as shown. Boxes for use in masonry-block or tile walls shall be square-cornered, tile-type, or standard boxes having square-cornered, tile-type covers.

3.4.2 Brackets and Fasteners

Boxes and supports shall be fastened to wood with wood screws or screw-type nails of equal holding strength, with bolts and metal expansion shields on concrete or brick, with toggle bolts on hollow masonry units, and with machine screw or welded studs on steel work. Threaded studs driven in by powder charge and provided with lockwashers and nuts, or nail-type nylon anchors may be used in lieu of expansion shields, or machine screws. Penetration of more than 1-1/2 inches into reinforced-concrete beams or more than 3/4 inch into reinforced-concrete joists shall avoid cutting any main reinforcing steel. The use of brackets which depend on gypsum

wallboard or plasterboard for primary support will not be permitted. In partitions of light steel construction, bar hangers with 1 inch long studs, mounted between metal wall studs or metal box mounting brackets shall be used to secure boxes to the building structure. When metal box mounting brackets are used, additional box support shall be provided on the side of the box opposite the brackets. This additional box support shall consist of a minimum 12 inch long section of wall stud, bracketed to the opposite side of the box and secured by two screws through the wallboard on each side of the stud. Metal screws may be used in lieu of the metal box mounting brackets.

3.4.3 Mounting in Walls

In walls of concrete, tile, or other non-combustible material, boxes shall be installed so that the edge of the box is not recessed more than 1/4 inch from the finished surface. Boxes mounted in combustible walls shall be mounted flush with the finished surface. Boxes installed for concealed wiring shall be provided with suitable extension rings or plaster covers, as required. The bottom of boxes installed in masonry-block walls for concealed wiring shall be mounted flush with the top of a block to minimize cutting of the blocks, and boxes shall be located horizontally to avoid cutting webs of block. Separate boxes shall be provided for flush or recessed fixtures when required by the fixture terminal operating temperature, and fixtures shall be readily removable for access to the boxes unless ceiling access panels are provided.

3.5 PANELBOARDS

Circuit breakers and switches used as a motor disconnecting means shall be capable of being locked in the open position. Door locks shall be keyed alike. Nameplates shall be as approved. Directories shall be typed to indicate loads served by each circuit and mounted in a holder behind a clear protective covering. Busses shall be copper.

3.5.1 Panelboards

Panelboards shall be circuit breaker or fusible switch equipped as indicated on the drawings. Fusible panelboards of the multipole type may have doors over individual circuits and trim over the wiring gutter only, provided each circuit is arranged for locking in the open and closed positions and each branch circuit has an individual identification card in a cardholder with a clear plastic covering.

3.6 MOTOR-DISCONNECT MEANS

Each motor shall be provided with a disconnecting means when required by NFPA 70 even though not indicated. For single-phase motors, a single or double pole toggle switch, rated only for alternating current, will be acceptable for capacities less than 30 amperes, provided the ampere rating of the switch is at least 125 percent of the motor rating. Switches shall disconnect all ungrounded conductors.

3.5.1 EQUIPMENT CONNECTIONS

Wiring not furnished and installed under other sections of the specifications for the connection of electrical equipment as indicated on the drawings shall be furnished and installed under this section of the specifications. Connections shall comply with the applicable requirements of paragraph WIRING METHODS. Flexible conduits 6 feet or less in length shall be provided to all electrical equipment subject to periodic removal, vibration, or movement and for all motors. All motors shall be provided with separate grounding conductors. Liquid-tight conduits shall be used in damp or wet locations.

3.7 REPAIR OF EXISTING WORK

The work shall be carefully laid out in advance, and where cutting, channeling, chasing, or drilling of floors, walls, partitions, ceiling, or other surfaces is necessary for the proper installation, support, or anchorage of the conduit, raceways, or other electrical work, this work shall be carefully done, and any damage to building, piping, or equipment shall be repaired by skilled mechanics of the trades involved at no additional cost to the Government.

3.8 FIELD TESTING

Field testing shall be performed in the presence of the Contracting Officer. The Contractor shall notify the Contracting Officer 4 days prior to conducting tests. The Contractor shall furnish all materials, labor, and equipment necessary to conduct field tests. The Contractor shall perform all tests and inspection recommended by the manufacturer unless specifically waived by the Contracting Officer. The Contractor shall maintain a written record of all tests which includes date, test performed, personnel involved, devices tested, serial number and name of test equipment, and test results. All field test reports will be signed and dated by the Contractor.

3.8.1 Safety

The Contractor shall provide and use safety devices such as rubber gloves, protective barriers, and danger signs to protect and warn personnel in the test vicinity. The Contractor shall replace any devices or equipment which are damaged due to improper test procedures or handling.

3.8.2 Dry-Type Transformer Tests

The following field tests shall be performed on all dry-type transformers 15 kVA and above.

a. Insulation resistance test phase-to-ground, each phase.

b. Turns ratio test.

3.9 OPERATING TESTS

After the installation is completed, and at such time as the Contracting Officer may direct, the Contractor shall conduct operating tests for approval. The equipment shall be demonstrated to operate in accordance

with the specified requirements. An operating test report shall be submitted in accordance with paragraph FIELD TEST REPORTS.

3.10 FIELD SERVICE

3.10.1 Onsite Training

The Contractor shall conduct a training course for the operating staff as designated by the Contracting Officer. The training period shall consist of a total of 4 hours of normal working time and shall start after the system is functionally completed but prior to final acceptance tests. The course instruction shall cover pertinent points involved in operating, starting, stopping, servicing the equipment, as well as all major elements of the operation and maintenance manuals. Additionally, the course instructions shall demonstrate all routine maintenance operations.

3.11 ACCEPTANCE

Final acceptance of the facility will not be given until the Contractor has successfully completed all tests and after all defects in installation, material or operation have been corrected.

-- End of Section --

SECTION TABLE OF CONTENTS

DIVISION 16 - ELECTRICAL

SECTION 16520N

EXTERIOR LIGHTING

PART 1 GENERAL

1.1 REFERENCES
1.2 RELATED REQUIREMENTS
1.3 DEFINITIONS
1.3.1 Average Life
1.3.2 Groundline Section
1.4 SUBMITTALS
1.5 QUALITY ASSURANCE
1.5.1 Drawing Requirements
1.5.1.1 Luminaire Drawings
1.5.1.2 Poles
1.5.2 Test Data for Luminaires
1.6 DELIVERY, STORAGE, AND HANDLING
1.6.1 Steel Poles

PART 2 PRODUCTS

2.1 PRODUCT COORDINATION
2.2 LUMINAIRES
2.2.1 Lamps
2.2.1.1 High-Pressure Sodium (HPS) Lamps
2.2.2 Ballasts for High-Intensity-Discharge (HID) Luminaires
2.3 LIGHTING CONTACTOR
2.4 TIME SWITCH
2.5 POLES
2.5.1 Steel Poles
2.6 BRACKETS AND SUPPORTS
2.7 POLE FOUNDATIONS

PART 3 EXECUTION

3.1 INSTALLATION OF POLES
3.1.1 Steel
3.1.2 Pole Setting
3.2 GROUNDING
3.3 FIELD QUALITY CONTROL

-- End of Section Table of Contents --

SECTION 16520N

EXTERIOR LIGHTING

PART 1 GENERAL

1.1 REFERENCES

The publications listed below form a part of this specification to the extent referenced. The publications are referred to in the text by the basic designation only.

AMERICAN ASSOCIATION OF STATE HIGHWAY AND TRANSPORTATION OFFICIALS (AASHTO)

AASHTO LTS-3	(1994; R 1998) Structural Supports for Highway Signs, Luminaires and Traffic Signals

AMERICAN NATIONAL STANDARDS INSTITUTE (ANSI)

ANSI C136.20	(1990) Roadway Lighting Equipment - Fiber-Reinforced Plastic (FRP) Lighting Poles
ANSI C136.21	(1987; R 1997) Roadway Lighting - Vertical Tenons Used with Post-Top-Mounted Luminaires
ANSI O5.1	(1992) Wood Poles - Specifications and Dimensions

AMERICAN SOCIETY FOR TESTING AND MATERIALS (ASTM)

ASTM A 123/A 123M	(2001; Rev. A) Zinc (Hot-Dip Galvanized) Coatings on Iron and Steel Products
ASTM A 153/A 153M	(2001; Rev. A) Zinc Coating (Hot-Dip) on Iron and Steel Hardware
ASTM B 108	(2001) Aluminum-Alloy Permanent Mold Castings
ASTM C 1089	(1997) Spun Cast Prestressed Concrete Poles
ASTM G 154	(2000) Operating Fluorescent Light Apparatus for UV Exposure of Nonmetallic Materials

AMERICAN WOOD-PRESERVERS' ASSOCIATION (AWPA)

AWPA C1	(2000) All Timber Products - Preservative Treatment by Pressure Processes
AWPA C4	(1999) Poles - Preservative Treatment by Pressure Processes
AWPA M6	(1997) Brands Used on Forest Products

ILLUMINATING ENGINEERING SOCIETY OF NORTH AMERICA (IESNA)

IES LHBK	(2000) Lighting Handbook, Reference and Application

INSTITUTE OF ELECTRICAL AND ELECTRONICS ENGINEERS (IEEE)

IEEE C2	(2002) National Electrical Safety Code (ANSI/IEEE)
IEEE C136.3	(1995) Roadway Lighting Equipment - Luminaire Attachments
IEEE C136.10	(1996) Roadway Lighting Equipment - Locking-Type Photocontrol Devices and Mating Receptacle Physical and Electrical Interchangeability and Testing
IEEE C136.13	(1992; R 1996) Roadway Lighting - Metal Brackets for Wood Poles

NATIONAL ELECTRICAL MANUFACTURERS ASSOCIATION (NEMA)

NEMA C78.41	(2001) Electric Lamps - Low-Pressure Sodium Lamps
NEMA C78.42	(1995) Electric Lamps - High-Pressure Sodium Lamps
NEMA C78.1375	(1996) Electric Lamps - 400-Watt, M59 Single-Ended Metal-Halide Lamps
NEMA C78.1376	(1996) Electric Lamps - 1000-Watt, M47 Single-Ended Metal-Halide Lamps
NEMA C78.1377	(1996) Electric Lamps - 175-Watt, M57 Single-Ended Metal-Halide Lamps
NEMA C78.1378	(1996) Electric Lamps - 250-Watt, M58 Single-Ended Metal-Halide Lamps
NEMA C78.1379	(1996) Electric Lamps - 1500-Watt, M48 Single-Ended Metal-Halide Lamps
NEMA C78.1381	(1998) Electric Lamps - 70-Watt, M85

	Double-Ended Metal-Halide Lamps
NEMA C82.4	(1992) Ballasts for High-Intensity-Discharge and Low-Pressure Sodium Lamps (Multiple-Supply Type)
NEMA ICS 2	(2000) Industrial Control and Systems Controllers, Contactors, and Overload Relays, Rated 600 Volts
NEMA ICS 6	(1993; R 2001) Industrial Control and Systems Enclosures
NATIONAL FIRE PROTECTION ASSOCIATION (NFPA)	
NFPA 70	(2002) National Electrical Code
U.S. DEPARTMENT OF AGRICULTURE (USDA)	
RUS 1728F-700	(1993) Wood Poles, Stubs, and Anchor Logs
UNDERWRITERS LABORATORIES (UL)	
UL 773	(1995; R 2000, Bul. 2001) Plug-In, Locking Type Photocontrols for Use with Area Lighting
UL 773A	(1995; R 1999) Nonindustrial Photoelectric Switches for Lighting Control
UL 1029	(1994; R 2001, Bul. 2000) High-Intensity-Discharge Lamp Ballasts
UL 1598	(2000; Bul. 2000 and 2001) Luminaires

1.2 RELATED REQUIREMENTS

Section 16050N, "Basic Electrical Materials and Methods," applies to this section, with the additions and modifications specified herein.

1.3 DEFINITIONS

1.3.1 Average Life

Time after which 50 percent will have failed and 50 percent will have survived under normal conditions.

1.3.2 Groundline Section

That portion between one foot above and 2 feet below the groundline.

1.4 SUBMITTALS

Submit the following in accordance with Section 01330, "Submittal

Procedures."

SD-03 Product Data

Luminaires; G

Lamps; G

Ballasts; G

Lighting contactor; G

Time switch; G

SD-06 Test Reports

Test Data for Luminaires; G

Operating test; G

Submit operating test results as stated in paragraph entitled "Field Quality Control."

1.5 QUALITY ASSURANCE

1.5.1 Drawing Requirements

1.5.1.1 Luminaire Drawings

Include dimensions, effective projected area (EPA), accessories, and installation and construction details. Photometric data, including zonal lumen data, average and minimum ratio, aiming diagram, and [computerized] candlepower distribution data shall accompany shop drawings.

1.5.1.2 Poles

Include dimensions, wind load determined in accordance with AASHTO LTS-3, pole deflection, pole class, and other applicable information.

1.5.2 Test Data for Luminaires

a. Distribution data according to IES classification type as defined in IES LHBK.

b. Computerized horizontal illumination levels in footcandles at ground level, taken every 10 feet. Include average maintained footcandle level and maximum and minimum ratio.

1.6 DELIVERY, STORAGE, AND HANDLING

1.6.1 Steel Poles

Do not store poles on ground. Support poles so they are at least one foot above ground level and growing vegetation. Do not remove factory-applied

pole wrappings until just before installing pole.

PART 2 PRODUCTS

2.1 PRODUCT COORDINATION

Products and materials not considered to be lighting equipment or lighting fixture accessories are specified in Section 16302N, "Underground and Above-Ground Distribution".

2.2 LUMINAIRES

UL 1598. Provide luminaires as indicated. Provide luminaires complete with lamps of number, type, and wattage indicated. Details, shapes, and dimensions are indicative of the general type desired, but are not intended to restrict selection to luminaires of a particular manufacturer.

2.2.1 Lamps

2.2.1.1 High-Pressure Sodium (HPS) Lamps

NEMA C78.42 Wattage as indicated. HPS lamps shall have average rated life of 24,000 hours (minimum).

2.2.2 Ballasts for High-Intensity-Discharge (HID) Luminaires

UL 1029 and NEMA C82.4, and shall be constant wattage autotransformer (CWA) or regulator, high power-factor type unless otherwise indicated. Provide single-lamp ballasts which shall have a minimum starting temperature of minus 30 degrees C. Ballasts shall be:

a. Designed to operate on voltage system to which they are connected.

b. Constructed so that open circuit operation will not reduce the average life.

HPS ballasts shall have a solid-state igniter/starter with an average life in the pulsing mode of 10,000 hours at the intended ambient temperature. Igniter case temperature shall not exceed 90 degrees C.

2.3 LIGHTING CONTACTOR

As specified on the construction drawings.

2.4 TIME SWITCH

As specified in construction drawings.

2.5 POLES

Provide poles designed for wind loading of 161 km/hr, 100 miles per hour determined in accordance with AASHTO LTS-3 while supporting luminaires having effective projected areas indicated. Poles shall be made by the same manufacturer as the luminaire and shall be coordinated with the

luminaire specified. Poles shall be anchor-base type designed for use with underground supply conductors. Poles shall have oval-shaped handhole having a minimum clear opening of 2.5 by 5 inches. Handhole cover shall be secured by stainless steel captive screws. Poles shall have an internal grounding connection accessible from the handhole near the bottom of each pole. Scratched, stained, chipped, or dented poles shall not be installed.

2.5.1 Steel Poles

AASHTO LTS-3. Provide steel poles having minimum 11-gage steel with minimum yield/strength of 48,000 psi and hot-dipped galvanized in accordance with ASTM A 123/A 123M factory finish. Provide a pole grounding connection designed to prevent electrolysis when used with copper ground wire. Pole shall be anchor bolt mounted type. Pole shafts shall be one piece. Poles shall be welded construction with no bolts, rivets, or other means of fastening except as specifically approved. Pole markings shall be approximately 3 to 4 feet above grade and shall include manufacturer, year of manufacture, top and bottom diameters, length, and a loading tree. Base covers for steel poles shall be structural quality hot-rolled carbon steel plate having a minimum yield of 36,000 psi.

2.6 BRACKETS AND SUPPORTS

IEEE C136.3, IEEE C136.13, and ANSI C136.21, as applicable. Slip-fitter brackets may be used, but brackets shall be coordinated to luminaires provided, and brackets for use with one type of luminaire shall be identical.

2.7 POLE FOUNDATIONS

Anchor bolts shall be steel rod having a minimum yield strength of 50,000 psi; the top 12 inches of the rod shall be galvanized in accordance with ASTM A 153/A 153M. Concrete shall be as specified in Section 03307, "Concretefor Minor Structures.", but no less than 3000 psi.

PART 3 EXECUTION

3.1 INSTALLATION OF POLES

IEEE C2, NFPA 70, and to the requirements specified herein.

3.1.1 Steel

Provide pole foundations with galvanized steel anchor bolts, threaded at the top end and bent 90 degrees at the bottom end. Provide galvanized nuts, washers, and ornamental covers for anchor bolts. Concrete for anchor bases, polyvinyl chloride (PVC) conduit ells, and ground rods shall be as specified in Section 16302, "Underground and Above-Ground Distribution." Thoroughly compact backfill with compacting arranged to prevent pressure between conductor, jacket, or sheath and the end of conduit ell. Adjust poles as necessary to provide a permanent vertical position with the bracket arm in proper position for luminaire location.

3.1.2 Pole Setting

Depth shall be as indicated. Poles in straight runs shall be in a straight line. Dig holes large enough to permit the proper use of tampers to the full depth of the hole. Place backfill in the hole in 6 inch maximum layers and thoroughly tamp. Place surplus earth around the pole in a conical shape and pack tightly to drain water away.

3.2 GROUNDING

Ground noncurrent-carrying parts of equipment including metal poles, luminaires, mounting arms, brackets, and metallic enclosures as specified in Section 16302, "Underground and Above-Ground Distribution." Where copper grounding conductor is connected to a metal other than copper, provide specially treated or lined connectors suitable for this purpose.

3.3 FIELD QUALITY CONTROL

Operating test

Upon completion of installation, conduct an operating test to show that the equipment operates in accordance with the requirements of this section.

-- End of Section --