IFB No. DACW09-03-B-0004

U.S. ARMY CORPS
OF ENGINEERS
LOS ANGELES DISTRICT

WATER SUPPLY / MAINTENANCE ROAD

RIO SALADO, PHOENIX

MARICOPA COUNTY, ARIZONA

Construction Solicitation and Specifications

UNRESTRICTED

APRIL 2003

TABLE OF CONTENTS

DIVISION 00 – BIDDING REQUIREMENTS, CONTRACT FORMS AND CONTRACT CONDITIONS

00COVER COVER
00TOC TABLE OF CONTENTS
SF1442 SOLICITATION, OFFER AND AWARD (Standard Form 1442 Front and Back)
00010 BID SCHEDULE AND NOTES
00100 INSTRUCTIONS TO BIDDERS
00600 REPRESENTATIONS AND CERTIFICATIONS
00700 CONTRACT CLAUSES
00800 SPECIAL CONTRACT REQUIREMENTS
00850 WAGE RATES

DIVISION 01 - GENERAL REQUIREMENTS

01200 GENERAL REQUIREMENTS
01200b GENERAL REQUIREMENTS - FIGURES
01270 MEASUREMENT AND PAYMENT
01312 QUALITY CONTROL SYSTEM (QCS)
01330 SUBMITTAL PROCEDURES
01330b SUBMITTAL REGISTER
01330c ENG FORM 4025 (Front and Back)
01355 ENVIRONMENTAL PROTECTION
01356 STORM WATER POLLUTION PREVENTION MEASURES
01420 SOURCES FOR REFERENCE PUBLICATIONS
01451 CONTRACTOR QUALITY CONTROL

DIVISION 02 - SITE WORK

02230 CLEARING AND GRUBBING
02300 EARTHWORK
02316 EXCAVATION, TRENCHING, AND BACKFILLING FOR UTILITIES SYSTEMS
02371 WIRE MESH GABIONS
02373 GEOTEXTILE
02466 DRILLED FOUNDATION PIERS
02510 WATER SUPPLY AND DISTRIBUTION SYSTEM PIPELINES
02630 STORM-DRAINAGE SYSTEM
02661 LLDPE LINERS
02722 AGGREGATE BASE COURSE
02741 HOT-MIX ASPHALT (HMA) FOR ROADS
02821 FENCING

DIVISION 03 - CONCRETE

03101 FORMWORK FOR CONCRETE
03150 EXPANSION JOINTS, CONTRACTION JOINTS, AND WATERSTOPS
03200 CONCRETE REINFORCEMENT
03307 CONCRETE FOR MINOR STRUCTURES
03371 SHOTCRETE
03410 PRECAST WETWELLS
03600 GROUT

DIVISION 04 - MASONRY

04200 MASONRY

DIVISION 05 - METALS

05120 STRUCTURAL STEEL
05500 MISCELLANEOUS METAL

DIVISION 07 - THERMAL & MOISTURE PROTECTION

07920 JOINT SEALANTS

DIVISION 09 - FINISHES

09900 PAINTS AND COATINGS
09915 COLOR SCHEDULE
09971 COATING OF EQUIPMENT

DIVISION 11 - EQUIPMENT

11212 PUMPS: WATER DISTRIBUTION PUMPING STATION

DIVISION 13 - SPECIAL CONSTRUCTION

13121 PRE-FABRICATED STEEL BRIDGES
13405 PROCESS CONTROL

DIVISION 15 - MECHANICAL

15050 BASIC MECHANICAL MATERIALS AND METHODS
15060 PIPING SUPPORT SYSTEMS
15955 PIPING LEAKAGE TESTING

DIVISION 16 - ELECTRICAL

16010 BASIC ELECTRICAL REQUIREMENTS
16050 BASIC ELECTRICAL MATERIALS AND METHODS
16110 RACEWAYS
16120 CONDUCTORS
16425 SWITCHBOARDS
16450 GROUNDING
16520 EXTERIOR LIGHTING
16950 ELECTRICAL TESTING

-- End of Project Table of Contents --

SOLICITATION, OFFER, AND AWARD *(Construction, Alteration, or Repair)*	1. SOLICITATION NO. DACW09-03-B-0004	2. TYPE OF SOLICITATION ☒ SEALED BID *(IFB)* ☐ NEGOTIATED *(RFP)*	3. DATE ISSUED 18 April 2003	PAGE OF PAGES

IMPORTANT - The "offer" section on the reverse must be fully completed by offeror.

4. CONTRACT NO.	5. REQUISITION/PURCHASE REQUEST NO.	6. PROJECT NO.

7. ISSUED BY CODE	8. ADDRESS OFFER TO
CONTRACTING DIVISION P.O. Box 532711 Los Angeles, CA 90053-2325	SEE ITEM 7

9. FOR INFORMATION CALL:	A. NAME	B. TELEPHONE NO. *(Include area code) (NO COLLECT CALLS)*
	SANDRA OQUITA	(213) 452-3249

SOLICITATION

NOTE: In sealed bid solicitations "offer" and "offeror" mean "bid" and "bidder".

10. THE GOVERNMENT REQUIRES PERFORMANCE OF THE WORK DESCRIBED IN THESE DOCUMENTS *(Title, identifying no., date):*

WATER SUPPLY/MAINTENANCE ROADS, Rio Salado, Phoenix, Arizona

This project consists of construction of grading and earthwork, water distribution system, maintenance roads, public access improvements, habitat planting, wetlands, and gateway features. The project limit extends from 19th Avenue to 16th Street. This solicitation is an unrestricted procurement. The North American Industry Classification System (NAICS) is 237990. All Other Heavy Construction Except Dredging and Surface Cleanup Activities, 28.5 M average annual gross revenue for the last three (3) fiscal years. Estimated cost range of the Project is over $10,000,000.

11. The Contractor shall begin performance within 10 calendar days and complete it within 360 calendar days after receiving

☐ award, ☒ notice to proceed. This performance period is ☒ mandatory, ☐ negotiable. *(See* SECTION 00800 *.)*

12A. THE CONTRACTOR MUST FURNISH ANY REQUIRED PERFORMANCE AND PAYMENT BONDS? *(If "YES," indicate within how may calendar days after award in Item 12B.)*	12B. CALENDAR DAYS
☒ YES ☐ NO	10

13. ADDITIONAL SOLICITATION REQUIREMENTS:

A. Sealed offers in original and 0 copies to perform the work required are due at the place specified in Item 8 by 1:00 PM *(hour)* local time 20 May 2003 *(date).* If this is a sealed bid solicitation, offers will be publicly opened at that time. Sealed envelopes containing offers shall be marked to show the offeror's name and address, the solicitation number, and the date and time offers are due.

B. An offer guarantee ☒ is, ☐ is not required.

C. All offers are subject to the (1) work requirements, and (2) other provisions and clauses incorporated in the solicitation in full text or by reference.

D. Offers providing less than 60 calendar days for Government acceptance after the date offers are due will not be considered and will be rejected.

OFFER *(Must be fully completed by offeror)*

14. NAME AND ADDRESS OF OFFEROR *(Include ZIP Code)*	15. TELEPHONE NO. *(Include area code)*
	16. REMITTANCE ADDRESS *(Include only if different than Item 14)* SEE ITEM 14
CODE FACILITY CODE	

17. The offeror agrees to perform the work required at the prices specified below in strict accordance with the terms of this solicitation, if this offer is accepted by the Government in writing within _____ calendar days after the date offers are due. *(Insert any number equal to or greater than the minimum requirement stated in Item 13D. Failure to insert any number means the offeror accepts the minimum in Item 13D.*

AMOUNTS ▶ SEE SCHEDULE OF PRICES

18. The offeror agrees to furnish any required performance and payment bonds.

19. ACKNOWLEDGMENT OF AMENDMENTS
(The offeror acknowledges receipt of amendments to the solicitation - give number and date of each)

AMENDMENT NO.										
DATE										

20A. NAME AND TITLE OF PERSON AUTHORIZED TO SIGN OFFER *(Type or print)*	20B. SIGNATURE	20C. OFFER DATE

AWARD *(To be completed by Government)*

21. ITEMS ACCEPTED:

22. AMOUNT	23. ACCOUNTING AND APPROPRIATION DATA

24. SUBMIT INVOICES TO ADDRESS SHOWN IN *(4 Copies unless otherwise specified)* ▶	ITEM	25. OTHER THAN FULL AND OPEN COMPETITION PURSUANT TO ☐ 10 U.S.C 2304(c) ( ) ☐ 41 U.S.C 253(c) ( )
26. ADMINISTERED BY	CODE	27. PAYMENT WILL BE MADE BY

CONTRACTING OFFICER WILL COMPLETE ITEM 28 OR 29 AS APPLICABLE

☐ 28. NEGOTIATED AGREEMENT *Contractor is required to sign this document and return _____ copies to issuing office.)* Contractor agrees to furnish and deliver all items or perform all work requirements identified on this form and any continuation sheets for the consideration stated in this contract. The rights and obligations of the parties to this contract shall be governed by (a) this contract award, (b) the solicitation, and (c) the clauses, representations, certifications, and specifications incorporated by reference in or attached to this contract.

☐ 29. AWARD *(Contractor is not required to sign this document.)* Your offer on this solicitation is hereby accepted as to the items listed. This award con- summates the contract, which consists of (a) the Government solicitation and your offer, and (b) this contract award. No further contractual document is necessary.

30A. NAME AND TITLE OF CONTRACTOR OR PERSON AUTHORIZED TO SIGN *(Type or print)*		31A. NAME OF CONTRACTING OFFICER *(Type or print)*	
30B. SIGNATURE	30C. DATE	31B. UNITED STATES OF AMERICA BY	31C. AWARD DATE

SECTION 00010

BID SCHEDULE

PART 1 GENERAL

Note : Some of the lump sum items reference drawings and plans that utilize English units of measurements.

1.1 Bid Items

Item	Description	Quantity	Unit	Unit Price	Amount
0001	CLEARING, GRUBBING, AND DEMOLITION	58	ACRE	$____.__	$_____.__
0002	GENERAL SITE EXCAVATION				
0002A	FIRST 43,231 CUBIC YARDS	43,231	CY	$_____.__	$_____.__
0002B	OVER 43,231 CUBIC YARDS	10,808	CY	$_____.__	$_____.__
0003	GENERAL SITE FILL & EMBANKMENTS				
0003A	FIRST 143,360 CUBIC YARDS	143,360	CY	$_____.__	$_____.__
0003B	OVER 143,360 CUBIC YARDS	35,841	CY	$_____.__	$_____.__
0004	EXCAVATION AND DISPOSAL OF CONSTRUCTION DEBRIS, HOUSEHOLD WASTE, INERT MATERIAL, AND MIXED WASTE				
0004A	FIRST 2,000 CUBIC YARDS	2,000	CY	$_____.__	$_____.__
0004B	OVER 2,000 CUBIC YARDS	400	CY	$_____.__	$_____.__
0005A	GABION BASKET SLOPE PROTECTION	2,202	SY	$_____.__	$_____.__
0005B	GABION MATTRESS SLOPE PROTECTION	12,000	SY	$_____.__	$_____.__
0006	FENCE	1.00	LS	$_____.__	$_____.__
0007	STORM DRAINAGE	1.00	LS	$_____.__	$_____.__
0008	7TH STREET RESERVOIR LOW FLOW CHANNEL FEED CONVEYANCE	1.00	LS	$_____.__	$_____.__

Item	Description	Quantity	Unit	Unit Price	Amount
0009	7TH AVENUE RESERVOIR LOW FLOW CHANNEL FEED CONVEYANCE	1.00	LS	$_____.__	$_____.__
0010	LLDPE LINED CANAL	1.00	LS	$_____.__	$_____.__
0011	PRESSURIZED WATER DISTRIBUTION PIPING 10" HDPE	26,432	LF	$_____.__	$_____.__
0012	PRESSURIZED WATER DISTRIBUTION PIPING CONNECTED TO BRIDGE 8" DIP	1,498	LF	$_____.__	$_____.__
0013	RAW WATER SUPPLY PIPING 14" HDPE	16,200	LF	$_____.__	$_____.__
0014	RAW WATER SUPPLY PIPING CONNECTED TO BRIDGE 12" DIP	1,600	LF	$_____.__	$_____.__
0015	7TH STREET WATER DISTRIBUTION PUMPING STATION	1.00	LS	$_____.__	$_____.__
0016	7TH AVENUE WATER DISTRIBUTION PUMPING STATION	1.00	LS	$_____.__	$_____.__
0017	ELECTRICAL AND CONTROLS CONDUIT AND WIRING	1.00	LS	$_____.__	$_____.__
0018	RESERVOIR LINER AND EDGE TREATMENT	1.00	LS	$_____.__	$_____.__
0019	MAINTENANCE ROAD BASE COURSE CONNECTED TO BRIDGE 12" DIP	43,584	CY	$_____.__	$_____.__
0020	MAINTENANCE ROAD ASPHALTIC CONCRETE	3,138	TONS	$_____.__	$_____.__
0021	SOFT TRAIL	1.00	LS	$_____.__	$_____.__
0022	11TH AVENUE MAINTENANCE ROAD BRIDGE (NORTH BANK)	1.00	LS	$_____.__	$_____.__
0023	CENTRAL AVENUE MAINTENANCE ROAD BRIDGE (NORTH BANK)	1.00	LS	$_____.__	$_____.__

Item	Description	Quantity	Unit	Unit Price	Amount
0024	TIRE EXCAVATION				
0024A	FIRST 90 TONS	90	TONS	$_____.__	$_____.__
0024B	OVER 90 TONS	60	TONS	$_____.__	$_____.__
0025	DOUBLE CONTAINMENT FOR 10" PRESSURE DSW PIPING	3,200	LF	$_____.__	$_____.__
0026	DOUBLE CONTAINMENT FOR 14" RAW WATER SUPPLY PIPING	3,950	LF	$_____.__	$_____.__

TOTAL ESTIMATED AMOUNT **$_____._____**

Abbreviations:

LF	=	LINEAR FOOT
CY	=	CUBIC YARD
SY	=	SQUARE YARD
TONS	=	TON (2000 LBS)
LS	=	LUMP SUM
ACRE	=	ACRE

SECTION 00010
SOLICITATION CONTRACT FORM

PRICING SCHEDULE/BIDDERS NOTES

1. All extensions of the unit prices shown will be subject to verification by the Government. In case of variation between the unit price and the extension, the unit price will be considered to be the bid.

2. If a modification to a bid based on unit prices is submitted which provides for a lump sum adjustment to the total estimated amount, the application of the lump sum adjustment to each unit price in the Price Schedule must be stated. If it is not stated, the bidder agrees that the lump sum adjustment shall be applied on a pro rata basis to every unit price in the Price Schedule.

3. For the purpose of initial evaluation of bids, the following will be utilized in resolving arithmetic discrepancies found on the face of the Price Schedule as submitted by the bidder:

a. Obviously misplaced decimal points will be corrected;
b. In case of discrepancy between the unit price and the extended price, the unit price will govern;
c. Apparent errors in extensions of unit prices will be corrected;
d. Apparent errors in addition of lump sum and extended prices will be corrected.

4. For the purpose of bid evaluation, the Government will proceed on the assumption that the bidder intends the bid to be evaluated on the basis of unit prices the totals arrived at by the resolution of arithmetic discrepancies as provided above and the bid will be so reflected on the abstract of bids.

5. The lump sum "LS" line items in the Price Schedule are not "Estimated Quantity" line items and are not subject to the “Variation in Estimated Quantity” contract clause.

6. The Contract Clause 52.232-27, "Prompt Payment for Construction Contracts" requires that the name and address of the contractor official, to whom payment is to be sent, be the same as that in the contract or in a proper Notice of Assignment.

7. Principal Contracting Officer. The Contracting Officer who signs this contract will be the Principal Contracting Officer for this contract. However, any Contracting Officer assigned to the Los Angeles District, contracting within his authority, may take formal action on this contract when the Principal Contracting Officer is unavailable and the action needs to be taken.

8. Amounts and prices shall be indicated in either words or figures, NOT BOTH.

9. Payment of Electronic Funds Transfer (EFT) is the mandatory method of payment. The Contractors attention is directed to Contract Clause

52.232-33 "Mandatory Information for Electronic Funds Transfer" located in Section 00800.

10. The bidder shall distribute his indirect costs (overhead, profit, bond, etc.,) over all items in the Price Schedule. The Government will review all submitted Price Schedules for any unbalancing of the items. Any submitted Price Schedule determined to be unbalanced may be considered non-responsive and cause the bidder to be ineligible for contract award.

11. The bidder shall furnish all plant, labor, material, equipment, etc., necessary to perform all work in strict accordance with the terms and conditions set forth in the contract in include all attachments thereto.

12. Some quantities are ESTIMATED, the bidders prices MUST BE FIRM.

13. Bidder is cautioned to check his Price Schedule carefully prior to submission. If the Price Schedule contains unit prices, they should be round off to the second decimal point only NOT EXTENDED FUTHER.

14. At the formal bid opening for this solicitation, all hand carried bids submitted prior to 12:45 p.m. on the bid opening date will be accepted in Room 980 by available personnel. For the time period 12:30p.m. to 1:00 p.m., bids must be submitted to Room 980, to the bid-opening officer only. Bids will not be accepted by any other personnel or at any other location. No bid will be accepted after 1:00 p.m. The official bid opening time will be called by the Bid Opening Officer.

15. Contractor is required to fill in Cage code (Reference Section 00600, entitled "Required Central Contractor Registration" Mar 1998) and DUNS Number (Reference Section 00600, entitled, "Data Universal Numbering System (DUNS) Number" Jun 1999) in Block No. 15 on Standard Form 1442, Name and Address Block (Cage Code under Code and DUNS No. under Facility Code respectively).

16. Bidders are to submit prices on all line items in the Base Bid (0001 through 0101). In addition, bidders must submit prices on Alternative 1 (102 through 103) or Alternative 2 (104 through 107) **NOT BOTH**. The Government contemplates award of one contract to the responsive, responsible bidder who submits the lowest bid for the Base Bid and Alternative 1; or the lowest bid for the Base Bid and Alternative 2. Any bidder who submits a bid for both Alternative 1 and Alternative 2 will be deemed non-responsive and their bid will be rejected.

17. EXERCISE OF OPTIONS. The Government reserves the right to exercise the option(s) by written notice to the Contractor either singularly or in any combination for up to 60 calendar days after award of the Base Bid without an increase in the Offeror's bid price. Completion of added options shall continue at the same schedule as the Base Bid unless otherwise noted in the SPECIAL CONTRACT REQUIREMENTS, Paragraph 1, COMMENCEMENT, PROSECUTION AND COMPLETION OF WORK.

18. EVALUATION OF OPTIONS: (FAR 52.217-5) (JUL 1990)

Except when it is determined in accordance with FAR 17.206(b) not to be in the Government's best interests, the Government will evaluate offers for award purposes by adding the total price for all options to the total price for the basic requirements. Evaluation of options will not obligate the Government to exercise the options.

19. PROGRESS PAYMENT REQUESTS made by the Contractor pursuant to the provisions of Contract Clause, PAYMENTS UNDER FIXED-PRICE CONSTRUCTION CONTRACTS, shall be submitted on ENG FORM 93 to the billing office as designated on Block 26, Standard Form 1442, Solicitation, Offer and Award, back. ENG FORM 93 shall be submitted to that office on the 1st of each month in appropriate form and certified. Photocopies of the form shall be furnished on that same date to the Corps of Engineers offices designated at the Pre-Construction Conference.

CERTIFICATE OF CORPORATE PRINCIPAL

1) IF THE OFFEROR IS A JOINT VENTURE, COMPLETE THE FOLLOWING:

_____

(Company Name) (Signature) (Title)

_____

(Company Name) (Signature) (Title)

_____

(Company Name) (Signature) (Title)

2) IF THE OFFEROR IS PARTNERSHIP, LIST FULL NAME OF ALL PARTNERS:

_____

(Company Name) (Signature) (Title)

_____

(Company Name) (Signature) (Title)

_____

(Company Name) (Signature) (Title)

3) IF THE OFFEROR IS A CORPORATION, THE FOLLOWING CERTIFICATION SHOULD BE COMPLETED:

CERTIFICATION AS TO CORPORATE PRINCIPAL

I, _____ , certify that I am the Secretary of the corporation named as principal in the

within contract; that_____, who signed the said contract on behalf of the principal, was the

of the corporation; that I know his signature and that his signature is genuine; and that said contract was duly signed, sealed and attested for in behalf of said corporation by authority of its governing body.

_____
CORPORATE PRINCIPAL

CORPORATE SEAL

_____
SECRETARY

-- End of Section --

Section 00100 - Bidding Schedule/Instructions to Bidders

52.0000-4010 INQUIRIES..... 2
52.0000-4023 SAFETY REQUIREMENTS..... 2
52.209-4502 INSTRUCTIONS FOR PREPARING PRE-AWARD SURVEY..... 2
52.211-2 AVAILABILITY OF SPECIFICATIONS LISTED IN THE DOD INDEX OF SPECIFICATIONS AND STANDARDS (DODISS) AND DESCRIPTIONS LISTED IN THE ACQUISITION MANAGEMENT SYSTEMS AND DATA REQUIREMENTS CONTROL LIST, DOD 5010.12-L (DEC 1999)..... 3
52.214-3 AMENDMENTS TO INVITATIONS FOR BIDS (DEC 1989)..... 3
52.214-4 FALSE STATEMENTS IN BIDS (APR 1984)..... 3
52.214-5 SUBMISSION OF BIDS (MAR 1997)..... 4
52.214-6 EXPLANATION TO PROSPECTIVE BIDDERS (APR 1984)..... 4
52.214-7 LATE SUBMISSIONS, MODIFICATIONS, AND WITHDRAWALS OF BIDS (NOV 1999)..... 4
52.214-18 PREPARATION OF BIDS--CONSTRUCTION (APR 1984)..... 5
52.214-19 CONTRACT AWARD--SEALED BIDDING--CONSTRUCTION (AUG 1996)... 6
52.214-34 SUBMISSION OF OFFERS IN THE ENGLISH LANGUAGE (APR 1991)... 6
52.214-35 SUBMISSION OF OFFERS IN U.S. CURRENCY (APR 1991)..... 6
52.0214-4583 TELEGRAPHIC BIDS/OFFERS ARE NOT ACCEPTABLE..... 7
52.0214-4599 EVALUATION FOR AWARD..... 7
52.214-5000 APPARENT CLERICAL MISTAKES (MAR 1995)—EFARS..... 7
52.0214-5001 DIRECTIONS FOR SUBMITING BIDS (APR 2002)..... 7
52.216-1 TYPE OF CONTRACT (APR 1984)..... 10
52.219-8 UTILIZATION OF SMALL BUSINESS CONCERNS (OCT 2000)..... 10
52.228-1 BID GUARANTEE (SEP 1996)..... 11
52.228-4506 INDIVIDUAL SURETIES IN SUPPORT OF BID BONDS..... 12
52.228-4507 BID GUARANTEE FORM AND AMOUNT..... 12
52.232-38 SUBMISSION OF ELECTRONIC FUNDS TRANSFER INFORMATION WITH OFFER (MAY 1999)..... 13
52.233-2 SERVICE OF PROTEST (AUG 1996)..... 13
52.236-27 SITE VISIT (CONSTRUCTION) (FEB 1995)..... 13
52.236-28 PREPARATION OF PROPOSALS--CONSTRUCTION (OCT 1997)..... 14

Section 00100
Bidding Schedule/Instructions to Bidders

CLAUSES INCORPORATED BY FULL TEXT

52.0000-4010 INQUIRIES

Perspective bidders/offerors should submit inquiries related to this solicitation by writing or calling the following (collect calls will not be accepted:

(1) For inquiries of a contractual nature (solicitation requirements, interpretation of contractual language) call:

Sandy Oquita
213 452-3249

For bid results only, call (213) 452-3235.

(2) All technical questions on the specification or drawings will be submitted in writing to:

Address:

Jatin Desai 213 452-3721
911 Wilshire Blvd.
Los Angeles, CA 90017

(3) Please include the solicitation number, project title and location of project with your questions. Written inquiries must be received by this office not later than 7 calendar days prior to bid opening date/date set for receipt of offers.

(4) Oral explanations or instructions are not binding. Any information given to a bidder/offeror which impacts the bid/offer will be given in the form of a written amendment to the solicitation.

52.0000-4023 SAFETY REQUIREMENTS

The bidder's attention is directed to the latest version of U.S. Army Corps of Engineers Safety and Health Manual, EM 385-1-1, which will be strictly enforced. This publication may be obtained from the US Army Engineer District, Los Angeles, ATTN: Safety Office, P.O. Box 532711, Los Angeles, California 90053-2325.

52.209-4502 INSTRUCTIONS FOR PREPARING PRE-AWARD SURVEY

In accordance with Section 100 Determination of responsibility of the offer by the Contracting Officer, please provide the following information in order to perform a pre-award survey on your firm:

1. List of projects completed for the past three years, including dollar value of each correct.

2. List of projects in progress, percentage of work completed, including dollar value of each contract.

3. The name and qualifications of the employee designated to act as the Project Superintendent/Manager for this contract.

4. Copy of latest financial statement.

5. General description of your firm

Please include this information in a separate envelope marked Pre-Award Survey with the Cost and Technical Proposals.

52.211-2 AVAILABILITY OF SPECIFICATIONS LISTED IN THE DOD INDEX OF SPECIFICATIONS AND STANDARDS (DODISS) AND DESCRIPTIONS LISTED IN THE ACQUISITION MANAGEMENT SYSTEMS AND DATA REQUIREMENTS CONTROL LIST, DOD 5010.12-L (DEC 1999)

Copies of specifications, standards, and data item descriptions cited in this solicitation may be obtained--

(a) From the ASSIST database via the Internet at ttp://assist.daps.mil; or

(b) By submitting a request to the--Department of Defense Single Stock Point (DoDSSP), Building 4, Section D, 700 Robbins Avenue, Philadelphia, PA 19111-5094, Telephone (215) 697-2667/2179, Facsimile (215) 697-1462.

(End of provision)

52.214-3 AMENDMENTS TO INVITATIONS FOR BIDS (DEC 1989)

(a) If this solicitation is amended, then all terms and conditions which are not modified remain unchanged.

(b) Bidders shall acknowledge receipt of any amendment to this solicitation (1) by signing and returning the amendment, (2) by identifying the amendment number and date in the space provided for this purpose on the form for submitting a bid, (3) by letter or telegram, or (4) by facsimile, if facsimile bids are authorized in the solicitation. The Government must receive the acknowledgment by the time and at the place specified for receipt of bids.

(End of provision)

52.214-4 FALSE STATEMENTS IN BIDS (APR 1984)

Bidders must provide full, accurate, and complete information as required by this solicitation and its attachments. The penalty for making false statements in bids is prescribed in 18 U.S.C. 1001.

(End of provision)

52.214-5 SUBMISSION OF BIDS (MAR 1997)

(a) Bids and bid modifications shall be submitted in sealed envelopes or packages (unless submitted by electronic means) (1) addressed to the office specified in the solicitation, and (2) showing the time and date specified for receipt, the solicitation number, and the name and address of the bidder.

(b) Bidders using commercial carrier services shall ensure that the bid is addressed and marked on the outermost envelope or wrapper as prescribed in subparagraphs (a)(1) and (2) of this provision when delivered to the office specified in the solicitation.

(c) Telegraphic bids will not be considered unless authorized by the solicitation; however, bids may be modified or withdrawn by written or telegraphic notice.

(d) Facsimile bids, modifications, or withdrawals, will not be considered unless authorized by the solicitation.

(e) Bids submitted by electronic commerce shall be considered only if the electronic commerce method was specifically stipulated or permitted by the solicitation.

(End of provision)

52.214-6 EXPLANATION TO PROSPECTIVE BIDDERS (APR 1984)

Any prospective bidder desiring an explanation or interpretation of the solicitation, drawings, specifications, etc., must request it in writing soon enough to allow a reply to reach all prospective bidders before the submission of their bids. Oral explanations or instructions given before the award of a contract will not be binding. Any information given a prospective bidder concerning a solicitation will be furnished promptly to all other prospective bidders as an amendment to the solicitation, if that information is necessary in submitting bids or if the lack of it would be prejudicial to other prospective bidders.

(End of provision)

52.214-7 LATE SUBMISSIONS, MODIFICATIONS, AND WITHDRAWALS OF BIDS (NOV 1999)

(a) Bidders are responsible for submitting bids, and any modifications or withdrawals, so as to reach the Government office designated in the invitation for bids (IFB) by the time specified in the IFB. If no time is specified in the IFB, the time for receipt is 4:30 p.m., local time, for the designated Government office on the date that bids are due.

(b)(1) Any bid, modification, or withdrawal received at the Government office designated in the IFB after the exact time specified for receipt of bids is “late” and will not be considered unless it is received before award is made, the Contracting Officer determines that accepting the late bid would not unduly delay the acquisition; and--

(i) If it was transmitted through an electronic commerce method authorized by the IFB, it was received at the initial point of entry to the Government infrastructure not later than 5:00 p.m. one working day prior to the date specified for receipt of bids; or

(ii) There is acceptable evidence to establish that it was received at the Government installation designated for receipt of bids and was under the Government's control prior to the time set for receipt of bids.

(2) However, a late modification of an otherwise successful bid that makes its terms more favorable to the Government, will be considered at any time it is received and may be accepted.

(c) Acceptable evidence to establish the time of receipt at the Government installation includes the time/date stamp of that installation on the bid wrapper, other documentary evidence of receipt maintained by the installation, or oral testimony or statements of Government personnel.

(d) If an emergency or unanticipated event interrupts normal Government processes so that bids cannot be received at the Government office designated for receipt of bids by the exact time specified in the IFB and urgent Government requirements preclude amendment of the IFB, the time specified for receipt of bids will be deemed to be extended to the same time of day specified in the solicitation on the first work day on which normal Government processes resume.

(e) Bids may be withdrawn by written notice received at any time before the exact time set for receipt of bids. If the IFB authorizes facsimile bids, bids may be withdrawn via facsimile received at any time before the exact time set for receipt of bids, subject to the conditions specified in the provision at 52.214-31, Facsimile Bids. A bid may be withdrawn in person by a bidder or its authorized representative if, before the exact time set for receipt of bids, the identity of the person requesting withdrawal is established and the person signs a receipt for the bid.

(End of provision)

52.214-18 PREPARATION OF BIDS--CONSTRUCTION (APR 1984)

(a) Bids must be (1) submitted on the forms furnished by the Government or on copies of those forms, and (2) manually signed. The person signing a bid must initial each erasure or change appearing on any bid form.

(b) The bid form may require bidders to submit bid prices for one or more items on various bases, including--

(1) Lump sum bidding;

(2) Alternate prices;

(3) Units of construction; or

(4) Any combination of subparagraphs (1) through (3) above.

(c) If the solicitation requires bidding on all items, failure to do so will disqualify the bid. If bidding on all items is not required, bidders should insert the words "no bid" in the space provided for any item on which no price is submitted.

(d) Alternate bids will not be considered unless this solicitation authorizes their submission.

(End of provision)

52.214-19 CONTRACT AWARD--SEALED BIDDING--CONSTRUCTION (AUG 1996)

(a) The Government will evaluate bids in response to this solicitation without discussions and will award a contract to the responsible bidder whose bid, conforming to the solicitation, will be most advantageous to the Government, considering only price and the price-related factors specified elsewhere in the solicitation.

(b) The Government may reject any or all bids, and waive informalities or minor irregularities in bids received.

(c) The Government may accept any item or combination of items, unless doing so is precluded by a restrictive limitation in the solicitation or the bid.

(d) The Government may reject a bid as nonresponsive if the prices bid are materially unbalanced between line items or subline items. A bid is materially unbalanced when it is based on prices significantly less than cost for some work and prices which are significantly overstated in relation to cost for other work, and if there is a reasonable doubt that the bid will result in the lowest overall cost to the Government even though it may be the low evaluated bid, or if it is so unbalanced as to be tantamount to allowing an advance payment.

(End of provision)

52.214-34 SUBMISSION OF OFFERS IN THE ENGLISH LANGUAGE (APR 1991)

Offers submitted in response to this solicitation shall be in the English language. Offers received in other than English shall be rejected.

(End of provision)

52.214-35 SUBMISSION OF OFFERS IN U.S. CURRENCY (APR 1991)

Offers submitted in response to this solicitation shall be in terms of U.S. dollars. Offers received in other than U.S. dollars shall be rejected.

(End of provision)

52.0214-4583 TELEGRAPHIC BIDS/OFFERS ARE NOT ACCEPTABLE

Any telegram to modify or withdraw a bid/offer sent to this office must be physically delivered to the office designated for receipt of bid/offer by the date and time set for bid opening/receipt of proposals.

No one from this office will be dispatched to the local telegraph office to pick up any telegram for any reason.

52.0214-4599 EVALUATION FOR AWARD

The Government contemplates award of one contract to the responsive, responsible bidder who submits the low bid for the total of all the items in the Bidding Schedule.

52.214-5000 APPARENT CLERICAL MISTAKES (MAR 1995)—EFARS

(a) For the purpose of initial evaluations of bids, the following will be utilized in the resolving arithmetic discrepancies found on the face of bidding schedule as submitted by the bidder:

(1) Obviously misplaced decimal points will be corrected;

(2) Discrepancy between unit price and extended price, the unit price will govern;

(3) Apparent errors in extension of unit prices will be corrected;

(4) Apparent errors in addition of lump-sum and extended prices will be corrected.

(b) For the purpose of bid evaluation, the government will proceed on the assumption that the bidder intends his bid to be evaluated on basis of the unit prices, the totals arrived at by resolution of arithmetic discrepancies as provided above and the bid will be so reflected on the abstract of bids.

(c) These correction procedures shall not be used to resolve any ambiguity concerning which bid is low.
(End of statement)

52.0214-5001 DIRECTIONS FOR SUBMITING BIDS (APR 2002)

Envelopes containing bids must be sealed, marked and addressed as follows:

MARK ENVELOPES:

Bid under IFB No. DACW09-03-B-0004
Bid Opening Date: May 20, 2003 at 1:00 p.m.

ADDRESS ENVELOPES TO:

Department of the Army
U. S. Army Engineer District, Los Angeles
ATTN: Contracting Division
C/O: Sandy Oquita
P. O. Box 532711
Los Angeles, CA 90053-2325

SPECIAL INSTRUCTIONS PERTAINING TO HAND-CARRIED BIDS:

Due to security precautions, all Corps of Engineers visitors/couriers are now required to check in at the Public Affairs Office (PAO), Suite 980, Wilshire Blvd, Los Angeles, CA. Bidders are no longer permitted to hand-carry their bids directly to Contacting Division without an authorized escort. Bids may NOT be left unattended at the Public Affairs Office (PAO), Suite 980.

Bidders who desire to hand-deliver their bids prior to the scheduled bid opening time/date must notify the Contracting Division to arrange for receipt of their bid by Contracting Division personnel. Normally the contact will be the Contract Specialist designated above. In the event the Contract Specialist cannot be reached, please call the main Contracting Division telephone number, 213-452-3231 or the following alternative telephone numbers -3233, -3245, -3234, or -3235, in order to request assistance.

30 minutes prior to the scheduled bid opening time/date, the Bid Opening Officer will be in the Public Affairs Office (PAO) Suite 980, to accept bids. After visitor in-processing, all bidders will subsequently be escorted to Bid Opening Room, where the bids will be publicly opened and read.

In order to expedite visitor processing, bidders are encouraged to complete the information requested on the Notice of Visitor(s) Form (attached). The completed form can be faxed to the Contract Specialist at (213)452-4184 or 4187, prior to the date for receipt of bids. In addition, no more than 2 visitors per firm will be permitted within the building. No exceptions will be made. The offeror is responsible for compliance with the security requirements and shall ensure that any company representative, courier or delivery personnel are aware of these special procedures pertaining to hand carried bids.

NOTICE OF VISITOR(S)		
1. Date(s) of Visit *(Inclusive)*	2. Arrival Time	
3. Name of Visitor(s) *(Last, First)*	4. Agency/Company of Visitor	
5. Name of Person Being Visited *(Include Div, Br, Sec)*	6. Suite Number	7. Telephone Number
8. Contact Person *(if other than Person Being Visited)*		9. Telephone Number
10. Other Comments or Instructions		

- All visitors must report to the Public Affairs Office, Suite 980
- Visitors must use the Visitor Tag provided.
- Visitors must be escorted to Corps of Engineers floors
- Parking validation is only available for Engineering Division, Construction-Operations, and Information Management field personnel.
- Delivery personnel will be validated for 30 minutes only.

52.216-1 TYPE OF CONTRACT (APR 1984)

The Government contemplates award of a Firm Fixed Price Construction contract resulting from this solicitation.

(End of clause)

52.219-8 UTILIZATION OF SMALL BUSINESS CONCERNS (OCT 2000)

(a) It is the policy of the United States that small business concerns, veteran-owned small business concerns, service-disabled veteran-owned small business concerns, HUBZone small business concerns, small disadvantaged business concerns, and women-owned small business concerns shall have the maximum practicable opportunity to participate in performing contracts let by any Federal agency, including contracts and subcontracts for subsystems, assemblies, components, and related services for major systems. It is further the policy of the United States that its prime contractors establish procedures to ensure the timely payment of amounts due pursuant to the terms of their subcontracts with small business concerns, veteran-owned small business concerns, service-disabled veteran-owned small business concerns, HUBZone small business concerns, small disadvantaged business concerns, and women-owned small business concerns.

(b) The Contractor hereby agrees to carry out this policy in the awarding of subcontracts to the fullest extent consistent with efficient contract performance. The Contractor further agrees to cooperate in any studies or surveys as may be conducted by the United States Small Business Administration or the awarding agency of the United States as may be necessary to determine the extent of the Contractor's compliance with this clause.

Definitions. As used in this contract--

HUBZone small business concern means a small business concern that appears on the List of Qualified HUBZone Small Business Concerns maintained by the Small Business Administration.

Service-disabled veteran-owned small business concern--

(1) Means a small business concern--

(i) Not less than 51 percent of which is owned by one or more service-disabled veterans or, in the case of any publicly owned business, not less than 51 percent of the stock of which is owned by one or more service-disabled veterans; and

(ii) The management and daily business operations of which are controlled by one or more service-disabled veterans or, in the case of a veteran with permanent and severe disability, the spouse or permanent caregiver of such veteran.

(2) Service-disabled veteran means a veteran, as defined in 38 U.S.C. 101(2), with a disability that is service-connected, as defined in 38 U.S.C. 101(16).

Small business concern means a small business as defined pursuant to Section 3 of the Small Business Act and relevant regulations promulgated pursuant thereto.

Small disadvantaged business concern means a small business concern that represents, as part of its offer that--

(1) It has received certification as a small disadvantaged business concern consistent with 13 CFR part 124, subpart B;

(2) No material change in disadvantaged ownership and control has occurred since its certification;

(3) Where the concern is owned by one or more individuals, the net worth of each individual upon whom the certification is based does not exceed $750,000 after taking into account the applicable exclusions set forth at 13 CFR 124.104(c)(2); and

(4) It is identified, on the date of its representation, as a certified small disadvantaged business in the database maintained by the Small Business Administration (PRO-Net).

Veteran-owned small business concern means a small business concern--

(1) Not less than 51 percent of which is owned by one or more veterans (as defined at 38 U.S.C. 101(2)) or, in the case of any publicly owned business, not less than 51 percent of the stock of which is owned by one or more veterans; and

(2) The management and daily business operations of which are controlled by one or more veterans.

Women-owned small business concern means a small business concern--

(1) That is at least 51 percent owned by one or more women, or, in the case of any publicly owned business, at least 51 percent of the stock of which is owned by one or more women; and

(2) Whose management and daily business operations are controlled by one or more women.

(d) Contractors acting in good faith may rely on written representations by their subcontractors regarding their status as a small business concern, a veteran-owned small business concern, a service-disabled veteran-owned small business concern, a HUBZone small business concern, a small disadvantaged business concern, or a women-owned small business concern.

(End of clause)

52.228-1 BID GUARANTEE (SEP 1996)

(a) Failure to furnish a bid guarantee in the proper form and amount, by the time set for opening of bids, may be cause for rejection of the bid.

(b) The bidder shall furnish a bid guarantee in the form of a firm commitment, e.g., bid bond supported by good and sufficient surety or sureties acceptable to the Government, postal money order, certified check, cashier's check, irrevocable letter of credit, or, under Treasury Department regulations, certain bonds or notes of the United States. The Contracting Officer will return bid guarantees, other than bid bonds, (1) to unsuccessful bidders as soon as practicable after the opening of bids, and (2) to the successful bidder upon execution of contractual documents and bonds (including any necessary coinsurance or reinsurance agreements), as required by the bid as accepted.-

(c) The amount of the bid guarantee shall be 20% percent of the bid price or $3,000,000.00, whichever is less.

(d) If the successful bidder, upon acceptance of its bid by the Government within the period specified for acceptance, fails to execute all contractual documents or furnish executed bond(s) within 10 days after receipt of the forms by the bidder, the Contracting Officer may terminate the contract for default.-

(e) In the event the contract is terminated for default, the bidder is liable for any cost of acquiring the work that exceeds the amount of its bid, and the bid guarantee is available to offset the difference.

(End of clause)

52.228-4506 INDIVIDUAL SURETIES IN SUPPORT OF BID BONDS

Bidder/offerors utilizing individual sureties in support of a bid bond shall include a Standard Form (SF) 28 (Affidavit of Individual Surety), accompanied by a pledge of acceptable assets from each person acting as an individual surety, and include these with the SF 24 (Bid Bond), and the bid itself (see clause titled "Pledges of Assets," FAR 52.228-11). Pledges of acceptable assets shall be in the form of (1) evidence of an escrow account and/or (2) a recorded lien on real estate. If this is an RFP, failure to provide required documentation described herein may cause the offeror to be deemed "unacceptable".

52.228-4507 BID GUARANTEE FORM AND AMOUNT

When bids/proposals exceed $100,000, the offeror shall furnish a separated bid guarantee in accordance with the solicitation provision titled "Bid Guarantee", FAR 52.228-1. In accordance with FAR 28.101-2 the bid guarantee amount shall be a least 20% percent of the "bid price" but shall not exceed $3 million. When the penal sum is expressed as a percentage, a maximum dollar limitation may be stated. If there are option line items on the Pricing Schedule (Schedule B), the term "bid price" is hereby defined as the total bid not to include any amount for line items designated as "options". In bids/proposals that contain" additives", the "bid price" is defined as the total of all bid items including additive line items. FAR 28.106-1 states that a Standard Form (SF) 24 shall be used for the bid bond. In accordance with FAR 28.202(a)(1), corporate sureties utilized must appear on the list contained in the Department of Treasury Circular 570 titled "Companies Holding Certificates of Authority as Acceptable Sureties on Federal Bonds and Acceptable Reinsuring Companies."

52.232-38 SUBMISSION OF ELECTRONIC FUNDS TRANSFER INFORMATION WITH OFFER (MAY 1999)

The offeror shall provide, with its offer, the following information that is required to make payment by electronic funds transfer (EFT) under any contract that results from this solicitation. This submission satisfies the requirement to provide EFT information under paragraphs (b)(1) and (j) of the clause at 52.232-34, Payment by Electronic Funds Transfer--Other than Central Contractor Registration.

(1) The solicitation number (or other procurement identification number).

(2) The offeror's name and remittance address, as stated in the offer.

(3) The signature (manual or electronic, as appropriate), title, and telephone number of the offeror's official authorized to provide this information.

(4) The name, address, and 9-digit Routing Transit Number of the offeror's financial agent.

(5) The offeror's account number and the type of account (checking, savings, or lockbox).

(6) If applicable, the Fedwire Transfer System telegraphic abbreviation of the offeror's financial agent.

(7) If applicable, the offeror shall also provide the name, address, telegraphic abbreviation, and 9-digit Routing Transit Number of the correspondent financial institution receiving the wire transfer payment if the offeror's financial agent is not directly on-line to the Fedwire and, therefore, not the receiver of the wire transfer payment.

(End of provision)

52.233-2 SERVICE OF PROTEST (AUG 1996)

(a) Protests, as defined in section 33.101 of the Federal Acquisition Regulation, that are filed directly with an agency, and copies of any protests that are filed with the General Accounting Office (GAO), shall be served on the Contracting Officer (addressed as follows) by obtaining written and dated acknowledgment of receipt from Tina A. Frazier. The copy of any protest shall be received in the office designated above within one day of filing a protest with the GAO.

(End of provision)

52.236-27 SITE VISIT (CONSTRUCTION) (FEB 1995)

(a) The clauses at 52.236-2, Differing Site Conditions, and 52.236-3, Site Investigations and Conditions Affecting the Work, will be included in any contract awarded as a result of this solicitation. Accordingly, offerors or quoters are urged and expected to inspect the site where the work will be performed.

(b) Site visit is scheduled for May 6, 2003, at 9:00 a.m., Contractors should meet at the Project Trailer, 2901 S. Central, Lot B, Phoenix, AZ 85040, Point of Contact is:

Name: Louis Uptmor
Address: 2901 S. Central, Lot B
Telephone: Phoenix, AZ 85040

(End of provision)

52.236-28 PREPARATION OF PROPOSALS--CONSTRUCTION (OCT 1997)

(a) Proposals must be (1) submitted on the forms furnished by the Government or on copies of those forms, and (2) manually signed. The person signing a proposal must initial each erasure or change appearing on any proposal form.

(b) The proposal form may require offerors to submit proposed prices for one or more items on various bases, including--

(1) Lump sum price;

(2) Alternate prices;

(3) Units of construction; or

(4) Any combination of paragraphs (b)(1) through (b)(3) of this provision.

(c) If the solicitation requires submission of a proposal on all items, failure to do so may result in the proposal being rejected without further consideration. If a proposal on all items is not required, offerors should insert the words "no proposal" in the space provided for any item on which no price is submitted.

(d) Alternate proposals will not be considered unless this solicitation authorizes their submission.

(End of provision)

-- End of Section --

Section 00600 - Representations & Certifications

CLAUSES INCORPORATED BY FULL TEXT

52.202-1 DEFINITIONS (MAY 2001) --ALTERNATE I (MAR 2001)..... 2
52.203-2 CERTIFICATE OF INDEPENDENT PRICE DETERMINATION (APR 1985).. 3
52.203-11 CERTIFICATION AND DISCLOSURE REGARDING PAYMENTS TO INFLUENCE CERTAIN FEDERAL TRANSACTIONS (APR 1991)..... 3
52.204-3 TAXPAYER IDENTIFICATION (OCT 1998)..... 4
52.204-6 DATA UNIVERSAL NUMBERING SYSTEM (DUNS) NUMBER (JUN 99)..... 6
52.209-5 CERTIFICATION REGARDING DEBARMENT, SUSPENSION, PROPOSED DEBARMENT, AND OTHER RESPONSIBILITY MATTERS (DEC 2001)..... 6
52.219-1 SMALL BUSINESS PROGRAM REPRESENTATIONS (APR 2002)..... 8
52.219-2 EQUAL LOW BIDS. (OCT 1995)..... 10
52.219-19 SMALL BUSINESS CONCERN REPRESENTATION FOR THE SMALL BUSINESS COMPETITIVENESS DEMONSTRATION PROGRAM (OCT 2000)..... 10
52.219-22 SMALL DISADVANTAGED BUSINESS STATUS (OCT 1999)..... 11
252.204-7001 COMMERCIAL AND GOVERNMENT ENTITY (CAGE) CODE REPORTING (AUG 1999)..... 12
252.204-7004 REQUIRED CENTRAL CONTRACTOR REGISTRATION (NOV 2001)... 12
252.209-7004 SUBCONTRACTING WITH FIRMS THAT ARE OWNED OR CONTROLLED BY THE GOVERNMENT OF A TERRORIST COUNTRY (MAR 1998)..... 13
252.247-7022 REPRESENTATION OF EXTENT OF TRANSPORTATION BY SEA (AUG 1992)..... 14

SECTION 00600
REPRESENTATIONS & CERTIFICATIONS

52.202-1 DEFINITIONS (MAY 2001) --ALTERNATE I (MAR 2001)

(a) Agency head or head of the agency means the Secretary (Attorney General, Administrator, Governor, Chairperson, or other chief official, as appropriate) of the agency, unless otherwise indicated, including any deputy or assistant chief official of the executive agency.

(b) Commercial component means any component that is a commercial item.

(c) Component means any item supplied to the Government as part of an end item or of another component, except that for use in 52.225-9, and 52.225-11 see the definitions in 52.225-9(a) and 52.225-11(a).

(d) Contracting Officer means a person with the authority to enter into, administer, and/or terminate contracts and make related determinations and findings. The term includes certain authorized representatives of the Contracting Officer acting within the limits of their authority as delegated by the Contracting Officer.

(e) Nondevelopmental item means--

(1) Any previously developed item of supply used exclusively for governmental purposes by a Federal agency, a State or local government, or a foreign government with which the United States has a mutual defense cooperation agreement;

(2) Any item described in paragraph (f)(1) of this definition that requires only minor modification or modifications of a type customarily available in the commercial marketplace in order to meet the requirements of the procuring department or agency; or

(3) Any item of supply being produced that does not meet the requirements of paragraph (f)(1) or (f)(2) solely because the item is not yet in use.

(f) "Contracting Officer" means a person with the authority to enter into, administer, and/or terminate contracts and make related determinations and findings. The term includes certain authorized representatives of the Contracting Officer acting within the limits of their authority as delegated by the Contracting Officer.

(g) Except as otherwise provided in this contract, the term "subcontracts" includes, but is not limited to, purchase orders and changes and modifications to purchase orders under this contract.

(End of clause)

52.203-2 CERTIFICATE OF INDEPENDENT PRICE DETERMINATION (APR 1985)

(a) The offeror certifies that --

(1) The prices in this offer have been arrived at independently, without, for the purpose of restricting competition, any consultation, communication, or agreement with any other offeror or competitor relating to (i) those prices, (ii) the intention to submit an offer, or (iii) the methods of factors used to calculate the prices offered;

(2) The prices in this offer have not been and will not be knowingly disclosed by the offeror, directly or indirectly, to any other offeror or competitor before bid opening (in the case of a sealed bid solicitation) or contract award (in the case of a negotiated solicitation) unless otherwise required by law; and

(3) No attempt has been made or will be made by the offeror to induce any other concern to submit or not to submit an offer for the purpose of restricting competition.

(b) Each signature on the offer is considered to be a certification by the signatory that the signatory --

(1) Is the person in the offeror's organization responsible for determining the prices offered in this bid or proposal, and that the signatory has not participated and will not participate in any action contrary to subparagraphs (a)(1) through (a)(3) of this provision; or

(2)(i) Has been authorized, in writing, to act as agent for the following principals in certifying that those principals have not participated, and will not participate in any action contrary to subparagraphs (a)(1) through (a)(3) of this provison _____ [insert full name of person(s) in the offeror's organization responsible for determining the prices offered in this bid or proposal, and the title of his or her position in the offeror's organization];

(ii) As an authorized agent, does certify that the principals named in subdivision (b)(2)(i) above have not participated, and will not participate, in any action contrary to subparagraphs (a)(1) through (a)(3) above; and

(iii) As an agent, has not personally participated, and will not participate, in any action contrary to subparagraphs (a)(1) through (a)(3) of this provision.

(c) If the offeror deletes or modifies subparagraph (a)(2) of this provision, the offeror must furnish with its offer a signed statement setting forth in detail the circumstances of the disclosure.

(End of clause)

52.203-11 CERTIFICATION AND DISCLOSURE REGARDING PAYMENTS TO INFLUENCE CERTAIN FEDERAL TRANSACTIONS (APR 1991)

(a) The definitions and prohibitions contained in the clause, at FAR 52.203-12, Limitation on Payments to Influence Certain Federal

Transactions, included in this solicitation, are hereby incorporated by reference in paragraph (b) of this Certification.

(b) The offeror, by signing its offer, hereby certifies to the best of his or her knowledge and belief that on or after December 23, 1989,--

(1) No Federal appropriated funds have been paid or will be paid to any person for influencing or attempting to influence an officer or employee of any agency, a Member of Congress, an officer or employee of Congress, or an employee of a Member of Congress on his or her behalf in connection with the awarding of any Federal contract, the making of any Federal grant, the making of any Federal loan, the entering into of any cooperative agreement, and the extension, continuation, renewal, amendment or modification of any Federal contract, grant, loan, or cooperative agreement;

(2) If any funds other than Federal appropriated funds (including profit or fee received under a covered Federal transaction) have been paid, or will be paid to any person for influencing or attempting to influence an officer or employee of any agency, a Member of Congress, an officer or employee of Congress or an employee of a Member of Congress on his or her behalf in connection with this solicitation, the offeror shall complete and submit, with its offer, OMB standard form LLL, Disclosure of Lobbying Activities, to the Contracting Officer; and

(3) He or she will include the language of this certification in all subcontract awards at any tier and require that all recipients of subcontract awards in excess of $100,000 shall certify and disclose accordingly.

(c) Submission of this certification and disclosure is a prerequisite for making or entering into this contract imposed by section 1352, title 31, United States Code. Any person who makes an expenditure prohibited under this provision, shall be subject to a civil penalty of not less than $10,000, and not more than $100,000, for each such failure.

(End of provision)

52.204-3 TAXPAYER IDENTIFICATION (OCT 1998)

(a) Definitions.

"Common parent," as used in this provision, means that corporate entity that owns or controls an affiliated group of corporations that files its Federal income tax returns on a consolidated basis, and of which the offeror is a member.

"Taxpayer Identification Number (TIN)," as used in this provision, means the number required by the Internal Revenue Service (IRS) to be used by the offeror in reporting income tax and other returns. The TIN may be either a Social Security Number or an Employer Identification Number.

(b) All offerors must submit the information required in paragraphs (d) through (f) of this provision to comply with debt collection requirements of 31 U.S.C. 7701(c) and 3325(d), reporting requirements of 26 U.S.C. 6041, 6041A, and 6050M, and implementing regulations

issued by the IRS. If the resulting contract is subject to the payment reporting requirements described in Federal Acquisition Regulation (FAR) 4.904, the failure or refusal by the offeror to furnish the information may result in a 31 percent reduction of payments otherwise due under the contract.

(c) The TIN may be used by the Government to collect and report on any delinquent amounts arising out of the offeror's relationship with the Government (31 U.S.C. 7701(c)(3)). If the resulting contract is subject to the payment reporting requirements described in FAR 4.904, the TIN provided hereunder may be matched with IRS records to verify the accuracy of the offeror's TIN.

(d) Taxpayer Identification Number (TIN).

___ TIN:._____

___ TIN has been applied for.

___ TIN is not required because:

___ Offeror is a nonresident alien, foreign corporation, or foreign partnership that does not have income effectively connected with the conduct of a trade or business in the United States and does not have an office or place of business or a fiscal paying agent in the United States;

___ Offeror is an agency or instrumentality of a foreign government;

___ Offeror is an agency or instrumentality of the Federal Government.

(e) Type of organization.

___ Sole proprietorship;

___ Partnership;

___ Corporate entity (not tax-exempt);

___ Corporate entity (tax-exempt);

___ Government entity (Federal, State, or local);

___ Foreign government;

___ International organization per 26 CFR 1.6049-4;

___ Other _____

(f) Common parent.

___ Offeror is not owned or controlled by a common parent as defined in paragraph (a) of this provision.

___ Name and TIN of common parent:

Name _____

TIN _____

(End of provision)

52.204-6 DATA UNIVERSAL NUMBERING SYSTEM (DUNS) NUMBER (JUN 99)

(a) The offeror shall enter, in the block with its name and address on the cover page of its offer, the annotation "DUNS" followed by the DUNS number that identifies the offeror’s name and address exactly as stated in the offer.

(b) If the offeror does not have a DUNS number, it should contact Dun and Bradstreet directly to obtain one. A DUNS number will be provided immediately by telephone at no charge to the offeror. For information on obtaining a DUNS number, the offeror, if located within the United States, should call Dun and Bradstreet at 1-800-333-0505. The offeror should be prepared to provide the following information:

(1) Company name.

(2) Company address.

(3) Company telephone number.

(4) Line of business.

(5) Chief executive officer/key manager.

(6) Date the company was started.

(7) Number of people employed by the company.

(8) Company affiliation.

(c) Offerors located outside the United States may obtain the location and phone number of the local Dun and Bradstreet Information Services office from the Internet Home Page at http://www.customerservice@dnb.com. If an offeror is unable to locate a local service center, it may send an e-mail to Dun and Bradstreet at globalinfo@mail.dnb.com.

(End of provision)

52.209-5 CERTIFICATION REGARDING DEBARMENT, SUSPENSION, PROPOSED DEBARMENT, AND OTHER RESPONSIBILITY MATTERS (DEC 2001)

(a)(1) The Offeror certifies, to the best of its knowledge and belief, that--

(i) The Offeror and/or any of its Principals--

(A) Are ( ) are not ( ) presently debarred, suspended, proposed for debarment, or declared ineligible for the award of contracts by any Federal agency;

(B) Have ( ) have not ( ), within a three-year period preceding this offer, been convicted of or had a civil judgment rendered against them for: commission of fraud or a criminal offense in connection with obtaining, attempting to obtain, or performing a public (Federal, state, or local) contract or subcontract; violation of Federal or state antitrust statutes relating to the submission of offers; or commission of embezzlement, theft, forgery, bribery, falsification or destruction of records, making false statements, tax evasion, or receiving stolen property; and

(C) Are ( ) are not ( ) presently indicted for, or otherwise criminally or civilly charged by a governmental entity with, commission of any of the offenses enumerated in subdivision (a)(1)(i)(B) of this provision.

(ii) The Offeror has ( ) has not ( ), within a three-year period preceding this offer, had one or more contracts terminated for default by any Federal agency.

(2) "Principals," for the purposes of this certification, means officers; directors; owners; partners; and, persons having primary management or supervisory responsibilities within a business entity (e.g., general manager; plant manager; head of a subsidiary, division, or business segment, and similar positions).

THIS CERTIFICATION CONCERNS A MATTER WITHIN THE JURISDICTION OF AN AGENCY OF THE UNITED STATES AND THE MAKING OF A FALSE, FICTITIOUS, OR FRAUDULENT CERTIFICATION MAY RENDER THE MAKER SUBJECT TO PROSECUTION UNDER SECTION 1001, TITLE 18, UNITED STATES CODE.

(b) The Offeror shall provide immediate written notice to the Contracting Officer if, at any time prior to contract award, the Offeror learns that its certification was erroneous when submitted or has become erroneous by reason of changed circumstances.

(c) A certification that any of the items in paragraph (a) of this provision exists will not necessarily result in withholding of an award under this solicitation. However, the certification will be considered in connection with a determination of the Offeror's responsibility. Failure of the Offeror to furnish a certification or provide such additional information as requested by the Contracting Officer may render the Offeror nonresponsible.

(d) Nothing contained in the foregoing shall be construed to require establishment of a system of records in order to render, in good faith, the certification required by paragraph (a) of this provision. The knowledge and information of an Offeror is not required to exceed that which is normally possessed by a prudent person in the ordinary course of business dealings.

(e) The certification in paragraph (a) of this provision is a material representation of fact upon which reliance was placed when making award. If it is later determined that the Offeror knowingly rendered an erroneous certification, in addition to other remedies available to the Government, the Contracting Officer may terminate the contract resulting from this solicitation for default.

(End of provision)

52.219-1 SMALL BUSINESS PROGRAM REPRESENTATIONS (APR 2002)

(a)(1) The North American Industry Classification System (NAICS) code for this acquisition is 237990

(2) The small business size standard is 28.5

(3) The small business size standard for a concern which submits an offer in its own name, other than on a construction or service contract, but which proposes to furnish a product which it did not itself manufacture, is 500 employees.

(b) Representations. (1) The offeror represents as part of its offer that it ( ) is, ( ) is not a small business concern.

(2) (Complete only if the offeror represented itself as a small business concern in paragraph (b)(1) of this provision.) The offeror represents, for general statistical purposes, that it ( ) is, ( ) is not a small disadvantaged business concern as defined in 13 CFR 124.1002.

(3) (Complete only if the offeror represented itself as a small business concern in paragraph (b)(1) of this provision.) The offeror represents as part of its offer that it ( ) is, ( ) is not a women-owned small business concern.

(4) (Complete only if the offeror represented itself as a small business concern in paragraph (b)(1) of this provision.) The offeror represents as part of its offer that it ( ) is, ( ) is not a veteran-owned small business concern.

(5) (Complete only if the offeror represented itself as a veteran-owned small business concern in paragraph (b)(4) of this provision.) The offeror represents as part of its offer that it ( ) is, ( ) is not a service-disabled veteran-owned small business concern.

(6) (Complete only if the offeror represented itself as a small business concern in paragraph (b)(1) of this provision.) The offeror represents, as part of its offer, that--

(i) It ( ) is, ( ) is not a HUBZone small business concern listed, on the date of this representation, on the List of Qualified HUBZone Small Business Concerns maintained by the Small Business Administration, and no material change in ownership and control, principal office, or HUBZone employee percentage has occurred since it was certified by the Small Business Administration in accordance with 13 CFR part 126; and

(ii) It ( ) is, ( ) is not a joint venture that complies with the requirements of 13 CFR part 126, and the representation in paragraph (b)(6)(i) of this provision is accurate for the HUBZone small business concern or concerns that are participating in the joint venture. (The offeror shall enter the name or names of the HUBZone small business concern or concerns that are participating in the joint venture:_____.) Each HUBZone small business concern

participating in the joint venture shall submit a separate signed copy of the HUBZone representation.

(c) Definitions. As used in this provision--

Service-disabled veteran-owned small business concern--

(1) Means a small business concern--

(i) Not less than 51 percent of which is owned by one or more service-disabled veterans or, in the case of any publicly owned business, not less than 51 percent of the stock of which is owned by one or more service-disabled veterans; and

(ii) The management and daily business operations of which are controlled by one or more service-disabled veterans or, in the case of a veteran with permanent and severe disability, the spouse or permanent caregiver of such veteran.

(2) Service-disabled veteran means a veteran, as defined in 38 U.S.C. 101(2), with a disability that is service-connected, as defined in 38 U.S.C. 101(16).

"Small business concern," means a concern, including its affiliates, that is independently owned and operated, not dominant in the field of operation in which it is bidding on Government contracts, and qualified as a small business under the criteria in 13 CFR Part 121 and the size standard in paragraph (a) of this provision.

Veteran-owned small business concern means a small business concern--

(1) Not less than 51 percent of which is owned by one or more veterans (as defined at 38 U.S.C. 101(2)) or, in the case of any publicly owned business, not less than 51 percent of the stock of which is owned by one or more veterans; and

(2) The management and daily business operations of which are controlled by one or more veterans.

"Women-owned small business concern," means a small business concern --

(1) That is at least 51 percent owned by one or more women; in the case of any publicly owned business, at least 51 percent of the stock of which is owned by one or more women; and

(2) Whose management and daily business operations are controlled by one or more women.

(d) Notice.

(1) If this solicitation is for supplies and has been set aside, in whole or in part, for small business concerns, then the clause in this solicitation providing notice of the set-aside contains restrictions on the source of the end items to be furnished.

(2) Under 15 U.S.C. 645(d), any person who misrepresents a firm's status as a small, HUBZone small, small disadvantaged, or women-owned

small business concern in order to obtain a contract to be awarded under the preference programs established pursuant to section 8(a), 8(d), 9, or 15 of the Small Business Act or any other provision of Federal law that specifically references section 8(d) for a definition of program eligibility, shall--

(i) Be punished by imposition of fine, imprisonment, or both;

(ii) Be subject to administrative remedies, including suspension and debarment; and

(iii) Be ineligible for participation in programs conducted under the authority of the Act.

(End of provision)

52.219-2 EQUAL LOW BIDS. (OCT 1995)

(a) This provision applies to small business concerns only.

(b) The bidder's status as a labor surplus area (LSA) concern may affect entitlement to award in case of tie bids. If the bidder wishes to be considered for this priority, the bidder must identify, in the following space, the LSA in which the costs to be incurred on account of manufacturing or production (by the bidder or the first-tier subcontractors) amount to more than 50 percent of the contract price.

_____

_____

_____

(c) Failure to identify the labor surplus area as specified in paragraph (b) of this provision will preclude the bidder from receiving priority consideration. If the bidder is awarded a contract as a result of receiving priority consideration under this provision and would not have otherwise received award, the bidder shall perform the contract or cause the contract to be performed in accordance with the obligations of an LSA concern.

52.219-19 SMALL BUSINESS CONCERN REPRESENTATION FOR THE SMALL BUSINESS COMPETITIVENESS DEMONSTRATION PROGRAM (OCT 2000)

(a) Definition.

"Emerging small business" as used in this solicitation, means a small business concern whose size is no greater than 50 percent of the numerical size standard applicable to the North American Industry Classification System (NAICS) code assigned to a contracting opportunity.

(b) [Complete only if the Offeror has represented itself under the provision at 52.219-1 as a small business concern under the size standards of this solicitation.] The Offeror [ ] is, [ ] is not an emerging small business.

(c) (Complete only if the Offeror is a small business or an emerging small business, indicating its size range.)

Offeror's number of employees for the past 12 months (check this column if size standard stated in solicitation is expressed in terms of number of employees) or Offeror's average annual gross revenue for the last 3 fiscal years (check this column if size standard stated in solicitation is expressed in terms of annual receipts). (Check one of the following.)

No. of Employees	Avg. Annual Gross Revenues
____ 50 or fewer	____ $1 million or less
____ 51 - 100	____ $1,000,001 - $2 million
____ 101 - 250	____ $2,000,001 - $3.5 million
____ 251 - 500	____ $3,500,001 - $5 million
____ 501 - 750	____ $5,000,001 - $10 million
____ 751 - 1,000	____ $10,000,001 - $17 million
____ Over 1,000	____ Over $17 million

(End of provision)

52.219-22 SMALL DISADVANTAGED BUSINESS STATUS (OCT 1999)

(a) General. This provision is used to assess an offeror's small disadvantaged business status for the purpose of obtaining a benefit on this solicitation. Status as a small business and status as a small disadvantaged business for general statistical purposes is covered by the provision at FAR 52.219-1, Small Business Program Representation.

(b) Representations.

(1) General. The offeror represents, as part of its offer, that it is a small business under the size standard applicable to this acquisition; and either--

___ (i) It has received certification by the Small Business Administration as a small disadvantaged business concern consistent with 13 CFR 124, Subpart B; and

(A) No material change in disadvantaged ownership and control has occurred since its certification;

(B) Where the concern is owned by one or more disadvantaged individuals, the net worth of each individual upon whom the certification is based does not exceed $750,000 after taking into account the applicable exclusions set forth at 13 CFR 124.104(c)(2); and

(C) It is identified, on the date of this representation, as a certified small disadvantaged business concern in the database maintained by the Small Business Administration(PRO0Net); or

___ (ii) It has submitted a completed application to the Small Business Administration or a Private Certifier to be certified as a small disadvantaged business concern in accordance with 13 CFR 124, Subpart B, and a decision on that application is pending, and that no material change in disadvantaged ownership and control has occurred since its application was submitted.

(2)___ For Joint Ventures. The offeror represents, as part of its offer, that it is a joint venture that complies with the requirements at 13 CFR 124.1002(f) and that the representation in paragraph (b)(1) of this provision is accurate for the small disadvantaged business concern that is participating in the joint venture. [The offeror shall enter the name of the small disadvantaged business concern that is participating in the joint venture: _____.]

(c) Penalties and Remedies. Anyone who misrepresents any aspects of the disadvantaged status of a concern for the purposes of securing a contract or subcontract shall:

(1) Be punished by imposition of a fine, imprisonment, or both;

(2) Be subject to administrative remedies, including suspension and debarment; and

(3) Be ineligible for participation in programs conducted under the authority of the Small Business Act.

(End of provision)

252.204-7001 COMMERCIAL AND GOVERNMENT ENTITY (CAGE) CODE REPORTING (AUG 1999)

(a) The offeror is requested to enter its CAGE code on its offer in the block with its name and address. The CAGE code entered must be for that name and address. Enter "CAGE" before the number.

(b) If the offeror does not have a CAGE code, it may ask the Contracting Officer to request one from the Defense Logistics Information Service (DLIS). The Contracting Officer will--

(1) Ask the Contractor to complete section B of a DD Form 2051, Request for Assignment of a Commercial and Government Entity (CAGE) Code;

(2) Complete section A and forward the form to DLIS; and

(3) Notify the Contractor of its assigned CAGE code.

(c) Do not delay submission of the offer pending receipt of a CAGE code.

(End of provision)

252.204-7004 REQUIRED CENTRAL CONTRACTOR REGISTRATION (NOV 2001)

(a) Definitions.

As used in this clause--

(1) Central Contractor Registration (CCR) database means the primary DoD repository for contractor information required for the conduct of business with DoD.

(2) Data Universal Numbering System (DUNS) number means the 9-digit number assigned by Dun and Bradstreet Information Services to identify unique business entities.

(3) Data Universal Numbering System +4 (DUNS+4) number means the DUNS number assigned by Dun and Bradstreet plus a 4-digit suffix that may be assigned by a parent (controlling) business concern. This 4-digit suffix may be assigned at the discretion of the parent business concern for such purposes as identifying subunits or affiliates of the parent business concern.

(4) Registered in the CCR database means that all mandatory information, including the DUNS number or the DUNS+4 number, if applicable, and the corresponding Commercial and Government Entity (CAGE) code, is in the CCR database; the DUNS number and the CAGE code have been validated; and all edits have been successfully completed.

(b)(1) By submission of an offer, the offeror acknowledges the requirement that a prospective awardee must be registered in the CCR database prior to award, during performance, and through final payment of any contract resulting from this solicitation, except for awards to foreign vendors for work to be performed outside the United States.

(2) The offeror shall provide its DUNS or, if applicable, its DUNS+4 number with its offer, which will be used by the Contracting Officer to verify that the offeror is registered in the CCR database.

(3) Lack of registration in the CCR database will make an offeror ineligible for award.

(4) DoD has established a goal of registering an applicant in the CCR database within 48 hours after receipt of a complete and accurate application via the Internet. However, registration of an applicant submitting an application through a method other than the Internet may take up to 30 days. Therefore, offerors that are not registered should consider applying for registration immediately upon receipt of this solicitation.

(c) The Contractor is responsible for the accuracy and completeness of the data within the CCR, and for any liability resulting from the Government's reliance on inaccurate or incomplete data. To remain registered in the CCR database after the initial registration, the Contractor is required to confirm on an annual basis that its information in the CCR database is accurate and complete.

(d) Offerors and contractors may obtain information on registration and annual confirmation requirements by calling 1-888-227-2423, or via the Internet at http://www.ccr.gov.

(End of clause)

252.209-7004 SUBCONTRACTING WITH FIRMS THAT ARE OWNED OR CONTROLLED BY THE GOVERNMENT OF A TERRORIST COUNTRY (MAR 1998)

(a) Unless the Government determines that there is a compelling reason to do so, the Contractor shall not enter into any subcontract in excess of $25,000 with a firm, or subsidiary of a firm, that is identified, on the List of Parties Excluded from Federal Procurement and Nonprocurement Programs, as being ineligible for the award of Defense contracts or subcontracts because it is owned or controlled by the government of a terrorist country.

(b) A corporate officer or a designee of the Contractor shall notify the Contracting Officer, in writing, before entering into a subcontract with a party that is identified, on the List of Parties Excluded from Federal Procurement and Nonprocurement Programs, as being ineligible for the award of Defense contracts or subcontracts because it is owned or controlled by the government of a terrorist country. The notice must include the name of the proposed subcontractor notwithstanding its inclusion on the List of Parties Excluded From Federal Procurement and Nonprocurement Programs.

(End of clause)

252.247-7022 REPRESENTATION OF EXTENT OF TRANSPORTATION BY SEA (AUG 1992)

(a) The Offeror shall indicate by checking the appropriate blank in paragraph (b) of this provision whether transportation of supplies by sea is anticipated under the resultant contract. The term supplies is defined in the Transportation of Supplies by Sea clause of this solicitation.

(b) Representation. The Offeror represents that it:

____ (1) Does anticipate that supplies will be transported by sea in the performance of any contract or subcontract resulting from this solicitation.

____ (2) Does not anticipate that supplies will be transported by sea in the performance of any contract or subcontract resulting from this solicitation.

(c) Any contract resulting from this solicitation will include the Transportation of Supplies by Sea clause. If the Offeror represents that it will not use ocean transportation, the resulting contract will also include the Defense FAR Supplement clause at 252.247-7024, Notification of Transportation of Supplies by Sea.

(End of provision)

-- End of Section --

Section 00700 - Contract Clauses

CLAUSES INCORPORATED BY REFERENCE

52.203-3 GRATUITIES (APR 1984)..... 4
52.203-5 COVENANT AGAINST CONTINGENT FEES (APR 1984)..... 4
52.203-7 ANTI-KICKBACK PROCEDURES (JUL 1995)..... 5
52.203-8 CANCELLATION, RESCISSION, AND RECOVERY OF FUNDS FOR ILLEGAL OR IMPROPER ACTIVITY (JAN 1997)..... 6
52.203-10 PRICE OR FEE ADJUSTMENT FOR ILLEGAL OR IMPROPER ACTIVITY (JAN 1997)..... 7
52.203-12 LIMITATION ON PAYMENTS TO INFLUENCE CERTAIN FEDERAL TRANSACTIONS (JUN 1997)..... 8
52.204-1 APPROVAL OF CONTRACT (DEC 1989)..... 13
52.204-4 PRINTED OR COPIED DOUBLE-SIDED ON RECYCLED PAPER (AUG 2000) 14
52.209-6 PROTECTING THE GOVERNMENT'S INTEREST WHEN SUBCONTRACTING WITH CONTRACTORS DEBARRED, SUSPENDED, OR PROPOSED FOR DEBARMENT (JUL 1995)..... 15
52.211-6 BRAND NAME OR EQUAL (AUG 1999)..... 16
52.211-18 VARIATION IN ESTIMATED QUANTITY (APR 1984)..... 16
52.211-5000 EVALUATION OF SUBDIVIDED ITEMS (MAR 1995)—EFARS..... 17
52.211-5001 VARIATIONS IN ESTIMATED QUANTITIES, SUBDIVIDED ITEMS (MAR 1995)—EFARS..... 17
52.214-26 AUDIT AND RECORDS--SEALED BIDDING (OCT 1997)..... 17
52.214-27 PRICE REDUCTION FOR DEFECTIVE COST OR PRICING DATA - MODIFICATIONS - SEALED BIDDING (OCT 1997)..... 18
52.214-28 SUBCONTRACTOR COST OR PRICING DATA - MODIFICATIONS - SEALED BIDDING (OCT 1997)..... 20
52.215-19 NOTIFICATION OF OWNERSHIP CHANGES (OCT 1997)..... 21
52.219-8 UTILIZATION OF SMALL BUSINESS CONCERNS (OCT 2000)..... 22
52.219-9 SMALL BUSINESS SUBCONTRACTING PLAN (OCT 2000)..... 23
52.222-3 CONVICT LABOR (Aug 1996)..... 29
52.222-4 CONTRACT WORK HOURS AND SAFETY STANDARDS ACT - OVERTIME COMPENSATION (SEP 2000)..... 30
52.222-6 DAVIS-BACON ACT (FEB 1995)..... 31
52.222-7 WITHHOLDING OF FUNDS (FEB 1988)..... 32
52.222-8 PAYROLLS AND BASIC RECORDS (FEB 1988)..... 33
52.222-9 APPRENTICES AND TRAINEES (FEB 1988)..... 34
52.222-10 COMPLIANCE WITH COPELAND ACT REQUIREMENTS (FEB 1988)..... 36
52.222-11 SUBCONTRACTS (LABOR STANDARDS (FEB 1988)..... 36
52.222-12 CONTRACT TERMINATION--DEBARMENT (FEB 1988)..... 36
52.222-13 COMPLIANCE WITH DAVIS-BACON AND RELATED ACT REGULATIONS (FEB 1988)..... 37
52.222-14 DISPUTES CONCERNING LABOR STANDARDS (FEB 1988)..... 37
52.222-26 EQUAL OPPORTUNITY (APR 2002)..... 37
52.222-27 AFFIRMATIVE ACTION COMPLIANCE REQUIREMENTS FOR CONSTRUCTION (FEB 1999)..... 39
52.222-30 DAVIS-BACON ACT--PRICE ADJUSTMENT (NONE OR SEPARATELY SPECIFIED METHOD) (DEC 2001)..... 44
52.222-36 AFFIRMATIVE ACTION FOR WORKERS WITH DISABILITIES (JUN 1998) 44
52.222-37 EMPLOYMENT REPORTS ON DISABLED VETERANS AND VETERANS OF THE VIETNAM ERA (JAN 1999)..... 46
52.223-5 POLLUTION PREVENTION AND RIGHT-TO-KNOW INFORMATION (APR 1998)..... 47
52.223-6 DRUG-FREE WORKPLACE (MAY 2001)..... 47

52.223-14 TOXIC CHEMICAL RELEASE REPORTING (OCT 2000)..... 49
52.225-12 NOTICE OF BUY AMERICAN ACT REQUIREMENT-- CONSTRUCTION MATERIALS UNDER TRADE AGREEMENTS (MAY 2002)..... 50
52.225-13 RESTRICTIONS ON CERTAIN FOREIGN PURCHASES (JUL 2000)..... 51
52.226-1 UTILIZATION OF INDIAN ORGANIZATIONS AND INDIAN-OWNED ECONOMIC ENTERPRISES (JUN 2000)..... 52
52.227-1 AUTHORIZATION AND CONSENT (JUL 1995)..... 53
52.227-2 NOTICE AND ASSISTANCE REGARDING PATENT AND COPYRIGHT INFRINGEMENT (AUG 1996)..... 54
52.227-4 PATENT INDEMNITY--CONSTRUCTION CONTRACTS (APR 1984)..... 54
52.228-11 PLEDGES OF ASSETS (FEB 1992)..... 54
52.229-3 FEDERAL, STATE, AND LOCAL TAXES (JAN 1991)..... 55
52.229-5 TAXES--CONTRACTS PERFORMED IN U.S. POSSESSIONS OR PUERTO RICO (APR 1984)..... 56
52.232-5 PAYMENTS UNDER FIXED-PRICE CONSTRUCTION CONTRACTS (MAY 1997) 56
52.232-17 INTEREST (JUNE 1996)..... 59
52.232-23 ASSIGNMENT OF CLAIMS (JAN 1986)..... 60
52.232-27 PROMPT PAYMENT FOR CONSTRUCTION CONTRACTS (FEB 2002)..... 60
52.232-29 TERMS FOR FINANCING OF PURCHASES OF COMMERCIAL ITEMS (FEB 2002)..... 68
52.232-33 PAYMENT BY ELECTRONIC FUNDS TRANSFER—CENTRAL CONTRACTOR REGISTRATION (MAY 1999)..... 69
52.233-1 DISPUTES (JUL 2002)..... 71
52.233-3 PROTEST AFTER AWARD (AUG. 1996)..... 73
52.236-2 DIFFERING SITE CONDITIONS (APR 1984)..... 74
52.236-3 SITE INVESTIGATION AND CONDITIONS AFFECTING THE WORK (APR 1984)..... 75
52.236-5 MATERIAL AND WORKMANSHIP (APR 1984)..... 75
52.236-6 SUPERINTENDENCE BY THE CONTRACTOR (APR 1984)..... 76
52.236-7 PERMITS AND RESPONSIBILITIES (NOV 1991)..... 76
52.236-8 OTHER CONTRACTS (APR 1984)..... 77
52.236-9 PROTECTION OF EXISTING VEGETATION, STRUCTURES, EQUIPMENT, UTILITIES, AND IMPROVEMENTS (APR 1984)..... 77
52.236-10 OPERATIONS AND STORAGE AREAS (APR 1984)..... 77
52.236-11 USE AND POSSESSION PRIOR TO COMPLETION (APR 1984)..... 78
52.236-12 CLEANING UP (APR 1984)..... 78
52.236-13 ACCIDENT PREVENTION (NOV 1991)..... 78
52.236-17 LAYOUT OF WORK (APR 1984)..... 79
52.236-21 SPECIFICATIONS AND DRAWINGS FOR CONSTRUCTION (FEB 1997).. 80
52.236-26 PRECONSTRUCTION CONFERENCE (FEB 1995)..... 81
52.242-13 BANKRUPTCY (JUL 1995)..... 81
52.242-14 SUSPENSION OF WORK (APR 1984)..... 81
52.243-4 CHANGES (AUG 1987)..... 82
52.244-6 SUBCONTRACTS FOR COMMERCIAL ITEMS (MAY 2002)..... 83
52.246-12 INSPECTION OF CONSTRUCTION (AUG 1996)..... 84
52.246-21 WARRANTY OF CONSTRUCTION (MAR 1994)..... 85
52.248-3 VALUE ENGINEERING--CONSTRUCTION (FEB 2000)..... 87
52.249-2 TERMINATION FOR CONVENIENCE OF THE GOVERNMENT (FIXED-PRICE) (SEP 1996)..... 90
52.249-10 DEFAULT (FIXED-PRICE CONSTRUCTION) (APR 1984)..... 94
52.252-2 CLAUSES INCORPORATED BY REFERENCE (FEB 1998)..... 95
52.252-4 ALTERATIONS IN CONTRACT (APR 1984)..... 95
52.253-1 COMPUTER GENERATED FORMS (JAN 1991)..... 96
252.201-7000 CONTRACTING OFFICER'S REPRESENTATIVE (DEC 1991)..... 96
252.203-7001 PROHIBITION ON PERSONS CONVICTED OF FRAUD OR OTHER DEFENSE-CONTRACT-RELATED FELONIES (MAR 1999)..... 96

252.203-7002 DISPLAY OF DOD HOTLINE POSTER (DEC 1991)..... 98
252.204-7000 DISCLOSURE OF INFORMATION (DEC 1991)..... 98
252.205-7000 PROVISION OF INFORMATION TO COOPERATIVE AGREEMENT HOLDERS (DEC 1991)..... 99
252.209-7000 ACQUISITION FROM SUBCONTRACTORS SUBJECT TO ONSITE INSPECTION UNDER THE INTERMEDIATE-RANGE NUCLEAR FORCES (INF) TREATY (NOV 1995)..... 99
252.223-7004 DRUG-FREE WORK FORCE (SEP 1988)..... 99
252.225-7012 PREFERENCE FOR CERTAIN DOMESTIC COMMODITIES (APR 2002) 101
252.225-7031 SECONDARY ARAB BOYCOTT OF ISRAEL (JUN 1992)..... 103
252.227-7000 NON-ESTOPPEL (OCT 1966)..... 103
252.227-7022 GOVERNMENT RIGHTS (UNLIMITED) (MAR 1979)..... 103
252.227-7023 DRAWINGS AND OTHER DATA TO BECOME PROPERTY OF GOVERNMENT (MAR 1979)..... 103
252.227-7033 RIGHTS IN SHOP DRAWINGS (APR 1966)..... 104
252.231-7000 SUPPLEMENTAL COST PRINCIPLES (DEC 1991)..... 104
252.236-7000 MODIFICATION PROPOSALS - PRICE BREAKDOWN (DEC 1991).. 104
252.236-7008 CONTRACT PRICES - BIDDING SCHEDULES (DEC 1991)..... 105
252.242-7000 POSTAWARD CONFERENCE (DEC 1991)..... 105
252.243-7001 PRICING OF CONTRACT MODIFICATIONS (DEC 1991)..... 105
252.243-7002 REQUESTS FOR EQUITABLE ADJUSTMENT (MAR 1998)..... 105
252.247-7004 INDEFINITE QUANTITIES - FIXED CHARGES (DEC 1991)..... 106

SECTION 00700
CONTRACT CLAUSES

52.203-3 GRATUITIES (APR 1984)

(a) The right of the Contractor to proceed may be terminated by written notice if, after notice and hearing, the agency head or a designee determines that the Contractor, its agent, or another representative--

(1) Offered or gave a gratuity (e.g., an entertainment or gift) to an officer, official, or employee of the Government; and

(2) Intended, by the gratuity, to obtain a contract or favorable treatment under a contract.

(b) The facts supporting this determination may be reviewed by any court having lawful jurisdiction.

(c) If this contract is terminated under paragraph (a) of this clause, the Government is entitled--

(1) To pursue the same remedies as in a breach of the contract; and

(2) In addition to any other damages provided by law, to exemplary damages of not less than 3 nor more than 10 times the cost incurred by the Contractor in giving gratuities to the person concerned, as determined by the agency head or a designee. (This subparagraph (c)(2) is applicable only if this contract uses money appropriated to the Department of Defense.)

(d) The rights and remedies of the Government provided in this clause shall not be exclusive and are in addition to any other rights and remedies provided by law or under this contract.

(End of clause)

52.203-5 COVENANT AGAINST CONTINGENT FEES (APR 1984)

(a) The Contractor warrants that no person or agency has been employed or retained to solicit or obtain this contract upon an agreement or understanding for a contingent fee, except a bona fide employee or agency. For breach or violation of this warranty, the Government shall have the right to annul this contract without liability or, in its discretion, to deduct from the contract price or consideration, or otherwise recover, the full amount of the contingent fee.

(b) "Bona fide agency," as used in this clause, means an established commercial or selling agency, maintained by a contractor for the purpose of securing business, that neither exerts nor proposes to exert improper influence to solicit or obtain Government contracts nor holds itself out as being able to obtain any Government contract or contracts through improper influence.

"Bona fide employee," as used in this clause, means a person, employed by a contractor and subject to the contractor's supervision and control

as to time, place, and manner of performance, who neither exerts nor proposes to exert improper influence to solicit or obtain Government contracts nor holds out as being able to obtain any Government contract or contracts through improper influence.

"Contingent fee," as used in this clause, means any commission, percentage, brokerage, or other fee that is contingent upon the success that a person or concern has in securing a Government contract.

"Improper influence," as used in this clause, means any influence that induces or tends to induce a Government employee or officer to give consideration or to act regarding a Government contract on any basis other than the merits of the matter.

(End of clause)

52.203-7 ANTI-KICKBACK PROCEDURES (JUL 1995)

(a) Definitions.

"Kickback," as used in this clause, means any money, fee, commission, credit, gift, gratuity, thing of value, or compensation of any kind which is provided, directly or indirectly, to any prime Contractor, prime Contractor employee, subcontractor, or subcontractor employee for the purpose of improperly obtaining or rewarding favorable treatment in connection with a prime contract or in connection with a subcontract relating to a prime contract.

"Person," as used in this clause, means a corporation, partnership, business association of any kind, trust, joint-stock company, or individual.

"Prime contract," as used in this clause, means a contract or contractual action entered into by the United States for the purpose of obtaining supplies, materials, equipment, or services of any kind.

"Prime Contractor," as used in this clause, means a person who has entered into a prime contract with the United States.

"Prime Contractor employee," as used in this clause, means any officer, partner, employee, or agent of a prime Contractor.

"Subcontract," as used in this clause, means a contract or contractual action entered into by a prime Contractor or subcontractor for the purpose of obtaining supplies, materials, equipment, or services of any kind under a prime contract.

"Subcontractor," as used in this clause, (1) means any person, other than the prime Contractor, who offers to furnish or furnishes any supplies, materials, equipment, or services of any kind under a prime contract or a subcontract entered into in connection with such prime contract, and (2) includes any person who offers to furnish or furnishes general supplies to the prime Contractor or a higher tier subcontractor.

"Subcontractor employee," as used in this clause, means any officer, partner, employee, or agent of a subcontractor.

(b) The Anti-Kickback Act of 1986 (41 U.S.C. 51-58) (the Act), prohibits any person from -

(1) Providing or attempting to provide or offering to provide any kickback;

(2) Soliciting, accepting, or attempting to accept any kickback; or

(3) Including, directly or indirectly, the amount of any kickback in the contract price charged by a prime Contractor to the United States or in the contract price charged by a subcontractor to a prime Contractor or higher tier subcontractor.

(c)(1) The Contractor shall have in place and follow reasonable procedures designed to prevent and detect possible violations described in paragraph (b) of this clause in its own operations and direct business relationships.

(2) When the Contractor has reasonable grounds to believe that a violation described in paragraph (b) of this clause may have occurred, the Contractor shall promptly report in writing the possible violation. Such reports shall be made to the inspector general of the contracting agency, the head of the contracting agency if the agency does not have an inspector general, or the Department of Justice.

(3) The Contractor shall cooperate fully with any Federal agency investigating a possible violation described in paragraph (b) of this clause.

(4) The Contracting Officer may (i) offset the amount of the kickback against any monies owed by the United States under the prime contract and/or (ii) direct that the Prime Contractor withhold, from sums owed a subcontractor under the prime contract, the amount of any kickback. The Contracting Officer may order the monies withheld under subdivision (c)(4)(ii) of this clause be paid over to the Government unless the Government has already offset those monies under subdivision (c)(4)(i) of this clause. In either case, the Prime Contractor shall notify the Contracting Officer when the monies are withheld.

(5) The Contractor agrees to incorporate the substance of this clause, including this subparagraph (c)(5) but excepting subparagraph (c)(1), in all subcontracts under this contract which exceed $100,000.

52.203-8 CANCELLATION, RESCISSION, AND RECOVERY OF FUNDS FOR ILLEGAL OR IMPROPER ACTIVITY (JAN 1997)

(a) If the Government receives information that a contractor or a person has engaged in conduct constituting a violation of subsection (a), (b), (c), or (d) of Section 27 of the Office of Federal Procurement Policy Act (41 U.S.C. 423) (the Act), as amended by section 4304 of the 1996 National Defense Authorization Act for Fiscal Year 1996 (Pub. L. 104-106), the Government may--

(1) Cancel the solicitation, if the contract has not yet been awarded or issued; or

(2) Rescind the contract with respect to which--

(i) The Contractor or someone acting for the Contractor has been convicted for an offense where the conduct constitutes a violation of subsection 27(a) or (b) of the Act for the purpose of either--

(A) Exchanging the information covered by such subsections for anything of value; or

(B) Obtaining or giving anyone a competitive advantage in the award of a Federal agency procurement contract; or

(ii) The head of the contracting activity has determined, based upon a preponderance of the evidence, that the Contractor or someone acting for the Contractor has engaged in conduct constituting an offense punishable under subsections 27(e)(1) of the Act.

(b) If the Government rescinds the contract under paragraph (a) of this clause, the Government is entitled to recover, in addition to any penalty prescribed by law, the amount expended under the contract.

(c) The rights and remedies of the Government specified herein are not exclusive, and are in addition to any other rights and remedies provided by law, regulation, or under this contract.

(End of clause)

52.203-10 PRICE OR FEE ADJUSTMENT FOR ILLEGAL OR IMPROPER ACTIVITY (JAN 1997)

(a) The Government, at its election, may reduce the price of a fixed-price type contract and the total cost and fee under a cost-type contract by the amount of profit or fee determined as set forth in paragraph (b) of this clause if the head of the contracting activity or designee determines that there was a violation of subsection 27 (a), (b), or (c) of the Office of Federal Procurement Policy Act, as amended (41 U.S.C. 423), as implemented in section 3.104 of the Federal Acquisition Regulation.

(b) The price or fee reduction referred to in paragraph (a) of this clause shall be--

(1) For cost-plus-fixed-fee contracts, the amount of the fee specified in the contract at the time of award;

(2) For cost-plus-incentive-fee contracts, the target fee specified in the contract at the time of award, notwithstanding any minimum fee or "fee floor" specified in the contract;

(3) For cost-plus-award-fee contracts--

(i) The base fee established in the contract at the time of contract award;

(ii) If no base fee is specified in the contract, 30 percent of the amount of each award fee otherwise payable to the Contractor for each award fee evaluation period or at each award fee determination point.

(4) For fixed-price-incentive contracts, the Government may--

(i) Reduce the contract target price and contract target profit both by an amount equal to the initial target profit specified in the contract at the time of contract award; or

(ii) If an immediate adjustment to the contract target price and contract target profit would have a significant adverse impact on the incentive price revision relationship under the contract, or adversely affect the contract financing provisions, the Contracting Officer may defer such adjustment until establishment of the total final price of the contract. The total final price established in accordance with the incentive price revision provisions of the contract shall be reduced by an amount equal to the initial target profit specified in the contract at the time of contract award and such reduced price shall be the total final contract price.

(5) For firm-fixed-price contracts, by 10 percent of the initial contract price or a profit amount determined by the Contracting Officer from records or documents in existence prior to the date of the contract award.

(c) The Government may, at its election, reduce a prime contractor's price or fee in accordance with the procedures of paragraph (b) of this clause for violations of the Act by its subcontractors by an amount not to exceed the amount of profit or fee reflected in the subcontract at the time the subcontract was first definitively priced.

(d) In addition to the remedies in paragraphs (a) and (c) of this clause, the Government may terminate this contract for default. The rights and remedies of the Government specified herein are not exclusive, and are in addition to any other rights and remedies provided by law or under this contract.

(End of clause)

52.203-12 LIMITATION ON PAYMENTS TO INFLUENCE CERTAIN FEDERAL TRANSACTIONS (JUN 1997)

(a) Definitions.

"Agency," as used in this clause, means executive agency as defined in 2.101.

"Covered Federal action," as used in this clause, means any of the following Federal actions:

(1) The awarding of any Federal contract.

(2) The making of any Federal grant.

(3) The making of any Federal loan.

(4) The entering into of any cooperative agreement.

(5) The extension, continuation, renewal, amendment, or modification of any Federal contract, grant, loan, or cooperative agreement.

"Indian tribe" and "tribal organization," as used in this clause, have the meaning provided in section 4 of the Indian Self-Determination and Education Assistance Act (25 U.S.C. 450B) and include Alaskan Natives.

"Influencing or attempting to influence," as used in this clause, means making, with the intent to influence, any communication to or appearance before an officer or employee of any agency, a Member of Congress, an officer or employee of Congress, or an employee of a Member of Congress in connection with any covered Federal action.

"Local government," as used in this clause, means a unit of government in a State and, if chartered, established, or otherwise recognized by a State for the performance of a governmental duty, including a local public authority, a special district, an intrastate district, a council of governments, a sponsor group representative organization, and any other instrumentality of a local government.

"Officer or employee of an agency," as used in this clause, includes the following individuals who are employed by an agency:

(1) An individual who is appointed to a position in the Government under Title 5, United States Code, including a position under a temporary appointment.

(2) A member of the uniformed services, as defined in subsection 101(3),Title 37, United States Code.

(3) A special Government employee, as defined in section 202, Title 18, United States Code.

(4) An individual who is a member of a Federal advisory committee, as defined by the Federal Advisory Committee Act, Title 5, United States Code, appendix 2.

"Person," as used in this clause, means an individual, corporation, company, association, authority, firm, partnership, society, State, and local government, regardless of whether such entity is operated for profit, or not for profit. This term excludes an Indian tribe, tribal organization, or any other Indian organization with respect to expenditures specifically permitted by other Federal law.

"Reasonable compensation," as used in this clause, means, with respect to a regularly employed officer or employee of any person, compensation that is consistent with the normal compensation for such officer or employee for work that is not furnished to, not funded by, or not furnished in cooperation with the Federal Government.

"Reasonable payment," as used in this clause, means, with respect to professional and other technical services, a payment in an amount that is consistent with the amount normally paid for such services in the private sector.

"Recipient," as used in this clause, includes the Contractor and all subcontractors. This term excludes an Indian tribe, tribal organization, or any other Indian organization with respect to expenditures specifically permitted by other Federal law.

"Regularly employed," as used in this clause, means, with respect to an officer or employee of a person requesting or receiving a Federal contract, an officer or employee who is employed by such person for at least 130 working days within 1 year immediately preceding the date of the submission that initiates agency consideration of such person for receipt of such contract. An officer or employee who is employed by such person for less than 130 working days within 1 year immediately preceding the date of the submission that initiates agency consideration of such person shall be considered to be regularly employed as soon as he or she is employed by such person for 130 working days.

"State," as used in this clause, means a State of the United States, the District of Columbia, the Commonwealth of Puerto Rico, a territory or possession of the United States, an agency or instrumentality of a State, and multi-State, regional, or interstate entity having governmental duties and powers.

(b) Prohibitions.

(1) Section 1352 of Title 31, United States Code, among other things, prohibits a recipient of a Federal contract, grant, loan, or cooperative agreement from using appropriated funds to pay any person for influencing or attempting to influence an officer or employee of any agency, a Member of Congress, an officer or employee of Congress, or an employee of a Member of Congress in connection with any of the following covered Federal actions: the awarding of any Federal contract; the making of any Federal grant; the making of any Federal loan; the entering into of any cooperative agreement; or the modification of any Federal contract, grant, loan, or cooperative agreement.

(2) The Act also requires Contractors to furnish a disclosure if any funds other than Federal appropriated funds (including profit or fee received under a covered Federal transaction) have been paid, or will be paid, to any person for influencing or attempting to influence an officer or employee of any agency, a Member of Congress, an officer or employee of Congress, or an employee of a Member of Congress in connection with a Federal contract, grant, loan, or cooperative agreement.

(3) The prohibitions of the Act do not apply under the following conditions:

(i) Agency and legislative liaison by own employees.

(A) The prohibition on the use of appropriated funds, in subparagraph (b)(1) of this clause, does not apply in the case of a payment of reasonable compensation made to an officer or employee of a person requesting or receiving a covered Federal action if the payment is for agency and legislative liaison activities not directly related to a covered Federal action.

(B) For purposes of subdivision (b)(3)(i)(A) of this clause, providing any information specifically requested by an agency or Congress is permitted at any time.

(C) The following agency and legislative liaison activities are permitted at any time where they are not related to a specific solicitation for any covered Federal action:

(1) Discussing with an agency the qualities and characteristics (including individual demonstrations) of the person's products or services, conditions or terms of sale, and service capabilities.

(2) Technical discussions and other activities regarding the application or adaptation of the person's products or services for an agency's use.

(D) The following agency and legislative liaison activities are permitted where they are prior to formal solicitation of any covered Federal action--

(1) Providing any information not specifically requested but necessary for an agency to make an informed decision about initiation of a covered Federal action;

(2) Technical discussions regarding the preparation of an unsolicited proposal prior to its official submission; and

(3) Capability presentations by persons seeking awards from an agency pursuant to the provisions of the Small Business Act, as amended by Pub. L. 95-507, and subsequent amendments.

(E) Only those services expressly authorized by subdivision (b)(3)(i)(A) of this clause are permitted under this clause.

(ii) Professional and technical services.

(A) The prohibition on the use of appropriated funds, in subparagraph (b)(1) of this clause, does not apply in the case of--

(1) A payment of reasonable compensation made to an officer or employee of a person requesting or receiving a covered Federal action or an extension, continuation, renewal, amendment, or modification of a covered Federal action, if payment is for professional or technical services rendered directly in the preparation, submission, or negotiation of any bid, proposal, or application for that Federal action or for meeting requirements imposed by or pursuant to law as a condition for receiving that Federal action.

(2) Any reasonable payment to a person, other than an officer or employee of a person requesting or receiving a covered Federal action or an extension, continuation, renewal, amendment, or modification of a covered Federal action if the payment is for professional or technical services rendered directly in the preparation, submission, or negotiation of any bid, proposal, or application for that Federal action or for meeting requirements imposed by or pursuant to law as a condition for receiving that Federal action. Persons other than

officers or employees of a person requesting or receiving a covered Federal action include consultants and trade associations.

(B) For purposes of subdivision (b)(3)(ii)(A) of this clause, "professional and technical services" shall be limited to advice and analysis directly applying any professional or technical discipline. For example, drafting of a legal document accompanying a bid or proposal by a lawyer is allowable. Similarly, technical advice provided by an engineer on the performance or operational capability of a piece of equipment rendered directly in the negotiation of a contract is allowable. However, communications with the intent to influence made by a professional (such as a licensed lawyer) or a technical person (such as a licensed accountant) are not allowable under this section unless they provide advice and analysis directly applying their professional or technical expertise and unless the advice or analysis is rendered directly and solely in the preparation, submission or negotiation of a covered Federal action. Thus, for example, communications with the intent to influence made by a lawyer that do not provide legal advice or analysis directly and solely related to the legal aspects of his or her client's proposal, but generally advocate one proposal over another are not allowable under this section because the lawyer is not providing professional legal services. Similarly, communications with the intent to influence made by an engineer providing an engineering analysis prior to the preparation or submission of a bid or proposal are not allowable under this section since the engineer is providing technical services but not directly in the preparation, submission or negotiation of a covered Federal action.

(C) Requirements imposed by or pursuant to law as a condition for receiving a covered Federal award include those required by law or regulation and any other requirements in the actual award documents.

(D) Only those services expressly authorized by subdivisions (b)(3)(ii)(A)(1) and (2) of this clause are permitted under this clause.

(E) The reporting requirements of FAR 3.803(a) shall not apply with respect to payments of reasonable compensation made to regularly employed officers or employees of a person.

(c) Disclosure.

(1) The Contractor who requests or receives from an agency a Federal contract shall file with that agency a disclosure form, OMB standard form LLL, Disclosure of Lobbying Activities, if such person has made or has agreed to make any payment using nonappropriated funds (to include profits from any covered Federal action), which would be prohibited under subparagraph (b)(1) of this clause, if paid for with appropriated funds.

(2) The Contractor shall file a disclosure form at the end of each calendar quarter in which there occurs any event that materially affects the accuracy of the information contained in any disclosure form previously filed by such person under subparagraph (c)(1) of this clause. An event that materially affects the accuracy of the information reported includes--

(i) A cumulative increase of $25,000 or more in the amount paid or expected to be paid for influencing or attempting to influence a covered Federal action; or

(ii) A change in the person(s) or individual(s) influencing or attempting to influence a covered Federal action; or

(iii) A change in the officer(s), employee(s), or Member(s) contacted to influence or attempt to influence a covered Federal action.

(3) The Contractor shall require the submittal of a certification, and if required, a disclosure form by any person who requests or receives any subcontract exceeding $100,000 under the Federal contract.

(4) All subcontractor disclosure forms (but not certifications) shall be forwarded from tier to tier until received by the prime Contractor. The prime Contractor shall submit all disclosures to the Contracting Officer at the end of the calendar quarter in which the disclosure form is submitted by the subcontractor. Each subcontractor certification shall be retained in the subcontract file of the awarding Contractor.

(d) Agreement. The Contractor agrees not to make any payment prohibited by this clause.

(e) Penalties.

(1) Any person who makes an expenditure prohibited under paragraph (a) of this clause or who fails to file or amend the disclosure form to be filed or amended by paragraph (b) of this clause shall be subject to civil penalties as provided for by 31 U.S.C. 1352. An imposition of a civil penalty does not prevent the Government from seeking any other remedy that may be applicable.

(2) Contractors may rely without liability on the representation made by their subcontractors in the certification and disclosure form.

(f) Cost allowability. Nothing in this clause makes allowable or reasonable any costs which would otherwise be unallowable or unreasonable. Conversely, costs made specifically unallowable by the requirements in this clause will not be made allowable under any other provision.

(End of clause)

52.204-1 APPROVAL OF CONTRACT (DEC 1989)

This contract is subject to the written approval of the Contracting Officer and shall not be binding until so approved.

(End of clause)

52.204-4 PRINTED OR COPIED DOUBLE-SIDED ON RECYCLED PAPER (AUG 2000)

(a) Definitions. As used in this clause--

"Postconsumer material" means a material or finished product that has served its intended use and has been discarded for disposal or recovery, having completed its life as a consumer item. Postconsumer material is a part of the broader category of "recovered material." For paper and paper products, postconsumer material means "postconsumer fiber" defined by the U.S. Environmental Protection Agency (EPA) as--

(1) Paper, paperboard, and fibrous materials from retail stores, office buildings, homes, and so forth, after they have passed through their end-usage as a consumer item, including: used corrugated boxes; old newspapers; old magazines; mixed waste paper; tabulating cards; and used cordage; or

(2) All paper, paperboard, and fibrous materials that enter and are collected from municipal solid waste; but not

(3) Fiber derived from printers' over-runs, converters' scrap, and over-issue publications.

"Printed or copied double-sided" means printing or reproducing a document so that information is on both sides of a sheet of paper.

"Recovered material," for paper and paper products, is defined by EPA in its Comprehensive Procurement Guideline as "recovered fiber" and means the following materials:

(1) Postconsumer fiber; and

(2) Manufacturing wastes such as--

(i) Dry paper and paperboard waste generated after completion of the papermaking process (that is, those manufacturing operations up to and including the cutting and trimming of the paper machine reel into smaller rolls or rough sheets) including: envelope cuttings, bindery trimmings, and other paper and paperboard waste resulting from printing, cutting, forming, and other converting operations; bag, box, and carton manufacturing wastes; and butt rolls, mill wrappers, and rejected unused stock; and

(ii) Repulped finished paper and paperboard from obsolete inventories of paper and paperboard manufacturers, merchants, wholesalers, dealers, printers, converters, or others.

(b) In accordance with Section 101 of Executive Order 13101 of September 14, 1998, Greening the Government through Waste Prevention, Recycling, and Federal Acquisition, the Contractor is encouraged to submit paper documents, such as offers, letters, or reports, that are printed or copied double-sided on recycled paper that meet minimum content standards specified in Section 505 of Executive Order 13101,

when not using electronic commerce methods to submit information or data to the Government.

(c) If the Contractor cannot purchase high-speed copier paper, offset paper, forms bond, computer printout paper, carbonless paper, file folders, white wove envelopes, writing and office paper, book paper, cotton fiber paper, and cover stock meeting the 30 percent postconsumer material standard for use in submitting paper documents to the Government, it should use paper containing no less than 20 percent postconsumer material. This lesser standard should be used only when paper meeting the 30 percent postconsumer material standard is not obtainable at a reasonable price or does not meet reasonable performance standards.

(End of clause)

52.209-6 PROTECTING THE GOVERNMENT'S INTEREST WHEN SUBCONTRACTING WITH CONTRACTORS DEBARRED, SUSPENDED, OR PROPOSED FOR DEBARMENT (JUL 1995)

(a) The Government suspends or debars Contractors to protect the Government's interests. The Contractor shall not enter into any subcontract in excess of the $25,000 with a Contractor that is debarred, suspended, or proposed for debarment unless there is a compelling reason to do so.

(b) The Contractor shall require each proposed first-tier subcontractor, whose subcontract will exceed $25,000, to disclose to the Contractor, in writing, whether as of the time of award of the subcontract, the subcontractor, or its principles, is or is not debarred, suspended, or proposed for debarment by the Federal Government.

(c) A corporate officer or a designee of the Contractor shall notify the Contracting Officer, in writing, before entering into a subcontract with a party that is debarred, suspended, or proposed for debarment (see FAR 9.404 for information on the List of Parties Excluded from Federal Procurement and Nonprocurement Programs). The notice must include the following:

(1) The name of the subcontractor.

(2) The Contractor's knowledge of the reasons for the subcontractor being on the List of Parties Excluded from Federal Procurement and Nonprocurement Programs.

(3) The compelling reason(s) for doing business with the subcontractor notwithstanding its inclusion on the List of Parties Excluded from Federal Procurement and Nonprocurement Programs.

(4) The systems and procedures the Contractor has established to ensure that it is fully protecting the Government's interests when dealing with such subcontractor in view of the specific basis for the party's debarment, suspension, or proposed debarment.

(End of clause)

52.211-6 BRAND NAME OR EQUAL (AUG 1999)

(a) If an item in this solicitation is identified as "brand name or equal," the purchase description reflects the characteristics and level of quality that will satisfy the Government's needs. The salient physical, functional, or performance characteristics that "equal" products must meet are specified in the solicitation.

(b) To be considered for award, offers of "equal" products, including "equal" products of the brand name manufacturer, must--

(1) Meet the salient physical, functional, or performance characteristic specified in this solicitation;

(2) Clearly identify the item by--

(i) Brand name, if any; and

(ii) Make or model number;

(3) Include descriptive literature such as illustrations, drawings, or a clear reference to previously furnished descriptive data or information available to the Contracting Officer; and

(4) Clearly describe any modifications the offeror plans to make in a product to make it conform to the solicitation requirements. Mark any descriptive material to clearly show the modifications.

(c) The Contracting Officer will evaluate "equal" products on the basis of information furnished by the offeror or identified in the offer and reasonably available to the Contracting Officer. The Contracting Officer is not responsible for locating or obtaining any information not identified in the offer.

(d) Unless the offeror clearly indicates in its offer that the product being offered is an "equal" product, the offeror shall provide the brand name product referenced in the solicitation.

(End of provision)

52.211-18 VARIATION IN ESTIMATED QUANTITY (APR 1984)

If the quantity of a unit-priced item in this contract is an estimated quantity and the actual quantity of the unit-priced item varies more than 15 percent above or below the estimated quantity, an equitable adjustment in the contract price shall be made upon demand of either party. The equitable adjustment shall be based upon any increase or decrease in costs due solely to the variation above 115 percent or below 85 percent of the estimated quantity. If the quantity variation is such as to cause an increase in the time necessary for completion, the Contractor may request, in writing, an extension of time, to be received by the Contracting Officer within 10 days from the beginning of the delay, or within such further period as may be granted by the Contracting Officer before the date of final settlement of the contract. Upon the receipt of a written request for an extension, the Contracting Officer shall ascertain the facts and make an adjustment

for extending the completion date as, in the judgement of the Contracting Officer, is justified.

52.211-5000 EVALUATION OF SUBDIVIDED ITEMS (MAR 1995)—EFARS

Item Nos._____are subdivided into two or more estimated quantities and are to be separately priced. The Government will evaluate each of these items on the basis of total price of its sub-items.

(End of clause)

52.211-5001 VARIATIONS IN ESTIMATED QUANTITIES, SUBDIVIDED ITEMS (MAR 1995)—EFARS

This variation in estimated quantities clause is applicable only to Items Nos._____.

(a) Variation from the estimated quantity in the actual work performed under any second or subsequent sub-item or elimination of all work under such a second or subsequent sub-item will not be the basis for an adjustment in contract unit price.

(b) Where the actual quantity of work performed for Items Nos._____ is less than 85% of the quantity of the first sub-item listed under such item, the contractor will be paid at the contract unit price for that sub-item for the actual quantity of work performed and, in addition, an equitable adjustment shall be made in accordance with the clause FAR 52.212-11, Variation in Estimated Quantities.

(c) If the actual quantity of work performed under Items Nos. _____ exceeds 115% or is less than 85% of the total estimated quantity of the sub-item under that item and/or if the quantity of the work performed under the second sub-item or any subsequent sub-item under Items Nos._____ exceeds 115% or is less than 85% of the estimated quantity of any such sub-item, and if such variation causes an increase or a decrease in the time required for performance of this contract the contract completion time will be adjusted in accordance with the clause FAR 52.212-11, Variation in Estimated Quantities.

(End of clause)

52.214-26 AUDIT AND RECORDS--SEALED BIDDING (OCT 1997)

(a) As used in this clause, records includes books, documents, accounting procedures and practices, and other data, regardless of type and regardless of whether such items are in written form, in the form of computer data, or in any other form.

(b) Cost or pricing data. If the Contractor has been required to submit cost or pricing data in connection with the pricing of any modification to this contract, the Contracting Officer, or an authorized representative of the Contracting Officer, in order to evaluate the accuracy, completeness, and currency of the cost or pricing data, shall have the right to examine and audit all of the Contractor's records, including computations and projections, related to--

(1) The proposal for the modification;

(2) The discussions conducted on the proposal(s), including those related to negotiating;

(3) Pricing of the modification; or

(4) Performance of the modification.

(c) Comptroller General. In the case of pricing any modification, the Comptroller General of the United States, or an authorized representative, shall have the same rights as specified in paragraph (b) of this clause.

(d) Availability. The Contractor shall make available at its office at all reasonable times the materials described in reproduction, until 3 years after final payment under this contract, or for any other period specified in Subpart 4.7 of the Federal Acquisition Regulation (FAR). FAR Subpart 4.7, Contractor Records Retention, in effect on the data of this contract, is incorporated by reference in its entirety and made a part of this contract.

(1) If this contract is completely or partially terminated, the records relating to the work terminated shall be made available for 3 years after any resulting final termination settlement.

(2) Records pertaining to appeals under the Disputes clause or to litigation or the settlement of claims arising under or relating to the performance of this contract shall be made available until disposition of such appeals, litigation, or claims.

(e) The Contractor shall insert a clause containing all the provisions of this clause, including this paragraph (e), in all subcontracts expected to exceed the threshold in FAR 15.403-4(a)(1) for submission of cost or pricing data.

(End of clause)

52.214-27 PRICE REDUCTION FOR DEFECTIVE COST OR PRICING DATA - MODIFICATIONS - SEALED BIDDING (OCT 1997)

(a) This clause shall become operative only for any modification to this contract involving aggregate increases and/or decreases in costs, plus applicable profits, expected to exceed the threshold for the submission of cost or pricing data at FAR 15.403-4(a)(1), except that this clause does not apply to a modification if an exception under FAR 15.403-1(b) applies.

(1) Based on adequate price competition;

(2) Based on established catalog or market prices of commercial items sold in substantial quantities to the general public; or

(3) Set by law or regulation.

(b) If any price, including profit, negotiated in connection with any modification under this clause, was increased by any significant amount because

(1) the Contractor or a subcontractor furnished cost or pricing data that were not complete, accurate, and current as certified in its Certificate of Current Cost or Pricing Data;

(2) a subcontractor or prospective subcontractor furnished the Contractor cost or pricing data that were not complete, accurate, and current as certified in the Contractor's Certificate of Current Cost or Pricing Data; or

(3) any of these parties furnished data of any description that were not accurate, the price shall be reduced accordingly and the contract shall be modified to reflect the reduction. This right to a price reduction is limited to that resulting from defects in data relating to modifications for which this clause becomes operative under paragraph (a) above.

(c) Any reduction in the contract price under paragraph (b) above due to defective data from a prospective subcontractor that was not subsequently awarded the subcontract shall be limited to the amount, plus applicable overhead and profit markup, by which:

(1) the actual subcontract; or

(2) the actual cost to the Contractor, if there was no subcontract, was less than the prospective subcontract cost estimate submitted by the Contractor; provided, that the actual subcontract price was not itself affected by defective cost or pricing data.

(d) If the Contracting Officer determines under paragraph (b) of this clause that a price or cost reduction should be made:

(1) the Contractor agrees not to raise the following matters as a defense:

(i) The Contractor or subcontractor was a sole source supplier or otherwise was in a superior bargaining position and thus the price of the contract would not have been modified even if accurate, complete, and current cost or pricing data had been submitted;

(ii) The Contracting Officer should have known that the cost or pricing data in issue were defective even though the Contractor or subcontractor took no affirmative action to bring the character of the data to the attention of the Contracting Officer;

(iii) The contract was based on an agreement about the total cost of the contract and there was no agreement about the cost of each item procured under the contract; or

(iv) The Contractor or subcontractor did not submit a Certificate of Current Cost or Pricing Data.

(2) Except as prohibited by subdivision (d)(2)(ii) of this clause:

(i) an offset in an amount determined appropriate by the Contracting Officer based upon the facts shall be allowed against the amount of a contract price reduction if:

(A) The Contractor certifies to the Contracting Officer that, to the best of the Contractor's knowledge and belief, the Contractor is entitled to the offset in the amount requested; and

(B) The Contractor proves that the cost or pricing data were available before the date of agreement on the price of the contract (or price of the modification) and that the data were not submitted before such date.

(ii) An offset shall not be allowed if:

(A) The understated data was known by the Contractor to be understated when the Certificate of Current Cost or Pricing Data was signed; or (B) The Government proves that the facts demonstrate that the contract price would not have increased in the amount to be offset even if the available data had been submitted before the date of agreement on price.

(e) If any reduction in the contract price under this clause reduces the price of items for which payment was made prior to the date of the modification reflecting the price reduction, the Contractor shall be liable to and shall pay the United States at the time such overpayment is repaid:

(1) Simple interest on the amount of such overpayment to be computed from the date(s) of overpayment to the Contractor to the date the Government is repaid by the Contractor at the applicable underpayment rate effective for each quarter prescribed by the Secretary of the Treasury under 26 U.S.C. 6621(a)(2); and

(2) A penalty equal to the amount of the overpayment, if the Contractor or subcontractor knowingly submitted cost or pricing data which were incomplete, inaccurate, or noncurrent.

(End of clause)

52.214-28 SUBCONTRACTOR COST OR PRICING DATA - MODIFICATIONS - SEALED BIDDING (OCT 1997)

(a) The requirements of paragraphs (b) and (c) of this clause shall:

(1) become operative only for any modification to this contract involving aggregate increases and/or decreases in costs, plus applicable profits, expected to exceed the threshold for submission of cost or pricing data at (FAR) 48 CFR 15.403-4(a)(1); and

(2) be limited to such modifications.

(b) Before awarding any subcontract expected to exceed the threshold for submission of cost or pricing data at FAR 15.403-4(a)(1), on the date of agreement on price or the date of award, whichever is later; or before pricing any subcontract modifications involving aggregate increases and/or decreases in costs, plus applicable profits, expected to exceed the threshold for submission of cost or pricing data at FAR 15.403-4(a)(1), the Contractor shall require the subcontractor to

submit cost or pricing data (actually or by specific identification in writing), unless an exception under FAR 15.403-1(b) applies.

(1) Based on adequate price competition;

(2) Based on established catalog or market prices of commercial items sold in substantial quantities to the general public; or

(3) Set by law or regulation.

(c) The Contractor shall require the subcontractor to certify in substantially the form prescribed in subsection 15.406-2 of the Federal Acquisition Regulation that, to the best of its knowledge and belief, the data submitted under paragraph (b) above were accurate, complete, and current as of the date of agreement on the negotiated price of the subcontract or subcontract modification.

(d) The Contractor shall insert the substance of this clause, including this paragraph (d), in each subcontract that, when entered into, exceeds the threshold for submission of cost or pricing data at FAR 15.403-4(a)(1).

(End of clause)

52.215-19 NOTIFICATION OF OWNERSHIP CHANGES (OCT 1997)

(a) The Contractor shall make the following notifications in writing:

(1) When the Contractor becomes aware that a change in its ownership has occurred, or is certain to occur, that could result in changes in the valuation of its capitalized assets in the accounting records, the Contractor shall notify the Administrative Contracting Officer (ACO) within 30 days.

(2) The Contractor shall also notify the ACO within 30 days whenever changes to asset valuations or any other cost changes have occurred or are certain to occur as a result of a change in ownership.

(b) The Contractor shall--

(1) Maintain current, accurate, and complete inventory records of assets and their costs;

(2) Provide the ACO or designated representative ready access to the records upon request;

(3) Ensure that all individual and grouped assets, their capitalized values, accumulated depreciation or amortization, and remaining useful lives are identified accurately before and after each of the Contractor's ownership changes; and

(4) Retain and continue to maintain depreciation and amortization schedules based on the asset records maintained before each Contractor ownership change.

The Contractor shall include the substance of this clause in all subcontracts under this contract that meet the applicability

requirement of FAR 15.408(k).

(End of clause)

52.219-8 UTILIZATION OF SMALL BUSINESS CONCERNS (OCT 2000)

(a) It is the policy of the United States that small business concerns, veteran-owned small business concerns, service-disabled veteran-owned small business concerns, HUBZone small business concerns, small disadvantaged business concerns, and women-owned small business concerns shall have the maximum practicable opportunity to participate in performing contracts let by any Federal agency, including contracts and subcontracts for subsystems, assemblies, components, and related services for major systems. It is further the policy of the United States that its prime contractors establish procedures to ensure the timely payment of amounts due pursuant to the terms of their subcontracts with small business concerns, veteran-owned small business concerns, service-disabled veteran-owned small business concerns, HUBZone small business concerns, small disadvantaged business concerns, and women-owned small business concerns.

(b) The Contractor hereby agrees to carry out this policy in the awarding of subcontracts to the fullest extent consistent with efficient contract performance. The Contractor further agrees to cooperate in any studies or surveys as may be conducted by the United States Small Business Administration or the awarding agency of the United States as may be necessary to determine the extent of the Contractor's compliance with this clause.

Definitions. As used in this contract--

HUBZone small business concern means a small business concern that appears on the List of Qualified HUBZone Small Business Concerns maintained by the Small Business Administration.

Service-disabled veteran-owned small business concern--

(1) Means a small business concern--

(i) Not less than 51 percent of which is owned by one or more service-disabled veterans or, in the case of any publicly owned business, not less than 51 percent of the stock of which is owned by one or more service-disabled veterans; and

(ii) The management and daily business operations of which are controlled by one or more service-disabled veterans or, in the case of a veteran with permanent and severe disability, the spouse or permanent caregiver of such veteran.

(2) Service-disabled veteran means a veteran, as defined in 38 U.S.C. 101(2), with a disability that is service-connected, as defined in 38 U.S.C. 101(16).

Small business concern means a small business as defined pursuant to Section 3 of the Small Business Act and relevant regulations promulgated pursuant thereto.

Small disadvantaged business concern means a small business concern that represents, as part of its offer that--

(1) It has received certification as a small disadvantaged business concern consistent with 13 CFR part 124, subpart B;

(2) No material change in disadvantaged ownership and control has occurred since its certification;

(3) Where the concern is owned by one or more individuals, the net worth of each individual upon whom the certification is based does not exceed $750,000 after taking into account the applicable exclusions set forth at 13 CFR 124.104(c)(2); and

(4) It is identified, on the date of its representation, as a certified small disadvantaged business in the database maintained by the Small Business Administration (PRO-Net).

Veteran-owned small business concern means a small business concern--

(1) Not less than 51 percent of which is owned by one or more veterans (as defined at 38 U.S.C. 101(2)) or, in the case of any publicly owned business, not less than 51 percent of the stock of which is owned by one or more veterans; and

(2) The management and daily business operations of which are controlled by one or more veterans.

Women-owned small business concern means a small business concern--

(1) That is at least 51 percent owned by one or more women, or, in the case of any publicly owned business, at least 51 percent of the stock of which is owned by one or more women; and

(2) Whose management and daily business operations are controlled by one or more women.

(d) Contractors acting in good faith may rely on written representations by their subcontractors regarding their status as a small business concern, a veteran-owned small business concern, a service-disabled veteran-owned small business concern, a HUBZone small business concern, a small disadvantaged business concern, or a women-owned small business concern.

(End of clause)

52.219-9 SMALL BUSINESS SUBCONTRACTING PLAN (OCT 2000)

(a) This clause does not apply to small business concerns.

(b) Definitions. As used in this clause--

Commercial item means a product or service that satisfies the definition of commercial item in section 2.101 of the Federal Acquisition Regulation.

Commercial plan means a subcontracting plan (including goals) that covers the offeror's fiscal year and that applies to the entire production of commercial items sold by either the entire company or a portion thereof (e.g., division, plant, or product line).

Individual contract plan means a subcontracting plan that covers the entire contract period (including option periods), applies to a specific contract, and has goals that are based on the offeror's planned subcontracting in support of the specific contract, except that indirect costs incurred for common or joint purposes may be allocated on a prorated basis to the contract.

Master plan means a subcontracting plan that contains all the required elements of an individual contract plan, except goals, and may be incorporated into individual contract plans, provided the master plan has been approved.

Subcontract means any agreement (other than one involving an employer-employee relationship) entered into by a Federal Government prime Contractor or subcontractor calling for supplies or services required for performance of the contract or subcontract.

(c) The offeror, upon request by the Contracting Officer, shall submit and negotiate a subcontracting plan, where applicable, that separately addresses subcontracting with small business, veteran-owned small business, HUBZone small business concerns, small disadvantaged business, and women-owned small business concerns. If the offeror is submitting an individual contract plan, the plan must separately address subcontracting with small business, veteran-owned small business, HUBZone small business, small disadvantaged business, and women-owned small business concerns, with a separate part for the basic contract and separate parts for each option (if any). The plan shall be included in and made a part of the resultant contract. The subcontracting plan shall be negotiated within the time specified by the Contracting Officer. Failure to submit and negotiate the subcontracting plan shall make the offeror ineligible for award of a contract.

(d) The offeror's subcontracting plan shall include the following:

(1) Goals, expressed in terms of percentages of total planned subcontracting dollars, for the use of small business, veteran-owned small business, HUBZone small business, small disadvantaged business, and women-owned small business concerns as subcontractors. The offeror shall include all subcontracts that contribute to contract performance, and may include a proportionate share of products and services that are normally allocated as indirect costs.

(2) A statement of--

(i) Total dollars planned to be subcontracted for an individual contract plan; or the offeror's total projected sales, expressed in dollars, and the total value of projected subcontracts to support the sales for a commercial plan;

(ii) Total dollars planned to be subcontracted to small business concerns;

(iii) Total dollars planned to be subcontracted to veteran-owned small business concerns;

(iv) Total dollars planned to be subcontracted to HUBZone small business concerns;

(v) Total dollars planned to be subcontracted to small disadvantaged business concerns; and

(vi) Total dollars planned to be subcontracted to women-owned small business concerns.

(3) A description of the principal types of supplies and services to be subcontracted, and an identification of the types planned for subcontracting to--

(i) Small business concerns;

(ii) Veteran-owned small business concerns;

(iii) HUBZone small business concerns;

(iv) Small disadvantaged business concerns; and

(v) Women-owned small business concerns.

(4) A description of the method used to develop the subcontracting goals in paragraph (d)(1) of this clause.

(5) A description of the method used to identify potential sources for solicitation purposes (e.g., existing company source lists, the Procurement Marketing and Access Network (PRO-Net) of the Small Business Administration (SBA), veterans service organizations, the National Minority Purchasing Council Vendor Information Service, the Research and Information Division of the Minority Business Development Agency in the Department of Commerce, or small, HUBZone, small disadvantaged, and women-owned small business trade associations). A firm may rely on the information contained in PRO-Net as an accurate representation of a concern's size and ownership characteristics for the purposes of maintaining a small, veteran-owned small, HUBZone small, small disadvantaged, and women-owned small business source list. Use of PRO-Net as its source list does not relieve a firm of its responsibilities (e.g., outreach, assistance, counseling, or publicizing subcontracting opportunities) in this clause.

(6) A statement as to whether or not the offeror in included indirect costs in establishing subcontracting goals, and a description of the method used to determine the proportionate share of indirect costs to be incurred with—

(i) Small business concerns;

(ii) Veteran-owned small business concerns;

(iii) HUBZone small business concerns;

(iv) Small disadvantaged business concerns; and

(v) Women-owned small business concerns.

(7) The name of the individual employed by the offeror who will administer the offeror's subcontracting program, and a description of the duties of the individual.

(8) A description of the efforts the offeror will make to assure that small business, veteran-owned small business, HUBZone small business, small disadvantaged business and women-owned small business concerns have an equitable opportunity to compete for subcontracts.

(9) Assurances that the offeror will include the clause of this contract entitled ``Utilization of Small Business Concerns'' in all subcontracts that offer further subcontracting opportunities, and that the offeror will require all subcontractors (except small business concerns) that receive subcontracts in excess of $500,000 ($1,000,000 for construction of any public facility) to adopt a subcontracting plan that complies with the requirements of this clause.

(10) Assurances that the offeror will--

(i) Cooperate in any studies or surveys as may be required;

(ii) Submit periodic reports so that the Government can determine the extent of compliance by the offeror with the subcontracting plan;

(iii) Submit Standard Form (SF) 294, Subcontracting Report for Individual Contracts, and/or SF 295, Summary Subcontract Report, in accordance with paragraph (j) of this clause. The reports shall provide information on subcontract awards to small business concerns, veteran-owned small business concerns, service-disabled veteran-owned small business concerns, small disadvantaged business concerns, women-owned small business concerns, and Historically Black Colleges and Universities and Minority Institutions. Reporting shall be in accordance with the instructions on the forms or as provided in agency regulations.

(iv) Ensure that its subcontractors agree to submit SF 294 and SF 295.

(11) A description of the types of records that will be maintained concerning procedures that have been adopted to comply with the requirements and goals in the plan, including establishing source lists; and a description of the offeror's efforts to locate small business, veteran-owned small business, HUBZone small business, small disadvantaged business, and women-owned small business concerns and award subcontracts to them. The records shall include at least the following (on a plant-wide or company-wide basis, unless otherwise indicated).

(i) Source lists (e.g., PRO-Net), guides, and other data that identify small business, veteran-owner small business, HUBZone small business, small disadvantaged business, and women-owned small business concerns.

(ii) Organizations contacted in an attempt to locate sources that are small business, veteran-owned small business, HUBZone small business, small disadvantaged business, or women-owned small business concerns.

(iii) Records on each subcontract solicitation resulting in an award of more than $100,000, indicating--

(A) Whether small business concerns were solicited and, if not, why not;

(B) Whether veteran-owned small business concerns were solicited and, if not, why not;

(C) Whether HUBZone small business concerns were solicited and, if not, why not;

(D) Whether small disadvantaged business concerns were solicited and, if not, why not;

(E) Whether women-owned small business concerns were solicited and, if not, why not; and

(F) If applicable, the reason award was not made to a small business concern.

(iv) Records of any outreach efforts to contact--

(A) Trade associations;

(B) Business development organizations;

(C) Conferences and trade fairs to locate small, HUBZone small, small disadvantaged, and women-owned small business sources; and

(D) Veterans service organizations.

(v) Records of internal guidance and encouragement provided to buyers through--

(A) Workshops, seminars, training, etc.; and

(B) Monitoring performance to evaluate compliance with the program's requirements.

(vi) On a contract-by-contract basis, records to support award data submitted by the offeror to the Government, including the name, address, and business size of each subcontractor. Contractors having commercial plans need not comply with this requirement.

(e) In order to effectively implement this plan to the extent consistent with efficient contract performance, the Contractor shall perform the following functions:

(1) Assist small business, veteran-owner small business, HUBZone small business, small disadvantaged business, and women-owned small business concerns by arranging solicitations, time for the preparation of bids, quantities, specifications, and delivery schedules so as to facilitate

the participation by such concerns. Where the Contractor's lists of potential small business, veteran-owner small business, HUBZone small business, small disadvantaged business, and women-owned small business subcontractors are excessively long, reasonable effort shall be made to give all such small business concerns an opportunity to compete over a period of time.

(2) Provide adequate and timely consideration of the potentialities of small business, veteran-owner small business, HUBZone small business, small disadvantaged business, and women-owned small business concerns in all "make-or-buy" decisions.

(3) Counsel and discuss subcontracting opportunities with representatives of small business, veteran-owner small business, HUBZone small business, small disadvantaged business, and women-owned small business firms.

(4) Provide notice to subcontractors concerning penalties and remedies for misrepresentations of business status as small, veteran-owner small business, HUBZone small, small disadvantaged, or women-owned small business for the purpose of obtaining a subcontract that is to be included as part or all of a goal contained in the Contractor's subcontracting plan.

(f) A master plan on a plant or division-wide basis that contains all the elements required by paragraph (d) of this clause, except goals, may be incorporated by reference as a part of the subcontracting plan required of the offeror by this clause; provided--(1) the master plan has been approved, (2) the offeror ensures that the master plan is updated as necessary and provides copies of the approved master plan, including evidence of its approval, to the Contracting Officer, and (3) goals and any deviations from the master plan deemed necessary by the Contracting Officer to satisfy the requirements of this contract are set forth in the individual subcontracting plan.

(g) A commercial plan is the preferred type of subcontracting plan for contractors furnishing commercial items. The commercial plan shall relate to the offeror's planned subcontracting generally, for both commercial and Government business, rather than solely to the Government contract. Commercial plans are also preferred for subcontractors that provide commercial items under a prime contract, whether or not the prime contractor is supplying a commercial item.

(h) Prior compliance of the offeror with other such subcontracting plans under previous contracts will be considered by the Contracting Officer in determining the responsibility of the offeror for award of the contract.

(i) The failure of the Contractor or subcontractor to comply in good faith with (1) the clause of this contract entitled "Utilization of Small Business Concerns," or (2) an approved plan required by this clause, shall be a material breach of the contract.

(j) The Contractor shall submit the following reports:

(1) Standard Form 294, Subcontracting Report for Individual Contracts. This report shall be submitted to the Contracting Officer semiannually

and at contract completion. The report covers subcontract award data related to this contract. This report is not required for commercial plans.

(2) Standard Form 295, Summary Subcontract Report. This report encompasses all of the contracts with the awarding agency. It must be submitted semi-annually for contracts with the Department of Defense and annually for contracts with civilian agencies. If the reporting activity is covered by a commercial plan, the reporting activity must report annually all subcontract awards under that plan. All reports submitted at the close of each fiscal year (both individual and commercial plans) shall include a breakout, in the Contractor's format, of subcontract awards, in whole dollars, to small disadvantaged business concerns by North American Industry Classification System (NAICS) Industry Subsector. For a commercial plan, the Contractor may obtain from each of its subcontractors a predominant NAICS Industry Subsector and report all awards to that subcontractor under its predominant NAICS Industry Subsector.

(End of clause)

52.222-3 CONVICT LABOR (Aug 1996)

The Contractor agrees not to employ in the performance of this contract any person undergoing a sentence of imprisonment which has been imposed by any court of a State, the District of Columbia, the Commonwealth of Puerto Rico, the Virgin Islands, Guam, American Samoa, the Commonwealth of the Northern Mariana Islands, or the Trust Territory of the Pacific Islands. This limitation, however, shall not prohibit the employment by the Contractor in the performance of this contract of persons on parole or probation to work at paid employment during the term of their sentence or persons who have been pardoned or who have served their terms. Nor shall it prohibit the employment by the Contractor in the performance of this contract of persons confined for violation of the laws of any of the States, the District of Columbia, the Commonwealth of Puerto Rico, the Virgin Islands, Guam, American Samoa, the Commonwealth of the Northern Mariana Islands, or the Trust Territory of the Pacific Islands who are authorized to work at paid employment in the community under the laws of such jurisdiction, if--

(a)(1) The worker is paid or is in an approved work training program on a voluntary basis;

(2) Representatives of local union central bodies or similar labor union organizations have been consulted;

(3) Such paid employment will not result in the displacement of employed workers, or be applied in skills, crafts, or trades in which there is a surplus of available gainful labor in the locality, or impair existing contracts for services; and

(4) The rates of pay and other conditions of employment will not be less than those paid or provided for work of a similar nature in the locality in which the work is being performed; and

(b) The Attorney General of the United States has certified that the work-release laws or regulations of the jurisdiction involved are in

conformity with the requirements of Executive Order 11755, as amended by Executive Orders 12608 and 12943.

(End of clause)

52.222-4 CONTRACT WORK HOURS AND SAFETY STANDARDS ACT - OVERTIME COMPENSATION (SEP 2000)

(a) Overtime requirements. No Contractor or subcontractor employing laborers or mechanics (see Federal Acquisition Regulation 22.300) shall require or permit them to work over 40 hours in any workweek unless they are paid at least 1 and 1/2 times the basic rate of pay for each hour worked over 40 hours.

(b) Violation; liability for unpaid wages; liquidated damages. The responsible Contractor and subcontractor are liable for unpaid wages if they violate the terms in paragraph (a) of this clause. In addition, the Contractor and subcontractor are liable for liquidated damages payable to the Government. The Contracting Officer will assess liquidated damages at the rate of $10 per affected employee for each calendar day on which the employer required or permitted the employee to work in excess of the standard workweek of 40 hours without paying overtime wages required by the Contract Work Hours and Safety Standards Act.

(c) Withholding for unpaid wages and liquidated damages. The Contracting Officer will withhold from payments due under the contract sufficient funds required to satisfy any Contractor or subcontractor liabilities for unpaid wages and liquidated damages. If amounts withheld under the contract are insufficient to satisfy Contractor or subcontractor liabilities, the Contracting Officer will withhold payments from other Federal or Federally assisted contracts held by the same Contractor that are subject to the Contract Work Hours and Safety Standards Act.

(d) Payrolls and basic records.

(1) The Contractor and its subcontractors shall maintain payrolls and basic payroll records for all laborers and mechanics working on the contract during the contract and shall make them available to the Government until 3 years after contract completion. The records shall contain the name and address of each employee, social security number, labor classifications, hourly rates of wages paid, daily and weekly number of hours worked, deductions made, and actual wages paid. The records need not duplicate those required for construction work by Department of Labor regulations at 29 CFR 5.5(a)(3) implementing the Davis-Bacon Act.

(2) The Contractor and its subcontractors shall allow authorized representatives of the Contracting Officer or the Department of Labor to inspect, copy, or transcribe records maintained under paragraph (d)(1) of this clause. The Contractor or subcontractor also shall allow authorized representatives of the Contracting Officer or Department of Labor to interview employees in the workplace during working hours.

(e) Subcontracts. The Contractor shall insert the provisions set forth in paragraphs (a) through (d) of this clause in subcontracts exceeding $100,000 and require subcontractors to include these provisions in any lower tier subcontracts. The Contractor shall be responsible for compliance by any subcontractor or lower-tier subcontractor with the provisions set forth in paragraphs (a) through (d) of this clause.

(End of clause)

52.222-6 DAVIS-BACON ACT (FEB 1995)

(a) All laborers and mechanics employed or working upon the site of the work will be paid unconditionally and not less often than once a week, and without subsequent deduction or rebate on any account (except such payroll deductions as are permitted by regulations issued by the Secretary of Labor under the Copeland Act (29 CFR Part 3), the full amount of wages and bona fide fringe benefits (or cash equivalents thereof) due at time of payment computed at rates not less than those contained in the wage determination of the Secretary of Labor which is attached hereto and made a part hereof, regardless of any contractual relationship which may be alleged to exist between the Contractor and such laborers and mechanics. Contributions made or costs reasonably anticipated for bona fide fringe benefits under section 1(b)(2) of the Davis-Bacon Act on behalf of laborers or mechanics are considered wages paid to such laborers or mechanics, subject to the provisions of paragraph (d) of this clause; also, regular contributions made or costs incurred for more than a weekly period (but not less often than quarterly) under plans, funds, or programs which cover the particular weekly period, are deemed to be constructively made or incurred during such period. Such laborers and mechanics shall be paid not less than the appropriate wage rate and fringe benefits in the wage determination for the classification of work actually performed, without regard to skill, except as provided in the clause entitled Apprentices and Trainees. Laborers or mechanics performing work in more than one classification may be compensated at the rate specified for each classification for the time actually worked therein; provided, That the employer's payroll records accurately set forth the time spent in each classification in which work is performed. The wage determination (including any additional classifications and wage rates conformed under paragraph (b) of this clause) and the Davis-Bacon poster (WH-1321) shall be posted at all times by the Contractor and its subcontractors at the site of the work in a prominent and accessible place where it can be easily seen by the workers.

(b)(1) The Contracting Officer shall require that any class of laborers or mechanics which is not listed in the wage determination and which is to be employed under the contract shall be classified in conformance with the wage determination. The Contracting Officer shall approve an additional classification and wage rate and fringe benefits therefore only when all the following criteria have been met:

(i) The work to be performed by the classification requested is not performed by a classification in the wage determination.

(ii) The classification is utilized in the area by the construction industry.

(iii) The proposed wage rate, including any bona fide fringe benefits, bears a reasonable relationship to the wage rates contained in the wage determination.

(2) If the Contractor and the laborers and mechanics to be employed in the classification (if known), or their representatives, and the Contracting Officer agree on the classification and wage rate (including the amount designated for fringe benefits, where appropriate), a report of the action taken shall be sent by the Contracting Officer to the Administrator of the Wage and Hour Division, Employment Standards Administration, U.S. Department of Labor, Washington, DC 20210. The Administrator or an authorized representative will approve, modify, or disapprove every additional classification action within 30 days of receipt and so advise the Contracting Officer or will notify the Contracting Officer within the 30-day period that additional time is necessary.

(3) In the event the Contractor, the laborers or mechanics to be employed in the classification, or their representatives, and the Contracting Officer do not agree on the proposed classification and wage rate (including the amount designated for fringe benefits, where appropriate), the Contracting Officer shall refer the questions, including the views of all interested parties and the recommendation of the Contracting Officer, to the Administrator of the Wage and Hour Division for determination. The Administrator, or an authorized representative, will issue a determination within 30 days of receipt and so advise the Contracting Officer or will notify the Contracting Officer within the 30-day period that additional time is necessary.

(4) The wage rate (including fringe benefits, where appropriate) determined pursuant to subparagraphs (b)(2) and (b)(3) of this clause shall be paid to all workers performing work in the classification under this contract from the first day on which work is performed in the classification.

(c) Whenever the minimum wage rate prescribed in the contract for a class of laborers or mechanics includes a fringe benefit which is not expressed as an hourly rate, the Contractor shall either pay the benefit as stated in the wage determination or shall pay another bona fide fringe benefit or an hourly cash equivalent thereof.

If the Contractor does not make payments to a trustee or other third person, the Contractor may consider as part of the wages of any laborer or mechanic the amount of any costs reasonably anticipated in providing bona fide fringe benefits under a plan or program; provided, That the Secretary of Labor has found, upon the written request of the Contractor, that the applicable standards of the Davis-Bacon Act have been met. The Secretary of Labor may require the Contractor to set aside in a separate account assets for the meeting of obligations under the plan or program.

(End of clause)

52.222-7 WITHHOLDING OF FUNDS (FEB 1988)

The Contracting Officer shall, upon his or her own action or upon written request of an authorized representative of the Department of

Labor, withhold or cause to be withheld from the Contractor under this contract or any other Federal contract with the same Prime Contractor, or any other Federally assisted contract subject to Davis-Bacon prevailing wage requirements, which is held by the same Prime Contractor, so much of the accrued payments or advances as may be considered necessary to pay laborers and mechanics, including apprentices, trainees, and helpers, employed by the Contractor or any subcontractor the full amount of wages required by the contract. In the event of failure to pay any laborer or mechanic, including any apprentice, trainee, or helper, employed or working on the site of the work, all or part of the wages required by the contract, the Contracting Officer may, after written notice to the Contractor, take such action as may be necessary to cause the suspension of any further payment, advance, or guarantee of funds until such violations have ceased.

(End of clause)

52.222-8 PAYROLLS AND BASIC RECORDS (FEB 1988)

(a) Payrolls and basic records relating thereto shall be maintained by the Contractor during the course of the work and preserved for a period of 3 years thereafter for all laborers and mechanics working at the site of the work. Such records shall contain the name, address, and social security number of each such worker, his or her correct classification, hourly rates of wages paid (including rates of contributions or costs anticipated for bona fide fringe benefits or cash equivalents thereof of the types described in section 1(b)(2)(B) of the Davis-Bacon Act), daily and weekly number of hours worked, deductions made, and actual wages paid. Whenever the Secretary of Labor has found, under paragraph (d) of the clause entitled Davis-Bacon Act, that the wages of any laborer or mechanic include the amount of any costs reasonably anticipated in providing benefits under a plan or program described in section 1(b)(2)(B) of the Davis-Bacon Act, the Contractor shall maintain records which show that the commitment to provide such benefits is enforceable, that the plan or program is financially responsible, and that the plan or program has been communicated in writing to the laborers or mechanics affected, and records which show the costs anticipated or the actual cost incurred in providing such benefits. Contractors employing apprentices or trainees under approved programs shall maintain written evidence of the registration of apprenticeship programs and certification of trainee programs, the registration of the apprentices and trainees, and the ratios and wage rates prescribed in the applicable programs.

(b)(1) The Contractor shall submit weekly for each week in which any contract work is performed a copy of all payrolls to the Contracting Officer. The payrolls submitted shall set out accurately and completely all of the information required to be maintained under paragraph (a) of this clause. This information may be submitted in any form desired. Optional Form WH-347 (Federal Stock Number 029-005-00014-1) is available for this purpose and may be purchased from the Superintendent of Documents, U.S. Government Printing Office, Washington, DC 20402. The Prime Contractor is responsible for the submission of copies of payrolls by all subcontractors.

(2) Each payroll submitted shall be accompanied by a "Statement of

Compliance," signed by the Contractor or subcontractor or his or her agent who pays or supervises the payment of the persons employed under the contract and shall certify--

(i) That the payroll for the payroll period contains the information required to be maintained under paragraph (a) of this clause and that such information is correct and complete;

(ii) That each laborer or mechanic (including each helper, apprentice, and trainee) employed on the contract during the payroll period has been paid the full weekly wages earned, without rebate, either directly or indirectly, and that no deductions have been made either directly or indirectly from the full wages earned, other than permissible deductions as set forth in the Regulations, 29 CFR Part 3; and

(iii) That each laborer or mechanic has been paid not less than the applicable wage rates and fringe benefits or cash equivalents for the classification of work performed, as specified in the applicable wage determination incorporated into the contract.

(3) The weekly submission of a properly executed certification set forth on the reverse side of Optional Form WH-347 shall satisfy the requirement for submission of the "Statement of Compliance" required by subparagraph (b)(2) of this clause.

(4) The falsification of any of the certifications in this clause may subject the Contractor or subcontractor to civil or criminal prosecution under Section 1001 of Title 18 and Section 3729 of Title 31 of the United States Code.

(c) The Contractor or subcontractor shall make the records required under paragraph (a) of this clause available for inspection, copying, or transcription by the Contracting Officer or authorized representatives of the Contracting Officer or the Department of Labor. The Contractor or subcontractor shall permit the Contracting Officer or representatives of the Contracting Officer or the Department of Labor to interview employees during working hours on the job. If the Contractor or subcontractor fails to submit required records or to make them available, the Contracting Officer may, after written notice to the Contractor, take such action as may be necessary to cause the suspension of any further payment. Furthermore, failure to submit the required records upon request or to make such records available may be grounds for debarment action pursuant to 29 CFR 5.12.

(End of clause)

52.222-9 APPRENTICES AND TRAINEES (FEB 1988)

(a) Apprentices. Apprentices will be permitted to work at less than the predetermined rate for the work they performed when they are employed pursuant to and individually registered in a bona fide apprenticeship program registered with the U.S. Department of Labor, Employment and Training Administration, Bureau of Apprenticeship and Training, or with a State Apprenticeship Agency recognized by the Bureau, or if a person is employed in his or her first 90 days of probationary employment as an apprentice in such an apprenticeship

program, who is not individually registered in the program, but who has been certified by the Bureau of Apprenticeship and Training or a State Apprenticeship Agency (where appropriate) to be eligible for probationary employment as an apprentice. The allowable ratio of apprentices to journeymen on the job site in any craft classification shall not be greater than the ratio permitted to the Contractor as to the entire work force under the registered program. Any worker listed on a payroll at an apprentice wage rate, who is not registered or otherwise employed as stated in this paragraph, shall be paid not less than the applicable wage determination for the classification of work actually performed. In addition, any apprentice performing work on the job site in excess of the ratio permitted under the registered program shall be paid not less than the applicable wage rate on the wage determination for the work actually performed. Where a contractor is performing construction on a project in a locality other than that in which its program is registered, the ratios and wage rates (expressed in percentages of the journeyman's hourly rate) specified in the Contractor's or subcontractor's registered program shall be observed. Every apprentice must be paid at not less than the rate specified in the registered program for the apprentice's level of progress, expressed as a percentage of the journeyman hourly rate specified in the applicable wage determination. Apprentices shall be paid fringe benefits in accordance with the provisions of the apprenticeship program. If the apprenticeship program does not specify fringe benefits, apprentices must be paid the full amount of fringe benefits listed on the wage determination for the applicable classification. If the Administrator determines that a different practice prevails for the applicable apprentice classification, fringes shall be paid in accordance with that determination. In the event the Bureau of Apprenticeship and Training, or a State Apprenticeship Agency recognized by the Bureau, withdraws approval of an apprenticeship program, the Contractor will no longer be permitted to utilize apprentices at less than the applicable predetermined rate for the work performed until an acceptable program is approved.

(b) Trainees. Except as provided in 29 CFR 5.16, trainees will not be permitted to work at less than the predetermined rate for the work performed unless they are employed pursuant to and individually registered in a program which has received prior approval, evidenced by formal certification by the U.S. Department of Labor, Employment and Training Administration. The ratio of trainees to journeymen on the job site shall not be greater than permitted under the plan approved by the Employment and Training Administration. Every trainee must be paid at not less than the rate specified in the approved program for the trainee's level of progress, expressed as a percentage of the journeyman hourly rate specified in the applicable wage determination. Trainees shall be paid fringe benefits in accordance with the provisions of the trainee program. If the trainee program does not mention fringe benefits, trainees shall be paid the full amount of fringe benefits listed in the wage determination unless the Administrator of the Wage and Hour Division determines that there is an apprenticeship program associated with the corresponding journeyman wage rate in the wage determination which provides for less than full fringe benefits for apprentices. Any employee listed on the payroll at a trainee rate who is not registered and participating in a training plan approved by the Employment and Training Administration shall be paid not less than the applicable wage rate in the wage determination

for the classification of work actually performed. In addition, any trainee performing work on the job site in excess of the ratio permitted under the registered program shall be paid not less than the applicable wage rate in the wage determination for the work actually performed. In the event the Employment and Training Administration withdraws approval of a training program, the Contractor will no longer be permitted to utilize trainees at less than the applicable predetermined rate for the work performed until an acceptable program is approved.

(c) Equal employment opportunity. The utilization of apprentices, trainees, and journeymen under this clause shall be in conformity with the equal employment opportunity requirements of Executive Order 11246, as amended, and 29 CFR Part 30.

(End of clause)

52.222-10 COMPLIANCE WITH COPELAND ACT REQUIREMENTS (FEB 1988)

The Contractor shall comply with the requirements of 29 CFR Part 3, which are hereby incorporated by reference in this contract.

(End of clause)

52.222-11 SUBCONTRACTS (LABOR STANDARDS (FEB 1988)

(a) The Contractor or subcontractor shall insert in any subcontracts the clauses entitled Davis-Bacon Act, Contract Work Hours and Safety Standards Act-Overtime Compensation, Apprentices and Trainees, Payrolls and Basic Records, Compliance with Copeland Act Requirements, Withholding of Funds, Subcontracts (Labor Standards), Contract Termination-Debarment, Disputes Concerning Labor Standards, Compliance with Davis-Bacon and Related Act Regulations, and Certification of Eligibility, and such other clauses as the Contracting Officer may, by appropriate instructions, require, and also a clause requiring subcontractors to include these clauses in any lower tier subcontracts. The Prime Contractor shall be responsible for compliance by any subcontractor or lower tier subcontractor with all the contract clauses cited in this paragraph.

(b)(1) Within 14 days after award of the contract, the Contractor shall deliver to the Contracting Officer a completed Statement and Acknowledgment Form (SF 1413) for each subcontract, including the subcontractor's signed and dated acknowledgment that the clauses set forth in paragraph (a) of this clause have been included in the subcontract.

(2) Within 14 days after the award of any subsequently awarded subcontract the Contractor shall deliver to the Contracting Officer an updated completed SF 1413 for such additional subcontract.

(End of clause)

52.222-12 CONTRACT TERMINATION--DEBARMENT (FEB 1988)

A breach of the contract clauses entitled Davis-Bacon Act, Contract Work Hours and Safety Standards Act--Overtime Compensation, Apprentices and Trainees, Payrolls and Basic Records, Compliance with Copeland Act Requirements, Subcontracts (Labor Standards), Compliance with Davis-

Bacon and Related Act Regulations, or Certification of Eligibility may be grounds for termination of the contract, and for debarment as a Contractor and subcontractor as provided in 29 CFR 5.12.

(End of clause)

52.222-13 COMPLIANCE WITH DAVIS-BACON AND RELATED ACT REGULATIONS (FEB 1988)

All rulings and interpretations of the Davis-Bacon and Related Acts contained in 29 CFR Parts 1, 3, and 5 are hereby incorporated by reference in this contract.

(End of clause)

52.222-14 DISPUTES CONCERNING LABOR STANDARDS (FEB 1988)

The United States Department of Labor has set forth in 29 CFR Parts 5, 6, and 7 procedures for resolving disputes concerning labor standards requirements. Such disputes shall be resolved in accordance with those procedures and not the Disputes clause of this contract. Disputes within the meaning of this clause include disputes between the Contractor (or any of its subcontractors) and the contracting agency, the U.S. Department of Labor, or the employees or their representatives.

(End of clause)

52.222-26 EQUAL OPPORTUNITY (APR 2002)

(a) Definition. United States, as used in this clause, means the 50 States, the District of Columbia, Puerto Rico, the Northern Mariana Islands, American Samoa, Guam, the U.S. Virgin Islands, and Wake Island.

(b) If, during any 12-month period (including the 12 months preceding the award of this contract), the Contractor has been or is awarded nonexempt Federal contracts and/or subcontracts that have an aggregate value in excess of $10,000, the Contractor shall comply with paragraphs (b)(1) through (b)(11) of this clause, except for work performed outside the United States by employees who were not recruited within the United States. Upon request, the Contractor shall provide information necessary to determine the applicability of this clause.

(1) The Contractor shall not discriminate against any employee or applicant for employment because of race, color, religion, sex, or national origin. However, it shall not be a violation of this clause for the Contractor to extend a publicly announced preference in employment to Indians living on or near an Indian reservation, in connection with employment opportunities on or near an Indian reservation, as permitted by 41 CFR 60-1.5.

(2) The Contractor shall take affirmative action to ensure that applicants are employed, and that employees are treated during employment, without regard to their race, color, religion, sex, or national origin. This shall include, but not be limited to, (i) employment, (ii) upgrading, (iii) demotion, (iv) transfer, (v) recruitment or recruitment advertising, (vi) layoff or termination, (vii) rates of pay or other forms of compensation, and (viii) selection

for training, including apprenticeship.

(3) The Contractor shall post in conspicuous places available to employees and applicants for employment the notices to be provided by the Contracting Officer that explain this clause.

(4) The Contractor shall, in all solicitations or advertisements for employees placed by or on behalf of the Contractor, state that all qualified applicants will receive consideration for employment without regard to race, color, religion, sex, or national origin.

(5) The Contractor shall send, to each labor union or representative of workers with which it has a collective bargaining agreement or other contract or understanding, the notice to be provided by the Contracting Officer advising the labor union or workers' representative of the Contractor's commitments under this clause, and post copies of the notice in conspicuous places available to employees and applicants for employment.

(6) The Contractor shall comply with Executive Order 11246, as amended, and the rules, regulations, and orders of the Secretary of Labor.

(7) The Contractor shall furnish to the contracting agency all information required by Executive Order 11246, as amended, and by the rules, regulations, and orders of the Secretary of Labor. The Contractor shall also file Standard Form 100 (EEO-1), or any successor form, as prescribed in 41 CFR part 60-1. Unless the Contractor has filed within the 12 months preceding the date of contract award, the Contractor shall, within 30 days after contract award, apply to either the regional Office of Federal Contract Compliance Programs (OFCCP) or the local office of the Equal Employment Opportunity Commission for the necessary forms.

(8) The Contractor shall permit access to its premises, during normal business hours, by the contracting agency or the OFCCP for the purpose of conducting on-site compliance evaluations and complaint investigations. The Contractor shall permit the Government to inspect and copy any books, accounts, records (including computerized records), and other material that may be relevant to the matter under investigation and pertinent to compliance with Executive Order 11246, as amended, and rules and regulations that implement the Executive Order.

(9) If the OFCCP determines that the Contractor is not in compliance with this clause or any rule, regulation, or order of the Secretary of Labor, this contract may be canceled, terminated, or suspended in whole or in part and the Contractor may be declared ineligible for further Government contracts, under the procedures authorized in Executive Order 11246, as amended. In addition, sanctions may be imposed and remedies invoked against the Contractor as provided in Executive Order 11246, as amended; in the rules, regulations, and orders of the Secretary of Labor; or as otherwise provided by law.

(10) The Contractor shall include the terms and conditions of subparagraphs (b)(1) through (11) of this clause in every subcontract or purchase order that is not exempted by the rules, regulations, or

orders of the Secretary of Labor issued under Executive Order 11246, as amended, so that these terms and conditions will be binding upon each subcontractor or vendor.

(11) The Contractor shall take such action with respect to any subcontract or purchase order as the contracting officer may direct as a means of enforcing these terms and conditions, including sanctions for noncompliance; provided, that if the Contractor becomes involved in, or is threatened with, litigation with a subcontractor or vendor as a result of any direction, the Contractor may request the United States to enter into the litigation to protect the interests of the United States.

(c) Notwithstanding any other clause in this contract, disputes relative to this clause will be governed by the procedures in 41 CFR 60-1.1.

(End of clause)

52.222-27 AFFIRMATIVE ACTION COMPLIANCE REQUIREMENTS FOR CONSTRUCTION (FEB 1999)

(a) Definitions. "Covered area," as used in this clause, means the geographical area described in the solicitation for this contract.

"Deputy Assistant Secretary," as used in this clause, means Deputy Assistant Secretary for Federal Contract Compliance, U.S. Department of Labor, or a designee.

"Employer's identification number," as used in this clause, means the Federal Social Security number used on the employer's quarterly federal tax return, U.S. Treasury Department Form 941.

"Minority," as used in this clause, means--

(1) American Indian or Alaskan Native (all persons having origins in any of the original peoples of North America and maintaining identifiable tribal affiliations through membership and participation or community identification).

(2) Asian and Pacific Islander (all persons having origins in any of the original peoples of the Far East, Southeast Asia, the Indian Subcontinent, or the Pacific Islands);

(3) Black (all persons having origins in any of the black African racial groups not of Hispanic origin); and

(4) Hispanic (all persons of Mexican, Puerto Rican, Cuban, Central or South American, or other Spanish culture or origin, regardless of race).

(b) If the Contractor, or a subcontractor at any tier, subcontracts a portion of the work involving any construction trade, each such subcontract in excess of $10,000 shall include this clause and the Notice containing the goals for minority and female participation stated in the solicitation for this contract.

(c) If the Contractor is participating in a Hometown Plan (41 CFR 60-4) approved by the U.S. Department of Labor in a covered area, either individually or through an association, its affirmative action obligations on all work in the plan area (including goals) shall comply with the plan for those trades that have unions participating in the plan. Contractors must be able to demonstrate participation in, and compliance with, the provisions of the plan. Each Contractor or subcontractor participating in an approved plan is also required to comply with its obligations under the Equal Opportunity clause, and to make a good faith effort to achieve each goal under the plan in each trade in which it has employees. The overall good-faith performance by other Contractors or subcontractors toward a goal in an approved plan does not excuse any Contractor's or subcontractor's failure to make good-faith efforts to achieve the plan's goals.

(d) The Contractor shall implement the affirmative action procedures in subparagraphs (g)(1) through (16) of this clause. The goals stated in the solicitation for this contract are expressed as percentages of the total hours of employment and training of minority and female utilization that the Contractor should reasonably be able to achieve in each construction trade in which it has employees in the covered area. If the Contractor performs construction work in a geographical area located outside of the covered area, it shall apply the goals established for the geographical area where that work is actually performed. The Contractor is expected to make substantially uniform progress toward its goals in each craft.

(e) Neither the terms and conditions of any collective bargaining agreement, nor the failure by a union with which the Contractor has a collective bargaining agreement, to refer minorities or women shall excuse the Contractor's obligations under this clause, Executive Order 11246, as amended, or the regulations thereunder.

(f) In order for the nonworking training hours of apprentices and trainees to be counted in meeting the goals, apprentices and trainees must be employed by the Contractor during the training period, and the Contractor must have made a commitment to employ the apprentices and trainees at the completion of their training, subject to the availability of employment opportunities. Trainees must be trained pursuant to training programs approved by the U.S. Department of Labor.

(g) The Contractor shall take affirmative action to ensure equal employment opportunity. The evaluation of the Contractor's compliance with this clause shall be based upon its effort to achieve maximum results from its actions. The Contractor shall document these efforts fully and implement affirmative action steps at least as extensive as the following:

(1) Ensure a working environment free of harassment, intimidation, and coercion at all sites and in all facilities where the Contractor's employees are assigned to work. The Contractor, if possible, will assign two or more women to each construction project. The Contractor shall ensure that foremen, superintendents, and other onsite supervisory personnel are aware of and carry out the Contractor's obligation to maintain such a working environment, with specific attention to minority or female individuals working at these sites or facilities.

(2) Establish and maintain a current list of sources for minority and female recruitment. Provide written notification to minority and female recruitment sources and community organizations when the Contractor or its unions have employment opportunities available, and maintain a record of the organizations' responses.

(3) Establish and maintain a current file of the names, addresses, and telephone numbers of each minority and female off-the-street applicant, referrals of minorities or females from unions, recruitment sources, or community organizations, and the action taken with respect to each individual. If an individual was sent to the union hiring hall for referral and not referred back to the Contractor by the union or, if referred back, not employed by the Contractor, this shall be documented in the file, along with whatever additional actions the Contractor may have taken.

(4) Immediately notify the Deputy Assistant Secretary when the union or unions with which the Contractor has a collective bargaining agreement has not referred back to the Contractor a minority or woman sent by the Contractor, or when the Contractor has other information that the union referral process has impeded the Contractor's efforts to meet its obligations.

(5) Develop on-the-job training opportunities and/or participate in training programs for the area that expressly include minorities and women, including upgrading programs and apprenticeship and trainee programs relevant to the Contractor's employment needs, especially those programs funded or approved by the Department of Labor. The Contractor shall provide notice of these programs to the sources compiled under subparagraph (g)(2) of this clause.

(6) Disseminate the Contractor's equal employment policy by--

(i) Providing notice of the policy to unions and to training, recruitment, and outreach programs, and requesting their cooperation in assisting the Contractor in meeting its contract obligations;

(ii) Including the policy in any policy manual and in collective bargaining agreements;

(iii) Publicizing the policy in the company newspaper, annual report, etc.;

(iv) Reviewing the policy with all management personnel and with all minority and female employees at least once a year; and

(v) Posting the policy on bulletin boards accessible to employees at each location where construction work is performed.

(7) Review, at least annually, the Contractor's equal employment policy and affirmative action obligations with all employees having responsibility for hiring, assignment, layoff, termination, or other employment decisions. Conduct review of this policy with all on-site supervisory personnel before initiating construction work at a job site. A written record shall be made and maintained identifying the time and place of these meetings, persons attending, subject matter

discussed, and disposition of the subject matter.

(8) Disseminate the Contractor's equal employment policy externally by including it in any advertising in the news media, specifically including minority and female news media. Provide written notification to, and discuss this policy with, other Contractors and subcontractors with which the Contractor does or anticipates doing business.

(9) Direct recruitment efforts, both oral and written, to minority, female, and community organizations, to schools with minority and female students, and to minority and female recruitment and training organizations serving the Contractor's recruitment area and employment needs. Not later than 1 month before the date for acceptance of applications for apprenticeship or training by any recruitment source, send written notification to organizations such as the above, describing the openings, screening procedures, and tests to be used in the selection process.

(10) Encourage present minority and female employees to recruit minority persons and women. Where reasonable, provide after-school, summer, and vacation employment to minority and female youth both on the site and in other areas of the Contractor's workforce.

(11) Validate all tests and other selection requirements where required under 41 CFR 60-3.

(12) Conduct, at least annually, an inventory and evaluation at least of all minority and female personnel for promotional opportunities. Encourage these employees to seek or to prepare for, through appropriate training, etc., opportunities for promotion.

(13) Ensure that seniority practices, job classifications, work assignments, and other personnel practices do not have a discriminatory effect by continually monitoring all personnel and employment-related activities to ensure that the Contractor's obligations under this contract are being carried out.

(14) Ensure that all facilities and company activities are nonsegregated except that separate or single-user rest rooms and necessary dressing or sleeping areas shall be provided to assure privacy between the sexes.

(15) Maintain a record of solicitations for subcontracts for minority and female construction contractors and suppliers, including circulation of solicitations to minority and female contractor associations and other business associations.

(16) Conduct a review, at least annually, of all supervisors' adherence to and performance under the Contractor's equal employment policy and affirmative action obligations.

(h) The Contractor is encouraged to participate in voluntary associations that may assist in fulfilling one or more of the affirmative action obligations contained in subparagraphs (g)(1) through (16) of this clause. The efforts of a contractor association, joint contractor-union, contractor-community, or similar group of which the contractor is a member and participant may be asserted as

fulfilling one or more of its obligations under subparagraphs (g)(1) through (16) of this clause, provided the Contractor--

(1) Actively participates in the group;

(2) Makes every effort to ensure that the group has a positive impact on the employment of minorities and women in the industry;

(3) Ensures that concrete benefits of the program are reflected in the Contractor's minority and female workforce participation;

(4) Makes a good-faith effort to meet its individual goals and timetables; and

(5) Can provide access to documentation that demonstrates the effectiveness of actions taken on behalf of the Contractor. The obligation to comply is the Contractor's, and failure of such a group to fulfill an obligation shall not be a defense for the Contractor's noncompliance.

(i) A single goal for minorities and a separate single goal for women shall be established. The Contractor is required to provide equal employment opportunity and to take affirmative action for all minority groups, both male and female, and all women, both minority and nonminority. Consequently, the Contractor may be in violation of Executive Order 11246, as amended, if a particular group is employed in a substantially disparate manner.

(j) The Contractor shall not use goals or affirmative action standards to discriminate against any person because of race, color, religion, sex, or national origin.

(k) The Contractor shall not enter into any subcontract with any person or firm debarred from Government contracts under Executive Order 11246, as amended.

(l) The Contractor shall carry out such sanctions and penalties for violation of this clause and of the Equal Opportunity clause, including suspension, termination, and cancellation of existing subcontracts, as may be imposed or ordered under Executive Order 11246, as amended, and its implementing regulations, by the OFCCP. Any failure to carry out these sanctions and penalties as ordered shall be a violation of this clause and Executive Order 11246, as amended.

(m) The Contractor in fulfilling its obligations under this clause shall implement affirmative action procedures at least as extensive as those prescribed in paragraph (g) of this clause, so as to achieve maximum results from its efforts to ensure equal employment opportunity. If the Contractor fails to comply with the requirements of Executive Order 11246, as amended, the implementing regulations, or this clause, the Deputy Assistant Secretary shall take action as prescribed in 41 CFR 60-4.8.

(n) The Contractor shall designate a responsible official to--

(1) Monitor all employment-related activity to ensure that the Contractor's equal employment policy is being carried out;

(2) Submit reports as may be required by the Government; and

(3) Keep records that shall at least include for each employee the name, address, telephone number, construction trade, union affiliation (if any), employee identification number, social security number, race, sex, status (e.g., mechanic, apprentice, trainee, helper, or laborer), dates of changes in status, hours worked per week in the indicated trade, rate of pay, and locations at which the work was performed. Records shall be maintained in an easily understandable and retrievable form; however, to the degree that existing records satisfy this requirement, separate records are not required to be maintained.

Nothing contained herein shall be construed as a limitation upon the application of other laws that establish different standards of compliance or upon the requirements for the hiring of local or other area residents (e.g., those under the Public Works Employment Act of 1977 and the Community Development Block Grant Program).

(End of clause)

52.222-30 DAVIS-BACON ACT--PRICE ADJUSTMENT (NONE OR SEPARATELY SPECIFIED METHOD) (DEC 2001)

(a) The wage determination issued under the Davis-Bacon Act by the Administrator, Wage and Hour Division, Employment Standards Administration, U.S. Department of Labor, that is effective for an option to extend the term of the contract, will apply to that option period.

(b) The Contracting Officer will make no adjustment in contract price, other than provided for elsewhere in this contract, to cover any increases or decreases in wages and benefits as a result of-- (1) Incorporation of the Department of Labor's wage determination applicable at the exercise of the option to extend the term of the contract;

(2) Incorporation of a wage determination otherwise applied to the contract by operation of law; or

(3) An increase in wages and benefits resulting from any other requirement applicable to workers subject to the Davis-Bacon Act.

(End of clause)

52.222-36 AFFIRMATIVE ACTION FOR WORKERS WITH DISABILITIES (JUN 1998)

(a) General. (1) Regarding any position for which the employee or applicant for employment is qualified, the Contractor shall not discriminate against any employee or applicant because of physical or mental disability. The Contractor agrees to take affirmative action to employ, advance in employment, and otherwise treat qualified individuals with disabilities without discrimination based upon their physical or mental disability in all employment practices such as--

(i) Recruitment, advertising, and job application procedures;

(ii) Hiring, upgrading, promotion, award of tenure, demotion, transfer, layoff, termination, right of return from layoff, and rehiring;

(iii) Rates of pay or any other form of compensation and changes in compensation;

(iv) Job assignments, job classifications, organizational structures, position descriptions, lines of progression, and seniority lists;

(v) Leaves of absence, sick leave, or any other leave;

(vi) Fringe benefits available by virtue of employment, whether or not administered by the Contractor;

(vii) Selection and financial support for training, including apprenticeships, professional meetings, conferences, and other related activities, and selection for leaves of absence to pursue training;

(viii) Activities sponsored by the Contractor, including social or recreational programs; and

(ix) Any other term, condition, or privilege of employment.

(2) The Contractor agrees to comply with the rules, regulations, and relevant orders of the Secretary of Labor (Secretary) issued under the Rehabilitation Act of 1973 (29 U.S.C. 793) (the Act), as amended.

(b) Postings. (1) The Contractor agrees to post employment notices stating--

(i) The Contractor's obligation under the law to take affirmative action to employ and advance in employment qualified individuals with disabilities; and

(ii) The rights of applicants and employees.

(2) These notices shall be posted in conspicuous places that are available to employees and applicants for employment. The Contractor shall ensure that applicants and employees with disabilities are informed of the contents of the notice (e.g., the Contractor may have the notice read to a visually disabled individual, or may lower the posted notice so that it might be read by a person in a wheelchair). The notices shall be in a form prescribed by the Deputy Assistant Secretary for Federal Contract Compliance of the U.S. Department of Labor (Deputy Assistant Secretary) and shall be provided by or through the Contracting Officer.

(3) The Contractor shall notify each labor union or representative of workers with which it has a collective bargaining agreement or other contract understanding, that the Contractor is bound by the terms of Section 503 of the Act and is committed to take affirmative action to employ, and advance in employment, qualified individuals with physical or mental disabilities.

(c) Noncompliance. If the Contractor does not comply with the requirements of this clause, appropriate actions may be taken under the

rules, regulations, and relevant orders of the Secretary issued pursuant to the Act.

(d) Subcontracts. The Contractor shall include the terms of this clause in every subcontract or purchase order in excess of $10,000 unless exempted by rules, regulations, or orders of the Secretary. The Contractor shall act as specified by the Deputy Assistant Secretary to enforce the terms, including action for noncompliance.

(End of clause)

52.222-37 EMPLOYMENT REPORTS ON DISABLED VETERANS AND VETERANS OF THE VIETNAM ERA (JAN 1999)

(a) Unless the Contractor is a State or local government agency, the Contractor shall report at least annually, as required by the Secretary of Labor, on--

(1) The number of disabled veterans and the number of veterans of the Vietnam era in the workforce of the contractor by job category and hiring location; and

(2) The total number of new employees hired during the period covered by the report, and of that total, the number of disabled veterans, and the number of veterans of the Vietnam era.

(b) The above items shall be reported by completing the form entitled "Federal Contractor Veterans' Employment Report VETS-100."

(c) Reports shall be submitted no later than September 30 of each year beginning September 30, 1988.

(d) The employment activity report required by paragraph (a)(2) of this clause shall reflect total hires during the most recent 12-month period as of the ending date selected for the employment profile report required by paragraph (a)(1) of this clause. Contractors may select an ending date: (1) As of the end of any pay period during the period January through March 1st of the year the report is due, or (2) as of December 31, if the contractor has previous written approval from the Equal Employment Opportunity Commission to do so for purposes of submitting the Employer Information Report EEO-1 (Standard Form 100).

(e) The count of veterans reported according to paragraph (a) of this clause shall be based on voluntary disclosure. Each Contractor subject to the reporting requirements at 38 U.S.C. 4212 shall invite all disabled veterans and veterans of the Vietnam era who wish to benefit under the affirmative action program at 38 U.S.C. 4212 to identify themselves to the Contractor. The invitation shall state that the information is voluntarily provided; that the information will be kept confidential; that disclosure or refusal to provide the information will not subject the applicant or employee to any adverse treatment; and that the information will be used only in accordance with the regulations promulgated under 38 U.S.C. 4212.

(f) Subcontracts. The Contractor shall include the terms of this clause in every subcontract or purchase order of $10,000 or more unless exempted by rules, regulations, or orders of the Secretary.

(End of clause)

52.223-5 POLLUTION PREVENTION AND RIGHT-TO-KNOW INFORMATION (APR 1998)

(a) Executive Order 12856 of August 3, 1993, requires Federal facilities to comply with the provisions of the Emergency Planning and Community Right-to-Know Act of 1986 (EPCRA)(42 U.S.C. 11001-11050) and the Pollution Prevention Act of 1990 (PPA)(42 U.S.C. 13101-13109).

(b) The Contractor shall provide all information needed by the Federal facility to comply with the emergency planning reporting requirements of Section 302 of EPCRA; the emergency notice requirements of Section 304 of EPCRA; the list of Material Safety Data Sheets required by Section 311 of EPCRA; the emergency and hazardous chemical inventory forms of Section 312 of EPCRA; the toxic chemical release inventory of Section 313 of EPCRA, which includes the reduction and recycling information required by Section 6607 of PPA; and the toxic chemical reduction goals requirements of Section 3-302 of Executive Order 12856.

(End of clause)

52.223-6 DRUG-FREE WORKPLACE (MAY 2001)

(a) Definitions. As used in this clause --

"Controlled substance" means a controlled substance in schedules I through V of section 202 of the Controlled Substances Act (21 U.S.C. 812) and as further defined in regulation at 21 CFR 1308.11 - 1308.15.

"Conviction" means a finding of guilt (including a plea of nolo contendere) or imposition of sentence, or both, by any judicial body charged with the responsibility to deter- mine violations of the Federal or State criminal drug statutes.

"Criminal drug statute" means a Federal or non-Federal criminal statute involving the manufacture, distribution, dispensing, possession, or use of any controlled substance.

"Drug-free workplace" means the site(s) for the performance of work done by the Contractor in connection with a specific contract at which employees of the Contractor are prohibited from engaging in the unlawful manufacture, distribution, dispensing, possession, or use of a controlled substance.

"Employee" means an employee of a Contractor directly engaged in the performance of work under a Government contract. "Directly engaged" is defined to include all direct cost employees and any other Contractor employee who has other than a minimal impact or involvement in contract performance.

"Individual" means an offeror/contractor that has no more than one employee including the offeror/contractor.

(b) The Contractor, if other than an individual, shall-- within 30 days after award (unless a longer period is agreed to in writing for contracts of 30 days or more performance duration), or as soon as

possible for contracts of less than 30 days performance duration--

(1) Publish a statement notifying its employees that the unlawful manufacture, distribution, dispensing, possession, or use of a controlled substance is prohibited in the Contractor's workplace and specifying the actions that will be taken against employees for violations of such prohibition;

(2) Establish an ongoing drug-free awareness program to inform such employees about--

(i) The dangers of drug abuse in the workplace;

(ii) The Contractor's policy of maintaining a drug-free workplace;

(iii) Any available drug counseling, rehabilitation, and employee assistance programs; and

(iv) The penalties that may be imposed upon employees for drug abuse violations occurring in the workplace;

(3) Provide all employees engaged in performance of the contract with a copy of the statement required by subparagraph (b)(1) of this clause;

(4) Notify such employees in writing in the statement required by subparagraph (b)(1) of this clause that, as a condition of continued employment on this contract, the employee will--

(i) Abide by the terms of the statement; and

(ii) Notify the employer in writing of the employee's conviction under a criminal drug statute for a violation occurring in the workplace no later than 5 days after such conviction.

(5) Notify the Contracting Officer in writing within 10 days after receiving notice under subdivision (b)(4)(ii) of this clause, from an employee or otherwise receiving actual notice of such conviction. The notice shall include the position title of the employee;

(6) Within 30 days after receiving notice under subdivision (b)(4)(ii) of this clause of a conviction, take one of the following actions with respect to any employee who is convicted of a drug abuse violation occurring in the workplace:

(i) Taking appropriate personnel action against such employee, up to and including termination; or

(ii) Require such employee to satisfactorily participate in a drug abuse assistance or rehabilitation program approved for such purposes by a Federal, State, or local health, law enforcement, or other appropriate agency; and

(7) Make a good faith effort to maintain a drug-free workplace through implementation of subparagraphs (b)(1) though (b)(6) of this clause.

(c) The Contractor, if an individual, agrees by award of the contract or acceptance of a purchase order, not to engage in the unlawful

manufacture, distribution, dispensing, possession, or use of a controlled substance while performing this contract.

(d) In addition to other remedies available to the Government, the Contractor's failure to comply with the requirements of paragraph (b) or (c) of this clause may, pursuant to FAR 23.506, render the Contractor subject to suspension of contract payments, termination of the contract for default, and suspension or debarment.

(End of clause)

52.223-14 TOXIC CHEMICAL RELEASE REPORTING (OCT 2000)

(a) Unless otherwise exempt, the Contractor, as owner or operator of a facility used in the performance of this contract, shall file by July 1 for the prior calendar year an annual Toxic Chemical Release Inventory Form (Form R) as described in sections 313(a) and (g) of the Emergency Planning and Community Right-to-Know Act of 1986 (EPCRA) (42 U.S.C. 11023(a) and (g)), and section 6607 of the Pollution Prevention Act of 1990 (PPA) (42 U.S.C. 13106). The Contractor shall file, for each facility subject to the Form R filing and reporting requirements, the annual Form R throughout the life of the contract.

(b) A Contractor owned or operated facility used in the performance of this contract is exempt from the requirement to file an annual Form R if--

(1) The facility does not manufacture, process, or otherwise use any toxic chemicals listed under section 313(c) of EPCRA, 42 U.S.C. 11023(c);

(2) The facility does not have 10 or more full-time employees as specified in section 313(b)(1)(A) of EPCRA, 42 U.S.C. 11023(b)(1)(A);

(3) The facility does not meet the reporting thresholds of toxic chemicals established under of EPCRA, 42 U.S.C. 11023(f) (including the alternate thresholds at 40 CFR 372.27, provided an appropriate certification form has been filed with EPA);

(4) The facility does not fall within Standard Industrial Classification Code (SIC) major groups 20 through 39 or their corresponding North American Industry Classification System (NAICS) sectors 31 through 33; or

(5) The facility is not located within any State of the United States, the District of Columbia, the Commonwealth of Puerto Rico, Guam, American Samoa, the United States Virgin Islands, the Northern Mariana Islands, or any other territory or possession over which the United States has jurisdiction.

(c) If the Contractor has certified to an exemption in accordance with one or more of the criteria in paragraph (b) of this clause, and after award of the contract circumstances change so that any of its owned or operated facilities used in the performance of this contract is no longer exempt--

(1) The Contractor shall notify the Contracting Officer; and

(2) The Contractor, as owner or operator of a facility used in the performance of this contract that is no longer exempt, shall (i) submit a Toxic Chemical Release Inventory Form (Form R) on or before July 1 for the prior calendar year during which the facility becomes eligible; and (ii) continue to file the annual Form R for the life of the contract for such facility.

(d) The Contracting Officer may terminate this contract or take other action as appropriate, if the Contractor fails to comply accurately and fully with the EPCRA and PPA toxic chemical release filing and reporting requirements.

(e) Except for acquisitions of commercial items, as defined in FAR Part 2, the Contractor shall--

(1) For competitive subcontracts expected to exceed $100,000 (including all options), include a solicitation provision substantially the same as the provision at FAR 52.223-13, Certification of Toxic Chemical Release Reporting; and

(2) Include in any resultant subcontract exceeding $100,000 (including all options), the substance of this clause, except this paragraph (e).

(End of clause)

52.225-12 NOTICE OF BUY AMERICAN ACT REQUIREMENT-- CONSTRUCTION MATERIALS UNDER TRADE AGREEMENTS (MAY 2002)

(a) Definitions. Construction material, designated country construction material, domestic construction material, foreign construction material, and NAFTA country construction material, as used in this provision, are defined in the clause of this solicitation entitled "Buy American Act--Construction Materials under Trade Agreements" (Federal Acquisition Regulation (FAR) clause 52.225-11).

(b) Requests for determination of inapplicability. An offeror requesting a determination regarding the inapplicability of the Buy American Act should submit the request to the Contracting Officer in time to allow a determination before submission of offers. The offeror shall include the information and applicable supporting data required by paragraphs (c) and (d) of FAR clause 52.225-11 in the request. If an offeror has not requested a determination regarding the inapplicability of the Buy American Act or Balance of Payments Program before submitting its offer, or has not received a response to a previous request, the offeror shall include the information and supporting data in the offer.

(c) Evaluation of offers. (1) The Government will evaluate an offer requesting exception to the requirements of the Buy American Act, based on claimed unreasonable cost of domestic construction materials, by adding to the offered price the appropriate percentage of the cost of such foreign construction material, as specified in paragraph (b)(4)(i) of FAR clause 52.225-11.

(2) If evaluation results in a tie between an offeror that requested the substitution of foreign construction material based on unreasonable cost and an offeror that did not request an exception, the Contracting Officer will award to the offeror that did not request an exception based on unreasonable cost.

(d) Alternate offers. (1) When an offer includes foreign construction material, other than designated country or NAFTA country construction material, that is not listed by the Government in this solicitation in paragraph (b)(3) of FAR clause 52.225-11, the offeror also may submit an alternate offer based on use of equivalent domestic, designated country, or NAFTA country construction material.

(2) If an alternate offer is submitted, the offeror shall submit a separate Standard Form 1442 for the alternate offer, and a separate price comparison table prepared in accordance with paragraphs (c) and (d) of FAR clause 52.225-11 for the offer that is based on the use of any foreign construction material for which the Government has not yet determined an exception applies.

(3) If the Government determines that a particular exception requested in accordance with paragraph (c) of FAR clause 52.225-11 does not apply, the Government will evaluate only those offers based on use of the equivalent domestic, designated country, or NAFTA country construction material, and the offeror shall be required to furnish such domestic, designated country, or NAFTA country construction material. An offer based on use of the foreign construction material for which an exception was requested--

(i) Will be rejected as nonresponsive if this acquisition is conducted by sealed bidding; or

(ii) May be accepted if revised during negotiations.

(End of provision)

52.225-13 RESTRICTIONS ON CERTAIN FOREIGN PURCHASES (JUL 2000)

(a) The Contractor shall not acquire, for use in the performance of this contract, any supplies or services originating from sources within, or that were located in or transported from or through, countries whose products are banned from importation into the United States under regulations of the Office of Foreign Assets Control, Department of the Treasury. Those countries are Cuba, Iran, Iraq, Libya, North Korea, Sudan, the territory of Afghanistan controlled by the Taliban, and Serbia (excluding the territory of Kosovo).

(b) The Contractor shall not acquire for use in the performance of this contract any supplies or services from entities controlled by the government of Iraq.

(c) The Contractor shall insert this clause, including this paragraph (c), in all subcontracts.

(End of clause)

52.226-1 UTILIZATION OF INDIAN ORGANIZATIONS AND INDIAN-OWNED ECONOMIC ENTERPRISES (JUN 2000)

(a) Definitions. As used in this clause:

"Indian" means any person who is a member of any Indian tribe, band, group, pueblo or community that is recognized by the Federal Government as eligible for services from the Bureau of Indian Affairs (BIA) in accordance with 25 U.S.C. 1452(c) and any "Native" as defined in the Alaska Native Claims Settlement Act (43 U.S.C. 1601).

"Indian organization" means the governing body of any Indian tribe or entity established or recognized by the governing body of an Indian tribe for the purposes of 25 U.S.C., chapter 17.

"Indian-owned economic enterprise" means any Indian-owned (as determined by the Secretary of the Interior) commercial, industrial, or business activity established or organized for the purpose of profit, provided that Indian ownership constitutes not less than 51 percent of the enterprise.

"Indian tribe" means any Indian tribe, band, group, pueblo or community, including native villages and native groups (including corporations organized by Kenai, Juneau, Sitka, and Kodiak) as defined in the Alaska Native Claims Settlement Act, that is recognized by the Federal Government as eligible for services from BIA in accordance with 25 U.S.C. 1542(c).

"Interested party" means a prime contractor or an actual or prospective offeror whose direct economic interest would be affected by the award of a subcontract or by the failure to award a subcontract.

(b) The Contractor shall use its best efforts to give Indian organizations and Indian-owned economic enterprises (25 U.S.C. 1544) the maximum practicable opportunity to participate in the subcontracts it awards to the fullest extent consistent with efficient performance of its contract.

(1) The Contracting Officer and the Contractor, acting in good faith, may rely on the representation of an Indian organization or Indian-owned economic enterprise as to its eligibility, unless an interested party challenges its status or the Contracting Officer has independent reason to question that status. In the event of a challenge to the representation of a subcontractor, the Contracting Officer will refer the matter to the U.S. Department of the Interior, Bureau of Indian Affairs (BIA), Attn: Chief, Division of Contracting and Grants Administration, 1849 C Street, NW, MS 2626-MIB, Washington, DC 20240-4000.

The BIA will determine the eligibility and notify the Contracting Officer. No incentive payment will be made within 50 working days of subcontract award or while a challenge is pending. If a subcontractor is determined to be an ineligible participant, no incentive payment will be made under the Indian Incentive Program.

(2) The Contractor may request an adjustment under the Indian Incentive Program to the following:

(i) The estimated cost of a cost-type contract.

(ii) The target cost of a cost-plus-incentive-fee prime contract.

(iii) The target cost and ceiling price of a fixed-price incentive prime contract.

(iv) The price of a firm-fixed-price prime contract.

(3) The amount of the adjustment to the prime contract is 5 percent of the estimated cost, target cost, or firm-fixed-price included in the subcontract initially awarded to the Indian organization or Indian-owned economic enterprise.

(4) The Contractor has the burden of proving the amount claimed and must assert its request for an adjustment prior to completion of contract performance.

(c) The Contracting Officer, subject to the terms and conditions of the contract and the availability of funds, will authorize an incentive payment of 5 percent of the amount paid to the subcontractor. The Contracting Officer will seek funding in accordance with agency procedures.

(End of clause)

52.227-1 AUTHORIZATION AND CONSENT (JUL 1995)

(a) The Government authorizes and consents to all use and manufacture, in performing this contract or any subcontract at any tier, of any invention described in and covered by a United States patent (1) embodied in the structure or composition of any article the delivery of which is accepted by the Government under this contract or (2) used in machinery, tools, or methods whose use necessarily results from compliance by the Contractor or a subcontractor with (i) specifications or written provisions forming a part of this contract or (ii) specific written instructions given by the Contracting Officer directing the manner of performance. The entire liability to the Government for infringement of a patent of the United States shall be determined solely by the provisions of the indemnity clause, if any, included in this contract or any subcontract hereunder (including any lower-tier subcontract), and the Government assumes liability for all other infringement to the extent of the authorization and consent hereinabove granted.

(b) The Contractor agrees to include, and require inclusion of, this clause, suitably modified to identify the parties, in all subcontracts at any tier for supplies or services (including construction, architect-engineer services, and materials, supplies, models, samples, and design or testing services expected to exceed the simplified acquisition threshold (however, omission of this clause from any subcontract, including those at or below the simplified acquisition threshold, does not affect this authorization and consent.)

(End of clause)

52.227-2 NOTICE AND ASSISTANCE REGARDING PATENT AND COPYRIGHT INFRINGEMENT (AUG 1996)

(a) The Contractor shall report to the Contracting Officer, promptly and in reasonable written detail, each notice or claim of patent or copyright infringement based on the performance of this contract of which the Contractor has knowledge.

(b) In the event of any claim or suit against the Government on account of any alleged patent or copyright infringement arising out of the performance of this contract or out of the use of any supplies furnished or work or services performed under this contract, the Contractor shall furnish to the Government, when requested by the Contracting Officer, all evidence and information in possession of the Contractor pertaining to such suit or claim. Such evidence and information shall be furnished at the expense of the Government except where the Contractor has agreed to indemnify the Government.

The Contractor agrees to include, and require inclusion of, this clause in all subcontracts at any tier for supplies or services (including construction and architect-engineer subcontracts and those for material, supplies, models, samples, or design or testing services) expected to exceed the simplified acquisition threshold at (FAR) 2.101.to exceed the dollar amount set forth in 13.000 of the Federal Acquisition Regulation (FAR).

(End of clause)

52.227-4 PATENT INDEMNITY--CONSTRUCTION CONTRACTS (APR 1984)

Except as otherwise provided, the Contractor agrees to indemnify the Government and its officers, agents, and employees against liability, including costs and expenses, for infringement upon any United States patent (except a patent issued upon an application that is now or may hereafter be withheld from issue pursuant to a Secrecy Order under 35 U.S.C. 181) arising out of performing this contract or out of the use or disposal by or for the account of the Government of supplies furnished or work performed under this contract.

(End of clause)

52.228-11 PLEDGES OF ASSETS (FEB 1992)

(a) Offerors shall obtain from each person acting as an individual surety on a bid guarantee, a performance bond, or a payment bond--

(1) Pledge of assets; and

(2) Standard Form 28, Affidavit of Individual Surety.

(b) Pledges of assets from each person acting as an individual surety shall be in the form of--

(1) Evidence of an escrow account containing cash, certificates of deposit, commercial or Government securities, or other assets described in FAR 28.203-2 (except see 28.203-2(b)(2) with respect to Government securities held in book entry form) and/or;

(2) A recorded lien on real estate. The offeror will be required to provide--

(i) Evidence of title in the form of a certificate of title prepared by a title insurance company approved by the United States Department of Justice. This title evidence must show fee simple title vested in the surety along with any concurrent owners; whether any real estate taxes are due and payable; and any recorded encumbrances against the property, including the lien filed in favor of the Government as required by FAR 28.203-3(d);

(ii) Evidence of the amount due under any encumbrance shown in the evidence of title;

(iii) A copy of the current real estate tax assessment of the property or a current appraisal dated no earlier than 6 months prior to the date of the bond, prepared by a professional appraiser who certifies that the appraisal has been conducted in accordance with the generally accepted appraisal standards as reflected in the Uniform Standards of Professional Appraisal Practice, as promulgated by the Appraisal Foundation.

(End of clause)

52.229-3 FEDERAL, STATE, AND LOCAL TAXES (JAN 1991)

(a) "Contract date," as used in this clause, means the date set for bid opening or, if this is a negotiated contract or a modification, the effective date of this contract or modification.

"All applicable Federal, State, and local taxes and duties," as used in this clause, means all taxes and duties, in effect on the contract date, that the taxing authority is imposing and collecting on the transactions or property covered by this contract.

"After-imposed Federal tax," as used in this clause, means any new or increased Federal excise tax or duty, or tax that was exempted or excluded on the contract date but whose exemption was later revoked or reduced during the contract period, on the transactions or property covered by this contract that the Contractor is required to pay or bear as the result of legislative, judicial, or administrative action taking effect after the contract date. It does not include social security tax or other employment taxes.

"After-relieved Federal tax," as used in this clause, means any amount of Federal excise tax or duty, except social security or other employment taxes, that would otherwise have been payable on the transactions or property covered by this contract, but which the Contractor is not required to pay or bear, or for which the Contractor obtains a refund or drawback, as the result of legislative, judicial, or administrative action taking effect after the contract date.

(b) The contract price includes all applicable Federal, State, and local taxes and duties.

(c) The contract price shall be increased by the amount of any after-imposed Federal tax, provided the Contractor warrants in writing that

no amount for such newly imposed Federal excise tax or duty or rate increase was included in the contract price, as a contingency reserve or otherwise.

(d) The contract price shall be decreased by the amount of any after-relieved Federal tax.

(e) The contract price shall be decreased by the amount of any Federal excise tax or duty, except social security or other employment taxes, that the Contractor is required to pay or bear, or does not obtain a refund of, through the Contractor's fault, negligence, or failure to follow instructions of the Contracting Officer.

(f) No adjustment shall be made in the contract price under this clause unless the amount of the adjustment exceeds $250.

(g) The Contractor shall promptly notify the Contracting Officer of all matters relating to any Federal excise tax or duty that reasonably may be expected to result in either an increase or decrease in the contract price and shall take appropriate action as the Contracting Officer directs.

(h) The Government shall, without liability, furnish evidence appropriate to establish exemption from any Federal, State, or local tax when the Contractor requests such evidence and a reasonable basis exists to sustain the exemption.

(End of clause)

52.229-5 TAXES--CONTRACTS PERFORMED IN U.S. POSSESSIONS OR PUERTO RICO (APR 1984)

The term "local taxes," as used in the Federal, State, and local taxes clause of this contract, includes taxes imposed by a possession of the United States or by Puerto Rico.

(End of clause)

52.232-5 PAYMENTS UNDER FIXED-PRICE CONSTRUCTION CONTRACTS (MAY 1997)

(a) Payment of price. The Government shall pay the Contractor the contract price as provided in this contract.

(b) Progress payments. The Government shall make progress payments monthly as the work proceeds, or at more frequent intervals as determined by the Contracting Officer, on estimates of work accomplished which meets the standards of quality established under the contract, as approved by the Contracting Officer.

(1) The Contractor's request for progress payments shall include the following substantiation:

(i) An itemization of the amounts requested, related to the various elements of work required by the contract covered by the payment requested.

(ii) A listing of the amount included for work performed by each subcontractor under the contract.

(iii) A listing of the total amount of each subcontract under the contract.

(iv) A listing of the amounts previously paid to each such subcontractor under the contract.

(v) Additional supporting data in a form and detail required by the Contracting Officer.

(2) In the preparation of estimates, the Contracting Officer may authorize material delivered on the site and preparatory work done to be taken into consideration. Material delivered to the Contractor at locations other than the site also may be taken into consideration if--

(i) Consideration is specifically authorized by this contract; and

(ii) The Contractor furnishes satisfactory evidence that it has acquired title to such material and that the material will be used to perform this contract.

(c) Contractor certification. Along with each request for progress payments, the Contractor shall furnish the following certification, or payment shall not be made: (However, if the Contractor elects to delete paragraph (c)(4) from the certification, the certification is still acceptable.)

I hereby certify, to the best of my knowledge and belief, that--

(1) The amounts requested are only for performance in accordance with the specifications, terms, and conditions of the contract;

(2) Payments to subcontractors and suppliers have been made from previous payments received under the contract, and timely payments will be made from the proceeds of the payment covered by this certification, in accordance with subcontract agreements and the requirements of chapter 39 of Title 31, United States Code;

(3) This request for progress payments does not include any amounts which the prime contractor intends to withhold or retain from a subcontractor or supplier in accordance with the terms and conditions of the subcontract; and

(4) This certification is not to be construed as final acceptance of a subcontractor's performance.

_____

(Name)

_____

(Title)

_____

(Date)

(d) Refund of unearned amounts. If the Contractor, after making a certified request for progress payments, discovers that a portion or all of such request constitutes a payment for performance by the Contractor that fails to conform to the specifications, terms, and conditions of this contract (hereinafter referred to as the "unearned amount"), the Contractor shall--

(1) Notify the Contracting Officer of such performance deficiency; and

(2) Be obligated to pay the Government an amount (computed by the Contracting Officer in the manner provided in paragraph (j) of this clause) equal to interest on the unearned amount from the 8th day after the date of receipt of the unearned amount until--

(i) The date the Contractor notifies the Contracting Officer that the performance deficiency has been corrected; or

(ii) The date the Contractor reduces the amount of any subsequent certified request for progress payments by an amount equal to the unearned amount.

(e) Retainage. If the Contracting Officer finds that satisfactory progress was achieved during any period for which a progress payment is to be made, the Contracting Officer shall authorize payment to be made in full. However, if satisfactory progress has not been made, the Contracting Officer may retain a maximum of 10 percent of the amount of the payment until satisfactory progress is achieved. When the work is substantially complete, the Contracting Officer may retain from previously withheld funds and future progress payments that amount the Contracting Officer considers adequate for protection of the Government and shall release to the Contractor all the remaining withheld funds. Also, on completion and acceptance of each separate building, public work, or other division of the contract, for which the price is stated separately in the contract, payment shall be made for the completed work without retention of a percentage.

(f) Title, liability, and reservation of rights. All material and work covered by progress payments made shall, at the time of payment, become the sole property of the Government, but this shall not be construed as--

(1) Relieving the Contractor from the sole responsibility for all material and work upon which payments have been made or the restoration of any damaged work; or

(2) Waiving the right of the Government to require the fulfillment of all of the terms of the contract.

(g) Reimbursement for bond premiums. In making these progress payments, the Government shall, upon request, reimburse the Contractor for the amount of premiums paid for performance and payment bonds (including coinsurance and reinsurance agreements, when applicable) after the Contractor has furnished evidence of full payment to the surety. The retainage provisions in paragraph (e) of this clause shall not apply to that portion of progress payments attributable to bond premiums.

(h) Final payment. The Government shall pay the amount due the Contractor under this contract after--

(1) Completion and acceptance of all work;

(2) Presentation of a properly executed voucher; and

(3) Presentation of release of all claims against the Government arising by virtue of this contract, other than claims, in stated amounts, that the Contractor has specifically excepted from the operation of the release. A release may also be required of the assignee if the Contractor's claim to amounts payable under this contract has been assigned under the Assignment of Claims Act of 1940 (31 U.S.C. 3727 and 41 U.S.C. 15).

(i) Limitation because of undefinitized work. Notwithstanding any provision of this contract, progress payments shall not exceed 80 percent on work accomplished on undefinitized contract actions. A "contract action" is any action resulting in a contract, as defined in FAR Subpart 2.1, including contract modifications for additional supplies or services, but not including contract modifications that are within the scope and under the terms of the contract, such as contract modifications issued pursuant to the Changes clause, or funding and other administrative changes.

(j) Interest computation on unearned amounts. In accordance with 31 U.S.C. 3903(c)(1), the amount payable under subparagraph (d)(2) of this clause shall be--

(1) Computed at the rate of average bond equivalent rates of 91-day Treasury bills auctioned at the most recent auction of such bills prior to the date the Contractor receives the unearned amount; and

(2) Deducted from the next available payment to the Contractor.

(End of clause)

52.232-17 INTEREST (JUNE 1996)

(a) Except as otherwise provided in this contract under a Price Reduction for Defective Cost or Pricing Data clause or a Cost Accounting Standards clause, all amounts that become payable by the Contractor to the Government under this contract (net of any applicable tax credit under the Internal Revenue Code (26 U.S.C. 1481)) shall bear simple interest from the date due until paid unless paid within 30 days of becoming due. The interest rate shall be the interest rate established by the Secretary of the Treasury as provided in Section 12 of the Contract Disputes Act of 1978 (Public Law 95-563), which is applicable to the period in which the amount becomes due, as provided in paragraph (b) of this clause, and then at the rate applicable for each six-month period as fixed by the Secretary until the amount is paid. reproduce, prepare derivative works, distribute copies to the public, and (b) Amounts shall be due at the earliest of the following dates:

(1) The date fixed under this contract.

(2) The date of the first written demand for payment consistent with this contract, including any demand resulting from a default termination.

(3) The date the Government transmits to the Contractor a proposed supplemental agreement to confirm completed negotiations establishing the amount of debt.

(4) If this contract provides for revision of prices, the date of written notice to the Contractor stating the amount of refund payable in connection with a pricing proposal or a negotiated pricing agreement not confirmed by contract modification.

(c) The interest charge made under this clause may be reduced under the procedures prescribed in 32.614-2 of the Federal Acquisition Regulation in effect on the date of this contract.

(End of clause)

52.232-23 ASSIGNMENT OF CLAIMS (JAN 1986)

(a) The Contractor, under the Assignment of Claims Act, as amended, 31 U.S.C. 3727, 41 U.S.C. 15 (hereafter referred to as "the Act"), may assign its rights to be paid amounts due or to become due as a result of the performance of this contract to a bank, trust company, or other financing institution, including any Federal lending agency. The assignee under such an assignment may thereafter further assign or reassign its right under the original assignment to any type of financing institution described in the preceding sentence.

(b) Any assignment or reassignment authorized under the Act and this clause shall cover all unpaid amounts payable under this contract, and shall not be made to more than one party, except that an assignment or reassignment may be made to one party as agent or trustee for two or more parties participating in the financing of this contract.

(c) The Contractor shall not furnish or disclose to any assignee under this contract any classified document (including this contract) or information related to work under this contract until the Contracting Officer authorizes such action in writing.

(End of clause)

52.232-27 PROMPT PAYMENT FOR CONSTRUCTION CONTRACTS (FEB 2002)

Notwithstanding any other payment terms in this contract, the Government will make invoice payments under the terms and conditions specified in this clause. The Government considers payment as being made on the day a check is dated or the date of an electronic funds transfer. Definitions of pertinent terms are set forth in sections 2.101, 32.001, and 32.902 of the Federal Acquisition Regulation. All days referred to in this clause are calendar days, unless otherwise specified. (However, see paragraph (a)(3) concerning payments due on Saturdays, Sundays, and legal holidays.)

(a) Invoice payments--(1) Types of invoice payments. For purposes of this clause, there are several types of invoice payments that may occur under this contract, as follows:

(i) Progress payments, if provided for elsewhere in this contract, based on Contracting Officer approval of the estimated amount and value of work or services performed, including payments for reaching milestones in any project.

(A) The due date for making such payments is 14 days after the designated billing office receives a proper payment request. If the designated billing office fails to annotate the payment request with the actual date of receipt at the time of receipt, the payment due date is the 14th day after the date of the Contractor's payment request, provided the designated billing office receives a proper payment request and there is no disagreement over quantity, quality, or Contractor compliance with contract requirements.

(B) The due date for payment of any amounts retained by the Contracting Officer in accordance with the clause at 52.232-5, Payments Under Fixed-Price Construction Contracts, is as specified in the contract or, if not specified, 30 days after approval by the Contracting Officer for release to the Contractor.

(ii) Final payments based on completion and acceptance of all work and presentation of release of all claims against the Government arising by virtue of the contract, and payments for partial deliveries that have been accepted by the Government (e.g., each separate building, public work, or other division of the contract for which the price is stated separately in the contract).

(A) The due date for making such payments is the later of the following two events:

(1) The 30th day after the designated billing office receives a proper invoice from the Contractor.

(2) The 30th day after Government acceptance of the work or services completed by the Contractor. For a final invoice when the payment amount is subject to contract settlement actions (e.g., release of claims), acceptance is deemed to occur on the effective date of the contract settlement.

(B) If the designated billing office fails to annotate the invoice with the date of actual receipt at the time of receipt, the invoice payment due date is the 30th day after the date of the Contractor's invoice, provided the designated billing office receives a proper invoice and there is no disagreement over quantity, quality, or Contractor compliance with contract requirements.

(2) Contractor's invoice. The Contractor shall prepare and submit invoices to the designated billing office specified in the contract. A proper invoice must include the items listed in paragraphs (a)(2)(i) through (a)(2)(xi) of this clause. If the invoice does not comply with these requirements, the designated billing office must return it within 7 days after receipt, with the reasons why it is not a proper invoice. When computing any interest penalty owed the Contractor, the Government

will take into account if the Government notifies the Contractor of an improper invoice in an untimely manner.

(i) Name and address of the Contractor.

(ii) Invoice date and invoice number. (The Contractor should date invoices as close as possible to the date of mailing or transmission.)

(iii) Contract number or other authorization for work or services performed (including order number and contract line item number).

(iv) Description of work or services performed.

(v) Delivery and payment terms (e.g., discount for prompt payment terms).

(vi) Name and address of Contractor official to whom payment is to be sent (must be the same as that in the contract or in a proper notice of assignment).

(vii) Name (where practicable), title, phone number, and mailing address of person to notify in the event of a defective invoice.

(viii) For payments described in paragraph (a)(1)(i) of this clause, substantiation of the amounts requested and certification in accordance with the requirements of the clause at 52.232-5, Payments Under Fixed-Price Construction Contracts.

(ix) Taxpayer Identification Number (TIN). The Contractor shall include its TIN on the invoice only if required elsewhere in this contract.

(x) Electronic funds transfer (EFT) banking information.

(A) The Contractor shall include EFT banking information on the invoice only if required elsewhere in this contract.

(B) If EFT banking information is not required to be on the invoice, in order for the invoice to be a proper invoice, the Contractor shall have submitted correct EFT banking information in accordance with the applicable solicitation provision (e.g., 52.232-38, Submission of Electronic Funds Transfer Information with Offer), contract clause (e.g., 52.232-33, Payment by Electronic Funds Transfer--Central Contractor Registration, or 52.232-34, Payment by Electronic Funds Transfer--Other Than Central Contractor Registration), or applicable agency procedures.

(C) EFT banking information is not required if the Government waived the requirement to pay by EFT.

(xi) Any other information or documentation required by the contract.

(3) Interest penalty. The designated payment office will pay an interest penalty automatically, without request from the Contractor, if payment is not made by the due date and the conditions listed in paragraphs (a)(3)(i) through (a)(3)(iii) of this clause are met, if applicable. However, when the due date falls on a Saturday, Sunday, or

legal holiday, the designated payment office may make payment on the following working day without incurring a late payment interest penalty.

(i) The designated billing office received a proper invoice.

(ii) The Government processed a receiving report or other Government documentation authorizing payment and there was no disagreement over quantity, quality, Contractor compliance with any contract term or condition, or requested progress payment amount.

(iii) In the case of a final invoice for any balance of funds due the Contractor for work or services performed, the amount was not subject to further contract settlement actions between the Government and the Contractor.

(4) Computing penalty amount. The Government will compute the interest penalty in accordance with the Office of Management and Budget prompt payment regulations at 5 CFR part 1315.

(i) For the sole purpose of computing an interest penalty that might be due the Contractor for payments described in paragraph (a)(1)(ii) of this clause, Government acceptance or approval is deemed to occur constructively on the 7th day after the Contractor has completed the work or services in accordance with the terms and conditions of the contract. If actual acceptance or approval occurs within the constructive acceptance or approval period, the Government will base the determination of an interest penalty on the actual date of acceptance or approval. Constructive acceptance or constructive approval requirements do not apply if there is a disagreement over quantity, quality, or Contractor compliance with a contract provision. These requirements also do not compel Government officials to accept work or services, approve Contractor estimates, perform contract administration functions, or make payment prior to fulfilling their responsibilities.

(ii) The prompt payment regulations at 5 CFR 1315.10(c) do not require the Government to pay interest penalties if payment delays are due to disagreement between the Government and the Contractor over the payment amount or other issues involving contract compliance, or on amounts temporarily withheld or retained in accordance with the terms of the contract. The Government and the Contractor shall resolve claims involving disputes, and any interest that may be payable in accordance with the clause at FAR 52.233-1, Disputes.

(5) Discounts for prompt payment. The designated payment office will pay an interest penalty automatically, without request from the Contractor, if the Government takes a discount for prompt payment improperly. The Government will calculate the interest penalty in accordance with the prompt payment regulations at 5 CFR part 1315.

(6) Additional interest penalty. (i) The designated payment office will pay a penalty amount, calculated in accordance with the prompt payment regulations at 5 CFR part 1315 in addition to the interest penalty amount only if--

(A) The Government owes an interest penalty of $1 or more;

(B) The designated payment office does not pay the interest penalty within 10 days after the date the invoice amount is paid; and

(C) The Contractor makes a written demand to the designated payment office for additional penalty payment, in accordance with paragraph (a)(6)(ii) of this clause, postmarked not later than 40 days after the date the invoice amount is paid.

(ii)(A) The Contractor shall support written demands for additional penalty payments with the following data. The Government will not request any additional data. The Contractor shall--

(1) Specifically assert that late payment interest is due under a specific invoice, and request payment of all overdue late payment interest penalty and such additional penalty as may be required;

(2) Attach a copy of the invoice on which the unpaid late payment interest was due; and

(3) State that payment of the principal has been received, including the date of receipt.

(B) If there is no postmark or the postmark is illegible--

(1) The designated payment office that receives the demand will annotate it with the date of receipt provided the demand is received on or before the 40th day after payment was made; or

(2) If the designated payment office fails to make the required annotation, the Government will determine the demand's validity based on the date the Contractor has placed on the demand, provided such date is no later than the 40th day after payment was made.

(b) Contract financing payments. If this contract provides for contract financing, the Government will make contract financing payments in accordance with the applicable contract financing clause.

(c) Subcontract clause requirements. The Contractor shall include in each subcontract for property or services (including a material supplier) for the purpose of performing this contract the following:

(1) Prompt payment for subcontractors. A payment clause that obligates the Contractor to pay the subcontractor for satisfactory performance under its subcontract not later than 7 days from receipt of payment out of such amounts as are paid to the Contractor under this contract.

(2) Interest for subcontractors. An interest penalty clause that obligates the Contractor to pay to the subcontractor an interest penalty for each payment not made in accordance with the payment clause--

(i) For the period beginning on the day after the required payment date and ending on the date on which payment of the amount due is made; and

(ii) Computed at the rate of interest established by the Secretary of the Treasury, and published in the Federal Register, for interest payments under section 12 of the Contract Disputes Act of 1978 (41 U.S.C. 611) in effect at the time the Contractor accrues the obligation to pay an interest penalty.

(3) Subcontractor clause flowdown. A clause requiring each subcontractor to use:

(i) Include a payment clause and an interest penalty clause conforming to the standards set forth in paragraphs (c)(1) and (c)(2) of this clause in each of its subcontracts; and

(ii) Require each of its subcontractors to include such clauses in their subcontracts with each lower-tier subcontractor or supplier.

(d) Subcontract clause interpretation. The clauses required by paragraph (c) of this clause shall not be construed to impair the right of the Contractor or a subcontractor at any tier to negotiate, and to include in their subcontract, provisions that--

(1) Retainage permitted. Permit the Contractor or a subcontractor to retain (without cause) a specified percentage of each progress payment otherwise due to a subcontractor for satisfactory performance under the subcontract without incurring any obligation to pay a late payment interest penalty, in accordance with terms and conditions agreed to by the parties to the subcontract, giving such recognition as the parties deem appropriate to the ability of a subcontractor to furnish a performance bond and a payment bond;

(2) Withholding permitted. Permit the Contractor or subcontractor to make a determination that part or all of the subcontractor's request for payment may be withheld in accordance with the subcontract agreement; and

(3) Withholding requirements. Permit such withholding without incurring any obligation to pay a late payment penalty if--

(i) A notice conforming to the standards of paragraph (g) of this clause previously has been furnished to the subcontractor; and

(ii) The Contractor furnishes to the Contracting Officer a copy of any notice issued by a Contractor pursuant to paragraph (d)(3)(i) of this clause.

(e) Subcontractor withholding procedures. If a Contractor, after making a request for payment to the Government but before making a payment to a subcontractor for the subcontractor's performance covered by the payment request, discovers that all or a portion of the payment otherwise due such subcontractor is subject to withholding from the subcontractor in accordance with the subcontract agreement, then the Contractor shall--

(1) Subcontractor notice. Furnish to the subcontractor a notice conforming to the standards of paragraph (g) of this clause as soon as practicable upon ascertaining the cause giving rise to a withholding, but prior to the due date for subcontractor payment;

(2) Contracting Officer notice. Furnish to the Contracting Officer, as soon as practicable, a copy of the notice furnished to the subcontractor pursuant to paragraph (e)(1) of this clause;

(3) Subcontractor progress payment reduction. Reduce the subcontractor's progress payment by an amount not to exceed the amount specified in the notice of withholding furnished under paragraph (e)(1) of this clause;

(4) Subsequent subcontractor payment. Pay the subcontractor as soon as practicable after the correction of the identified subcontract performance deficiency, and--

(i) Make such payment within--

(A) Seven days after correction of the identified subcontract performance deficiency (unless the funds therefor must be recovered from the Government because of a reduction under paragraph (e)(5)(i)) of this clause; or

(B) Seven days after the Contractor recovers such funds from the Government; or

(ii) Incur an obligation to pay a late payment interest penalty computed at the rate of interest established by the Secretary of the Treasury, and published in the Federal Register, for interest payments under section 12 of the Contracts Disputes Act of 1978 (41 U.S.C. 611) in effect at the time the Contractor accrues the obligation to pay an interest penalty;

(5) Notice to Contracting Officer. Notify the Contracting Officer upon--

(i) Reduction of the amount of any subsequent certified application for payment; or

(ii) Payment to the subcontractor of any withheld amounts of a progress payment, specifying--

(A) The amounts withheld under paragraph (e)(1) of this clause; and

(B) The dates that such withholding began and ended; and

(6) Interest to Government. Be obligated to pay to the Government an amount equal to interest on the withheld payments (computed in the manner provided in 31 U.S.C. 3903(c)(1)), from the 8th day after receipt of the withheld amounts from the Government until--

(i) The day the identified subcontractor performance deficiency is corrected; or

(ii) The date that any subsequent payment is reduced under paragraph (e)(5)(i) of this clause.

(f) Third-party deficiency reports--(1) Withholding from subcontractor. If a Contractor, after making payment to a first-tier

subcontractor, receives from a supplier or subcontractor of the first-tier subcontractor (hereafter referred to as a "second-tier subcontractor") a written notice in accordance with section 2 of the Act of August 24, 1935 (40 U.S.C. 270b, Miller Act), asserting a deficiency in such first-tier subcontractor's performance under the contract for which the Contractor may be ultimately liable, and the Contractor determines that all or a portion of future payments otherwise due such first-tier subcontractor is subject to withholding in accordance with the subcontract agreement, the Contractor may, without incurring an obligation to pay an interest penalty under paragraph (e)(6) of this clause--

(i) Furnish to the first-tier subcontractor a notice conforming to the standards of paragraph (g) of this clause as soon as practicable upon making such determination; and

(ii) Withhold from the first-tier subcontractor's next available progress payment or payments an amount not to exceed the amount specified in the notice of withholding furnished under paragraph (f)(1)(i) of this clause.

(2) Subsequent payment or interest charge. As soon as practicable, but not later than 7 days after receipt of satisfactory written notification that the identified subcontract performance deficiency has been corrected, the Contractor shall--

(i) Pay the amount withheld under paragraph (f)(1)(ii) of this clause to such first-tier subcontractor; or

(ii) Incur an obligation to pay a late payment interest penalty to such first-tier subcontractor computed at the rate of interest established by the Secretary of the Treasury, and published in the Federal Register, for interest payments under section 12 of the Contracts Disputes Act of 1978 (41 U.S.C. 611) in effect at the time the Contractor accrues the obligation to pay an interest penalty.

(g) Written notice of subcontractor withholding. The Contractor shall issue a written notice of any withholding to a subcontractor (with a copy furnished to the Contracting Officer), specifying--

(1) The amount to be withheld;

(2) The specific causes for the withholding under the terms of the subcontract; and

(3) The remedial actions to be taken by the subcontractor in order to receive payment of the amounts withheld.

(h) Subcontractor payment entitlement. The Contractor may not request payment from the Government of any amount withheld or retained in accordance with paragraph (d) of this clause until such time as the Contractor has determined and certified to the Contracting Officer that the subcontractor is entitled to the payment of such amount.

(i) Prime-subcontractor disputes. A dispute between the Contractor and subcontractor relating to the amount or entitlement of a subcontractor to a payment or a late payment interest penalty under a

clause included in the subcontract pursuant to paragraph (c) of this clause does not constitute a dispute to which the Government is a party. The Government may not be interpleaded in any judicial or administrative proceeding involving such a dispute.

(j) Preservation of prime-subcontractor rights. Except as provided in paragraph (i) of this clause, this clause shall not limit or impair any contractual, administrative, or judicial remedies otherwise available to the Contractor or a subcontractor in the event of a dispute involving late payment or nonpayment by the Contractor or deficient subcontract performance or nonperformance by a subcontractor.

(k) Non-recourse for prime contractor interest penalty. The Contractor's obligation to pay an interest penalty to a subcontractor pursuant to the clauses included in a subcontract under paragraph (c) of this clause shall not be construed to be an obligation of the Government for such interest penalty. A cost-reimbursement claim may not include any amount for reimbursement of such interest penalty.

(l) Overpayments. If the Contractor becomes aware of a duplicate payment or that the Government has otherwise overpaid on an invoice payment, the Contractor shall immediately notify the Contracting Officer and request instructions for disposition of the overpayment.

(End of clause)

52.232-29 TERMS FOR FINANCING OF PURCHASES OF COMMERCIAL ITEMS (FEB 2002)

(a) Contractor entitlement to financing payments. The Contractor may request, and the Government shall pay, a contract financing payment as specified elsewhere in this contract when: the payment requested is properly due in accordance with this contract; the supplies deliverable or services due under the contract will be delivered or performed in accordance with the contract; and there has been no impairment or diminution of the Government's security under this contract.

(b) Special terms regarding termination for cause. If this contract is terminated for cause, the Contractor shall, on demand, repay to the Government the amount of unliquidated contract financing payments. The Government shall be liable for no payment except as provided by the Termination for Cause paragraph of the clause at 52.212-4, Contract Terms and Conditions--Commercial Items.

(c) Security for Government financing. In the event the Contractor fails to provide adequate security, as required in this contract, no financing payment shall be made under this contract. Upon receipt of adequate security, financing payments shall be made, including all previous payments to which the Contractor is entitled, in accordance with the terms of the provisions for contract financing. If at any time the Contracting Officer determines that the security provided by the Contractor is insufficient, the Contractor shall promptly provide such additional security as the Contracting Officer determines necessary. In the event the Contractor fails to provide such additional security, the Contracting Officer may collect or liquidate such security that has been provided and suspend further payments to the Contractor; and the Contractor shall repay to the Government the

amount of unliquidated financing payments as the Contracting Officer at his sole discretion deems repayable.

(d) Reservation of rights.

(1) No payment or other action by the Government under this clause shall (i) excuse the Contractor from performance of obligations under this contract, or (ii) constitute a waiver of any of the rights or remedies of the parties under the contract.

(2) The Government's rights and remedies under this clause (i) shall not be exclusive, but rather shall be in addition to any other rights and remedies provided by law or this contract; and (ii) shall not be affected by delayed, partial, or omitted exercise of any right, remedy, power, or privilege, nor shall such exercise or any single exercise preclude or impair any further exercise under this clause or the exercise of any other right, power, or privilege of the Government.

(e) Content of Contractor's request for financing payment. The Contractor's request for financing payment shall contain the following:

(1) The name and address of the Contractor;

(2) The date of the request for financing payment;

(3) The contract number and/or other identifier of the contract or order under which the request is made; and

(4) An appropriately itemized and totaled statement of the financing payments requested and such other information as is necessary for computation of the payment, prepared in accordance with the direction of the Contracting Officer.

(f) Limitation on frequency of financing payments. Contractor financing payments shall be provided no more frequently than monthly.

(g) Dates for payment. A payment under this clause is a contract financing payment and not subject to the interest penalty provisions of the Prompt Payment Act. The designated payment office will pay approved payment requests within 30 days of submittal of a proper request for payment.

(h) Conflict between terms of offeror and clause. In the event of any conflict between the terms proposed by the offeror in response to an invitation to propose financing terms (52.232-31) and the terms in this clause, the terms of this clause shall govern.

(End of clause)

52.232-33 PAYMENT BY ELECTRONIC FUNDS TRANSFER—CENTRAL CONTRACTOR REGISTRATION (MAY 1999)

(a) Method of payment. (1) All payments by the Government under this contract shall be made by electronic funds transfer (EFT), except as provided in paragraph (a)(2) of this clause. As used in this clause, the term "EFT" refers to the funds transfer and may also include the payment information transfer.

(2) In the event the Government is unable to release one or more payments by EFT, the Contractor agrees to either--

(i) Accept payment by check or some other mutually agreeable method of payment; or

(ii) Request the Government to extend the payment due date until such time as the Government can make payment by EFT (but see paragraph (d) of this clause).

(b) Contractor's EFT information. The Government shall make payment to the Contractor using the EFT information contained in the Central Contractor Registration (CCR) database. In the event that the EFT information changes, the Contractor shall be responsible for providing the updated information to the CCR database.

(c) Mechanisms for EFT payment. The Government may make payment by EFT through either the Automated Clearing House (ACH) network, subject to the rules of the National Automated Clearing House Association, or the Fedwire Transfer System. The rules governing Federal payments through the ACH are contained in 31 CFR part 210.

(d) Suspension of payment. If the Contractor's EFT information in the CCR database is incorrect, then the Government need not make payment to the Contractor under this contract until correct EFT information is entered into the CCR database; and any invoice or contract financing request shall be deemed not to be a proper invoice for the purpose of prompt payment under this contract. The prompt payment terms of the contract regarding notice of an improper invoice and delays in accrual of interest penalties apply.

(e) Contractor EFT arrangements. If the Contractor has identified multiple payment receiving points (i.e., more than one remittance address and/or EFT information set) in the CCR database, and the Contractor has not notified the Government of the payment receiving point applicable to this contract, the Government shall make payment to the first payment receiving point (EFT information set or remittance address as applicable) listed in the CCR database.

(f) Liability for uncompleted or erroneous transfers. (1) If an uncompleted or erroneous transfer occurs because the Government used the Contractor's EFT information incorrectly, the Government remains responsible for--

(i) Making a correct payment;

(ii) Paying any prompt payment penalty due; and

(iii) Recovering any erroneously directed funds.

(2) If an uncompleted or erroneous transfer occurs because the Contractor's EFT information was incorrect, or was revised within 30 days of Government release of the EFT payment transaction instruction to the Federal Reserve System, and--

(i) If the funds are no longer under the control of the payment office, the Government is deemed to have made payment and the Contractor is responsible for recovery of any erroneously directed funds; or

(ii) If the funds remain under the control of the payment office, the Government shall not make payment, and the provisions of paragraph (d) of this clause shall apply.

(g) EFT and prompt payment. A payment shall be deemed to have been made in a timely manner in accordance with the prompt payment terms of this contract if, in the EFT payment transaction instruction released to the Federal Reserve System, the date specified for settlement of the payment is on or before the prompt payment due date, provided the specified payment date is a valid date under the rules of the Federal Reserve System.

(h) EFT and assignment of claims. If the Contractor assigns the proceeds of this contract as provided for in the assignment of claims terms of this contract, the Contractor shall require as a condition of any such assignment, that the assignee shall register in the CCR database and shall be paid by EFT in accordance with the terms of this clause. In all respects, the requirements of this clause shall apply to the assignee as if it were the Contractor. EFT information that shows the ultimate recipient of the transfer to be other than the Contractor, in the absence of a proper assignment of claims acceptable to the Government, is incorrect EFT information within the meaning of paragraph (d) of this clause.

(i) Liability for change of EFT information by financial agent. The Government is not liable for errors resulting from changes to EFT information made by the Contractor's financial agent.

(j) Payment information. The payment or disbursing office shall forward to the Contractor available payment information that is suitable for transmission as of the date of release of the EFT instruction to the Federal Reserve System. The Government may request the Contractor to designate a desired format and method(s) for delivery of payment information from a list of formats and methods the payment office is capable of executing. However, the Government does not guarantee that any particular format or method of delivery is available at any particular payment office and retains the latitude to use the format and delivery method most convenient to the Government. If the Government makes payment by check in accordance with paragraph (a) of this clause, the Government shall mail the payment information to the remittance address contained in the CCR database.

(End of Clause)

52.233-1 DISPUTES (JUL 2002)

(a) This contract is subject to the Contract Disputes Act of 1978, as amended (41 U.S.C. 601-613).

(b) Except as provided in the Act, all disputes arising under or relating to this contract shall be resolved under this clause.

(c) Claim, as used in this clause, means a written demand or written assertion by one of the contracting parties seeking, as a matter of right, the payment of money in a sum certain, the adjustment or interpretation of contract terms, or other relief arising under or relating to this contract. However, a written demand or written assertion by the Contractor seeking the payment of money exceeding $100,000 is not a claim under the Act until certified. A voucher, invoice, or other routine request for payment that is not in dispute when submitted is not a claim under the Act. The submission may be converted to a claim under the Act, by complying with the submission and certification requirements of this clause, if it is disputed either as to liability or amount or is not acted upon in a reasonable time.

(d)(1) A claim by the Contractor shall be made in writing and, unless otherwise stated in this contract, submitted within 6 years after accrual of the claim to the Contracting Officer for a written decision. A claim by the Government against the Contractor shall be subject to a written decision by the Contracting Officer.

(2)(i) The contractors shall provide the certification specified in subparagraph (d)(2)(iii) of this clause when submitting any claim -

(A) Exceeding $100,000; or

(B) Regardless of the amount claimed, when using -

(1) Arbitration conducted pursuant to 5 U.S.C. 575-580; or

(2) Any other alternative means of dispute resolution (ADR) technique that the agency elects to handle in accordance with the Administrative Dispute Resolution Act (ADRA).

(ii) The certification requirement does not apply to issues in controversy that have not been submitted as all or part of a claim.

(iii) The certification shall state as follows: "I certify that the claim is made in good faith; that the supporting data are accurate and complete to the best of my knowledge and belief; that the amount requested accurately reflects the contract adjustment for which the Contractor believes the Government is liable; and that I am duly authorized to certify the claim on behalf of the Contractor.

(3) The certification may be executed by any person duly authorized to bind the Contractor with respect to the claim.

(e) For Contractor claims of $100,000 or less, the Contracting Officer must, if requested in writing by the Contractor, render a decision within 60 days of the request. For Contractor-certified claims over $100,000, the Contracting Officer must, within 60 days, decide the claim or notify the Contractor of the date by which the decision will be made.

(f) The Contracting Officer's decision shall be final unless the Contractor appeals or files a suit as provided in the Act.

(g) If the claim by the Contractor is submitted to the Contracting Officer or a claim by the Government is presented to the Contractor,

the parties, by mutual consent, may agree to use alternative disput resolution (ADR). If the Contractor refuses an offer for ADR, the Contractor shall inform the Contracting Officer, in writing, of the Contractor's specific reasons for rejecting the request.

(h) The Government shall pay interest on the amount found due and unpaid from (1) the date the Contracting Officer receives the claim (certified, if required); or (2) the date that payment otherwise would be due, if that date is later, until the date of payment. With regard to claims having defective certifications, as defined in (FAR) 48 CFR 33.201, interest shall be paid from the date that the Contracting Officer initially receives the claim. Simple interest on claims shall be paid at the rate, fixed by the Secretary of the Treasury as provided in the Act, which is applicable to the period during which the Contracting Officer receives the claim and then at the rate applicable for each 6-month period as fixed by the Treasury Secretary during the pendency of the claim.

(i) The Contractor shall proceed diligently with performance of this contract, pending final resolution of any request for relief, claim, appeal, or action arising under the contract, and comply with any decision of the Contracting Officer.

(End of clause)

52.233-3 PROTEST AFTER AWARD (AUG. 1996)

(a) Upon receipt of a notice of protest (as defined in FAR 33.101) or a determination that a protest is likely (see FAR 33.102(d)), the Contracting Officer may, by written order to the Contractor, direct the Contractor to stop performance of the work called for by this contract. The order shall be specifically identified as a stop-work order issued under this clause. Upon receipt of the order, the Contractor shall immediately comply with its terms and take all reasonable steps to minimize the incurrence of costs allocable to the work covered by the order during the period of work stoppage. Upon receipt of the final decision in the protest, the Contracting Officer shall either--

(1) Cancel the stop-work order; or

(2) Terminate the work covered by the order as provided in the Default, or the Termination for Convenience of the Government, clause of this contract.

(b) If a stop-work order issued under this clause is canceled either before or after a final decision in the protest, the Contractor shall resume work. The Contracting Officer shall make an equitable adjustment in the delivery schedule or contract price, or both, and the contract shall be modified, in writing, accordingly, if--

(1) The stop-work order results in an increase in the time required for, or in the Contractor's cost properly allocable to, the performance of any part of this contract; and

(2) The Contractor asserts its right to an adjustment within 30 days after the end of the period of work stoppage; provided, that if the Contracting Officer decides the facts justify the action, the

Contracting Officer may receive and act upon a proposal at any time before final payment under this contract.

(c) If a stop-work order is not canceled and the work covered by the order is terminated for the convenience of the Government, the Contracting Officer shall allow reasonable costs resulting from the stop-work order in arriving at the termination settlement.

(d) If a stop-work order is not canceled and the work covered by the order is terminated for default, the Contracting Officer shall allow, by equitable adjustment or otherwise, reasonable costs resulting from the stop-work order.

(e) The Government's rights to terminate this contract at any time are not affected by action taken under this clause.

(f) If, as the result of the Contractor's intentional or negligent misstatement, misrepresentation, or miscertification, a protest related to this contract is sustained, and the Government pays costs, as provided in FAR 33.102(b)(2) or 33.104(h)(1), the Government may require the Contractor to reimburse the Government the amount of such costs. In addition to any other remedy available, and pursuant to the requirements of Subpart 32.6, the Government may collect this debt by offsetting the amount against any payment due the Contractor under any contract between the Contractor and the Government.

(End of clause)

52.236-2 DIFFERING SITE CONDITIONS (APR 1984)

As prescribed in 36.502, insert the following clause in solicitations and contracts when a fixed-price construction contract or a fixed-price dismantling, demolition, or removal of improvements contract is contemplated and the contract amount is expected to exceed the small purchase limitation. The Contracting Officer may insert the clause in solicitations and contracts when a fixed-price construction or a fixed-price contract for dismantling, demolition, or removal of improvements is contemplated and the contract amount is expected to be within the small purchase limitation.

(a) The Contractor shall promptly, and before the conditions are disturbed, give a written notice to the Contracting Officer of

(1) subsurface or latent physical conditions at the site which differ materially from those indicated in this contract, or

(2) unknown physical conditions at the site, of an unusual nature, which differ materially from those ordinarily encountered and generally recognized as inhering in work of the character provided for in the contract.

(b) The Contracting Officer shall investigate the site conditions promptly after receiving the notice. If the conditions do materially so differ and cause an increase or decrease in the Contractor's cost of, or the time required for, performing any part of the work under this contract, whether or not changed as a result of the conditions, an equitable adjustment shall be made under this clause and the contract

modified in writing accordingly.

(c) No request by the Contractor for an equitable adjustment to the contract under this clause shall be allowed, unless the Contractor has given the written notice required; provided, that the time prescribed in (a) above for giving written notice may be extended by the Contracting Officer.

(d) No request by the Contractor for an equitable adjustment to the contract for differing site conditions shall be allowed if made after final payment under this contract.

(End of clause)

52.236-3 SITE INVESTIGATION AND CONDITIONS AFFECTING THE WORK (APR 1984)

(a) The Contractor acknowledges that it has taken steps reasonably necessary to ascertain the nature and location of the work, and that it has investigated and satisfied itself as to the general and local conditions which can affect the work or its cost, including but not limited to

(1) conditions bearing upon transportation, disposal, handling, and storage of materials;

(2) the availability of labor, water, electric power, and roads;

(3) uncertainties of weather, river stages, tides, or similar physical conditions at the site;

(4) the conformation and conditions of the ground; and (5) the character of equipment and facilities needed preliminary to and during work performance. The Contractor also acknowledges that it has satisfied itself as to the character, quality, and quantity of surface and subsurface materials or obstacles to be encountered insofar as this information is reasonably ascertainable from an inspection of the site, including all exploratory work done by the Government, as well as from the drawings and specifications made a part of this contract. Any failure of the Contractor to take the actions described and acknowledged in this paragraph will not relieve the Contractor from responsibility for estimating properly the difficulty and cost of successfully performing the work, or for proceeding to successfully perform the work without additional expense to the Government.

(b) The Government assumes no responsibility for any conclusions or interpretations made by the Contractor based on the information made available by the Government. Nor does the Government assume responsibility for any understanding reached or representation made concerning conditions which can affect the work by any of its officers or agents before the execution of this contract, unless that understanding or representation is expressly stated in this contract.

(End of clause)

52.236-5 MATERIAL AND WORKMANSHIP (APR 1984)

(a) All equipment, material, and articles incorporated into the work

covered by this contract shall be new and of the most suitable grade for the purpose intended, unless otherwise specifically provided in this contract. References in the specifications to equipment, material, articles, or patented processes by trade name, make, or catalog number, shall be regarded as establishing a standard of quality and shall not be construed as limiting competition. The Contractor may, at its option, use any equipment, material, article, or process that, in the judgment of the Contracting Officer, is equal to that named in the specifications, unless otherwise specifically provided in this contract.

(b) The Contractor shall obtain the Contracting Officer's approval of the machinery and mechanical and other equipment to be incorporated into the work. When requesting approval, the Contractor shall furnish to the Contracting Officer the name of the manufacturer, the model number, and other information concerning the performance, capacity, nature, and rating of the machinery and mechanical and other equipment. When required by this contract or by the Contracting Officer, the Contractor shall also obtain the Contracting Officer's approval of the material or articles which the Contractor contemplates incorporating into the work. When requesting approval, the Contractor shall provide full information concerning the material or articles. When directed to do so, the Contractor shall submit samples for approval at the Contractor's expense, with all shipping charges prepaid. Machinery, equipment, material, and articles that do not have the required approval shall be installed or used at the risk of subsequent rejection.

(c) All work under this contract shall be performed in a skillful and workmanlike manner. The Contracting Officer may require, in writing, that the Contractor remove from the work any employee the Contracting Officer deems incompetent, careless, or otherwise objectionable.

(End of clause)

52.236-6 SUPERINTENDENCE BY THE CONTRACTOR (APR 1984)

At all times during performance of this contract and until the work is completed and accepted, the Contractor shall directly superintend the work or assign and have on the worksite a competent superintendent who is satisfactory to the Contracting Officer and has authority to act for the Contractor.

(End of clause)

52.236-7 PERMITS AND RESPONSIBILITIES (NOV 1991)

The Contractor shall, without additional expense to the Government, be responsible for obtaining any necessary licenses and permits, and for complying with any Federal, State, and municipal laws, codes, and regulations applicable to the performance of the work. The Contractor shall also be responsible for all damages to persons or property that occur as a result of the Contractor's fault or negligence. The Contractor shall also be responsible for all materials delivered and work performed until completion and acceptance of the entire work, except for any completed unit of work, which may have been accepted under the contract.

(End of clause)

52.236-8 OTHER CONTRACTS (APR 1984)

The Government may undertake or award other contracts for additional work at or near the site of the work under this contract. The Contractor shall fully cooperate with the other contractors and with Government employees and shall carefully adapt scheduling and performing the work under this contract to accommodate the additional work, heeding any direction that may be provided by the Contracting Officer. The Contractor shall not commit or permit any act that will interfere with the performance of work by any other contractor or by Government employees.

(End of clause)

52.236-9 PROTECTION OF EXISTING VEGETATION, STRUCTURES, EQUIPMENT, UTILITIES, AND IMPROVEMENTS (APR 1984)

(a) The Contractor shall preserve and protect all structures, equipment, and vegetation (such as trees, shrubs, and grass) on or adjacent to the work site, which are not to be removed and which do not unreasonably interfere with the work required under this contract. The Contractor shall only remove trees when specifically authorized to do so, and shall avoid damaging vegetation that will remain in place. If any limbs or branches of trees are broken during contract performance, or by the careless operation of equipment, or by workmen, the Contractor shall trim those limbs or branches with a clean cut and paint the cut with a tree-pruning compound as directed by the Contracting Officer.

(b) The Contractor shall protect from damage all existing improvements and utilities (1) at or near the work site, and (2) on adjacent property of a third party, the locations of which are made known to or should be known by the Contractor. The Contractor shall repair any damage to those facilities, including those that are the property of a third party, resulting from failure to comply with the requirements of this contract or failure to exercise reasonable care in performing the work. If the Contractor fails or refuses to repair the damage promptly, the Contracting Officer may have the necessary work performed and charge the cost to the Contractor.

(End of clause)

52.236-10 OPERATIONS AND STORAGE AREAS (APR 1984)

(a) The Contractor shall confine all operations (including storage of materials) on Government premises to areas authorized or approved by the Contracting Officer. The Contractor shall hold and save the Government, its officers and agents, free and harmless from liability of any nature occasioned by the Contractor's performance.

(b) Temporary buildings (e.g., storage sheds, shops, offices) and utilities may be erected by the Contractor only with the approval of the Contracting Officer and shall be built with labor and materials furnished by the Contractor without expense to the Government. The temporary buildings and utilities shall remain the property of the Contractor and shall be removed by the Contractor at its expense upon completion of the work. With the written consent of the Contracting Officer, the buildings and utilities may be abandoned and need not be

removed.

(c) The Contractor shall, under regulations prescribed by the Contracting Officer, use only established roadways, or use temporary roadways constructed by the Contractor when and as authorized by the Contracting Officer. When materials are transported in prosecuting the work, vehicles shall not be loaded beyond the loading capacity recommended by the manufacturer of the vehicle or prescribed by any Federal, State, or local law or regulation. When it is necessary to cross curbs or sidewalks, the Contractor shall protect them from damage. The Contractor shall repair or pay for the repair of any damaged curbs, sidewalks, or roads.

(End of clause)

52.236-11 USE AND POSSESSION PRIOR TO COMPLETION (APR 1984)

(a) The Government shall have the right to take possession of or use any completed or partially completed part of the work. Before taking possession of or using any work, the Contracting Officer shall furnish the Contractor a list of items of work remaining to be performed or corrected on those portions of the work that the Government intends to take possession of or use. However, failure of the Contracting Officer to list any item of work shall not relieve the Contractor of responsibility for complying with the terms of the contract. The Government's possession or use shall not be deemed an acceptance of any work under the contract.

(b) While the Government has such possession or use, the Contractor shall be relieved of the responsibility for the loss of or damage to the work resulting from the Government's possession or use, notwithstanding the terms of the clause in this contract entitled "Permits and Responsibilities." If prior possession or use by the Government delays the progress of the work or causes additional expense to the Contractor, an equitable adjustment shall be made in the contract price or the time of completion, and the contract shall be modified in writing accordingly.

(End of clause)

52.236-12 CLEANING UP (APR 1984)

The Contractor shall at all times keep the work area, including storage areas, free from accumulations of waste materials. Before completing the work, the Contractor shall remove from the work and premises any rubbish, tools, scaffolding, equipment, and materials that are not the property of the Government. Upon completing the work, the Contractor shall leave the work area in a clean, neat, and orderly condition satisfactory to the Contracting Officer.

(End of clause)

52.236-13 ACCIDENT PREVENTION (NOV 1991)

(a) The Contractor shall provide and maintain work environments and procedures which will:

(1) safeguard the public and Government personnel, property, materials, supplies, and equipment exposed to Contractor operations and

activities;

(2) avoid interruptions of Government operations and delays in project completion dates; and

(3) control costs in the performance of this contract.

(b) For these purposes on contracts for construction or dismantling, demolition, or removal of improvements, the Contractor shall-

(1) Provide appropriate safety barricades, signs, and signal lights;

(2) Comply with the standards issued by the Secretary of Labor at 29 CFR Part 1926 and 29 CFR Part 1910; and

(3) Ensure that any additional measures the Contracting Officer determines to be reasonably necessary for the purposes are taken.

(c) If this contract is for construction or dismantling, demolition or removal of improvements with any Department of Defense agency or component, the Contractor shall comply with all pertinent provisions of the latest version of U.S. Army Corps of Engineers Safety and Health Requirements Manual, EM 385-1-1, in effect on the date of the solicitation.

(d) Whenever the Contracting Officer becomes aware of any noncompliance with these requirements or any condition which poses a serious or imminent danger to the health or safety of the public or Government personnel, the Contracting Officer shall notify the Contractor orally, with written confirmation, and request immediate initiation of corrective action. This notice, when delivered to the Contractor or the Contractor's representative at the work site, shall be deemed sufficient notice of the noncompliance and that corrective action is required. After receiving the notice, the Contractor shall immediately take corrective action. If the Contractor fails or refuses to promptly take corrective action, the Contracting Officer may issue an order stopping all or part of the work until satisfactory corrective action has been taken. The Contractor shall not be entitled to any equitable adjustment of the contract price or extension of the performance schedule on any stop work order issued under this clause.

The Contractor shall insert this clause, including this paragraph (e), with appropriate changes in the designation of the parties, in subcontracts.

(End of clause)

52.236-17 LAYOUT OF WORK (APR 1984)

The Contractor shall lay out its work from Government established base lines and bench marks indicated on the drawings, and shall be responsible for all measurements in connection with the layout. The Contractor shall furnish, at its own expense, all stakes, templates, platforms, equipment, tools, materials, and labor required to lay out any part of the work. The Contractor shall be responsible for executing the work to the lines and grades that may be established or indicated by the Contracting Officer. The Contractor shall also be

responsible for maintaining and preserving all stakes and other marks established by the Contracting Officer until authorized to remove them. If such marks are destroyed by the Contractor or through its negligence before their removal is authorized, the Contracting Officer may replace them and deduct the expense of the replacement from any amounts due or to become due to the Contractor.

(End of clause)

52.236-21 SPECIFICATIONS AND DRAWINGS FOR CONSTRUCTION (FEB 1997)

(a) The Contractor shall keep on the work site a copy of the drawings and specifications and shall at all times give the Contracting Officer access thereto. Anything mentioned in the specifications and not shown on the drawings, or shown on the drawings and not mentioned in the specifications, shall be of like effect as if shown or mentioned in both. In case of difference between drawings and specifications, the specifications shall govern. In case of discrepancy in the figures, in the drawings, or in the specifications, the matter shall be promptly submitted to the Contracting Officer, who shall promptly make a determination in writing. Any adjustment by the Contractor without such a determination shall be at its own risk and expense. The Contracting Officer shall furnish from time to time such detailed drawings and other information as considered necessary, unless otherwise provided.

(b) Wherever in the specifications or upon the drawings the words "directed", "required", "ordered", "designated", "prescribed", or words of like import are used, it shall be understood that the "direction", "requirement", "order", "designation", or "prescription", of the Contracting Officer is intended and similarly the words "approved", "acceptable", "satisfactory", or words of like import shall mean "approved by," or "acceptable to", or "satisfactory to" the Contracting Officer, unless otherwise expressly stated.

(c) Where "as shown," as indicated", "as detailed", or words of similar import are used, it shall be understood that the reference is made to the drawings accompanying this contract unless stated otherwise. The word "provided" as used herein shall be understood to mean "provide complete in place," that is "furnished and installed".

(d) Shop drawings means drawings, submitted to the Government by the Contractor, subcontractor, or any lower tier subcontractor pursuant to a construction contract, showing in detail (1) the proposed fabrication and assembly of structural elements, and (2) the installation (i.e., fit, and attachment details) of materials or equipment. It includes drawings, diagrams, layouts, schematics, descriptive literature, illustrations, schedules, performance and test data, and similar materials furnished by the contractor to explain in detail specific portions of the work required by the contract. The Government may duplicate, use, and disclose in any manner and for any purpose shop drawings delivered under this contract.

(e) If this contract requires shop drawings, the Contractor shall coordinate all such drawings, and review them for accuracy, completeness, and compliance with contract requirements and shall indicate its approval thereon as evidence of such coordination and

review. Shop drawings submitted to the Contracting Officer without evidence of the Contractor's approval may be returned for resubmission. The Contracting Officer will indicate an approval or disapproval of the shop drawings and if not approved as submitted shall indicate the Government's reasons therefore. Any work done before such approval shall be at the Contractor's risk. Approval by the Contracting Officer shall not relieve the Contractor from responsibility for any errors or omissions in such drawings, nor from responsibility for complying with the requirements of this contract, except with respect to variations described and approved in accordance with (f) below.

(f) If shop drawings show variations from the contract requirements, the Contractor shall describe such variations in writing, separate from the drawings, at the time of submission. If the Contracting Officer approves any such variation, the Contracting Officer shall issue an appropriate contract modification, except that, if the variation is minor or does not involve a change in price or in time of performance, a modification need not be issued.

(g) The Contractor shall submit to the Contracting Officer for approval four copies (unless otherwise indicated) of all shop drawings as called for under the various headings of these specifications. Three sets (unless otherwise indicated) of all shop drawings, will be retained by the Contracting Officer and one set will be returned to the Contractor.

(End of clause)

52.236-26 PRECONSTRUCTION CONFERENCE (FEB 1995)

If the Contracting Officer decides to conduct a preconstruction conference, the successful offeror will be notified and will be required to attend. The Contracting Officer's notification will include specific details regarding the date, time, and location of the conference, any need for attendance by subcontractors, and information regarding the items to be discussed.

(End of clause)

52.242-13 BANKRUPTCY (JUL 1995)

In the event the Contractor enters into proceedings relating to bankruptcy, whether voluntary or involuntary, the Contractor agrees to furnish, by certified mail or electronic commerce method authorized by the contract, written notification of the bankruptcy to the Contracting Officer responsible for administering the contract. This notification shall be furnished within five days of the initiation of the proceedings relating to bankruptcy filing. This notification shall include the date on which the bankruptcy petition was filed, the identity of the court in which the bankruptcy petition was filed, and a listing of Government contract numbers and contracting offices for all Government contracts against which final payment has not been made. This obligation remains in effect until final payment under this contract.

(End of clause)

52.242-14 SUSPENSION OF WORK (APR 1984)

(a) The Contracting Officer may order the Contractor, in writing, to suspend, delay, or interrupt all or any part of the work of this contract for the period of time that the Contracting Officer determines appropriate for the convenience of the Government.

(b) If the performance of all or any part of the work is, for an unreasonable period of time, suspended, delayed, or interrupted (1) by an act of the Contracting Officer in the administration of this contract, or (2) by the Contracting Officer's failure to act within the time specified in this contract (or within a reasonable time if not specified), an adjustment shall be made for any increase in the cost of performance of this contract (excluding profit) necessarily caused by the unreasonable suspension, delay, or interruption, and the contract modified in writing accordingly. However, no adjustment shall be made under this clause for any suspension, delay, or interruption to the extent that performance would have been so suspended, delayed, or interrupted by any other cause, including the fault or negligence of the Contractor, or for which an equitable adjustment is provided for or excluded under any other term or condition of this contract. (c) A claim under this clause shall not be allowed (1) for any costs incurred more than 20 days before the Contractor shall have notified the Contracting Officer in writing of the act or failure to act involved (but this requirement shall not apply as to a claim resulting from a suspension order), and (2) unless the claim, in an amount stated, is asserted in writing as soon as practicable after the termination of the suspension, delay, or interruption, but not later than the date of final payment under the contract.

(End of clause)

52.243-4 CHANGES (AUG 1987)

(a) The Contracting Officer may, at any time, without notice to the sureties, if any, by written order designated or indicated to be a change order, make changes in the work within the general scope of the contract, including changes--

(1) In the specifications (including drawings and designs);

(2) In the method or manner of performance of the work;

(3) In the Government-furnished facilities, equipment, materials, services, or site; or

(4) Directing acceleration in the performance of the work.

(b) Any other written or oral order (which, as used in this paragraph (b), includes direction, instruction, interpretation, or determination) from the Contracting Officer that causes a change shall be treated as a change order under this clause; provided, that the Contractor gives the Contracting Officer written notice stating

(1) the date, circumstances, and source of the order and

(2) that the Contractor regards the order as a change order.

(c) Except as provided in this clause, no order, statement, or conduct

of the Contracting Officer shall be treated as a change under this clause or entitle the Contractor to an equitable adjustment.

(d) If any change under this clause causes an increase or decrease in the Contractor's cost of, or the time required for, the performance of any part of the work under this contract, whether or not changed by any such order, the Contracting Officer shall make an equitable adjustment and modify the contract in writing. However, except for an adjustment based on defective specifications, no adjustment for any change under paragraph (b) of this clause shall be made for any costs incurred more than 20 days before the Contractor gives written notice as required. In the case of defective specifications for which the Government is responsible, the equitable adjustment shall include any increased cost reasonably incurred by the Contractor in attempting to comply with the defective specifications.

(e) The Contractor must assert its right to an adjustment under this clause within 30 days after

(1) receipt of a written change order under paragraph (a) of this clause or (2) the furnishing of a written notice under paragraph (b) of this clause, by submitting to the Contracting Officer a written statement describing the general nature and amount of the proposal, unless this period is extended by the Government. The statement of proposal for adjustment may be included in the notice under paragraph (b) above.

(f) No proposal by the Contractor for an equitable adjustment shall be allowed if asserted after final payment under this contract.

(End of clause)

52.244-6 SUBCONTRACTS FOR COMMERCIAL ITEMS (MAY 2002)

(a) Definitions. As used this clause--

"Commercial item", has the meaning contained in the clause at 52.202-1, Definitions.

"Subcontract", includes a transfer of commercial items between divisions, subsidiaries, or affiliates of the Contractor or subcontractor at any tier.

(b) To the maximum extent practicable, the Contractor shall incorporate, and require its subcontractors at all tiers to incorporate, commercial items or nondevelopmental items as components of items to be supplied under this contract.

(c)(1) The Contractor shall insert the following clauses in subcontracts for commercial items:

(i) 52.219-8, Utilization of Small Business Concerns (OCT 2000) (15 U.S.C. 637(d)(2) and (3)), in all subcontracts that offer further subcontracting opportunities. If the subcontract (except subcontracts to small business concerns) exceeds $500,000 ($1,000,000 for construction of any public facility), the subcontractor must include

52.219-8 in lower tier subcontracts that offer subcontracting opportunities.

(ii) 52.222-26, Equal Opportunity (APR 2002) (E.O. 11246).

(iii) 52.222-35, Equal Opportunity for Special Disabled Veterans, Veterans of the Vietnam Era and Other Eligible Veterans (DEC 2001) (38 U.S.C. 4212(a)).

(iv) 52.222-36, Affirmative Action for Workers with Disabilities (JUN 1998) (29 U.S.C. 793).

(v) 52.247-64, Preference for Privately Owned U.S.-Flag Commercial Vessels (JUN 2000) (46 U.S.C. Appx 1241) (flowdown not required for subcontracts awarded beginning May 1, 1996).

(2) While not required, the Contractor may flow down to subcontracts for commercial items a minimal number of additional clauses necessary to satisfy its contractual obligations.

(d) The Contractor shall include the terms of this clause, including this paragraph (d), in subcontracts awarded under this contract.

(End of clause)

52.246-12 INSPECTION OF CONSTRUCTION (AUG 1996)

(a) Definition. "Work" includes, but is not limited to, materials, workmanship, and manufacture and fabrication of components.

(b) The Contractor shall maintain an adequate inspection system and perform such inspections as will ensure that the work performed under the contract conforms to contract requirements. The Contractor shall maintain complete inspection records and make them available to the Government. All work shall be conducted under the general direction of the Contracting Officer and is subject to Government inspection and test at all places and at all reasonable times before acceptance to ensure strict compliance with the terms of the contract.

(c) Government inspections and tests are for the sole benefit of the Government and do not--

(1) Relieve the Contractor of responsibility for providing adequate quality control measures;

(2) Relieve the Contractor of responsibility for damage to or loss of the material before acceptance;

(3) Constitute or imply acceptance; or

(4) Affect the continuing rights of the Government after acceptance of the completed work under paragraph (i) of this section.

(d) The presence or absence of a Government inspector does not relieve the Contractor from any contract requirement, nor is the inspector authorized to change any term or condition of the specification without the Contracting Officer's written authorization.

(e) The Contractor shall promptly furnish, at no increase in contract price, all facilities, labor, and material reasonably needed for performing such safe and convenient inspections and tests as may be required by the Contracting Officer. The Government may charge to the Contractor any additional cost of inspection or test when work is not ready at the time specified by the Contractor for inspection or test, or when prior rejection makes reinspection or retest necessary. The Government shall perform all inspections and tests in a manner that will not unnecessarily delay the work. Special, full size, and performance tests shall be performed as described in the contract.

(f) The Contractor shall, without charge, replace or correct work found by the Government not to conform to contract requirements, unless in the public interest the Government consents to accept the work with an appropriate adjustment in contract price. The Contractor shall promptly segregate and remove rejected material from the premises.

(g) If the Contractor does not promptly replace or correct rejected work, the Government may (1) by contract or otherwise, replace or correct the work and charge the cost to the Contractor or (2) terminate for default the Contractor's right to proceed.

(h) If, before acceptance of the entire work, the Government decides to examine already completed work by removing it or tearing it out, the Contractor, on request, shall promptly furnish all necessary facilities, labor, and material. If the work is found to be defective or nonconforming in any material respect due to the fault of the Contractor or its subcontractors, the Contractor shall defray the expenses of the examination and of satisfactory reconstruction. However, if the work is found to meet contract requirements, the Contracting Officer shall make an equitable adjustment for the additional services involved in the examination and reconstruction, including, if completion of the work was thereby delayed, an extension of time.

(i) Unless otherwise specified in the contract, the Government shall accept, as promptly as practicable after completion and inspection, all work required by the contract or that portion of the work the Contracting Officer determines can be accepted separately. Acceptance shall be final and conclusive except for latent defects, fraud, gross mistakes amounting to fraud, or the Government's rights under any warranty or guarantee.

(End of clause)

52.246-21 WARRANTY OF CONSTRUCTION (MAR 1994)

(a) In addition to any other warranties in this contract, the Contractor warrants, except as provided in paragraph (i) of this clause, that work performed under this contract conforms to the contract requirements and is free of any defect in equipment, material, or design furnished, or workmanship performed by the Contractor or any subcontractor or supplier at any tier.

(b) This warranty shall continue for a period of 1 year from the date of final acceptance of the work. If the Government takes possession of any part of the work before final acceptance, this warranty shall continue for a period of 1 year from the date the Government takes possession.

(c) The Contractor shall remedy at the Contractor's expense any failure to conform, or any defect. In addition, the Contractor shall remedy at the Contractor's expense any damage to Government-owned or controlled real or personal property, when that damage is the result of--

(1) The Contractor's failure to conform to contract requirements; or

(2) Any defect of equipment, material, workmanship, or design furnished.

(d) The Contractor shall restore any work damaged in fulfilling the terms and conditions of this clause. The Contractor's warranty with respect to work repaired or replaced will run for 1 year from the date of repair or replacement.

(e) The Contracting Officer shall notify the Contractor, in writing, within a reasonable time after the discovery of any failure, defect, or damage.

(f) If the Contractor fails to remedy any failure, defect, or damage within a reasonable time after receipt of notice, the Government shall have the right to replace, repair, or otherwise remedy the failure, defect, or damage at the Contractor's expense.

(g) With respect to all warranties, express or implied, from subcontractors, manufacturers, or suppliers for work performed and materials furnished under this contract, the Contractor shall--

(1) Obtain all warranties that would be given in normal commercial practice;

(2) Require all warranties to be executed, in writing, for the benefit of the Government, if directed by the Contracting Officer; and

(3) Enforce all warranties for the benefit of the Government, if directed by the Contracting Officer.

(h) In the event the Contractor's warranty under paragraph (b) of this clause has expired, the Government may bring suit at its expense to enforce a subcontractor's, manufacturer's, or supplier's warranty.

(i) Unless a defect is caused by the negligence of the Contractor or subcontractor or supplier at any tier, the Contractor shall not be liable for the repair of any defects of material or design furnished by the Government nor for the repair of any damage that results from any defect in Government-furnished material or design.

(j) This warranty shall not limit the Government's rights under the Inspection and Acceptance clause of this contract with respect to latent defects, gross mistakes, or fraud.

(End of clause)

52.248-3 VALUE ENGINEERING--CONSTRUCTION (FEB 2000)

(a) General. The Contractor is encouraged to develop, prepare, and submit value engineering change proposals (VECP's) voluntarily. The Contractor shall share in any instant contract savings realized from accepted VECP's, in accordance with paragraph (f) below.

(b) Definitions. "Collateral costs," as used in this clause, means agency costs of operation, maintenance, logistic support, or Government-furnished property.

"Collateral savings," as used in this clause, means those measurable net reductions resulting from a VECP in the agency's overall projected collateral costs, exclusive of acquisition savings, whether or not the acquisition cost changes.

"Contractor's development and implementation costs," as used in this clause, means those costs the Contractor incurs on a VECP specifically in developing, testing, preparing, and submitting the VECP, as well as those costs the Contractor incurs to make the contractual changes required by Government acceptance of a VECP.

"Government costs," as used in this clause, means those agency costs that result directly from developing and implementing the VECP, such as any net increases in the cost of testing, operations, maintenance, and logistic support. The term does not include the normal administrative costs of processing the VECP.

"Instant contract savings," as used in this clause, means the estimated reduction in Contractor cost of performance resulting from acceptance of the VECP, minus allowable Contractor's development and implementation costs, including subcontractors' development and implementation costs (see paragraph (h) below).

"Value engineering change proposal (VECP)" means a proposal that--

(1) Requires a change to this, the instant contract, to implement; and

(2) Results in reducing the contract price or estimated cost without impairing essential functions or characteristics; provided, that it does not involve a change--

(i) In deliverable end item quantities only; or

(ii) To the contract type only.

(c) VECP preparation. As a minimum, the Contractor shall include in each VECP the information described in subparagraphs (1) through (7) below. If the proposed change is affected by contractually required configuration management or similar procedures, the instructions in those procedures relating to format, identification, and priority assignment shall govern VECP preparation. The VECP shall include the following:

(1) A description of the difference between the existing contract requirement and that proposed, the comparative advantages and disadvantages of each, a justification when an item's function or characteristics are being altered, and the effect of the change on the end item's performance.

(2) A list and analysis of the contract requirements that must be changed if the VECP is accepted, including any suggested specification revisions.

(3) A separate, detailed cost estimate for

(i) the affected portions of the existing contract requirement and

(ii) the VECP. The cost reduction associated with the VECP shall take into account the Contractor's allowable development and implementation costs, including any amount attributable to subcontracts under paragraph (h) below.

(4) A description and estimate of costs the Government may incur in implementing the VECP, such as test and evaluation and operating and support costs.

(5) A prediction of any effects the proposed change would have on collateral costs to the agency.

(6) A statement of the time by which a contract modification accepting the VECP must be issued in order to achieve the maximum cost reduction, noting any effect on the contract completion time or delivery schedule.

(7) Identification of any previous submissions of the VECP, including the dates submitted, the agencies and contract numbers involved, and previous Government actions, if known.

(d) Submission. The Contractor shall submit VECP's to the Resident Engineer at the worksite, with a copy to the Contracting Officer.

(e) Government action.

(1) The Contracting Officer will notify the Contractor of the status of the VECP within 45 calendar days after the contracting office receives it. If additional time is required, the Contracting Officer will notify the Contractor within the 45-day period and provide the reason for the delay and the expected date of the decision. The Government will process VECP's expeditiously; however, it shall not be liable for any delay in acting upon a VECP.

If the VECP is not accepted, the Contracting Officer will notify the Contractor in writing, explaining the reasons for rejection. The Contractor may withdraw any VECP, in whole or in part, at any time before it is accepted by the Government. The Contracting Officer may require that the Contractor provide written notification before undertaking significant expenditures for VECP effort.

Any VECP may be accepted, in whole or in part, by the Contracting Officer's award of a modification to this contract citing this clause. The Contracting Officer may accept the VECP, even though an agreement

on price reduction has not been reached, by issuing the Contractor a notice to proceed with the change. Until a notice to proceed is issued or a contract modification applies a VECP to this contract, the Contractor shall perform in accordance with the existing contract. The decision to accept or reject all or part of any VECP is a unilateral decision made solely at the discretion of the Contracting Officer.

(f) Sharing.

(1) Rates. The Government's share of savings is determined by subtracting Government costs from instant contract savings and multiplying the result by

(i) 45 percent for fixed-price contracts or

(ii) 75 percent for cost-reimbursement contracts.

(2) Payment. Payment of any share due the Contractor for use of a VECP on this contract shall be authorized by a modification to this contract to--

(i) Accept the VECP;

(ii) Reduce the contract price or estimated cost by the amount of instant contract savings; and

(iii) Provide the Contractor's share of savings by adding the amount calculated to the contract price or fee.

(g) Collateral savings. If a VECP is accepted, the Contracting Officer will increase the instant contract amount by 20 percent of any projected collateral savings determined to be realized in a typical year of use after subtracting any Government costs not previously offset. However, the Contractor's share of collateral savings will not exceed the contract's firm-fixed-price or estimated cost, at the time the VECP is accepted, or $100,000, whichever is greater. The Contracting Officer is the sole determiner of the amount of collateral savings.

(h) Subcontracts. The Contractor shall include an appropriate value engineering clause in any subcontract of $50,000 or more and may include one in subcontracts of lesser value. In computing any adjustment in this contract's price under paragraph (f) above, the Contractor's allowable development and implementation costs shall include any subcontractor's allowable development and implementation costs clearly resulting from a VECP accepted by the Government under this contract, but shall exclude any value engineering incentive payments to a subcontractor. The Contractor may choose any arrangement for subcontractor value engineering incentive payments; provided, that these payments shall not reduce the Government's share of the savings resulting from the VECP.

(i) Data. The Contractor may restrict the Government's right to use any part of a VECP or the supporting data by marking the following legend on the affected parts:

"These data, furnished under the Value Engineering-- Construction clause of contract _____ , shall not be disclosed outside the Government or duplicated, used, or disclosed, in whole or in part, for any purpose other than to evaluate a value engineering change proposal submitted under the clause. This restriction does not limit the Government's right to use information contained in these data if it has been obtained or is otherwise available from the Contractor or from another source without limitations." If a VECP is accepted, the Contractor hereby grants the Government unlimited rights in the VECP and supporting data, except that, with respect to data qualifying and submitted as limited rights technical data, the Government shall have the rights specified in the contract modification implementing the VECP and shall appropriately mark the data. (The terms "unlimited rights" and "limited rights" are defined in Part 27 of the Federal Acquisition Regulation.)

(End of clause)

52.249-2 TERMINATION FOR CONVENIENCE OF THE GOVERNMENT (FIXED-PRICE) (SEP 1996)

(a) The Government may terminate performance of work under this contract in whole or, from time to time, in part if the Contracting Officer determines that a termination is in the Government's interest. The Contracting Officer shall terminate by delivering to the Contractor a Notice of Termination specifying the extent of termination and the effective date.

(b) After receipt of a Notice of Termination, and except as directed by the Contracting Officer, the Contractor shall immediately proceed with the following obligations, regardless of any delay in determining or adjusting any amounts due under this clause:

(1) Stop work as specified in the notice.

(2) Place no further subcontracts or orders (referred to as subcontracts in this clause) for materials, services, or facilities, except as necessary to complete the continued portion of the contract.

(3) Terminate all subcontracts to the extent they relate to the work terminated.

(4) Assign to the Government, as directed by the Contracting Officer, all right, title, and interest of the Contractor under the subcontracts terminated, in which case the Government shall have the right to settle or to pay any termination settlement proposal arising out of those terminations.

(5) With approval or ratification to the extent required by the Contracting Officer, settle all outstanding liabilities and termination settlement proposals arising from the termination of subcontracts; the approval or ratification will be final for purposes of this clause.

(6) As directed by the Contracting Officer, transfer title and deliver to the Government (i) the fabricated or unfabricated parts, work in process, completed work, supplies, and other material produced or acquired for the work terminated, and (ii) the completed or partially

completed plans, drawings, information, and other property that, if the contract had been completed, would be required to be furnished to the Government.

(7) Complete performance of the work not terminated.

(8) Take any action that may be necessary, or that the Contracting Officer may direct, for the protection and preservation of the property related to this contract that is in the possession of the Contractor and in which the Government has or may acquire an interest.

(9) Use its best efforts to sell, as directed or authorized by the Contracting Officer, any property of the types referred to in subparagraph (b)(6) of this clause; provided, however, that the Contractor (i) is not required to extend credit to any purchaser and (ii) may acquire the property under the conditions prescribed by, and at prices approved by, the Contracting Officer. The proceeds of any transfer or disposition will be applied to reduce any payments to be made by the Government under this contract, credited to the price or cost of the work, or paid in any other manner directed by the Contracting Officer.

(c) The Contractor shall submit complete termination inventory schedules no later than 120 days from the effective date of termination, unless extended in writing by the Contracting Officer upon written request of the Contractor within this 120-day period.

(d) After expiration of the plant clearance period as defined in Subpart 45.6 of the Federal Acquisition Regulation, the Contractor may submit to the Contracting Officer a list, certified as to quantity and quality, of termination inventory not previously disposed of, excluding items authorized for disposition by the Contracting Officer. The Contractor may request the Government to remove those items or enter into an agreement for their storage. Within 15 days, the Government will accept title to those items and remove them or enter into a storage agreement. The Contracting Officer may verify the list upon removal of the items, or if stored, within 45 days from submission of the list, and shall correct the list, as necessary, before final settlement.

(e) After termination, the Contractor shall submit a final termination settlement proposal to the Contracting Officer in the form and with the certification prescribed by the Contracting Officer. The Contractor shall submit the proposal promptly, but no later than 1 year from the effective date of termination, unless extended in writing by the Contracting Officer upon written request of the Contractor within this 1-year period. However, if the Contracting Officer determines that the facts justify it, a termination settlement proposal may be received and acted on after 1 year or any extension. If the Contractor fails to submit the proposal within the time allowed, the Contracting Officer may determine, on the basis of information available, the amount, if any, due the Contractor because of the termination and shall pay the amount determined.

(f) Subject to paragraph (e) of this clause, the Contractor and the Contracting Officer may agree upon the whole or any part of the amount to be paid or remaining to be paid because of the termination. The

amount may include a reasonable allowance for profit on work done. However, the agreed amount, whether under this paragraph (g) or paragraph (g) of this clause, exclusive of costs shown in subparagraph (g)(3) of this clause, may not exceed the total contract price as reduced by (1) the amount of payments previously made and (2) the contract price of work not terminated. The contract shall be modified, and the Contractor paid the agreed amount. Paragraph (g) of this clause shall not limit, restrict, or affect the amount that may be agreed upon to be paid under this paragraph.

(g) If the Contractor and the Contracting Officer fail to agree on the whole amount to be paid because of the termination of work, the Contracting Officer shall pay the Contractor the amounts determined by the Contracting Officer as follows, but without duplication of any amounts agreed on under paragraph (f) of this clause:

(1) The contract price for completed supplies or services accepted by the Government (or sold or acquired under subparagraph (b)(9) of this clause) not previously paid for, adjusted for any saving of freight and other charges.

(2) The total of--

(i) The costs incurred in the performance of the work terminated, including initial costs and preparatory expense allocable thereto, but excluding any costs attributable to supplies or services paid or to be paid under subparagraph (f)(1) of this clause;

(ii) The cost of settling and paying termination settlement proposals under terminated subcontracts that are properly chargeable to the terminated portion of the contract if not included in subdivision (g)(2)(i) of this clause; and

(iii) A sum, as profit on subdivision (g)(2)(i) of this clause, determined by the Contracting Officer under 49.202 of the Federal Acquisition Regulation, in effect on the date of this contract, to be fair and reasonable; however, if it appears that the Contractor would have sustained a loss on the entire contract had it been completed, the Contracting Officer shall allow no profit under this subdivision (iii) and shall reduce the settlement to reflect the indicated rate of loss.

(3) The reasonable costs of settlement of the work terminated, including--

(i) Accounting, legal, clerical, and other expenses reasonably necessary for the preparation of termination settlement proposals and supporting data;

(ii) The termination and settlement of subcontracts (excluding the amounts of such settlements); and

(iii) Storage, transportation, and other costs incurred, reasonably necessary for the preservation, protection, or disposition of the termination inventory.

(h) Except for normal spoilage, and except to the extent that the Government expressly assumed the risk of loss, the Contracting Officer

shall exclude from the amounts payable to the Contractor under paragraph (g) of this clause, the fair value, as determined by the Contracting Officer, of property that is destroyed, lost, stolen, or damaged so as to become undeliverable to the Government or to a buyer.

(i) The cost principles and procedures of Part 31 of the Federal Acquisition Regulation, in effect on the date of this contract, shall govern all costs claimed, agreed to, or determined under this clause.

(j) The Contractor shall have the right of appeal, under the Disputes clause, from any determination made by the Contracting Officer under paragraph (e), (g), or (l) of this clause, except that if the Contractor failed to submit the termination settlement proposal or request for equitable adjustment within the time provided in paragraph (e) or (l), respectively, and failed to request a time extension, there is no right of appeal.

(k) In arriving at the amount due the Contractor under this clause, there shall be deducted--

(1) All unliquidated advance or other payments to the Contractor under the terminated portion of this contract;

(2) Any claim which the Government has against the Contractor under this contract; and

(3) The agreed price for, or the proceeds of sale of, materials, supplies, or other things acquired by the Contractor or sold under the provisions of this clause and not recovered by or credited to the Government.

(l) If the termination is partial, the Contractor may file a proposal with the Contracting Officer for an equitable adjustment of the price(s) of the continued portion of the contract. The Contracting Officer shall make any equitable adjustment agreed upon. Any proposal by the Contractor for an equitable adjustment under this clause shall be requested within 90 days from the effective date of termination unless extended in writing by the Contracting Officer.

(m)(1) The Government may, under the terms and conditions it prescribes, make partial payments and payments against costs incurred by the Contractor for the terminated portion of the contract, if the Contracting Officer believes the total of these payments will not exceed the amount to which the Contractor will be entitled.

(2) If the total payments exceed the amount finally determined to be due, the Contractor shall repay the excess to the Government upon demand, together with interest computed at the rate established by the Secretary of the Treasury under 50 U.S.C. App. 1215(b)(2). Interest shall be computed for the period from the date the excess payment is received by the Contractor to the date the excess is repaid. Interest shall not be charged on any excess payment due to a reduction in the Contractor's termination settlement proposal because of retention or other disposition of termination inventory until 10 days after the date of the retention or disposition, or a later date determined by the Contracting Officer because of the circumstances.

(n) Unless otherwise provided in this contract or by statute, the Contractor shall maintain all records and documents relating to the terminated portion of this contract for 3 years after final settlement. This includes all books and other evidence bearing on the Contractor's costs and expenses under this contract. The Contractor shall make these records and documents available to the Government, at the Contractor's office, at all reasonable times, without any direct charge. If approved by the Contracting Officer, photographs, microphotographs, or other authentic reproductions may be maintained instead of original records and documents.

(End of clause)

52.249-10 DEFAULT (FIXED-PRICE CONSTRUCTION) (APR 1984)

(a) If the Contractor refuses or fails to prosecute the work or any separable part, with the diligence that will insure its completion within the time specified in this contract including any extension, or fails to complete the work within this time, the Government may, by written notice to the Contractor, terminate the right to proceed with the work (or the separable part of the work) that has been delayed. In this event, the Government may take over the work and complete it by contract or otherwise, and may take possession of and use any materials, appliances, and plant on the work site necessary for completing the work. The Contractor and its sureties shall be liable for any damage to the Government resulting from the Contractor's refusal or failure to complete the work within the specified time, whether or not the Contractor's right to proceed with the work is terminated. This liability includes any increased costs incurred by the Government in completing the work.

(b) The Contractor's right to proceed shall not be terminated nor the Contractor charged with damages under this clause, if--

(1) The delay in completing the work arises from unforeseeable causes beyond the control and without the fault or negligence of the Contractor. Examples of such causes include

(i) acts of God or of the public enemy,

(ii) acts of the Government in either its sovereign or contractual capacity,

(iii) acts of another Contractor in the performance of a contract with the Government,

(iv) fires,

(v) floods,

(vi) epidemics,

(vii) quarantine restrictions,

(viii) strikes,

(ix) freight embargoes,

(x) unusually severe weather, or delays of subcontractors or suppliers at any tier arising from unforeseeable causes beyond the control and without the fault or negligence of both the Contractor and the subcontractors or suppliers; and

(2) The Contractor, within 10 days from the beginning of any delay (unless extended by the Contracting Officer), notifies the Contracting Officer in writing of the causes of delay. The Contracting Officer shall ascertain the facts and the extent of delay. If, in the judgment of the Contracting Officer, the findings of fact warrant such action, the time for completing the work shall be extended. The findings of the Contracting Officer shall be final and conclusive on the parties, but subject to appeal under the Disputes clause.

(c) If, after termination of the Contractor's right to proceed, it is determined that the Contractor was not in default, or that the delay was excusable, the rights and obligations of the parties will be the same as if the termination had been issued for the convenience of the Government.

The rights and remedies of the Government in this clause are in addition to any other rights and remedies provided by law or under this contract.

(End of clause)

52.252-2 CLAUSES INCORPORATED BY REFERENCE (FEB 1998)

This contract incorporates one or more clauses by reference, with the same force and effect as if they were given in full text. Upon request, the Contracting Officer will make their full text available. Also, the full text of a clause may be accessed electronically at this/these address(es):

[Insert one or more Internet addresses]

(End of clause)

52.252-4 ALTERATIONS IN CONTRACT (APR 1984)

Portions of this contract are altered as follows:

(End of clause)

52.252-6 AUTHORIZED DEVIATIONS IN CLAUSES (APR 1984)

(a) The use in this solicitation or contract of any Federal Acquisition Regulation (48 CFR Chapter 1) clause with an authorized deviation is indicated by the addition of "(DEVIATION)" after the date of the clause.

The use in this solicitation or contract of any _____ (48 CFR _____) clause with an authorized deviation is indicated by the addition of "(DEVIATION)" after the name of the regulation.

52.253-1 COMPUTER GENERATED FORMS (JAN 1991)

(a) Any data required to be submitted on a Standard or Optional Form prescribed by the Federal Acquisition Regulation (FAR) may be submitted on a computer generated version of the form, provided there is no change to the name, content, or sequence of the data elements on the form, and provided the form carries the Standard or Optional Form number and edition date.

(b) Unless prohibited by agency regulations, any data required to be submitted on an agency unique form prescribed by an agency supplement to the FAR may be submitted on a computer generated version of the form provided there is no change to the name, content, or sequence of the data elements on the form and provided the form carries the agency form number and edition date.

If the Contractor submits a computer generated version of a form that is different than the required form, then the rights and obligations of the parties will be determined based on the content of the required form.

(End of clause)

252.201-7000 CONTRACTING OFFICER'S REPRESENTATIVE (DEC 1991)

(a) "Definition. Contracting officer's representative" means an individual designated in accordance with subsection 201.602-2 of the Defense Federal Acquisition Regulation Supplement and authorized in writing by the contracting officer to perform specific technical or administrative functions.

(b) If the Contracting Officer designates a contracting officer's representative (COR), the Contractor will receive a copy of the written designation. It will specify the extent of the COR's authority to act on behalf of the contracting officer. The COR is not authorized to make any commitments or changes that will affect price, quality, quantity, delivery, or any other term or condition of the contract.

(End of clause)

252.203-7001 PROHIBITION ON PERSONS CONVICTED OF FRAUD OR OTHER DEFENSE-CONTRACT-RELATED FELONIES (MAR 1999)

(a) Definitions. As used in this clause—

(1) "Arising out of a contract with the DoD" means any act in connection with—

(i) Attempting to obtain;

(ii) Obtaining, or

(iii) Performing a contract or first-tier subcontract of any agency, department, or component of the Department of Defense (DoD).

(2) "Conviction of fraud or any other felony" means any conviction for fraud or a felony in violation of state or Federal criminal statutes, whether entered on a verdict or plea, including a plea of *nolo contendere*, for which sentence has been imposed.

(3) "Date of conviction" means the date judgment was entered against the individual.

(b) Any individual who is convicted after September 29, 1988, of fraud or any other felony arising out of a contract with the DoD is prohibited from serving--

(1) In a management or supervisory capacity on any DoD contract or first-tier subcontract;

(2) On the board of directors of any DoD contractor or first-tier subcontractor;

(3) As a consultant, agent, or representative for any DoD contractor or first-tier subcontractor; or

(4) In any other capacity with the authority to influence, advise, or control the decisions of any DoD contractor or subcontractor with regard to any DoD contract or first-tier subcontract.

(c) Unless waived, the prohibition in paragraph (b) of this clause applies for not less than 5 years from the date of conviction.

(d) 10 U.S.C. 2408 provides that a defense contractor or first-tier subcontractor shall be subject to a criminal penalty of not more than $500,000 if convicted of knowingly—

(1) Employing a person under a prohibition specified in paragraph (b) of this clause; or

(2) Allowing such a person to serve on the board of directors of the contractor or first-tier subcontractor.

(e) In addition to the criminal penalties contained in 10 U.S.C. 2408, the Government may consider other available remedies, such as—

(1) Suspension or debarment;

(2) Cancellation of the contract at no cost to the Government; or

(3) Termination of the contract for default.

(f) The Contractor may submit written requests for waiver of the prohibition in paragraph (b) of this clause to the Contracting Officer. Requests shall clearly identify—

(1) The person involved;

(2) The nature of the conviction and resultant sentence or punishment imposed;

(3) The reasons for the requested waiver; and

(4) An explanation of why a waiver is in the interest of national security.

(g) The Contractor agrees to include the substance of this clause, appropriately modified to reflect the identity and relationship of the parties, in all first-tier subcontracts exceeding the simplified acquisition threshold in Part 2 of the Federal Acquisition Regulation, except those for commercial items or components.

(h) Pursuant to 10 U.S.C. 2408(c), defense contractors and subcontractors may obtain information as to whether a particular person has been convicted of fraud or any other felony arising out of a contract with the DoD by contacting The Office of Justice Programs, The Denial of Federal Benefits Office, U.S. Department of Justice, telephone (202) 616-3507.

(End of clause)

252.203-7002 DISPLAY OF DOD HOTLINE POSTER (DEC 1991)

(a) The Contractor shall display prominently in common work areas within business segments performing work under Department of Defense (DoD) contracts, DoD Hotline Posters prepared by the DoD Office of the Inspector General.

(b) DoD Hotline Posters may be obtained from the DoD Inspector General, ATTN: Defense Hotline, 400 Army Navy Drive, Washington, DC 22202-2884.

The Contractor need not comply with paragraph (a) of this clause if it has established a mechanism, such as a hotline, by which employees may report suspected instances of improper conduct, and instructions that encourage employees to make such reports.

(End of clause)

252.204-7000 DISCLOSURE OF INFORMATION (DEC 1991)

(a) The Contractor shall not release to anyone outside the Contractor's organization any unclassified information, regardless of medium (e.g., film, tape, document), pertaining to any part of this contract or any program related to this contract, unless--

(1) The Contracting Officer has given prior written approval; or

(2) The information is otherwise in the public domain before the date of release.

(b) Requests for approval shall identify the specific information to be released, the medium to be used, and the purpose for the release. The Contractor shall submit its request to the Contracting Officer at least 45 days before the proposed date for release.

(c) The Contractor agrees to include a similar requirement in each subcontract under this contract. Subcontractors shall submit requests for authorization to release through the prime contractor to the Contracting Officer.

(End of clause)

252.205-7000 PROVISION OF INFORMATION TO COOPERATIVE AGREEMENT HOLDERS (DEC 1991)

(a) Definition.

"Cooperative agreement holder" means a State or local government; a private, nonprofit organization; a tribal organization (as defined in section 4(c) of the Indian Self-Determination and Education Assistance Act (Pub. L. 93-268; 25 U.S.C. 450 (c))); or an economic enterprise (as defined in section 3(e) of the Indian Financing Act of 1974 (Pub. L. 93-362; 25 U.S.C. 1452(e))) whether such economic enterprise is organized for profit or nonprofit purposes; which has an agreement with the Defense Logistics Agency to furnish procurement technical assistance to business entities.

(b) The Contractor shall provide cooperative agreement holders, upon their request, with a list of those appropriate employees or offices responsible for entering into subcontracts under defense contracts. The list shall include the business address, telephone number, and area of responsibility of each employee or office.

(c) The Contractor need not provide the listing to a particular cooperative agreement holder more frequently than once a year.

(End of clause)

252.209-7000 ACQUISITION FROM SUBCONTRACTORS SUBJECT TO ONSITE INSPECTION UNDER THE INTERMEDIATE-RANGE NUCLEAR FORCES (INF) TREATY (NOV 1995)

(a) The Contractor shall not deny consideration for a subcontract award under this contract to a potential subcontractor subject to on-site inspection under the INF Treaty, or a similar treaty, solely or in part because of the actual or potential presence of Soviet inspectors at the subcontractor's facility, unless the decision is approved by the Contracting Officer.

(b) The Contractor shall incorporate this clause, including this paragraph (b), in all solicitations and contracts exceeding the simplified acquisition threshold in part 13 of the Federal Acquisition Regulation, except those for commercial items.

(End of clause)

252.223-7004 DRUG-FREE WORK FORCE (SEP 1988)

(a) Definitions.

(1) "Employee in a sensitive position," as used in this clause, means an employee who has been granted access to classified information; or employees in other positions that the Contractor determines involve

national security; health or safety, or functions other than the foregoing requiring a high degree of trust and confidence.

(2) "Illegal drugs," as used in this clause, means controlled substances included in Schedules I and II, as defined by section 802(6) of title 21 of the United States Code, the possession of which is unlawful under chapter 13 of that Title. The term "illegal drugs" does not mean the use of a controlled substance pursuant to a valid prescription or other uses authorized by law.

(b) The Contractor agrees to institute and maintain a program for achieving the objective of a drug-free work force. While this clause defines criteria for such a program, contractors are encouraged to implement alternative approaches comparable to the criteria in paragraph (c) that are designed to achieve the objectives of this clause.

(c) Contractor programs shall include the following, or appropriate alternatives:

(1) Employee assistance programs emphasizing high level direction, education, counseling, rehabilitation, and coordination with available community resources;

(2) Supervisory training to assist in identifying and addressing illegal drug use by Contractor employees;

(3) Provision for self-referrals as well as supervisory referrals to treatment with maximum respect for individual confidentiality consistent with safety and security issues;

(4) Provision for identifying illegal drug users, including testing on a controlled and carefully monitored basis. Employee drug testing programs shall be established taking account of the following:

(i) The Contractor shall establish a program that provides for testing for the use of illegal drugs by employees in sensitive positions. The extent of and criteria for such testing shall be determined by the Contractor based on considerations that include the nature of the work being performed under the contract, the employee's duties, and efficient use of Contractor resources, and the risks to health, safety, or national security that could result from the failure of an employee adequately to discharge his or her position.

(ii) In addition, the Contractor may establish a program for employee drug testing--

(A) When there is a reasonable suspicion that an employee uses illegal drugs; or

(B) When an employee has been involved in an accident or unsafe practice;

(C) As part of or as a follow-up to counseling or rehabilitation for illegal drug use;

(D) As part of a voluntary employee drug testing program.

(iii) The Contractor may establish a program to test applicants for employment for illegal drug use.

(iv) For the purpose of administering this clause, testing for illegal drugs may be limited to those substances for which testing is prescribed by section 2.1 of subpart B of the "Mandatory Guidelines for Federal Workplace Drug Testing Programs" (53 FR 11980 (April 11, 1988), issued by the Department of Health and Human Services.

(d) Contractors shall adopt appropriate personnel procedures to deal with employees who are found to be using drugs illegally. Contractors shall not allow any employee to remain on duty or perform in a sensitive position who is found to use illegal drugs until such times as the Contractor, in accordance with procedures established by the Contractor, determines that the employee may perform in such a position.

(e) The provisions of this clause pertaining to drug testing program shall not apply to the extent that are inconsistent with state or local law, or with an existing collective bargaining agreement; provided that with respect to the latter, the Contractor agrees those issues that are in conflict will be a subject of negotiation at the next collective bargaining session.

(End of clause)

252.225-7012 PREFERENCE FOR CERTAIN DOMESTIC COMMODITIES (APR 2002)

(a) Definitions. As used in this clause--

(1) Component means any item supplied to the Government as part of an end product or of another component.

(2) End product means supplies delivered under a line item of this contract.

(b) The Contractor shall deliver under this contract only such of the following items, either as end products or components, that have been grown, reprocessed, reused, or produced in the United States, its possessions, or Puerto Rico:

(1) Food.

(2) Clothing.

(3) Tents, tarpaulins, or covers.

(4) Cotton and other natural fiber products.

(5) Woven silk or woven silk blends.

(6) Spun silk yarn for cartridge cloth.

(7) Synthetic fabric, and coated synthetic fabric, including all textile fibers and yarns that are for use in such fabrics.

(8) Canvas products.

(9) Wool (whether in the form of fiber or yarn or contained in fabrics, materials, or manufactured articles).

(10) Any item of individual equipment (Federal Supply Class 8465) manufactured from or containing fibers, yarns, fabrics, or materials listed in this paragraph (b).

(c) This clause does not apply--

(1) To items listed in section 25.104(a) of the Federal Acquisition Regulation (FAR), or other items for which the Government has determined that a satisfactory quality and sufficient quantity cannot be acquired as and when needed at U.S. market prices;

(2) To end products incidentally incorporating cotton, other natural fibers, or wool, for which the estimated value of the cotton, other natural fibers, or wool--

(i) Is not more than 10 percent of the total price of the end product; and (ii) Does not exceed the simplified acquisition threshold in FAR part 2;

(3) To foods that have been manufactured or processed in the United States, its possessions, or Puerto Rico, regardless of where the foods (and any component if applicable) were grown or produced;

(4) To chemical warfare protective clothing produced in the countries listed in subsection 225.872-1 of the Defense FAR Supplement; or

(5) To fibers and yarns that are for use in synthetic fabric or coated synthetic fabric (but does apply to the synthetic or coated synthetic fabric itself), if--

(i) The fabric is to be used as a component of an end product that is not a textile product. Examples of textile products, made in whole or in part of fabric, include--

(A) Draperies, floor coverings, furnishings, and bedding (Federal Supply Group 72, Household and Commercial Furnishings and Appliances);

(B) Items made in whole or in part of fabric in Federal Supply Group 83, Textile/leather/furs/apparel/findings/ tents/flags, or Federal Supply Group 84, Clothing, Individual Equipment and Insignia;

(C) Upholstered seats (whether for household, office, or other use); and

(D) Parachutes (Federal Supply Class 1670); or

(ii) The fibers and yarns are para-aramid fibers and yarns manufactured in the Netherlands.

(End of clause)

252.225-7031 SECONDARY ARAB BOYCOTT OF ISRAEL (JUN 1992)

(a) Definitions. As used in this clause--

(1) "Foreign person" means any person other than a United States person as defined in Section 16(2) of the Export Administration Act of 1979 (50 U.S.C. App. Sec 2415).

(2) "United States person" is defined in Section 16(2) of the Export Administration Act of 1979 and means any United States resident or national (other than an individual resident outside the United States and employed by other than a United States person), any domestic concern (including any permanent domestic establishment of any foreign concern), and any foreign subsidiary or affiliate (including any permanent foreign establishment) of any domestic concern which is controlled in fact by such domestic concerns, as determined under regulations of the President.

(b) Certification. By submitting this offer, the Offeror, if a foreign person, company or entity, certifies that it--

(1) Does not comply with the Secondary Arab Boycott of Israel; and

(2) Is not taking or knowingly agreeing to take any action, with respect to the Secondary Boycott of Israel by Arab countries, which 50 U.S.C. App. Sec 2407(a) prohibits a United States person from taking.

(End of clause)

252.227-7000 NON-ESTOPPEL (OCT 1966)

The Government reserves the right at any time to contest the enforceability, validity, scope of, or the title to any patent or patent application herein licensed without waiving or forfeiting any right under this contract.

(End of clause)

252.227-7022 GOVERNMENT RIGHTS (UNLIMITED) (MAR 1979)

The Government shall have unlimited rights, in all drawings, designs, specifications, notes and other works developed in the performance of this contract, including the right to use same on any other Government design or construction without additional compensation to the Contractor. The Contractor hereby grants to the Government a paid-up license throughout the world to all such works to which he may assert or establish any claim under design patent or copyright laws. The Contractor for a period of three (3) years after completion of the project agrees to furnish the original or copies of all such works on the request of the Contracting Officer.

(End of clause)

252.227-7023 DRAWINGS AND OTHER DATA TO BECOME PROPERTY OF GOVERNMENT (MAR 1979)

All designs, drawings, specifications, notes and other works developed in the performance of this contract shall become the sole property of

the Government and may be used on any other design or construction without additional compensation to the Contractor. The Government shall be considered the "person for whom the work was prepared" for the purpose of authorship in any copyrightable work under 17 U.S.C. 201(b). With respect thereto, the Contractor agrees not to assert or authorize others to assert any rights nor establish any claim under the design patent or copyright laws. The Contractor for a period of three (3) years after completion of the project agrees to furnish all retained works on the request of the Contracting Officer. Unless otherwise provided in this contract, the Contractor shall have the right to retain copies of all works beyond such period.

(End of clause)

252.227-7033 RIGHTS IN SHOP DRAWINGS (APR 1966)

(a) Shop drawings for construction means drawings, submitted to the Government by the Construction Contractor, subcontractor or any lower-tier subcontractor pursuant to a construction contract, showing in detail (i) the proposed fabrication and assembly of structural elements and (ii) the installation (i.e., form, fit, and attachment details) of materials or equipment. The Government may duplicate, use, and disclose in any manner and for any purpose shop drawings delivered under this contract.

(b) This clause, including this paragraph (b), shall be included in all subcontracts hereunder at any tier.

(End of clause)

252.231-7000 SUPPLEMENTAL COST PRINCIPLES (DEC 1991)

When the allowability of costs under this contract is determined in accordance with part 31 of the Federal Acquisition Regulation (FAR), allowability shall also be determined in accordance with part 231 of the Defense FAR Supplement, in effect on the date of this contract.

(End of clause)

252.236-7000 MODIFICATION PROPOSALS - PRICE BREAKDOWN (DEC 1991)

(a) The Contractor shall furnish a price breakdown, itemized as required and within the time specified by the Contracting Officer, with any proposal for a contract modification.

(b) The price breakdown --

(1) Must include sufficient detail to permit an analysis of profit, and of all costs for --

(i) Material;

(ii) Labor;

(iii) Equipment;

(iv) Subcontracts; and

(v) Overhead; and

(2) Must cover all work involved in the modification, whether the work was deleted, added, or changed.

(c) The Contractor shall provide similar price breakdowns to support any amounts claimed for subcontracts.

(d) The Contractor's proposal shall include a justification for any time extension proposed.

(End of clause)

252.236-7008 CONTRACT PRICES - BIDDING SCHEDULES (DEC 1991)

(a) The Government's payment for the items listed in the Bidding Schedule shall constitute full compensation to the Contractor for --

(1) Furnishing all plant, labor, equipment, appliances, and materials; and

(2) Performing all operations required to complete the work in conformity with the drawings and specifications.

(b) The Contractor shall include in the prices for the items listed in the Bidding Schedule all costs for work in the specifications, whether or not specifically listed in the Bidding Schedule.

252.242-7000 POSTAWARD CONFERENCE (DEC 1991)

The Contractor agrees to attend any postaward conference convened by the contracting activity or contract administration office in accordance with Federal Acquisition Regulation subpart 42.5.

(End of clause)

252.243-7001 PRICING OF CONTRACT MODIFICATIONS (DEC 1991)

When costs are a factor in any price adjustment under this contract, the contract cost principles and procedures in FAR part 31 and DFARS part 231, in effect on the date of this contract, apply.

(End of clause)

252.243-7002 REQUESTS FOR EQUITABLE ADJUSTMENT (MAR 1998)

(a) The amount of any request for equitable adjustment to contract terms shall accurately reflect the contract adjustment for which the Contractor believes the Government is liable. The request shall include only costs for performing the change, and shall not include any costs that already have been reimbursed or that have been separately claimed. All indirect costs included in the request shall be properly allocable to the change in accordance with applicable acquisition regulations.

(b) In accordance with 10 U.S.C. 2410(a), any request for equitable adjustment to contract terms that exceeds the simplified acquisition threshold shall bear, at the time of submission, the following

certificate executed by an individual authorized to certify the request on behalf of the Contractor:

I certify that the request is made in good faith, and that the supporting data are accurate and complete to the best of my knowledge and belief.

(Official's Name)

(Title)

(c) The certification in paragraph (b) of this clause requires full disclosure of all relevant facts, including--

(1) Cost or pricing data if required in accordance with subsection 15.403-4 of the Federal Acquisition Regulation (FAR); and

(2) Information other than cost or pricing data, in accordance with subsection 15.403-3 of the FAR, including actual cost data and data to support any estimated costs, even if cost or pricing data are not required.

(d) The certification requirement in paragraph (b) of this clause does not apply to----

(1) Requests for routine contract payments; for example, requests for payment for accepted supplies and services, routine vouchers under a cost-reimbursement type contract, or progress payment invoices; or

(2) Final adjustment under an incentive provision of the contract.

(End of clause)

252.247-7004 INDEFINITE QUANTITIES - FIXED CHARGES (DEC 1991)

The amount of work and services the Contractor may be ordered to furnish shall be the amount the Contracting Officer may order from time to time. In any event, the Government is obligated to compensate the Contractor the monthly lump sum specified in the Schedule entitled Fixed Charges, for each month or portion of a month the contract remains in effect.

-- End of Section --

Section 00800 - Special Contract Requirements

CLAUSES INCORPORATED BY FULL TEXT

52.0028-4001 REQUIRED INSURANCE..... 2
52.211-10 COMMENCEMENT, PROSECUTION, AND COMPLETION OF WORK (APR 1984)..... 3
52.211-12 LIQUIDATED DAMAGES--CONSTRUCTION (SEP 2000)..... 3
52.211-18 VARIATION IN ESTIMATED QUANTITY (APR 1984)..... 3
52.222-23 NOTICE OF REQUIREMENT FOR AFFIRMATIVE ACTION TO ENSURE EQUAL EMPLOYMENT OPPORTUNITY FOR CONSTRUCTION (FEB 1999)..... 3
52.228-12 PROSPECTIVE SUBCONTRACTOR REQUESTS FOR BONDS (OCT 1995)..... 5
52.228-14 IRREVOCABLE LETTER OF CREDIT (DEC 1999)..... 5
52.228-15 PERFORMANCE AND PAYMENT BONDS--CONSTRUCTION (JUL 2000)-..... 9
52.232-33 PAYMENT BY ELECTRONIC FUNDS TRANSFER—CENTRAL CONTRACTOR REGISTRATION (MAY 1999)..... 10
52.232-4001 CONTINUING CONTRACTS (ALTERNATE) (MAR 1995) EFARS 52-232-5002. 11
52.236-4 PHYSICAL DATA (APR 1984)..... 13
52.236-16 QUANTITY SURVEYS (APR 1984)..... 13
52.236-21 SPECIFICATIONS AND DRAWINGS FOR CONSTRUCTION (FEB 1997)..... 13
52.236-5000 PLANT AND MATERIAL REMOVAL AFTER CONTRACT TERMINATION (MAR 1995)--EFARS..... 15
52.249-5000 BASIS FOR SETTLEMENT OF PROPOSALS..... 15
252.236-7001 CONTRACT DRAWINGS, MAPS, AND SPECIFICATIONS (AUG 2000)..... 15

SECTION 00800
Special Contract Requirements

52.0001-4001 CONTRACT ADMINISTRATION DATA

The Contract Administration Office for this contract subsequent to award is:

Department of the Army
Los Angeles District, Corps of Engineers
P.O. Box 532711
Los Angeles, California 90053-2325

ATTN: Sandy Oquita

Telephone No: 213 452-3249

Payment will be made by:

USACE Finance Center
ATTN: CEFC-AO-P
5270 Integrity Drive
Millington, TN 38054-5005

Submit Invoices to:

Louis Uptmor
2901 S. Central , Lot B
Phoenix, AZ 85040

52.0028-4001 REQUIRED INSURANCE

Insurance is required as follows:

a. Either Workman's Compensation or Employer's Liability Insurance with a minimum limit of $100,000.00.

b. General Liability. The Contracting Officer shall require bodily injury liability insurance coverage written on the comprehensive form or policy of at least $500,000.00 per occurrence.

c. Automobile Liability Insurance for Bodily Injury and Property Damage with minimum limits of $200,000.00 for injury or death of any one person; $500,000.00 for each accident or occurrence of bodily injury liability; and $20,000.00 for each accident or occurrence for property liability.

d. In every case the insurance coverage shall amount to at least the limits stated above. However, where the Financial Responsibility Compulsory Insurance Law of the State in which the installation is located requires higher limits, the Automobile Liability Insurance Policy should provide coverage of at least those limits.

Prior to the commencement of work hereunder, the Contractor shall furnish to the Contracting Office a certificate or written statement of the above required insurance. The policies evidencing insurance shall contain an endorsement to the effect that cancellation or any material change in the

policies adversely affecting the interests of the Government in such insurance shall not be effective until 10 days after written notice thereof to the Contracting Officer.

The Contractor agrees to insert the substance of this clause, including this paragraph, in all subcontracts

52.211-10 COMMENCEMENT, PROSECUTION, AND COMPLETION OF WORK (APR 1984)

The Contractor shall be required to (a) commence work under this contract within 10 calendar days after the date the Contractor receives the notice to proceed, (b) prosecute the work diligently, and (c) complete the entire work ready for use not later than 360 calendar days after the Contractor receives the Notice to Proceed. The time stated for completion shall include final cleanup of the premises.

(End of clause)

52.211-12 LIQUIDATED DAMAGES--CONSTRUCTION (SEP 2000)

(a) If the Contractor fails to complete the work within the time specified in the contract, the Contractor shall pay liquidated damages to the Government in the amount of $1,655 for each calendar day of delay until the work is completed or accepted.

(b) If the Government terminates the Contractor's right to proceed, liquidated damages will continue to accrue until the work is completed. These liquidated damages are in addition to excess costs of repurchase under the Termination clause.

(End of clause)

52.211-18 VARIATION IN ESTIMATED QUANTITY (APR 1984)

If the quantity of a unit-priced item in this contract is an estimated quantity and the actual quantity of the unit-priced item varies more than 15 percent above or below the estimated quantity, an equitable adjustment in the contract price shall be made upon demand of either party. The equitable adjustment shall be based upon any increase or decrease in costs due solely to the variation above 115 percent or below 85 percent of the estimated quantity. If the quantity variation is such as to cause an increase in the time necessary for completion, the Contractor may request, in writing, an extension of time, to be received by the Contracting Officer within 10 days from the beginning of the delay, or within such further period as may be granted by the Contracting Officer before the date of final settlement of the contract. Upon the receipt of a written request for an extension, the Contracting Officer shall ascertain the facts and make an adjustment for extending the completion date as, in the judgement of the Contracting Officer, is justified.

52.222-23 NOTICE OF REQUIREMENT FOR AFFIRMATIVE ACTION TO ENSURE EQUAL EMPLOYMENT OPPORTUNITY FOR CONSTRUCTION (FEB 1999)

(a) The offeror's attention is called to the Equal Opportunity clause and the Affirmative Action Compliance Requirements for Construction clause of this solicitation.

(b) The goals for minority and female participation, expressed in percentage terms for the Contractor's aggregate workforce in each trade on all construction work in the covered area, are as follows:

Goals for minority participation for each trade	Goals for female participation for each trade
25-30%	6.9%

These goals are applicable to all the Contractor's construction work performed in the covered area. If the Contractor performs construction work in a geographical area located outside of the covered area, the Contractor shall apply the goals established for the geographical area where the work is actually performed. Goals are published periodically in the Federal Register in notice form, and these notices may be obtained from any Office of Federal Contract Compliance Programs office.

(c) The Contractor's compliance with Executive Order 11246, as amended, and the regulations in 41 CFR 60-4 shall be based on (1) its implementation of the Equal Opportunity clause, (2) specific affirmative action obligations required by the clause entitled "Affirmative Action Compliance Requirements for Construction," and (3) its efforts to meet the goals. The hours of minority and female employment and training must be substantially uniform throughout the length of the contract, and in each trade. The Contractor shall make a good faith effort to employ minorities and women evenly on each of its projects. The transfer of minority or female employees or trainees from Contractor to Contractor, or from project to project, for the sole purpose of meeting the Contractor's goals shall be a violation of the contract, Executive Order 11246, as amended, and the regulations in 41 CFR 60-4. Compliance with the goals will be measured against the total work hours performed.

(d) The Contractor shall provide written notification to the Deputy Assistant Secretary for Federal Contract Compliance, U.S. Department of Labor, within 10 working days following award of any construction subcontract in excess of $10,000 at any tier for construction work under the contract resulting from this solicitation. The notification shall list the --

(1) Name, address, and telephone number of the subcontractor;

(2) Employer's identification number of the subcontractor;

(3) Estimated dollar amount of the subcontract;

(4) Estimated starting and completion dates of the subcontract; and

(5) Geographical area in which the subcontract is to be performed.

(e) As used in this Notice, and in any contract resulting from this solicitation, the "covered area" is City of Phoenix, Maricopa County, AZ

(End of provision)

52.228-12 PROSPECTIVE SUBCONTRACTOR REQUESTS FOR BONDS (OCT 1995)

In accordance with Section 806(a)(3) of Pub. L. 102-190, as amended by Sections 2091 and 8105 of Pub. L. 103-355, upon the request of a prospective subcontractor or supplier offering to furnish labor or material for the performance of this contract for which a payment bond has been furnished to the Government pursuant to the Miller Act, the Contractor shall promptly provide a copy of such payment bond to the requester.

(End of clause)

52.228-14 IRREVOCABLE LETTER OF CREDIT (DEC 1999)

(a) "Irrevocable letter of credit" (ILC), as used in this clause, means a written commitment by a federally insured financial institution to pay all or part of a stated amount of money, until the expiration date of the letter, upon presentation by the Government (the beneficiary) of a written demand therefore. Neither the financial institution nor the offeror/Contractor can revoke or condition the letter of credit.

(b) If the offeror intends to use an ILC in lieu of a bid bond, or to secure other types of bonds such as performance and payment bonds, the letter of credit and letter of confirmation formats in paragraphs (e) and (f) of this clause shall be used.

(c) The letter of credit shall be irrevocable, shall require presentation of no document other than a written demand and the ILC (including confirming letter, if any), shall be issued/confirmed by an acceptable federally insured financial institution as provided in paragraph (d) of this clause, and--

(1) If used as a bid guarantee, the ILC shall expire no earlier than 60 days after the close of the bid acceptance period;

(2) If used as an alternative to corporate or individual sureties as security for a performance or payment bond, the offeror/Contractor may submit an ILC with an initial expiration date estimated to cover the entire period for which financial security is required or may submit an ILC with an initial expiration date that is a minimum period of one year from the date of issuance. The ILC shall provide that, unless the issuer provides the beneficiary written notice of non-renewal at least 60 days in advance of the current expiration date, the ILC is automatically extended without amendment for one year from the expiration date, or any future expiration date, until the period of required coverage is completed and the Contracting Officer provides the financial institution with a written statement waiving the right to payment. The period of required coverage shall be:

(i) For contracts subject to the Miller Act, the later of--

(A) One year following the expected date of final payment;

(B) For performance bonds only, until completion of any warranty period; or

(C) For payment bonds only, until resolution of all claims filed against the payment bond during the one-year period following final payment.

(ii) For contracts not subject to the Miller Act, the later of--

(A) 90 days following final payment; or

(B) For performance bonds only, until completion of any warranty period.

(d) Only federally insured financial institutions rated investment grade or higher shall issue or confirm the ILC. The offeror/Contractor shall provide the Contracting Officer a credit rating that indicates the financial institution has the required rating(s) as of the date of issuance of the ILC. Unless the financial institution issuing the ILC had letter of credit business of less than $25 million in the past year, ILCs over $5 million must be confirmed by another acceptable financial institution that had letter of credit business of less than $25 million in the past year.

(e) The following format shall be used by the issuing financial institution to create an ILC:

_____

[Issuing Financial Institution's Letterhead or Name and Address]

Issue Date _____

IRREVOCABLE LETTER OF CREDIT NO. _____

Account party's name _____

Account party's address _____

For Solicitation No. _____(for reference only)

TO: [U.S. Government agency]

[U.S. Government agency's address]

1. We hereby establish this irrevocable and transferable Letter of Credit in your favor for one or more drawings up to United States $_____. This Letter of Credit is payable at [issuing financial institution's and, if any, confirming financial institution's] office at [issuing financial institution's address and, if any, confirming financial institution's address] and expires with our close of business on _____, or any automatically extended expiration date.

2. We hereby undertake to honor your or the transferee's sight draft(s) drawn on the issuing or, if any, the confirming financial institution, for all or any part of this credit if presented with this Letter of Credit and confirmation, if any, at the office specified in paragraph 1 of this Letter of Credit on or before the expiration date or any automatically extended expiration date.

3. [This paragraph is omitted if used as a bid guarantee, and subsequent paragraphs are renumbered.] It is a condition of this Letter of Credit that it is deemed to be automatically extended without amendment for one year from the expiration date hereof, or any future expiration date, unless at least 60 days prior to any expiration date, we notify you or the transferee by registered mail, or other receipted means of delivery, that we elect not to consider this Letter of Credit renewed for any such additional period. At the time we notify you, we also agree to notify the account party (and

confirming financial institution, if any) by the same means of delivery.

4. This Letter of Credit is transferable. Transfers and assignments of proceeds are to be effected without charge to either the beneficiary or the transferee/assignee of proceeds. Such transfer or assignment shall be only at the written direction of the Government (the beneficiary) in a form satisfactory to the issuing financial institution and the confirming financial institution, if any.

5. This Letter of Credit is subject to the Uniform Customs and Practice (UCP) for Documentary Credits, 1993 Revision, International Chamber of Commerce Publication No. 500, and to the extent not inconsistent therewith, to the laws of _____ [state of confirming financial institution, if any, otherwise state of issuing financial institution].

6. If this credit expires during an interruption of business of this financial institution as described in Article 17 of the UCP, the financial institution specifically agrees to effect payment if this credit is drawn against within 30 days after the resumption of our business.

Sincerely,

_____

[Issuing financial institution]

(f) The following format shall be used by the financial institution to confirm an ILC:

_____
[Confirming Financial Institution's Letterhead or Name and Address]

(Date) _____

Our Letter of Credit Advice Number _____

Beneficiary: _____ [U.S. Government agency]

Issuing Financial Institution: _____

Issuing Financial Institution's LC No.: _____

Gentlemen:

1. We hereby confirm the above indicated Letter of Credit, the original of which is attached, issued by _____ [name of issuing financial institution] for drawings of up to United States dollars _____/U.S. $_____ and expiring with our close of business on _____ [the expiration date], or any automatically extended expiration date.

2. Draft(s) drawn under the Letter of Credit and this Confirmation are payable at our office located at _____.

3. We hereby undertake to honor sight draft(s) drawn under and presented with the Letter of Credit and this Confirmation at our offices as specified herein.

4. [This paragraph is omitted if used as a bid guarantee, and subsequent paragraphs are renumbered.] It is a condition of this confirmation that it be deemed automatically extended without amendment for one year from the expiration date hereof, or any automatically extended expiration date, unless:

(a) At least 60 days prior to any such expiration date, we shall notify the Contracting Officer, or the transferee and the issuing financial institution, by registered mail or other receipted means of delivery, that we elect not to consider this confirmation extended for any such additional period; or

(b) The issuing financial institution shall have exercised its right to notify you or the transferee, the account party, and ourselves, of its election not to extend the expiration date of the Letter of Credit.

5. This confirmation is subject to the Uniform Customs and Practice (UCP) for Documentary Credits, 1993 Revision, International Chamber of Commerce Publication No. 500, and to the extent not inconsistent therewith, to the laws of _____ [state of confirming financial institution].

6. If this confirmation expires during an interruption of business of this financial institution as described in Article 17 of the UCP, we specifically agree to effect payment if this credit is drawn against within 30 days after the resumption of our business.

Sincerely,

_____

[Confirming financial institution]

(g) The following format shall be used by the Contracting Officer for a sight draft to draw on the Letter of Credit:

SIGHT DRAFT

_____

[City, State]

(Date) _____

[Name and address of financial institution]

Pay to the order of _____ [Beneficiary Agency] _____ the sum of United States $_____. This draft is drawn under Irrevocable Letter of Credit No. _____.

_____

[Beneficiary Agency]

By: _____

(End of clause)

52.228-15 PERFORMANCE AND PAYMENT BONDS--CONSTRUCTION (JUL 2000)-

(a) Definitions. As used in this clause--

Original contract price means the award price of the contract; or, for requirements contracts, the price payable for the estimated total quantity; or, for indefinite-quantity contracts, the price payable for the specified minimum quantity. Original contract price does not include the price of any options, except those options exercised at the time of contract award.

(b) Amount of required bonds. Unless the resulting contract price is $100,000 or less, the successful offeror shall furnish performance and payment bonds to the Contracting Officer as follows:

(1) Performance bonds (Standard Form 25). The penal amount of performance bonds at the time of contract award shall be 100 percent of the original contract price.

(2) Payment Bonds (Standard Form 25-A). The penal amount of payment bonds at the time of contract award shall be 100 percent of the original contract price.

(3) Additional bond protection.

(i) The Government may require additional performance and payment bond protection if the contract price is increased. The increase in protection generally will equal 100 percent of the increase in contract price.

(ii) The Government may secure the additional protection by directing the Contractor to increase the penal amount of the existing bond or to obtain an additional bond.

(c) Furnishing executed bonds. The Contractor shall furnish all executed bonds, including any necessary reinsurance agreements, to the Contracting Officer, within the time period specified in the Bid Guarantee provision of the solicitation, or otherwise specified by the Contracting Officer, but in any event, before starting work.

(d) Surety or other security for bonds. The bonds shall be in the form of firm commitment, supported by corporate sureties whose names appear on the list contained in Treasury Department Circular 570, individual sureties, or by other acceptable security such as postal money order, certified check, cashier's check, irrevocable letter of credit, or, in accordance with Treasury Department regulations, certain bonds or notes of the United States. Treasury Circular 570 is published in the Federal Register or may be obtained from the U.S. Department of Treasury, Financial Management Service, Surety Bond Branch, 401 14th Street, NW, 2nd Floor, West Wing, Washington, DC 20227.

(e) Notice of subcontractor waiver of protection (40 U.S.C. 270b(c). Any waiver of the right to sue on the payment bond is void unless it is in writing, signed by the person whose right is waived, and executed after such person has first furnished labor or material for use in the performance of the contract.

(End of clause)

52.232-33 PAYMENT BY ELECTRONIC FUNDS TRANSFER—CENTRAL CONTRACTOR REGISTRATION (MAY 1999)

(a) Method of payment. (1) All payments by the Government under this contract shall be made by electronic funds transfer (EFT), except as provided in paragraph (a)(2) of this clause. As used in this clause, the term “EFT” refers to the funds transfer and may also include the payment information transfer.

(2) In the event the Government is unable to release one or more payments by EFT, the Contractor agrees to either--

(i) Accept payment by check or some other mutually agreeable method of payment;or

(ii) Request the Government to extend the payment due date until such time as the Government can make payment by EFT (but see paragraph (d) of this clause).

(b) Contractor's EFT information. The Government shall make payment to the Contractor using the EFT information contained in the Central Contractor Registration (CCR) database. In the event that the EFT information changes, the Contractor shall be responsible for providing the updated information to the CCR database.

(c) Mechanisms for EFT payment. The Government may make payment by EFT through either the Automated Clearing House (ACH) network, subject to the rules of the National Automated Clearing House Association, or the Fedwire Transfer System. The rules governing Federal payments through the ACH are contained in 31 CFR part 210.

(d) Suspension of payment. If the Contractor's EFT information in the CCR database is incorrect, then the Government need not make payment to the Contractor under this contract until correct EFT information is entered into the CCR database; and any invoice or contract financing request shall be deemed not to be a proper invoice for the purpose of prompt payment under this contract. The prompt payment terms of the contract regarding notice of an improper invoice and delays in accrual of interest penalties apply.

(e) Contractor EFT arrangements. If the Contractor has identified multiple payment receiving points (i.e., more than one remittance address and/or EFT information set) in the CCR database, and the Contractor has not notified the Government of the payment receiving point applicable to this contract, the Government shall make payment to the first payment receiving point (EFT information set or remittance address as applicable) listed in the CCR database.

(f) Liability for uncompleted or erroneous transfers. (1) If an uncompleted or erroneous transfer occurs because the Government used the Contractor's EFT information incorrectly, the Government remains responsible for--

(i) Making a correct payment;

(ii) Paying any prompt payment penalty due; and

(iii) Recovering any erroneously directed funds.

(2) If an uncompleted or erroneous transfer occurs because the Contractor's EFT information was incorrect, or was revised within 30 days of Government release of the EFT payment transaction instruction to the Federal Reserve System, and--

(i) If the funds are no longer under the control of the payment office, the Government is deemed to have made payment and the Contractor is responsible for recovery of any erroneously directed funds; or

(ii) If the funds remain under the control of the payment office, the Government shall not make payment, and the provisions of paragraph (d) of this clause shall apply.

(g) EFT and prompt payment. A payment shall be deemed to have been made in a timely manner in accordance with the prompt payment terms of this contract if, in the EFT payment transaction instruction released to the Federal Reserve System, the date specified for settlement of the payment is on or before the prompt payment due date, provided the specified payment date is a valid date under the rules of the Federal Reserve System.

(h) EFT and assignment of claims. If the Contractor assigns the proceeds of this contract as provided for in the assignment of claims terms of this contract, the Contractor shall require as a condition of any such assignment, that the assignee shall register in the CCR database and shall be paid by EFT in accordance with the terms of this clause. In all respects, the requirements of this clause shall apply to the assignee as if it were the Contractor. EFT information that shows the ultimate recipient of the transfer to be other than the Contractor, in the absence of a proper assignment of claims acceptable to the Government, is incorrect EFT information within the meaning of paragraph (d) of this clause.

(i) Liability for change of EFT information by financial agent. The Government is not liable for errors resulting from changes to EFT information made by the Contractor's financial agent.

(j) Payment information. The payment or disbursing office shall forward to the Contractor available payment information that is suitable for transmission as of the date of release of the EFT instruction to the Federal Reserve System. The Government may request the Contractor to designate a desired format and method(s) for delivery of payment information from a list of formats and methods the payment office is capable of executing. However, the Government does not guarantee that any particular format or method of delivery is available at any particular payment office and retains the latitude to use the format and delivery method most convenient to the Government. If the Government makes payment by check in accordance with paragraph (a) of this clause, the Government shall mail the payment information to the remittance address contained in the CCR database.

(End of Clause)

52.232-4001 CONTINUING CONTRACTS (ALTERNATE) (MAR 1995) EFARS 52-232-5002

(a) Funds are not available at the inception of this contract to cover the entire contract price. The sum of 1.5 Million has been reserved for this contract and is available for payment to the contractor during the current fiscal year. It is expected that Congress will make appropriations

for future fiscal years from which additional funds, together with funds provided by one or more non-federal project sponsors will be reserved for this contract. The liability of the United States for payment beyond the funds reserved for this contract is contingent on the reservation of additional funds.

(b) Failure to make payment in excess of the amount currently reserved, or that may be reserved from time to time, shall not be considered a breach of this contract, and shall not entitle the contractor to a price adjustment under the terms of this contract except as specifically provided in paragraphs (e) and (h) below.

(c) The Government may at any time reserve additional funds for payments under the contract if there are funds available for such purpose. The contracting officer will promptly notify the contractor of any additional funds reserved for the contract by issuing and administrative modification to the contract.

(d) If earnings will be such that funds reserved for the contract will be exhausted before the end of any fiscal year, the contractor shall give written notice to the contracting officer of the estimated date of exhaustion and of additional funds which will be needed to meet payments due or to become due under this contract during that fiscal year. This notice shall be given not less than 45 nor more than 60 days prior to the estimated date of exhaustion.

(e) No payments will be made after exhaustion of funds except to the extent that additional funds are reserved for the contract. If and when sufficient additional funds are reserved, the contractor shall be entitled to simple interest on any payment that the contracting officer determines was actually earned under the terms of this contract and would have been made except for exhaustion of funds. Interest shall be computed from the time such payment would otherwise have been made until actually or constructively made, and shall be at the rate established by the Secretary of the Treasury pursuant to Public Law 92-41, 85 Stat 97, as in effect on the first day of the delay in such payment.

(f) Any suspension, delay, or interruption of work arising from exhaustion or anticipated exhaustion of funds shall not constitute a breach of this contract and shall not entitle the contractor to any price adjustment under a "Suspension of Work" or similar clause or in any other manner under this contract.

(g) An equitable adjustment in performance time shall be made for any increase in the time required for performance of any part of the work arising from exhaustion of funds or the reasonable anticipation of exhaustion of funds.

(h) If, upon the expiration of sixty (60) days after the beginning of the fiscal year following an exhaustion of funds, the Government has failed to reserve sufficient additional funds to cover payments otherwise due, the contractor, by written notice delivered to the contracting officer at any time before such additional funds are reserved, may elect to treat his right to proceed with the work as having been terminated. Such a termination shall be at no cost to the Government, except that, to the extent that additional funds to make payment therefore are allocated to this contract, it may be treated as a termination for the convenience of the Government.

(i) If at any time it becomes apparent that the funds reserved for any fiscal year are in excess of the funds required to meet all payments due or to become due the contractor because of work performed and to be performed under this contract during the fiscal year, the Government reserves the right, after notice to the contractor, to reduce said reservation by the amount of such excess.

(j) The term "Reservation" means monies that have been set aside and made available for payments under this contract.

(End of clause)

52.236-4 PHYSICAL DATA (APR 1984)

Data and information furnished or referred to below is for the Contractor's information. The Government shall not be responsible for any interpretation of or conclusion drawn from the data or information by the Contractor.

(a) The indications of physical conditions on the drawings and in the specifications are the result of site investigations by surveys, auger borings, test pits, etc.

(b) Weather conditions. The Contractor shall satisfy himself as to the hazards likely to arise from weather conditions.

(c) Transportation facilities. The Contractor shall make his own investigation of the conditions of existing public and private roads and clearances, restrictions, bridge load limits and other limitations affecting transportation and ingress and egress at the site of the work. The unavailability of transportation facilities or limitations thereof shall not become the basis for claims against the Government or extensions of time for completion of the work.

(End of clause)

52.236-16 QUANTITY SURVEYS (APR 1984)

(a) Quantity surveys shall be conducted, and the data derived from these surveys shall be used in computing the quantities of work performed and the actual construction completed and in place.

(b) The Government shall conduct the original and final surveys and make the computations based on them. The Contractor shall conduct the surveys for any periods for which progress payments are requested and shall make the computations based on these surveys. All surveys conducted by the Contractor shall be conducted under the direction of a representative of the Contracting Officer, unless the Contracting Officer waives this requirement in a specific instance.

(c) Promptly upon completing a survey, the Contractor shall furnish the originals of all field notes and all other records relating to the survey or to the layout of the work to the Contracting Officer, who shall use them as necessary to determine the amount of progress payments. The Contractor shall retain copies of all such material furnished to the Contracting Officer.

(End of clause)

52.236-21 SPECIFICATIONS AND DRAWINGS FOR CONSTRUCTION (FEB 1997)

(a) The Contractor shall keep on the work site a copy of the drawings and specifications and shall at all times give the Contracting Officer access thereto. Anything mentioned in the specifications and not shown on the drawings, or shown on the drawings and not mentioned in the specifications, shall be of like effect as if shown or mentioned in both. In case of difference between drawings and specifications, the specifications shall govern. In case of discrepancy in the figures, in the drawings, or in the

specifications, the matter shall be promptly submitted to the Contracting Officer, who shall promptly make a determination in writing. Any adjustment by the Contractor without such a determination shall be at its own risk and expense. The Contracting Officer shall furnish from time to time such detailed drawings and other information as considered necessary, unless otherwise provided.

(b) Wherever in the specifications or upon the drawings the words "directed", "required", "ordered", "designated", "prescribed", or words of like import are used, it shall be understood that the "direction", "requirement", "order", "designation", or "prescription", of the Contracting Officer is intended and similarly the words "approved", "acceptable", "satisfactory", or words of like import shall mean "approved by," or "acceptable to", or "satisfactory to" the Contracting Officer, unless otherwise expressly stated.

(c) Where "as shown," as indicated", "as detailed", or words of similar import are used, it shall be understood that the reference is made to the drawings accompanying this contract unless stated otherwise. The word "provided" as used herein shall be understood to mean "provide complete in place," that is "furnished and installed".

(d) Shop drawings means drawings, submitted to the Government by the Contractor, subcontractor, or any lower tier subcontractor pursuant to a construction contract, showing in detail (1) the proposed fabrication and assembly of structural elements, and (2) the installation (i.e., fit, and attachment details) of materials or equipment. It includes drawings, diagrams, layouts, schematics, descriptive literature, illustrations, schedules, performance and test data, and similar materials furnished by the contractor to explain in detail specific portions of the work required by the contract. The Government may duplicate, use, and disclose in any manner and for any purpose shop drawings delivered under this contract.

(e) If this contract requires shop drawings, the Contractor shall coordinate all such drawings, and review them for accuracy, completeness, and compliance with contract requirements and shall indicate its approval thereon as evidence of such coordination and review. Shop drawings submitted to the Contracting Officer without evidence of the Contractor's approval may be returned for resubmission. The Contracting Officer will indicate an approval or disapproval of the shop drawings and if not approved as submitted shall indicate the Government's reasons therefore. Any work done before such approval shall be at the Contractor's risk. Approval by the Contracting Officer shall not relieve the Contractor from responsibility for any errors or omissions in such drawings, nor from responsibility for complying with the requirements of this contract, except with respect to variations described and approved in accordance with (f) below.

(f) If shop drawings show variations from the contract requirements, the Contractor shall describe such variations in writing, separate from the drawings, at the time of submission. If the Contracting Officer approves any such variation, the Contracting Officer shall issue an appropriate contract modification, except that, if the variation is minor or does not involve a change in price or in time of performance, a modification need not be issued.

(g) The Contractor shall submit to the Contracting Officer for approval four copies (unless otherwise indicated) of all shop drawings as called for under the various headings of these specifications. Three sets (unless otherwise

indicated) of all shop drawings, will be retained by the Contracting Officer and one set will be returned to the Contractor.

(End of clause)

52.236-5000 PLANT AND MATERIAL REMOVAL AFTER CONTRACT TERMINATION (MAR 1995)--EFARS

Should this contract be terminated as provided in clause 52.232-5001 because of the failure of Congress to provide additional funds for its completion, the contractor may be permitted to remove plant and material on which payments for preparatory work have been made, subject to an equitable deduction from the amounts due the contractor to reimburse the United States for the unabsorbed value of such plant and material.

(End of clause)

52.249-5000 BASIS FOR SETTLEMENT OF PROPOSALS

Actual costs will be used to determine equipment costs for a settlement proposal submitted on the total cost basis under FAR 49.206-2(b). In evaluating a terminations settlement proposal using the total cost basis, the following principles will be applied to determine allowable equipment costs:

1. Actual costs for each piece of equipment, or groups of similar serial or series equipment, need not be available in the contractor's accounting records to determine total actual equipment costs.
2. If equipment costs have been allocated to a contract using predetermined rates , those charges will be adjusted to actual costs.
3. Recorded job costs adjusted for unallowable expenses will be used to determine equipment operating expenses.
4. Ownership costs (depreciation) will be determined using the contractor's depreciation schedule (subject to the provisions of FAR 31.205-11).
5. License, taxes, storage and insurance costs are normally recovered as an indirect expense and unless the contractor charges these costs directly to contracts, they will be recovered through the indirect expense rate.

(End of Clause)

252.236-7001 CONTRACT DRAWINGS, MAPS, AND SPECIFICATIONS (AUG 2000)

(a) The Government will provide to the Contractor, without charge, one set of contract drawings and specifications, except publications incorporated into the technical provisions by reference, in electronic or paper media as chosen by the Contracting Officer.

(b) The Contractor shall--

(1) Check all drawings furnished immediately upon receipt;

(2) Compare all drawings and verify the figures before laying out the work;

(3) Promptly notify the Contracting Officer of any discrepancies;

(4) Be responsible for any errors that might have been avoided by complying with this paragraph (b); and

(5) Reproduce and print contract drawings and specifications as needed.

(c) In general--

(1) Large-scale drawings shall govern small-scale drawings; and

(2) The Contractor shall follow figures marked on drawings in preference to scale measurements.

(d) Omissions from the drawings or specifications or the misdescription of details of work that are manifestly necessary to carry out the intent of the drawings and specifications, or that are customarily performed, shall not relieve the Contractor from performing such omitted or misdescribed details of the work. The Contractor shall perform such details as if fully and correctly set forth and described in the drawings and specifications.

(e) The work shall conform to the specifications and the contract drawings identified on the following index of drawings:

Drawing Index File No. 471-0451 Drawing No. G-2

(End of clause)

-- End of Section --

SECTION 00850

WAGE RATES

General Decision Number **AZ020014**
Superseded General Decision No. AZ010014
State: Arizona
Construction Type:
HEAVY
County(ies):
MARICOPA PINAL
HEAVY CONSTRUCTION PROJECTS (excluding dam construction)

Modification Number	Publication Date
0	03/01/2002
1	05/10/2002
2	12/13/2002
3	04/18/2003

COUNTY(ies):
MARICOPA PINAL

* ASBE0073B 03/01/2003

	Rates	Fringes
ASBESTOS WORKERS/INSULATORS Includes the application of all insulating materials, protective coverings, coatings, and finishes to all types of mechanical systems	22.63	5.07

ASBE0073D 02/16/2001

	Rates	Fringes
ASBESTOS REMOVAL WORKER/ HAZARDOUS MATERIAL HANDLER Includes preparation, wetting, stripping, removal, scrapping, vacuuming, bagging aand disposing of all insulation materials from mechanical systems, whether they contain asbestos or not	20.18	5.87

BOIL0627B 02/01/2001

	Rates	Fringes
BOILERMAKERS (Including Containment Lining)	22.33	10.89

* CARP0408E 10/01/2002

	Rates	Fringes
CARPENTERS (Including Form Work, Metal Stud Framing, and Metal Welding)	20.00	3.76

CARP1914A 09/01/2000

	Rates	Fringes
MILLWRIGHTS:		
Zone 1	19.20	5.97
Zone 2	20.58	5.97
Zone 3	21.20	5.97
Zone 4	23.70	5.97

ZONE DEFINITIONS FOR MILLWRIGHTS:

Mileage shall be calculated from the construction site to the City Hall in Phoenix or Tucson, or to the workmen's residence, whichever is less:
Zone 1: 0-30 miles
Zone 2: 30-45 miles
Zone 3: 45-60 miles
Zone 4: over 60 miles

ENGI0428D 06/01/2002

	Rates	Fringes
POWER EQUIPMENT OPERATORS:		
Group 1	16.64	5.08
Group 2	19.91	5.08
Group 3	20.99	5.08
Group 4	22.02	5.08

POWER EQUIPMENT OPERATORS CLASSIFICATIONS
GROUP 1: Loader, 3.5 cu yd and under
GROUP 2: Bulldozer; Crane, under 15 tons; Loader, over 3.5 cu yd but less than 6 cu yd; Oiler Truck; and roller
GROUP 3: Crane, over 15 tons but less than 100 tons; Loader, over 6 cu yd but less than 10 cu yd; and Mechanic
GROUP 4: Crane, 100 tons and over; Loader, 10 cu yd and over
All Operators, Oilers, and Motor Crane Drivers on equipment with Booms, except concrete pumping truck booms, including Jibs, shall receive $0.01 per hour per foot over 80 ft in addition to regular rate of pay

---

IRON0075D 08/01/2002

	Rates	Fringes
IRONWORKERS; REBAR & STRUCTURAL		
0-50 miles from City Hall in Phoenix or Tucson	20.91	10.35
50-100 miles	22.41	10.35
100-150 miles	23.66	10.35
over 150 miles	24.91	10.35

PLUM0469E 07/01/2002

	Rates	Fringes
MARICOPA COUNTY		
PLUMBERS AND PIPEFITTERS		
ZONE 1:		
Commercial	24.35	8.75
Industrial (Power Plants, Pumping Stations, Pipelines)	27.35	8.75

ZONE DEFINITIONS FOR PLUMBERS AND PIPEFITTERS:
ZONE 1: Area within a 40 mile radius of the center of Phoenix.
ZONE 2: Area outside a 40 mile radius of the center of Phoenix.
Add $3.00 to Zone 1 basic hourly rate.

PLUM0741E 07/02/2002

	Rates	Fringes
PINAL COUNTY		
PLUMBERS AND PIPEFITTERS	21.51	8.29

SUAZ2001A 02/01/1994

	Rates	Fringes

CEMENT MASONS	14.30	3.05
ELECTRICIANS	11.91	1.43
LABORERS:		
General	9.29	2.25
Landscape	5.15	
Mechanical Tools	10.58	1.76
Pipelayer	9.78	
Concrete Worker	11.66	
POWER EQUIPMENT OPERATORS:		
Backhoe	14.47	3.28
Blade/Grader/Scraper	14.64	3.28
Skip Loader	11.96	2.78
Trencher	15.10	3.28
Water Well Driller	12.80	2.68
SPRINKLER FITTER, IRRIGATION	6.65	

---

* TEAM0104C 06/01/2002

	Rates	Fringes
TRUCK DRIVERS:		
Dump Truck, 2 or 3 axle; Water Truck under 2500 gallons	14.49	4.67
Dump Truck, 4-axle	15.33	4.67
Dump Truck, 5-axle; Water Truck, 2500 gal to 3900 gal	15.88	4.67
Water Truck over 3900 gal.	16.09	4.67

WELDERS - Receive rate prescribed for craft performing operation to which welding is incidental.

==========

Unlisted classifications needed for work not included within the scope of the classifications listed may be added after award only as provided in the labor standards contract clauses (29 CFR 5.5(a)(1)(ii)).

In the listing above, the "SU" designation means that rates listed under that identifier do not reflect collectively bargained wage and fringe benefit rates. Other designations indicate unions whose rates have been determined to be prevailing.

WAGE DETERMINATION APPEALS PROCESS

1.) Has there been an initial decision in the matter? This can be:

* an existing published wage determination
* a survey underlying a wage determination
* a Wage and Hour Division letter setting forth a position on a wage determination matter
* a conformance (additional classification and rate) ruling

On survey related matters, initial contact, including requests for summaries of surveys, should be with the Wage and Hour Regional Office for the area in which the survey was conducted because those Regional Offices have responsibility for the Davis-Bacon survey program. If the response from this initial contact is not satisfactory, then the process described in 2.) and 3.) should be followed.

With regard to any other matter not yet ripe for the formal process described here, initial contact should be with the Branch

of Construction Wage Determinations. Write to:

Branch of Construction Wage Determinations
Wage and Hour Division
U. S. Department of Labor
200 Constitution Avenue, N. W.
Washington, D. C. 20210

2.) If the answer to the question in 1.) is yes, then an interested party (those affected by the action) can request review and reconsideration from the Wage and Hour Administrator (See 29 CFR Part 1.8 and 29 CFR Part 7). Write to:

Wage and Hour Administrator
U.S. Department of Labor
200 Constitution Avenue, N. W.
Washington, D. C. 20210

The request should be accompanied by a full statement of the interested party's position and by any information (wage payment data, project description, area practice material, etc.) that the requestor considers relevant to the issue.

3.) If the decision of the Administrator is not favorable, an interested party may appeal directly to the Administrative Review Board (formerly the Wage Appeals Board). Write to:

Administrative Review Board
U. S. Department of Labor
200 Constitution Avenue, N. W.
Washington, D. C. 20210

4.) All decisions by the Administrative Review Board are final.

END OF GENERAL DECISION

SECTION TABLE OF CONTENTS

DIVISION 01 - GENERAL REQUIREMENTS

SECTION 01200

GENERAL REQUIREMENTS

PART 1 GENERAL

1.1 REFERENCES
1.2 SUBMITTALS
1.3 QUALIFICATIONS
1.4 TEMPORARY ELECTRIC WIRING
1.4.1 Temporary Power and Lighting
1.4.2 Construction Equipment
1.4.3 Circuit Protection
1.5 UTILITIES
1.5.1 Cooperation with Utilities
1.5.2 APS and Electrical Utilities (SRP)
1.5.3 Salt River Project Water Operations
1.5.4 Existing Wells and Probes
1.6 GENERAL SAFETY REQUIREMENTS
1.6.1 General
1.6.2 The Prime Contractor's superintendent
1.6.3 Additional Health and Safety Requirements
1.6.4 Violations
1.6.5 Elevated Work Areas
1.6.6 Fire Prevention
1.6.7 Record keeping/Reporting Requirements
1.6.8 Accident Reporting
1.7 TIME EXTENSIONS FOR UNUSUALLY SEVERE WEATHER
1.8 SUPERVISION BY THE CONTRACTOR
1.9 WASTE MATERIAL
1.10 SEWAGE DISPOSAL FOR TEMPORARY FACILITIES
1.11 INTERRUPTION OF EXISTING UTILITIES SERVICES
1.12 UTILITY OUTAGES
1.12.1 Utility Outages
1.13 PUBLIC UTILITY COMPANIES
1.14 UTILITY OUTAGES AND ROAD CUTTING
1.15 COOPERATION BETWEEN CONTRACTORS
1.16 CONTRACTORS WORK AREA
1.16.1 Site Plan
1.16.2 Employee Parking
1.17 AVAILABILITY AND USE OF UTILITY SERVICES
1.17.1 Payment for Utility Services
1.17.2 Meters and Temporary Connections
1.17.3 Construction Water
1.17.4 Sanitation
1.18 BULLETIN BOARD, PROJECT SIGN, AND PROJECT SAFETY SIGN
1.18.1 Bulletin Board

1.18.2 Project and Safety Signs
1.18.2.1 Project Information Signs
1.18.2.2 Warning Signs
1.18.2.3 Hard Hat Signs
1.19 PROTECTION AND MAINTENANCE OF TRAFFIC
1.19.1 Haul Roads
1.19.2 Barricades
1.19.3 Contractor Access
1.20 CONTRACTOR'S TEMPORARY FACILITIES
1.20.1 Administrative Field Offices
1.20.2 Storage Area
1.20.3 Contractor's Work
1.20.4 Appearance of Trailers
1.20.5 Maintenance of Storage Area
1.20.6 Security Provisions
1.21 PAYMENT
1.22 WORK SITE COMMUNICATION
1.23 TEMPORARY PROJECT SAFETY FENCING
1.23.1 Safety Barricades
1.24 CLEANUP
1.25 RESTORATION OF STORAGE AREA

PART 2 PRODUCTS

2.1 CONSTRUCTION SIGNS
2.1.1 Materials
2.1.1.1 Lumber
2.1.1.2 Plywood
2.1.1.3 Bolts, Nuts and Nails
2.1.1.4 Paints and Oils

PART 3 EXECUTION

3.1 PROJECT SCHEDULE
3.1.1 General Requirements
3.1.2 Basis for Payment
3.1.2.1 Project Schedule
3.1.2.2 Use of the Critical Path Method
3.1.2.3 Level of Detail Required
3.1.3 Scheduled Project Completion
3.1.3.1 Project Start Date
3.1.3.2 Constraint of Last Activity
3.1.3.3 Early Project Completion
3.1.4 Interim Completion Dates
3.1.4.1 Start Phase
3.1.4.2 End Phase
3.1.4.3 Phase X
3.1.5 Default Progress Data Disallowed
3.1.6 Out-of-Sequence Progress
3.1.7 Negative Lags
3.2 PROJECT SCHEDULE SUBMISSIONS
3.2.1 Preliminary Project Schedule Submission
3.2.2 Initial Project Schedule Submission
3.2.3 Periodic Schedule Updates

3.2.4 Standard Activity Coding Dictionary
3.3 SUBMISSION REQUIREMENTS
3.3.1 Data Disks
3.3.1.1 File Medium
3.3.1.2 Disk Label
3.3.1.3 File Name
3.3.2 Narrative Report
3.3.3 Approved Changes Verification
3.3.4 Schedule Reports
3.3.4.1 Activity Report
3.3.4.2 Logic Report
3.3.4.3 Total Float Report
3.3.4.4 Earnings Report
3.3.5 Network Diagram
3.3.5.1 Continuous Flow
3.3.5.2 Project Milestone Dates
3.3.5.3 Critical Path
3.3.5.4 Banding
3.3.5.5 S-Curves
3.4 PROJECT MEETING
3.4.1 Periodic Schedule Meetings
3.4.2 Meeting Attendance
3.4.3 Update Submission Following Progress Meeting
3.4.4 Progress Meeting Contents
3.4.4.1 Start and Finish Dates
3.4.4.2 Time Completion
3.4.4.3 Cost Completion
3.4.4.4 Logic Changes
3.4.4.5 Other Changes
3.4.5 Pre-Construction Meeting
3.4.6 Construction Progress Meetings
3.5 REQUESTS FOR TIME EXTENSIONS
3.5.1 Justification of Delay
3.5.2 Submission Requirements
3.5.3 Additional Submission Requirements
3.6 DIRECTED CHANGES
3.7 OWNERSHIP OF FLOAT
3.8 PERMITS
3.8.1 Permits To be Acquired by Contractor
3.8.2 Permits To Be Acquired by the Government
3.9 AS-BUILT "RECORD" DRAWINGS
3.9.1 General
3.9.2 Options
3.9.3 Preliminary As-Built Drawings
3.9.4 Submittal to Contracting Officer for Review and Approval
3.10 WORKING HOURS
3.11 USE OF EXPLOSIVES
3.12 PROTECTION AND RESTORATION OF PROPERTY
3.13 CONTRACTOR'S RESPONSIBILITY FOR WORK
3.14 TRAFFIC CONTROL
3.14.1 General Traffic Regulations:
3.14.2 Special Traffic Regulations
3.15 CONSTRUCTION OF SIGNS
3.15.1 Project Safety and Hard Hat Signs

3.15.2 Warning Signs
3.16 PAINTING SIGNS
3.17 SCRAP MATERIAL
3.18 PUBLIC SAFETY
3.19 RESERVOIR AREA COMPLETION

-- End of Section Table of Contents --

SECTION 01200

GENERAL REQUIREMENTS

PART 1 GENERAL

1.1 REFERENCES

The publications listed below form a part of the specification to the extent referenced. The publications are referenced in the text by basic designation only.

ASME INTERNATIONAL (ASME)

ASME B18.2.1	(1996) Square and Hex Bolts and Screws, Inch Series
ASME B18.2.2	(1987; R 1999) Square and Hex Nuts

ASTM INTERNATIONAL (ASTM)

ASTM F 547	(2001) Nails for Use with Wood and Wood-Base Materials

MASTERS PAINTERS INSTITUE (MPI)

MPI 5	(May 2002) Exterior Alkyd Wood Primer

NATIONAL FIRE PROTECTION ASSOCIATION (NFPA)

NFPA 70	(2002) National Electrical Code

NATIONAL INSTITUTE OF STANDARDS AND TECHNOLOGY (NIST)

NIST PS 20	(1999) American Softwood Lumber Standards

U.S. ARMY CORPS OF ENGINEERS (USACE)

EM 385-1-1	(1996) U. S. Army Corps of Engineers Safety and Health Requirements Manual
ER 1-1-11	(1995) Progress, Schedules, and Network Analysis Systems

U.S. DEPARTMENT OF COMMERCE (DOC)

PS 1	(1995) Construction and Industrial Plywood

U.S. GENERAL SERVICES ADMINISTRATION (GSA)

CID A-A-2962	(Rev A) Enamel, Alkyd (Metric)

1.2 SUBMITTALS

SD-01 Preconstruction Submittals

Temporary Electrical Layout Plan; G, RE
Contractor's Work Area Plan; G, RE

SD-11 Closeout Submittals

Preliminary As-Built Drawings; G, RE
Final As-Built Drawings; G, RE

1.3 QUALIFICATIONS

The Contractor shall designate an authorized representative who shall be responsible for the preparation of all required project schedule reports.

1.4 TEMPORARY ELECTRIC WIRING

1.4.1 Temporary Power and Lighting

The Contractor shall provide construction power facilities in accordance with the safety requirements of NFPA 70 and EM 385-1-1. The Contractor, or his delegated subcontractor, shall enforce all the safety requirements of electrical extensions for the work of all subcontractors. All work shall be accomplished by skilled electrical tradesmen in a workmanlike manner, as approved by the Contracting Officer. Prior to construction the Contractor shall provide a Temporary Electrical Layout Plan.

1.4.2 Construction Equipment

In addition to the requirements of EM 385-1-1 all temporary wiring conductors installed for operation of construction tools and equipment shall be either Type TW or THW contained in metal raceways, or may be multiconductor cord. Temporary wiring shall be secured above the ground or floor in a workmanlike manner and shall not present an obstacle to persons or equipment. Open wiring may only be used outside of buildings, and then only in strict accordance with the provisions of NFPA 70.

1.4.3 Circuit Protection

In addition to the present requirements in EM 385-1-1 and NFPA 70, all 15 and 20-ampere receptacle outlets used for obtaining power during construction shall have ground fault circuit interrupters (GFCI) for personnel protection. Block and brick saws shall also be equipped with GFCI. The Contracting Officer may allow an exception to this requirement for circuits for concrete vibrators or circuits operating at other than 60 Hertz normal (in both cases an assured grounding program as described in NFPA 70, except utilizing the daily inspection frequency of the grounding means of such equipment, may be permitted). The assured grounding program will not be permitted as a substitute for usage of GFCI'S except as described above. All generator-powered 15- and 20-ampere, 60 Hertz receptacle outlets shall have GFCI'S, and shall be properly grounded. A

testing means shall be provided which will impose a measured fault of 5 milliamperes, plus or minus 1 milliamperes, and result in tripping the GFCI unit.

1.5 UTILITIES

1.5.1 Cooperation with Utilities

An attempt has been made to determine the location of all underground utilities, drainage pipes, and structures; however, it shall be the Contractor's responsibility to cooperate with the pertinent utility companies so that any obstructing utility installation(s) may be adjusted. The location of the underground and overhead utilities as shown on the Drawings is based on the best available information. The Contractor shall not assume that this represents an exact location of the line. No guarantee is made to the accuracy of the location shown on the Drawings. The Contractor shall determine for himself the exact location of all utilities. Should Contractor's operations result in damage to any utility the location of which has been brought to its attention, he shall assume full responsibility for such damage. There also exists the likelihood that other abandoned older and undocumented underground utility and irrigation lines exist within the project area. Contractor shall contact Arizona Blue Stake (telephone number 602-263-1100) a minimum of two (2) working days before beginning any underground work. In addition, Blue Stake notification(s) shall be maintained on a current basis.

The following phone numbers should put the Contractor in contact with the proper personnel:

Arizona Public Service Company (APS)	
C.J. Powers	(602) 371-6972
City of Phoenix (COP) Water Services Department	
Mr. Jerry Arakaki, Senior Engineer	(602) 261-8229
Salt River Project (SRP)	
Ms. Cindy Scott	(602) 236-0684
Salt River Project Irrigation	
Mr. Al Baizel	(602) 236-0840
Qwest	
Mr. John Nevilis	(602) 630-6891
Southwest Gas	
Ms. Heather Symons	(602) 484-5244

It shall be the responsibility of the Contractor to verify the location of all utilities prior to any construction activities in a particular area where such facilities may exist. All existing overhead and underground utilities shall be Protected-in-Place (P.I.P.) unless noted otherwise on the Drawings.

1.5.2 APS and Electrical Utilities (SRP)

Both APS and SRP maintain high voltage (230kV and 500kV) overhead electric transmission lines in the vicinity of the project. The lines are within the construction limits of the project and shall be protected in place. The Contractor shall use caution in the adjacent area.

At all times during construction, the Contractor shall comply with all laws, ordinances, rules, regulations, and safety requirements, including but not limited to the National Electric Safety Code, and the Occupational Safety and Health Standards for General Industry and specific requirements of both SRP and APS when working in the vicinity of these high voltage lines.

1.5.3 Salt River Project Water Operations

All construction activities will occur within the bottom of the Salt River. The river is defined as the area between the North top of bank to South top of bank, including the stormwater outfalls in the river. Flows can occur at any time in the river, and nuisance flows are ever present in the river bottom.

The Contractor shall contact Salt River Project (SRP) Water Operations, Joe Rauch at 602-236-5461 or Dallas Reigle 602-236-2271 for information regarding SRP releases into the Salt River.

The Contractor should also request that SRP include the Contractor on a call list for anticipated releases into the river. Both the Flood Control District and the City of Phoenix are on the call list and could be used as an information resource for flow releases into the river by SRP. However, it remains the Contractor's responsibility to determine when flows will occur in the river and what impacts those flows will have on his equipment and his work.

A stormwater management plan shall be prepared which addressees the management of stormwater in and under the Salt River around construction areas. Design of the stormwater plan is the sole responsibility of Contractor. Prior to beginning the project, and within 45 days after award of contract, Contractor shall submit a draft copy of a Certificate of Design for the Management Plan with the seal of Contractor's engineer. This plan shall address the proposed method for the management of stormwater during construction. The plan shall include descriptions of proposed groundwater and surface water control facilities including, but not limited to, equipment; methods; standby equipment and power supply; pollution control facilities, and discharge locations to be utilized. Drawings shall show locations, dimensions, and relationships of elements of each system. Design calculations shall be provided demonstrating adequacy of proposed dewatering systems and components. If the system is modified during installation or operation, revise or amend and resubmit Stormwater Management Plan. Following review by the Contracting Officer, the Contractor shall address and incorporate any comments. The draft and final stormwater management plan shall be designed, stamped, signed, and certified by an independent professional consulting engineer, registered in the State of Arizona, who is not an employee of the Contractor. Contractor's engineer shall certify on a monthly basis that the facilities

required for the management of stormwater are constructed, operated and maintained substantially in accordance with the design.

1.5.4 Existing Wells and Probes

Several groundwater monitor wells and methane gas probes exist within the project area, some of which are shown in the Drawings. The Contractor shall determine for himself the exact location of each of these wells and probes, and any other wells that may have been installed in the project area. The Contractor shall take the necessary precautions to protect in place these wells and probes. Any damage caused by the Contractor to these wells and/or probes shall be repaired by the Contractor to the satisfaction of the owner at no cost to the project.

1.6 GENERAL SAFETY REQUIREMENTS

1.6.1 General

EM 385-1-1, (see Contract Clauses, Section 00700, ACCIDENT PREVENTION) and the Occupational Safety and Health Act (OSHA) Standards for Construction (Title 29, Code of Federal Regulations Part 1926 as revised from time to time); General Industry Standards (Title 29, Code of Federal Regulations Part 1910 as revised from time to time); and the National Fire Protection Association Codes are applicable to this contract. In case of conflict the most stringent requirement of the standards is applicable.

1.6.2 The Prime Contractor's superintendent

The Prime Contractor's superintendent shall take an active role in enforcing the safety requirements by participation in safety conferences, hazard analysis, tool box meetings, walk-through inspections, correction of violations, etc., and including that of the subcontractor's work.

1.6.3 Additional Health and Safety Requirements

Additional project specific health and safety requirements are presented in Section 01355, ENVIRONMENTAL PROTECTION.

1.6.4 Violations

If recurring violations and/or gross violation indicate that the safety performance is unsatisfactory, corrective action shall be taken as directed, and at the discretion of the Contracting Officer the retention or some part thereof will be withheld from the progress payment until corrective action has been completed.

1.6.5 Elevated Work Areas

Workers in elevated work areas in excess of 6 feet above an adjoining surface require special safety attention. In addition to the provisions of EM 385-1-1, the following safety measures are required to be submitted to the Contracting Officer. Prior to commencement of work in elevated work areas, the Contractor shall submit Drawings depicting all provisions of his positive protection system including, but not limited to, all details of

guard rails.

Positive protection for workmen engaged in the installation of structural steel and steel joists shall be provided by safety nets, tie-off's, hydraulic man lifts, scaffolds, or other required means. Decking crews must be tied-off or work over nets or platforms not over 6 feet below the work area. Walking on beams and/or girders and the climbing of columns is prohibited without positive protection.

1.6.6 Fire Prevention

The Contractor shall coordinate with the Fire Department and the Contracting Officer prior to conducting any fire hazardous operation. Cutting or welding will be permitted only in areas that are or have been made fire safe. Where possible, all combustibles shall be located at least 35 feet horizontally from the work site. Where such location is impracticable, combustibles shall be protected with fire blankets and/or protective welding screens to prevent slag from running out of the work area.

1.6.7 Record keeping/Reporting Requirements

On all contract operations, the Prime Contractor shall be responsible for recording and reporting all accident exposure and experience incident work. (This includes exposure and experience of the prime Contractor and his/her sub-contractor(s)). As a minimum these records shall include exposure work-hours and a log of occupational injuries and . (OSHA Form 200 or state equivalent as prescribed by 29 CFR 1904.5) Reference EM 385-1-1, 01.D.04.

1.6.8 Accident Reporting

In addition to the requirements for reporting accidents in accordance with EM 385-1-1, Section 1, the Contractor will submit at the 50% point and 100% of project completion, a written summary of worker's compensation claims filed by workers on the project. The report will include all subcontractors. The main report covering the Prime Contractor claims will be certified as "correct and true" by the Contractor's compensation insurance carrier. The same certification will be required for subcontractor reports.

1.7 TIME EXTENSIONS FOR UNUSUALLY SEVERE WEATHER

This provision specifies the procedure for the determination of time extensions for unusually severe weather in accordance with the CONTRACT CLAUSE, entitled "DEFAULT (FIXED-PRICE CONSTRUCTION)". In order for the Contracting Officer to award a time extension under this clause, the following conditions must be satisfied:

a. The weather experienced at the project site during the contract period must be found to be unusually severe, that is, more severe than the adverse weather anticipated for the project location during any given month.

b. The unusually severe weather must actually cause a delay to the completion of the project. The delay must be beyond the control and without the fault or negligence of the Contractor.

The following schedule of monthly anticipated adverse weather delays is based on National Oceanic and Atmospheric Administration (NOAA) or similar data for the project location and will constitute the base line for monthly weather time evaluations. The Contractor's progress schedule must reflect these anticipated adverse weather delays in all weather dependent activities.

MONTHLY ANTICIPATED ADVERSE WEATHER DELAY
WORK DAYS BASED ON (5) AND (6) DAY WORK WEEK

	JAN	FEB	MAR	APR	MAY	JUN	JUL	AUG	SEP	OCT	NOV	DEC
5 Day	(08)	(04)	(01)	(01)	(05)	(06)	(07)	(07)	(06)	(04)	(02)	(06)
6 Day	(09)	(05)	(01)	(01)	(06)	(08)	(09)	(09)	(07)	(09)	(03)	(08)

Upon acknowledgement of the Notice to Proceed (NTP) and continuing throughout the contract, the Contractor will record on the daily CQC report, the occurrence of adverse weather and resultant impact to normally scheduled work. Actual adverse weather delay days must prevent work on critical activities for 50 percent or more of the Contractor's scheduled work day. (ER 415-1-15, 31 OCT 89)

1.8 SUPERVISION BY THE CONTRACTOR

The following requirements, in addition to those contained in the Contract Clause entitled: SUPERINTENDENCE BY CONTRACTOR, shall be met by the Contractor. The site representative appointed by the Contractor and approved by the Contracting Officer shall, as a minimum, have the authority to negotiate and execute Supplemental Agreements having a value up to $100,000.

1.9 WASTE MATERIAL

Unless otherwise specified, waste material shall be disposed of by the Contractor at a licensed off site sanitary landfill or sewage disposal plant. Permission to use the off-site sanitary landfill or sewage disposal plant shall be obtained by the Contractor and any costs attendant thereto shall be borne by the Contractor.

1.10 SEWAGE DISPOSAL FOR TEMPORARY FACILITIES

A sewage disposal location is not available at the site for use under this contract.

1.11 INTERRUPTION OF EXISTING UTILITIES SERVICES

The Contractor shall perform the work under this contract with a minimum of outage time for all utilities. Interruption shall be by approved Sections of the utility. In some cases, the Contractor may be required to perform the work while the existing utility is in service. The existing utilities services may be interrupted only when approved by the Contracting Officer. When it is necessary to interrupt the existing utilities, the Contractor

shall notify the Contracting Officer in writing at least 14 calendar days in advance of the time the Contractor desires the existing service to be interrupted. The interruption time shall be kept to a minimum. Depending upon the activities at the facility which require continuous service from the existing utility, an interruption may not be subject to schedule at the time desired by the Contractor. In such cases the interruption may have to be scheduled at a time of minimum requirement of demand for the utility. The amount of time requested by the Contractor for interruption of existing utility service shall be as approved by the Contracting Officer.

1.12 UTILITY OUTAGES

1.12.1 Utility Outages

The Contractor shall schedule work requiring disruption of utility distribution systems, electrical power, gas, sewage, water, and telephone. Contractor shall schedule this work such that work starts and is completed with continuous effort. For the convenience of the Government, the Contractor shall conduct outages on weekends or during non-duty hours. With the permission of the Contracting Officer, the Contractor shall work overtime for outages and shall not disrupt Government operations.

1.13 PUBLIC UTILITY COMPANIES

Arizona Blue Stake Laws govern digging clearance requirements for all public utilities such as US West, Southwest Gas, Salt River Project or Arizona Public Service. If there are public utilities in the area, the words "Blue Staking Required" will be written on the form.

1.14 UTILITY OUTAGES AND ROAD CUTTING

The Contractor shall provide a written request for utility outages or road cutting to the Contracting Officer ten working days in advance for approval. All outages and road cutting shall be programmed to occur at the convenience of the Government.

1.15 COOPERATION BETWEEN CONTRACTORS

The Government may have construction activities underway, including the site preparation within and adjacent to the project site and the Phase 1a contract between 7th Ave. and 7th Street of the river. The COP may also have under construction at the time of this project their Habitat Demonstration Project located along the north side of the low flow channel and east of Central Avenue. The Contractor shall be aware of these possible City Of Phoenix construction activities and shall work cooperatively with the COP Contractors to minimize impacts to all projects. The Contractor shall KEEP OUT of the Habitat Demonstration Project area.

1.16 CONTRACTORS WORK AREA

1.16.1 Site Plan

The Contractor shall prepare a Contractor's Work Area Plan indicating the proposed location and dimensions of any area to be fenced and used by the

Contractor, the number of trailers to be used, avenues of ingress/egress to the fenced area and details of the fence installation. Any areas which may have to be graveled to prevent the tracking of mud shall also be identified. The Contractor shall also indicate if the use of a supplemental or other staging area is desired.

1.16.2 Employee Parking

Contractor employees shall park privately owned vehicles in an area designated by the Contracting Officer. This area will be within reasonable walking distance of the construction site.

1.17 AVAILABILITY AND USE OF UTILITY SERVICES

1.17.1 Payment for Utility Services

The Government will make all reasonably required utilities available to the Contractor from existing outlets and supplies, as specified in the contract. Unless otherwise provided in the contract, the amount of each utility service consumed shall be charged to or paid for by the Contractor.

1.17.2 Meters and Temporary Connections

The Contractor, at its expense and in a manner satisfactory to the Contracting Officer, shall provide and maintain necessary temporary connections, distribution lines, and meter bases required to measure the amount of each utility used for the purpose of determining charges. The Contractor shall notify the Contracting Officer, in writing, 5 working days before final electrical connection is made.

1.17.3 Construction Water

Construction water is available from City of Phoenix hydrants as follows:

a. There are eleven hydrants located within one-quarter to one-half mile of the river between 7th Street and 24th Street that could be used for such purposes.

b. The Contractor will obtain a permit from the City at the second floor of the City Hall Building. The Contractor should allow two weeks for the City installation of the meter.

c. A fee of $500 will be charged for each hydrant and meter, some of this fee being refundable.

d. The charge for the water is approximately $1.37/100 cubic feet.

e. The Contractor will contact the City for specific information regarding the use of City water and for all costs associated with its use.

The Contractor cannot use groundwater from dewatering activities or from within excavations for construction purposes including dust control.

1.17.4 Sanitation

The Contractor shall provide and maintain within the construction area minimum field-type sanitary facilities approved by the Contracting Officer. Government toilet facilities will not be available to Contractor's personnel.

1.18 BULLETIN BOARD, PROJECT SIGN, AND PROJECT SAFETY SIGN

1.18.1 Bulletin Board

Immediately upon beginning of work, the Contractor shall provide a weatherproof glass-covered bulletin board not less than 36 by 48 inches in size for displaying the Equal Employment Opportunity poster, a copy of the wage decision contained in the contract, Wage Rate Information poster, and other information approved by the Contracting Officer. The bulletin board shall be located at the project site in a conspicuous place easily accessible to all employees, as approved by the Contracting Officer. Legible copies of the aforementioned data shall be displayed until work is completed. Upon completion of work the bulletin board shall be removed by and remain the property of the Contractor.

1.18.2 Project and Safety Signs

1.18.2.1 Project Information Signs

Contractor shall provide and install six (6) project information signs, at locations to be determined by the Contracting Officer, at the start of construction to inform the public of the forthcoming project and construction dates. Signs shall be constructed in accordance with the Project Sign Information Figures 1 and 2 included at the end of this section to be provided to the Contractor at the pre-construction meeting. The signs shall be installed at the location(s) approved by the Contracting Officer. The Contractor shall maintain the signs as necessary, and update the information as requested by the Contracting Officer.

1.18.2.2 Warning Signs

Contractor shall provide and install warning signs facing approaching traffic on all roads crossing under overhead power lines. Contractor shall also supply warning signs at sand and gravel operations cross traffic at locations shown on the Drawings or directed by the Contracting Officer.

1.18.2.3 Hard Hat Signs

Contractor shall provide and install six hard hat signs as shown in the Hard Hat Sign figure at the end of this section, at locations directed by the Contracting Officer.

1.19 PROTECTION AND MAINTENANCE OF TRAFFIC

During construction the Contractor shall provide access and temporary relocated roads as necessary to maintain traffic. The Contractor shall maintain and protect traffic on all affected roads during the construction

period except as otherwise specifically directed by the Contracting Officer. Measures for the protection and diversion of traffic, including the provision of watchmen and flagmen, erection of barricades, placing of lights around and in front of equipment and the work, and the erection and maintenance of adequate warning, danger, and direction signs, shall be as required by the State and local authorities having jurisdiction. The traveling public shall be protected from damage to person and property. The Contractor's traffic on roads selected for hauling material to and from the site shall interfere as little as possible with public traffic. The Contractor shall investigate the adequacy of existing roads and the allowable load limit on these roads. The Contractor shall be responsible for the repair of any damage to roads caused by construction operations.

1.19.1 Haul Roads

Wherever possible the Contractor shall use existing haul roads. The Contractor shall, at its own expense, construct access and haul roads necessary for proper prosecution of the work under this contract. Haul roads shall be constructed with suitable grades and widths; sharp curves, blind corners, and dangerous cross traffic shall be avoided. The Contractor shall provide necessary lighting, signs, barricades, and distinctive markings for the safe movement of traffic. The method of dust control, although optional, shall be adequate to ensure safe operation at all times. Dust control shall be compliant with Section 01355, ENVIRONMENTAL PROTECTION. Location, grade, width, and alignment of construction and hauling roads shall be submitted on Site Haul Road Drawings and subject to approval by the Contracting Officer. Lighting shall be adequate to assure full and clear visibility for full width of haul road and work areas during any night work operations. Upon completion of the work, haul roads unless approved to remain by the Contracting Officer shall be removed.

1.19.2 Barricades

The Contractor shall erect and maintain temporary barricades to limit public access to hazardous areas. Such barricades shall be required whenever safe public access to paved areas such as roads, parking areas or sidewalks is prevented by construction activities or as otherwise necessary to ensure the safety of both pedestrian and vehicular traffic. Barricades shall be securely placed, clearly visible with adequate illumination to provide sufficient visual warning of the hazard during both day and night.

1.19.3 Contractor Access

Contractor access to the river bottom is available at the following locations using City of Phoenix rights-of-way:

a. On the south side of the river, east of Central Avenue there is an existing curb cut along the east side of Central Avenue south of the bridge. The curb cut gains access to an existing dirt road along the south side of the river, which leads to an existing ramp which grades to the bottom of the Salt River approximately 600 feet west of 7th Street. The Contractor may modify the ramp as necessary to provide safe access to the project site. There is

also an existing high clearance box culvert crossing under Central Avenue at this location that provides access from the east side to the west side of the bridge and the river bottom. In using this access off of Central Avenue the Contractor must protect-in-place the Gateway Facility located on the east side of the Central Avenue bridge. The Contractor will need to coordinate this access point with the Demonstration Site Contractor and Phase 1a Contractor.

b. On the north side of the river, about 2200 feet east of 7th street is a Temporary Construction Easement (TCE) from the dead-end of East University Drive off of 7th Street to the project area. The TCE gains access to an existing dirt road along the top of the north river bank. The road leads to an existing concrete paved ramp, which provides access to the river bottom about 1300 feet east of 16th Street. The Contractor may determine that this access will only be useable for pick-up trucks, or other similar light traffic loads. Any damage to the ramp, the existing dirt road along the riverbank, or within the TCE, will be repaired by the Contractor at no additional cost to the Government. The Contractor may need to remove an existing barricade located at the dead-end of East University drive in order to obtain equipment access to the TCE. Advance written permission from the City of Phoenix will be required for the removal of the barricade, and the Contractor shall replace the barricade in-kind to the satisfaction of the City of Phoenix. The cost of such barricade removal and reinstallation will be considered incidental to the project.

c. On the south side of the river, west of 7th Avenue is a gated ramp that can be used by the Contractor for access to the project site.

d. The Contractor may elect to obtain permission on his own for the use of other access locations to the project.

e. Contractor shall limit river bottom to those areas for ramp undercrossing construction.

The Contractor must obtain prior written approval of the property owner for such access use and submit a copy of the approval to the Contracting Officer prior to use of the property and/or ramps. Any damage to the property and/or ramps, caused by the Contractor's use, shall be repaired by the Contractor at no cost to the project.

1.20 CONTRACTOR'S TEMPORARY FACILITIES

1.20.1 Administrative Field Offices

The Contractor shall provide and maintain administrative field office facilities within the construction area at the designated site. Government office and warehouse facilities will not be available to the Contractor's personnel.

1.20.2 Storage Area

The Contractor shall construct a temporary 6 foot high chain link fence around trailers and materials. Fence posts may be driven, in lieu of concrete bases, where soil conditions permit. Trailers, materials, or equipment shall not be placed or stored outside the fenced area. Trailers, equipment, or materials shall not be open to public view with the exception of those items which are in support of ongoing work on any given day. Materials shall not be stockpiled outside the fence in preparation for the next day's work. Mobile equipment, such as tractors, wheeled lifting equipment, cranes, trucks, and like equipment, shall be parked within the fenced area at the end of each work day.

1.20.3 Contractor's Work

The Contractor may establish a Contractor's Work Area (CWA) upon Contracting Officer's approval. The Contractor understands that his use of the river bottom for a CWA is solely at his own risk. No compensation will be made to the Contractor for any damage to or loss of equipment caused by the Contractor's establishment of a CWA in the river bottom.

a. The CWA must cover the least amount of acreage possible to accomplish the tasks required for the material storage and servicing of equipment.

b. Contractor shall not damage native plants or trees to establish CWA. The CWA shall not be located in the Low Flow Channel.

c. The Contractor will monitor on a daily basis all activities in the CWA that may result in the leakage of oils, fluids, fuels, etc. which may contaminate soils in the river bottom, and promptly report any suspected leaks to the Contracting Officer.

d. The Contractor will remove or clean up to background concentrations, and in accordance with applicable regulations test and properly dispose of all such contaminated soils resulting from the Contractors activities within the CWA and the river bottom on at least a biweekly basis, or more frequently at the direction of the Contracting Officer. The Contractor shall provide all necessary documentation to the Contracting Officer, including at a minimum the location, quantity, test results, and documentation of disposal of any such contaminated soils within one month after removal. At the discretion of the Contracting Officer, the Contractor may be required to provide a cleanup plan for approval prior to addressing such contaminated soils.

e. The Contractor must create low diversion berms to direct surface flows away from the CWA so as to minimize the transport of contaminated soils downstream.

f. The Contractor must coordinate with the Site Preparation Contractor, and Phase 1a Contractor, such that there is no interference with either project.

The Contractor may temporarily stockpile materials in the river bottom upon Contracting Officer's approval. However the following criteria will be

applied to the stockpiles:

a. The stockpiles can be no more than 100 feet wide at the base.

b. The long axis of the stockpiles must be oriented parallel to the direction of flow in the river.

c. Any remnant materials remaining from the stockpiles after completion of the project must be completely removed from the river bottom.

The Contractor shall obtain approval of the Contracting Officer when using property outside the project limits of the river to park and service equipment and store materials for use. The Contractor will obtain prior written approval of the property owner for such use and submit a copy of the approval to the Contracting Officer prior to use of the property.

The Contractor must provide the Government field office construction trailer area outside of the river bottom at locations shown on the drawings.

The Contractor shall grade all construction yards, easements and limits of construction which are disturbed by construction or construction related activities to the lines and grades shown on the Drawings; or as a minimum, where no line or grade is shown, to a condition similar to or better than the pre-existing condition.

1.20.4 Appearance of Trailers

Trailers utilized by the Contractor for administrative or material storage purposes shall present a clean and neat exterior appearance and shall be in a state of good repair. Trailers which, in the opinion of the Contracting Officer, require exterior painting or maintenance will not be allowed on the property.

1.20.5 Maintenance of Storage Area

Fencing shall be kept in a state of good repair and proper alignment. Should the Contractor elect to traverse, with construction equipment or other vehicles, unpaved areas which are not established roadways, such areas shall be covered with a layer of gravel as necessary to prevent rutting and the tracking of mud onto paved or established roadways; gravel gradation shall be at the Contractor's discretion.

1.20.6 Security Provisions

Adequate outside security lighting shall be provided at the Contractor's temporary facilities. The Contractor shall be responsible for the security of its own equipment; in addition, the Contractor shall notify the appropriate law enforcement agency requesting periodic security checks of the temporary project field office.

1.21 PAYMENT

No separate payment will be made for the items covered under this section

and all costs in connection with such work will be considered as a subsidiary obligation of the Contractor.

1.22 WORK SITE COMMUNICATION

Whenever the Contractor has the individual elements of its work site so located that operation by normal voice between these elements is not satisfactory, the Contractor shall install a satisfactory means of communication, such as telephone or other suitable devices. The devices shall be made available for use by Government personnel.

1.23 TEMPORARY PROJECT SAFETY FENCING

As soon as practicable, the Contractor shall furnish and erect temporary project safety fencing at the work site. The fencing shall be for the safety and protection of the Contractor work areas. The safety fencing shall be a high visibility orange colored, high density polyethylene grid or approved equal, a minimum of 42 inches high, supported and tightly secured to steel posts located on maximum 10 foot centers, constructed at the approved location. The safety fencing shall be maintained by the Contractor during the life of the contract and, upon completion and acceptance of the work, shall become the property of the Contractor and shall be removed from the work site.

1.23.1 Safety Barricades

As soon as practicable, the Contractor shall furnish and erect temporary safety barricades at the areas where the maintenance roads connect the City Streets (19th Avenue, 7th Avenue, Central Avenue, 7th Street, or 16th Street.) The safety barricades shall be placed to barricade the entire width of the maintenance road. The safety barricades shall be maintained by the Contractor during the life of the contract and, upon completion and acceptance of the work, shall become the property of the Contractor and shall be removed from the work site.

1.24 CLEANUP

Contractor generated construction debris, waste materials, packaging material and the like shall be removed from the work site daily. Any dirt or mud which is tracked onto paved or surfaced roadways shall be cleaned away. Stored material not in trailers, whether new or salvaged, shall be neatly stacked when stored.

1.25 RESTORATION OF STORAGE AREA

Upon completion of the project and after removal of trailers, materials, and equipment from within the fenced area, the fence shall be removed and will become the property of the Contractor. Areas used by the Contractor for the storage of equipment or material, or other use, shall be restored to the original or better condition as determined by the Contracting Officer.

PART 2 PRODUCTS

2.1 CONSTRUCTION SIGNS

2.1.1 Materials

2.1.1.1 Lumber

Lumber shall conform ton NIST PS 20, and shall be seasoned Douglas Fir, S4S, Grade D or better except that posts, braces and spacers shall be construction grade (WCLB).

2.1.1.2 Plywood

Plywood shall conform to PS 1, Grade A-C, Group 1, exterior type.

2.1.1.3 Bolts, Nuts and Nails

Bolts shall conform to ASME B18.2.1, nuts shall conform to ASME B18.2.2, and nails shall conform to ASTM F 547.

2.1.1.4 Paints and Oils

Paints shall conform to MPI 5 for primer and CID A-A-2962 for finish paint and lettering.

PART 3 EXECUTION

3.1 PROJECT SCHEDULE

3.1.1 General Requirements

Pursuant to the Contract Clause, SCHEDULE FOR CONSTRUCTION CONTRACTS, a Project Schedule as described below shall be prepared. The scheduling of construction shall be the responsibility of the Contractor. Contractor management personnel shall actively participate in its development. Subcontractors and suppliers working on the project shall also contribute in developing and maintaining an accurate Project Schedule. The approved Project Schedule shall be used to measure the progress of the work, to aid in evaluating time extensions, and to provide the basis of all progress payments.

The Contractor shall be required to input its schedule into the Government Resident Management System (RMS) as described in Section 01312, QUALITY CONTROL SYSTEM (QCS). The use of the Standard Date Exchange Format (SDEF) is mandatory for this project. The Contractor must select a scheduling software which supports the SDEF.

3.1.2 Basis for Payment

The schedule shall be the basis for measuring Contractor progress. Lack of an approved schedule or scheduling personnel will result in an inability of the Contracting Officer to evaluate Contractor's progress for the purposes of payment. Failure of the Contractor to provide all information, as specified below, shall result in the disapproval of the entire Project Schedule submission and the inability of the Contracting Officer to

evaluate Contractor progress for payment purposes. In the case where Project Schedule revisions have been directed by the Contracting Officer and those revisions have not been included in the Project Schedule, the Contracting Officer may hold retainage up to the maximum allowed by contract, each payment period, until revisions to the Project Schedule have been made.

3.1.2.1 Project Schedule

The computer software system utilized by the Contractor to produce the Project Schedule shall be capable of providing all requirements of this specification. Failure of the Contractor to meet the requirements of this specification shall result in the disapproval of the schedule. Manual methods used to produce any required information shall require approval by the Contracting Officer.

3.1.2.2 Use of the Critical Path Method

The Critical Path Method (CPM) of network calculation shall be used to generate the Project Schedule. The Contractor shall provide the Project Schedule in the Precedence Diagram Method (PDM).

3.1.2.3 Level of Detail Required

The Project Schedule shall include an appropriate level of detail. Failure to develop or update the Project Schedule or provide data to the Contracting Officer at the appropriate level of detail, as specified by the Contracting Officer, shall result in the disapproval of the schedule. The Contracting Officer will use, but is not limited to, the following conditions to determine the appropriate level of detail to be used in the Project Schedule:

a. Activity Durations: Contractor submissions shall follow the direction of the Contracting Officer regarding reasonable activity durations. Reasonable durations are those that allow the progress of activities to be accurately determined between payment periods (usually less than 2 percent of all non-procurement activities' Original Durations are greater than 20 days).

b. Procurement Activities: Tasks related to the procurement of long lead materials or equipment shall be included as separate activities in the project schedule. Long lead materials and equipment are those materials that have a procurement cycle of over 90 days. Examples of procurement process activities include, but are not limited to: submittals, approvals, procurement, fabrication, and delivery.

c. Government Activities: Government and other agency activities that could impact progress shall be shown. These activities include, but are not limited to: approvals, inspections, utility tie-in, Government Furnished Equipment (GFE) and Notice to Proceed (NTP) for phasing requirements.

d. Responsibility: All activities shall be identified in the

project schedule by the party responsible to perform the work. Responsibility includes, but is not limited to, the subcontracting firm, contractor work force, or Government agency performing a given task. Activities shall not belong to more than one responsible party. The responsible party for each activity shall be identified by the Responsibility Code.

e. Work Areas: All activities shall be identified in the project schedule by the work area in which the activity occurs. Activities shall not be allowed to cover more than one work area. The work area of each activity shall be identified by the Work Area Code.

f. Modification or Claim Number: Any activity that is added or changed by contract modification or used to justify claimed time shall be identified by a mod or claim code that changed the activity. Activities shall not belong to more than one modification or claim item. The modification or claim number of each activity shall be identified by the Mod or Claim Number. Whenever possible, changes shall be added to the schedule by adding new activities. Existing activities shall not normally be changed to reflect modifications.

g. Bid Item: All activities shall be identified in the project schedule by the Bid Item to which the activity belongs. An activity shall not contain work in more than one bid item. The bid item for each appropriate activity shall be identified by the Bid Item Code.

h. Phase of Work: All activities shall be identified in the project schedule by the phases of work in which the activity occurs. Activities shall not contain work in more than one phase of work. The project phase of each activity shall be by the unique Phase of Work Code.

i. Category of Work: All activities shall be identified in the project schedule according to the category of work which best describes the activity. Category of work refers, but is not limited, to the procurement chain of activities including such items as submittals, approvals, procurement, fabrication, delivery, installation, start-up, and testing. The category of work for each activity shall be identified by the Category of Work Code.

j. Feature of Work: All activities shall be identified in the project schedule according to the feature of work to which the activity belongs. Feature of work refers, but is not limited to, a work breakdown structure for the project. The feature of work for each activity shall be identified by the Feature of Work Code.

3.1.3 Scheduled Project Completion

The schedule interval shall extend from NTP to the contract completion date.

3.1.3.1 Project Start Date

The schedule shall start no earlier than the date on which the NTP was acknowledged. The Contractor shall include as the first activity in the project schedule an activity called "Start Project". The "Start Project" activity shall have an "ES" constraint date equal to the date that the NTP was acknowledged, and a zero day duration.

3.1.3.2 Constraint of Last Activity

Completion of the last activity in the schedule shall be constrained by the contract completion date. Calculation on project updates shall be such that if the early finish of the last activity falls after the contract completion date, then the float calculation shall reflect a negative float on the critical path. The Contractor shall include as the last activity in the project schedule an activity called "End Project". The "End Project" activity shall have an "LF" constraint date equal to the completion date for the project, and a zero day duration.

3.1.3.3 Early Project Completion

In the event the project schedule shows completion of the project prior to the contract completion date, the Contractor shall identify those activities that have been accelerated and/or those activities that are scheduled in parallel to support the Contractor's "early" completion. Contractor shall specifically address each of the activities noted in the narrative report at every project schedule update period to assist the Contracting Officer in evaluating the Contractor's ability to actually complete prior to the contract period.

3.1.4 Interim Completion Dates

Contractually specified interim completion dates shall also be constrained to show negative float if the early finish date of the last activity in that phase falls after the interim completion date.

3.1.4.1 Start Phase

The Contractor shall include as the first activity for a project phase an activity called "Start Phase X" where "X" refers to the phase of work. The "Start Phase X" activity shall have an "ES" constraint date equal to the date on which the NTP was acknowledged, and a zero day duration.

3.1.4.2 End Phase

The Contractor shall include as the last activity in a project phase an activity called "End Phase X" where "X" refers to the phase of work. The "End Phase X" activity shall have an "LF" constraint date equal to the completion date for the project, and a zero day duration.

3.1.4.3 Phase X

The Contractor shall include a hammock type activity for each project phase called "Phase X" where "X" refers to the phase of work. The "Phase X"

activity shall be logically tied to the earliest and latest activities in the phase.

3.1.5 Default Progress Data Disallowed

Actual Start and Finish dates shall not be automatically updated by default mechanisms that may be included in CPM scheduling software systems. Actual Start and Finish dates on the CPM schedule shall match those dates provided from Contractor Quality Control Reports. Failure of the Contractor to document the Actual Start and Finish dates on the Daily Quality Control report for every in-progress or completed activity, and failure to ensure that the data contained on the Daily Quality Control reports is the sole basis for schedule updating shall result in the disapproval of the Contractor's schedule and the inability of the Contracting Officer to evaluate Contractor progress for payment purposes. Updating of the percent complete and the remaining duration of any activity shall be independent functions. Program features which calculate one of these parameters from the other shall be disabled.

3.1.6 Out-of-Sequence Progress

Activities that have posted progress without all preceding logic being satisfied (Out-of-Sequence Progress) will be allowed only on a case-by-case approval of the Contracting Officer. The Contractor shall propose logic corrections to eliminate all out of sequence progress or justify not changing the sequencing for approval prior to submitting an updated project schedule.

3.1.7 Negative Lags

Lag durations contained in the project schedule shall not have a negative value.

3.2 PROJECT SCHEDULE SUBMISSIONS

The Contractor shall provide the submissions as described below. The data disk, reports, and network diagrams required for each submission are contained in paragraph SUBMISSION REQUIREMENTS.

3.2.1 Preliminary Project Schedule Submission

The Preliminary Project Schedule, defining the Contractor's planned operations for the first 60 calendar days shall be submitted for approval within 20 calendar days after the NTP is acknowledged. The approved preliminary schedule shall be used for payment purposes not to exceed 60 calendar days after NTP.

3.2.2 Initial Project Schedule Submission

The Initial Project Schedule shall be submitted for approval within 40 calendar days after NTP. The schedule shall provide a reasonable sequence of activities which represent work through the entire project and shall be at a reasonable level of detail.

3.2.3 Periodic Schedule Updates

Based on the result of progress meetings, specified in "Periodic Progress Meetings," the Contractor shall submit periodic schedule updates. These submissions shall enable the Contracting Officer to assess Contractor's progress. If the Contractor fails or refuses to furnish the information and project schedule data, which in the judgement of the Contracting Officer or authorized representative is necessary for verifying the Contractor's progress, the Contractor shall be deemed not to have provided an estimate upon which progress payment may be made.

3.2.4 Standard Activity Coding Dictionary

The Contractor shall use the activity coding structure defined in the Standard Data Exchange Format (SDEF) in ER 1-1-11, Appendix A. This exact structure is mandatory, even if some fields are not used.

3.3 SUBMISSION REQUIREMENTS

The following items shall be submitted by the Contractor for the preliminary submission, initial submission, and every periodic project schedule update throughout the life of the project:

3.3.1 Data Disks

Two data disks containing the project schedule shall be provided. Data on the disks shall adhere to the SDEF format specified in ER 1-1-11, Appendix A.

3.3.1.1 File Medium

Required data shall be submitted on 3.5 disks, formatted to hold 1.44 MB of data, under the MS-DOS Version 5. or 6.x, unless otherwise approved by the Contracting Officer.

3.3.1.2 Disk Label

A permanent exterior label shall be affixed to each disk submitted. The label shall indicate the type of schedule (Preliminary, Initial, Update, or Change), full contract number, project name, project location, data date, name and telephone number or person responsible for the schedule, and the MS-DOS version used to format the disk.

3.3.1.3 File Name

Each file submitted shall have a name related to either the schedule data date, project name, or contract number. The Contractor shall develop a naming convention that will ensure that the names of the files submitted are unique. The Contractor shall submit the file naming convention to the Contracting Officer for approval.

3.3.2 Narrative Report

A Narrative Report shall be provided with the preliminary, initial, and

each update of the project schedule. This report shall be provided as the basis of the Contractor's progress payment request. The Narrative Report shall include: a description of activities along the 2 most critical paths, a description of current and anticipated problem areas or delaying factors and their impact, and an explanation of corrective actions taken or required to be taken. The narrative report is expected to relay to the Government, the Contractor's thorough analysis of the schedule output and its plans to compensate for any problems, either current or potential, which are revealed through that analysis.

3.3.3 Approved Changes Verification

Only project schedule changes that have been previously approved by the Contracting Officer shall be included in the schedule submission. The Narrative Report shall specifically reference, on an activity by activity basis, all changes made since the previous period and relate each change to documented, approved schedule changes.

3.3.4 Schedule Reports

The format for each activity for the schedule reports listed below shall contain: Activity Numbers, Activity Description, Original Duration, Remaining Duration, Early Start Date, Early Finish Date, Late Start Date, Late Finish Date, Total Float. Actual Start and Actual Finish Dates shall be printed for those activities in progress or completed.

3.3.4.1 Activity Report

A list of all activities sorted according to activity number.

3.3.4.2 Logic Report

A list of Preceding and Succeeding activities for every activity in ascending order by activity number. Preceeding and succeeding activities shall include all information listed above in paragraph Schedule Reports. A blank line shall be left between each activity grouping.

3.3.4.3 Total Float Report

A list of all incomplete activities sorted in ascending order of total float. Activities which have the same amount of total float shall be listed in ascending order of Early Start Dates. Completed activities shall not be shown on this report.

3.3.4.4 Earnings Report

A compilation of the Contractor's Total Earnings on the project from the NTP until the most recent Monthly Progress Meeting. This report shall reflect the Earnings of specific activities based on the agreements made in the field and approved between the Contractor and Contracting Officer at the most recent Monthly Progress Meeting. Provided that the Contractor has provided a complete schedule update, this report shall serve as the basis of determining Contractor Payment. Activities shall be grouped by bid item and sorted by activity numbers. This report shall: sum all activities in

a bid item and provide a bid item percent; and complete and sum all bid items to provide a total project percent complete. The printed report shall contain, for each activity: the Activity Number, Activity Description, Original Budgeted Amount, Total Quantity, Quantity to Date, Percent Complete (based on cost), and Earnings to Date.

3.3.5 Network Diagram

The network diagram shall be required on the initial schedule submission and on monthly schedule update submissions. The network diagram shall depict and display the order and interdependence of activities and the sequence in which the work is to be accomplished. The Contracting Officer will use, but is not limited to, the following conditions to review compliance with this paragraph:

3.3.5.1 Continuous Flow

Diagrams shall show a continuous flow from left to right with no arrows from right to left. The activity number, description, duration, and estimated earned value shall be shown on the diagram.

3.3.5.2 Project Milestone Dates

Dates shall be shown on the diagram for start of project, any contract required interim completion dates, and contract completion dates.

3.3.5.3 Critical Path

The critical path shall be clearly shown.

3.3.5.4 Banding

Activities shall be grouped to assist in the understanding of the activity sequence. Typically, this flow will group activities by category of work, work area and/or responsibility.

3.3.5.5 S-Curves

Earnings curves showing projected early and late earnings and earnings to date.

3.4 PROJECT MEETING

3.4.1 Periodic Schedule Meetings

Progress meetings to discuss payment shall include a monthly onsite meeting or other regular intervals mutually agreed to at the preconstruction conference. During this meeting the Contractor shall describe, on an activity by activity basis, all proposed revisions and adjustments to the project schedule required to reflect the current status of the project. The Contracting Officer will approve activity progress, proposed revisions, and adjustments as appropriate.

3.4.2 Meeting Attendance

The Contractor's Project Manager and Scheduler shall attend the regular progress meeting.

3.4.3 Update Submission Following Progress Meeting

A complete update of the project schedule containing all approved progress, revisions, and adjustments, based on the regular progress meeting, shall be submitted not later than 4 working days after the monthly progress meeting.

3.4.4 Progress Meeting Contents

Update information, including Actual Start Dates, Actual Finish Dates, Remaining Durations, and Cost-to-Date shall be subject to the approval of the Contracting Officer. As a minimum, the Contractor shall address the following items on an activity by activity basis during each progress meeting.

3.4.4.1 Start and Finish Dates

The Actual Start and Actual Finish dates for each activity currently in-progress or completed.

3.4.4.2 Time Completion

The estimated Remaining Duration for each activity in-progress. Time-based progress calculations shall be based on Remaining Duration for each activity.

3.4.4.3 Cost Completion

The earnings for each activity started. Payment will be based on earnings for each in-progress or completed activity. Payment for individual activities will not be made for work that contains quality defects. A portion of the overall project amount may be retained based on delays of activities.

3.4.4.4 Logic Changes

All logic changes pertaining to NTP on change orders, change orders to be incorporated into the schedule, Contractor proposed changes in work sequence, corrections to schedule logic for out-of-sequence progress, lag durations, and other changes that have been made pursuant to contract provisions shall be specifically identified and discussed.

3.4.4.5 Other Changes

Other changes required due to delays in completion of any activity or group of activities include: 1) delays beyond the Contractor's control, such as strikes and unusual weather. 2) delays encountered due to submittals, Government Activities, deliveries or work stoppages which make re-planning the work necessary. 3) Changes required to correct a schedule which does not represent the actual or planned prosecution and progress of the work.

3.4.5 Pre-Construction Meeting

After award of the contract, a pre-construction meeting shall be scheduled at a location and time (prior to mobilization and start of construction) to be agreed upon between the Contracting Officer and the Contractor. The Contractor shall make all necessary arrangements to have key personnel of his company and of his principal subcontractors present at the meeting. Each representative shall have authority to make commitments and act for his firm. The purpose of the pre-construction meeting is to discuss any specific concerns or potential problems that the Contractor is aware of, to provide general information appropriate to the contract, to identify responsible individuals for various functions within each organization, and to develop tentative dates for the start of construction. The Contractor shall submit to the Contracting Officer during the pre-construction meeting the following documents:

1. Material data safety sheets
2. Preliminary work schedule
3. Preliminary traffic control plan
4. Emergency telephone numbers
5. Signing authority letter
6. Name and telephone number of the certified safety professional

The pre-construction meeting will cover topics such as critical elements of the work schedule, payment application and processing of invoices. Additionally, a scheduled start date for the work will be determined.

The Contractor shall be responsible to take minutes of the pre-construction meeting and distribute copies to all meeting participants. The meeting minutes shall be distributed within 48 hours of the meeting. At the subsequent construction progress meeting, the minutes will be attested or revised, as appropriate. The cost for attendance at the pre-construction meeting, and preparation and distribution of meeting minutes shall be incidental to the project and no extra payment will be made.

3.4.6 Construction Progress Meetings

Construction progress meetings shall be scheduled weekly, or as considered necessary by the Contracting Officer. The Contractor shall make all arrangements to have key personnel of his company and of his principal subcontractors present at all progress meetings; representatives shall have authority to make commitments and act for their firms. The Contractor shall assume full responsibility to act for and commit any subcontractor employed by the Contractor, whether or not such subcontractor is represented at the meeting.

During the construction progress meeting the Contracting Officer will act as chairman and will advise the Contractor of any administrative matters connected with the contract. The Contractor shall submit for review his three-week rolling schedule. The Contractor's representative at these meetings shall be prepared to discuss and resolve construction problems and concerns, material delivery and vendor data submittals status, construction progress as measured against the Contractor's accepted construction schedule and the Contractor's short range construction activities as

provided on his two-week rolling schedule. The Contractor shall not be relieved of his responsibility to fulfill all of the terms of the contract as a result of any inferences drawn or suggestions made available at these meetings.

The Contractor shall be responsible to take minutes of the construction progress meetings and distribute copies to all meeting participants. The meeting minutes shall be distributed within 48 hours of the meeting. At the subsequent construction progress meeting, the minutes will be attested or revised, as appropriate. The cost for attendance at meetings, and preparation and distribution of meeting minutes shall be incidental to the project and no extra payment will be made.

3.5 REQUESTS FOR TIME EXTENSIONS

In the event the Contractor requests an extension of the contract completion date, or any interim milestone date, the Contractor shall furnish the following for a determination as to whether or not the Contractor is entitled to an extension of time under the provisions of the contract: justification, project schedule data, and supporting evidence as the Contracting Officer may deem necessary. Submission of proof of delay, based on revised activity logic, duration, and costs (updated to the specific date that the delay occurred) is obligatory to any approvals.

3.5.1 Justification of Delay

The project schedule shall clearly display that the Contractor has used, in full, all the float time available for the work involved with this request. The Contracting Officer's determination as to the number of allowable days of contract extension shall be based upon the project schedule updates in effect for the time period in question, and other factual information. Actual delays that are found to be caused by the Contractor's own actions, which result in the extension of the schedule, will not be a cause for a time extension to the contract completion date.

3.5.2 Submission Requirements

The Contractor shall submit a justification for each request for a change in the contract completion date of under 2 weeks based upon the most recent schedule update at the time of the NTP or constructive direction issued for the change. Such a request shall be in accordance with the requirements of other appropriate Contract Clauses and shall include, as a minimum:

a. A list of affected activities, with their associated project schedule activity number.

b. A brief explanation of the causes of the change.

c. An analysis of the overall impact of the changes proposed.

d. A sub-network of the affected area.

Activities impacted in each justification for change shall be identified by a unique activity code contained in the required data file.

3.5.3 Additional Submission Requirements

For any requested time extension of over 2 weeks, the Contracting Officer may request an interim update with revised activities for a specific change request. The Contractor shall provide this disk within 4 days of the Contracting Officer's request.

3.6 DIRECTED CHANGES

If the NTP is issued for changes prior to settlement of price and/or time, the Contractor shall submit proposed schedule revisions to the Contracting Officer within 2 weeks of the NTP being issued. The proposed revisions to the schedule will be approved by the Contracting Officer prior to inclusion of those changes within the project schedule. If the Contractor fails to submit the proposed revisions, the Contracting Officer may furnish the Contractor with suggested revisions to the project schedule. The Contractor shall include these revisions in the project schedule until revisions are submitted, and final changes and impacts have been negotiated. If the Contractor has any objections to the revisions furnished by the Contracting Officer, the Contractor shall advise the Contracting Officer within 2 weeks of receipt of the revisions. Regardless of the objections, the Contractor shall continue to update the schedule with the Contracting Officer's revisions until a mutual agreement in the revisions is reached. If the Contractor fails to submit alternative revisions within 2 weeks of receipt of the Contracting Officer's proposed revisions, the Contractor will be deemed to have concurred with the Contracting Officer's proposed revisions. The proposed revisions will then be the basis for an equitable adjustment for performance of the work.

3.7 OWNERSHIP OF FLOAT

Float available in the schedule, at any time, shall not be considered for the exclusive use of either the Government or the Contractor.

3.8 PERMITS

Permits are required for the completion of this project. The Government will be obtaining several of the permits The Contractor shall be responsible for obtaining all of the remainder of the permits.

3.8.1 Permits To be Acquired by Contractor

Reference is made to the article of the contract entitled "Permits and Responsibilities" which obligates the Contractor to obtain all required licenses and permits. These permits include those issued by the City of Phoenix, Maricopa County, the State of Arizona, and Federal agencies. Contractor shall pay all charges fees, and taxes and provide all notices necessary and incidental to the due and lawful prosecution of the work. Permits, Drawings, and notices required of the Contractor may include but not be limited to the following:

a. City of Phoenix
    1. Hauling Permit (grading and drainage)

2. Land Use / Stockpile Permit
3. Construction Permit
4. Concrete and Paving Permit

b. Maricopa County
1. Waste Tire Disposal Permit
2. Refuse Hauling Permit
3. Earth Moving Permit and overall compliance with requirements of Rule 310 (additional requirements for soil stabilization, etc.)
4. Dust Control Plan

c. Arizona Department of Agriculture
1. Arizona Protected Native Plants and Wood Removal Permit for protected plants taken from project site
2. Notice of Intent to Clear Land

d. Structural Pest Control Commission
1. Certified Applicator. The following categories may apply: General Pesticide, Stagnant Water, Weed Control, Aquatic, Right-of-Way, Public Health, Turf Ornamental.

e. Arizona Department of Environmental Quality
1. NPDES Stormwater Construction General Permit Notice of Intent
2. NPDES Stormwater Construction General Permit Notice of Termination.
3. Stormwater Pollution Prevention Plan for Construction Activities
4. NPDES Hydrostatic Test Water Discharge General Permit (Waiver).
5. Compliance with City of Phoenix NPDES Permit provisions and Best Management Practices (BMPs) - BMPs relate to General Housekeeping, Pesticide/Herbicide/Fertilizer Application, Erosion and Sedimentation, and Discharge from Production Wells.

f. Arizona Department of Water Resources
1. Groundwater Dewatering Permit.

3.8.2 Permits To Be Acquired by the Government

The Government will be responsible for obtaining the following permits or compliance with laws and regulations that may regulate activities carried out for this Project, and the Contractor shall comply with any and all provisions of such permits that are applicable to the activities carried out under this Project:

a. Arizona Department of Environmental Quality
1. Individual NPDES Permit and associated Best Management Practices.

b. State Historic Preservation Office
1. Archaeological Clearance.

c. US Army Corps of Engineers
1. Congressionally authorized waiver from 404 permitting via CWA 404(r),and pursuant to an Environmental Impact Statement prepared in compliance with the National Environmental Policy Act of 1969

(42 U.S.C. 4321 et seq.)

d. US Fish and Wildlife Service
   1. Threatened & Endangered Species and Migratory Bird Treaty Act compliance.

3.9 AS-BUILT "RECORD" DRAWINGS

3.9.1 General

The Contractor shall prepare and submit as-built Drawings for the Government. The Contractor will be provided Electrical Bid Drawings in Bentley Microstation, Version J format. The as-built Drawings shall be a record of the construction as installed and completed by the Contractor. They shall include all the information shown on the contract set of Drawings and a record of all deviations, modifications, or changes from those Drawings, however minor, which were incorporated in the work, all additional work not appearing on the contract Drawings, and all changes which are made after final inspection of the contract work. In the event that the Contractor accomplishes additional work which changes the as-built conditions of the facility after submission of the as-built Drawings, the Contractor shall furnish revised and/or additional Drawings as required to depict as-built conditions. The requirements for these additional Drawings will be the same as for the as-built Drawings included in the original submission. The prints shall show the following information, but not be limited thereto:

a. The location and description of any utility lines or other installations of any kind or description known to exist within the construction area. The location includes dimensions to permanent features.

b. The location and dimensions of any changes within the structures.

c. Correct grade or alignment of roads, structures, or utilities if any changes were made from Contract Drawings.

d. Correct elevations if changes were made in site grading.

e. Changes in details of design or additional information obtained from working Drawings specified to be prepared and/or furnished by the Contractor including but not limited to fabrication, execution, installation Drawings and placing details, pipe sizes, insulation material, etc.

f. A survey of topography and grades of all river banks that were graded as a part of the project construction. A 3-D electronic survey of the bank topography shall be prepared using Microstation format.

g. All changes or modifications that result from the final inspection.

h. A description of the extent of any wastes removed during the project.

i. Separate 1 inch = 200 feet storm water outfall location maps that identify the outfall locations and outfall identification numbers.

3.9.2 Options

Where contract Drawings or specifications allow options, only the option selected for construction shall be shown on the as-built Drawings.

3.9.3 Preliminary As-Built Drawings

The Contractor shall maintain two (2) sets of full size blueline prints marked-up in red, one for use by the Contractor and one for use by the Government, to show the as-built conditions. The sets of as-built prints shall be kept current and available at the job site at all times. Information to be included on these preliminary Drawings shall conform to the requirements as stated above. Prior to submission of each monthly pay estimate, the Contracting Officer and the Contractor will jointly inspect the marked-up as-built prints. Failure to keep the as-built field data current shall be sufficient justification to withhold a percentage from the monthly pay estimate.

3.9.4 Submittal to Contracting Officer for Review and Approval

The Contractor shall use blue line Drawings to generate as-built Drawings for the project. Not later than two weeks after acceptance of the project by the Government, the Contractor shall submit to the Contracting Officer one (1) set of marked-up Preliminary As-Built Drawings and one (1) set of paper or mylar reproducible prints of the as-built Drawings. If upon review, the Drawings are found to contain errors and/or omissions, the Contractor will be notified and the as-built Drawings will be returned to the Contractor for corrections. The Contractor shall complete the corrections and return two (2) sets of corrected as-built Drawings to the Contracting Officer within ten (10) calendar days.

The Final As-Built Drawings shall be sealed by an Engineer registered in the State of Arizona. The Contracting Officer will provide a copy of the conformed documents to the Contractor in Bentley, Microstation, Version J. The Contractor will also provide electronic as built Drawings to the Government in Microstation, Version J, and Autodesk, Autocadd, Version 14 format, on compact disk.

3.10 WORKING HOURS

The Contractor shall restrict all construction activities to the following schedule:

Monday thru Friday	6:30 a.m. to 7 p.m.
Saturday	8:00 a.m. to 7 p.m.

No work will be permitted during any other hours or on Sundays or Federal Holidays without prior written approval from the Contracting Officer.

Disposal areas and haul routes utilized by the Contractor may require

restricted hauling hours.

3.11 USE OF EXPLOSIVES

Because of the proximity to residential and commercial areas as well as major utilities, the use of explosives will NOT be permitted for any construction activities on the project.

3.12 PROTECTION AND RESTORATION OF PROPERTY

The Contractor shall protect-in-place all existing structures and other features as identified on the Drawings, including but not limited to transmission towers, existing sand and gravel operation haul roads, and existing vegetation outside of the excavation limits.

The Contractor shall limit all construction activities to the right-of-way limits shown on the Drawings including dedicated street right-of-way, and shall not disturb any areas other than as required for construction as shown on the Drawings.

The Contractor will grade all Temporary Construction and Permanent Easement areas, and project areas which are disturbed during construction to the lines and grades shown on the Drawings, or as a minimum, where no lines and grades are shown, to a condition similar to or better than the pre-existing condition.

Existing river bottom Sand & Gravel Operations (SGO) haul roads in the bottom of the river will be maintained as follows:

a. The north/south haul road crossing the river upstream of 16th Street shall be maintained for the duration of the project for use by the SGO.

b. The east/west haul road that dips south of the ADOT drainage structure located just west of Central Avenue on the north side.

c. The east/west haul road that goes under 24th Street. And,

d. The east/west haul road along the northbank between 16th and 24th Streets.

The Contractor will allow SGO activities along the east/west and north/south haul roads during construction and provide a 14 day prior notice to the SGO if any of these haul roads are to be impacted. Once initial impact has taken place, the Contractor has 60 days to complete the work and return the haul road to its pre-existing condition. The Contractor shall coordinate with the SGO to determine if alternate access and alignments for the roads and ramps must be provided.

The Contractor will minimize damage to and the removal of existing vegetation within the project area that exists beyond required clearing limits. Haul roads and other construction access routes will be created in such a way to minimize such damage and removal whenever possible, and will be approved by the Contracting Officer before vegetation is removed.

3.13 CONTRACTOR'S RESPONSIBILITY FOR WORK

a. Construction activities will occur within the bottom of the Salt River. As recent as 1993 flows in excess of 100,000 cfs occurred in the river. Flows can occur at any time in the river, and nuisance flows are ever present in the river bottom. The Contractor shall protect his construction work and equipment from flows in the river. The Contracting Officer assumes no responsibility for notifying the Contractor of any anticipated flows, nor for any damages incurred by the Contractor to his equipment or to any of the Contractor's work as a result of any flows of water.

b. The Contractor shall provide the Contracting Officer at the pre-construction conference with his plan for managing flows.

c. The Contractor shall take all necessary action to protect the public from the construction work area including temporary safety fencing. The Contractor will also notify the Contracting Officer of any unauthorized personnel in the project area, including the presence of the general public.

d. In accordance with the Environmental Impact Statement the Contractor shall avoid all areas of standing or running water wherever possible, however it may be necessary to operate equipment, including vehicles in areas of water.

3.14 TRAFFIC CONTROL

Traffic control shall conform to Section 401 of the MAG Uniform Standard Specifications and COP Supplements except as modified herein.

This work shall consist of traffic control, and use of devices and flagmen or pilot cars in accordance with Section 401 of the COP Supplements and the City of Phoenix Traffic Barricade Manual, dated 1998.

a. Traffic Control Devices
All traffic and/or traffic control devices on this project shall be provided, maintained and/or controlled as specified in the City of Phoenix Traffic Barricade Manual, dated 1998.

b. Street Closure Permits
Permission to restrict city streets, sidewalks and alleys (street closure permits) shall be requested as specified in Section III of the City of Phoenix Traffic Barricade Manual.

c. Traffic Manual
Unless otherwise provided for in the following General Traffic Regulations, all traffic on this project shall be regulated as specified in Section IV of the City of Phoenix Traffic Barricade Manual.

d. Prior Approval

No deviation to the General Traffic Regulation will be allowed or implemented unless submitted to the Contracting Officer for review and approval two weeks prior to the proposed work.

e. City of Phoenix Coordination
The Contractor shall contact Tony Arviso, Construction Traffic Control, City of Phoenix, at 602-262-6235 to coordinate the traffic control plan.

3.14.1 General Traffic Regulations:

a. Local Access Requirements: The Contractor shall maintain local access to all side streets, access roads, driveways, alleys, and parking lots at all times unless specified to be closed herein or as shown on the traffic control plans, and shall notify residents 72 hours in advance of any restrictions which will affect their access. The Contractor shall restore the access as soon as possible. If the primary access cannot be restored in a timely manner, the Contractor shall provide an alternative which shall be predetermined with the residents prior to imposing any restrictions, and approved by the Contracting Officer.

b. Special Sign Requirements: The Contractor shall provide, erect and maintain advance notifications, and informational and directional access signs that may be required by the Contracting Officer.

c. Flagging of Traffic: No flagging of traffic will be permitted during the peak traffic hours of 6:00 a.m. to 8:30 a.m. and 4:00 p.m. to 7:00 p.m. weekdays. If construction requires, intermittent flagging will be allowed from 8:30 a.m. to 4:00 p.m. on weekdays and weekends to facilitate access for heavy construction equipment.

d. Traffic Control Plan: The Contractor shall submit a traffic control plan which shall implement all traffic control as required for approval, showing placement of all traffic control devices, including all conflicting signs to be covered/removed or relocated, or other features that may conflict with the placement of temporary signage. The plan shall be submitted to the Contracting Officer at the pre-construction meeting for review. The Contractor shall obtain approval from the Contracting Officer and the City of Phoenix, prior to implementation. Contact Tony Arviso/City of Phoenix at 602-262-6235.

e. At the time of the Pre-Construction conference, the Contractor shall designate an employee, other than the Project Superintendent, who is well qualified and experienced in construction traffic control and safety, to be available on the project site during all periods of construction to set up, maintain and coordinate safe barricading whenever construction restricts traffic. This individual shall be authorized to receive and fulfill instructions from the Contracting Officer and shall supervise and direct the work. Instructions and information given

by the Contracting Officer to this individual shall be considered as having been given to the Contractor.

3.14.2 Special Traffic Regulations

Contractor access to the river bottom is available at the following locations using City of Phoenix rights-of-way:

a. Left turns across traffic are acceptable only if there is a left turn center lane. If no center lane, then right turns only. Possible exceptions to this requirement may be provided by the City through an approved TCP.

b. Off duty uniformed officers shall be utilized for traffic control only as required by the City of Phoenix, and only as approved by the Contracting Officer. An off duty officer will be required wherever multiple lanes of traffic must be crossed with construction equipment.

c. A TCP must be provided to the City for review and approval for each access location prior to implementation of the plan. The TCP must include appropriate signage for "truck crossing", etc.

The Contractor shall restore and regrade the areas within the Temporary Construction Easement limits to the same grade as prior to construction. All trash, large rocks, other debris, etc. shall be removed and the easement area left in a neat and clean condition acceptable to the Contracting Officer.

3.15 CONSTRUCTION OF SIGNS

3.15.1 Project Safety and Hard Hat Signs

Project safety and hard hat signs shall be constructed as detailed on Figure 1,2, and safety signs. Government decals will be furnished by the Contracting Officer. Contractor is responsible for obtaining sponsor's decal.

3.15.2 Warning Signs

Warning Signs shall be constructed of plywood not less than 1/2-inch thick and shall be securely bolted to the supports with the bottom of the sign face 3 feet above the ground. The sign face shall be 2 x 4 feet, all letters shall be 4 inches in height, and the wording shall be: "WARNING: OVERHEAD TRANSMISSION LINES."

3.16 PAINTING SIGNS

All exposed surfaces and edges of plywood shall be given one coat of linseed oil and be wiped prior to applying primer. All exposed surfaces of signs and supports shall be given one coat of primer and 2 finish coats of white paint. Except as otherwise indicated, lettering on all signs shall be black and sized as indicated.

3.17 SCRAP MATERIAL

Materials indicated to be removed and not indicated to be salvaged, stored or reinstalled are designated as scrap and shall become the property of the Contractor and be removed from the site of work. The Contractor by signing this contract hereby acknowledges that he made due allowance for value, if any, of such scrap in the contract price.

3.18 PUBLIC SAFETY

Attention is invited to the CONTRACT CLAUSE: PERMITS AND RESPONSIBILITIES. The Contractor shall provide temporary fencing, barricades, and/or guards, as required, to provide protection in the interest of public safety. Whenever the Contractor's operations create a condition hazardous to the public, he shall furnish at his own expense and without cost to the Government, such flagmen and guards as are necessary to give adequate warning to the public of any dangerous conditions to be encountered and he shall furnish, erect, or maintain such fences, barricades, lights, signs and other devices as are necessary to prevent accidents and avoid damage or injury to the public. Flagmen and guards, while on duty and assigned to give warning and safety devices shall conform to applicable city, county, and state requirements. Should the Contractor appear to be neglectful or negligent in furnishing adequate warning and protection measures, the Contracting Officer may direct attention to the existence of a hazard and the necessary warning and protective measures shall be furnished and installed by the Contractor without additional cost to the Government. Should the Contracting Officer point out the inadequacy of warning and protective measures, such action of the Contracting Officer shall not relieve the Contractor from any responsibility for public safety or abrogate his obligation to furnish and pay for those devices. The installation of any general illumination shall not relieve the Contractor of his responsibility for furnishing and maintaining any protective facility.

3.19 RESERVOIR AREA COMPLETION

The work in the North 7th Avenue and Southeast 7th Street areas shall be substantially completed within one hundred eighty (180) days from contract NTP. This work shall include construction of the reservoirs, pump stations, and installation of underground piping and electrical.

-- End of Section --

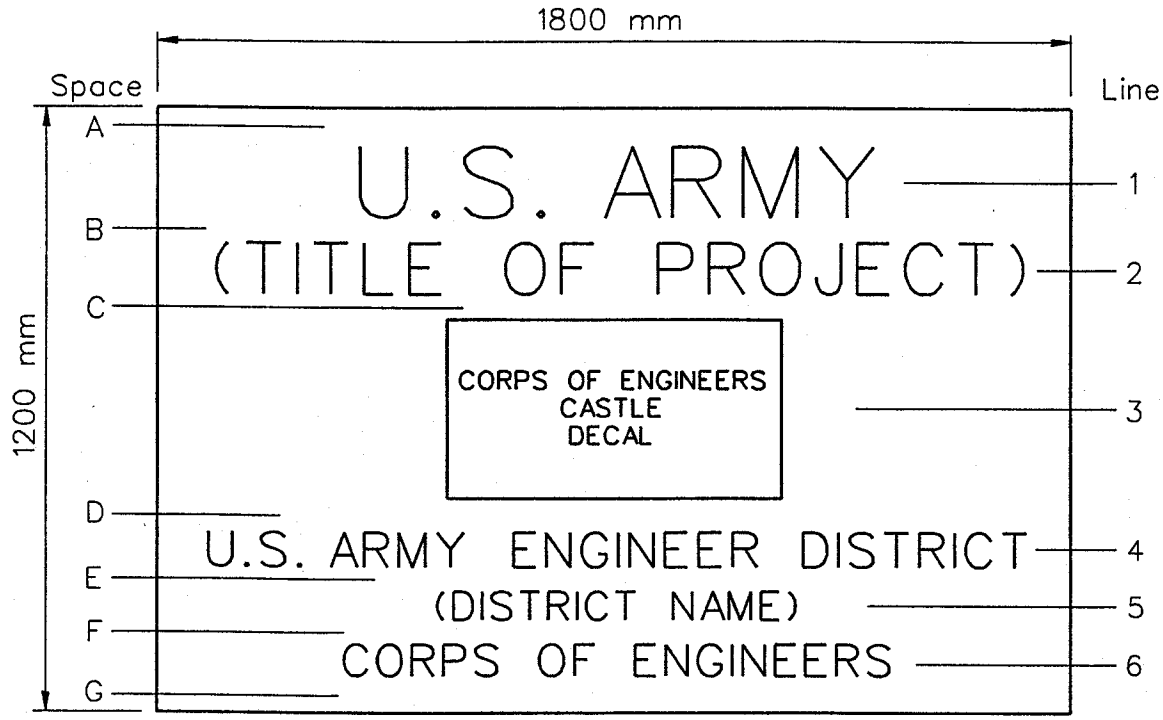

Space	Height	Line	Description	Letter Height	Stroke
A	75				
		1	U.S. ARMY	140	22
B	50				
		2	PROJECT NOMENCLATURE	100	16
C	50				
		3	CORPS OF ENGINEERS CASTLE (DECAL)	345	
D	70				
		4	U.S. ARMY ENGINEER DISTRICT	70	9
E	50				
		5	DISTRICT NAME	60	6
F	50				
		6	CORPS OF ENGINEERS	65	9
G	75				

Letter Color -- Black

PROJECT SIGN
(Army-Civil Works)

Figure 1
October 1996

All units are in millimeters.

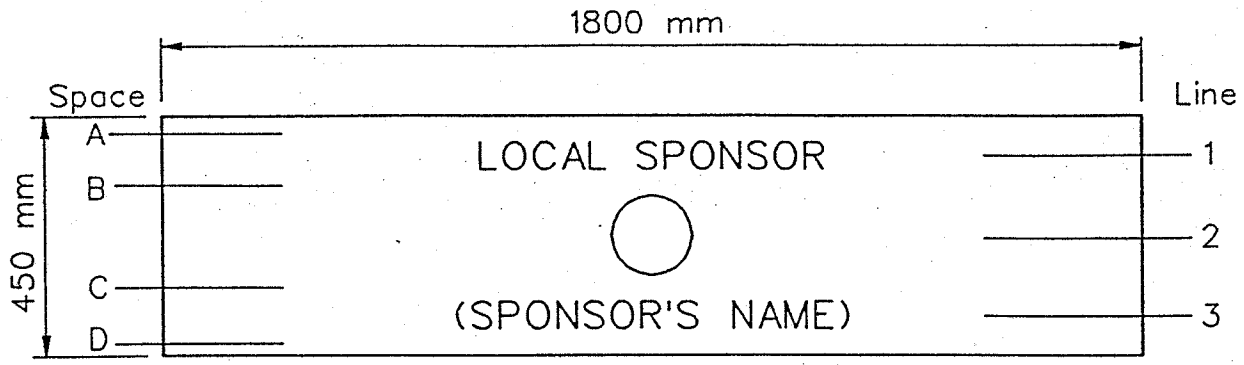

Space	Height	Line	Description	Letter Height	Stroke
A	50				
		1	LOCAL SPONSOR	50	9
B	50				
		2	SPONSOR'S EMBLEM (DECAL)		
C	50				
		3	(SPONSOR'S NAME)	50	9
D	50				

- OR -

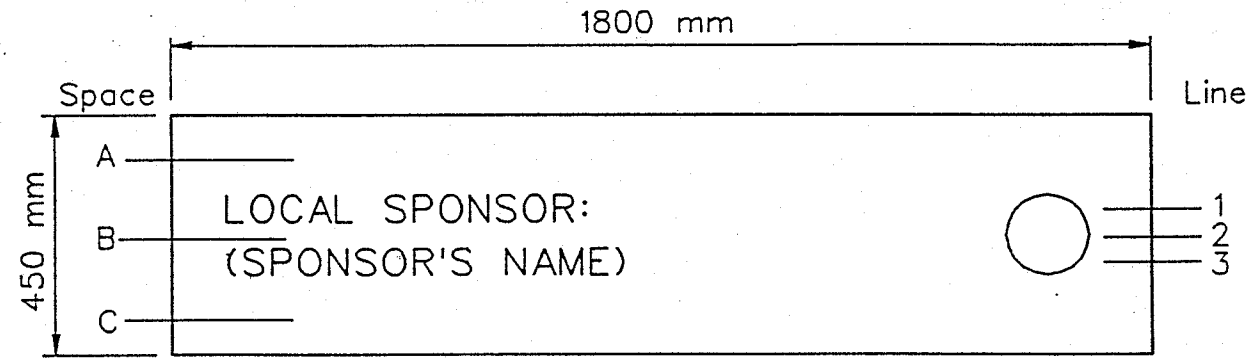

Space	Height	Line	Description	Letter Height	Stroke
A	150				
		1	LOCAL SPONSOR	50	9
B	50	2	SPONSOR'S EMBLEM (DECAL)		
		3	(SPONSOR'S NAME)	50	9
C	150				

Lettering Color -- Black

Figure 1A
October 1997

All units are in millimeters.

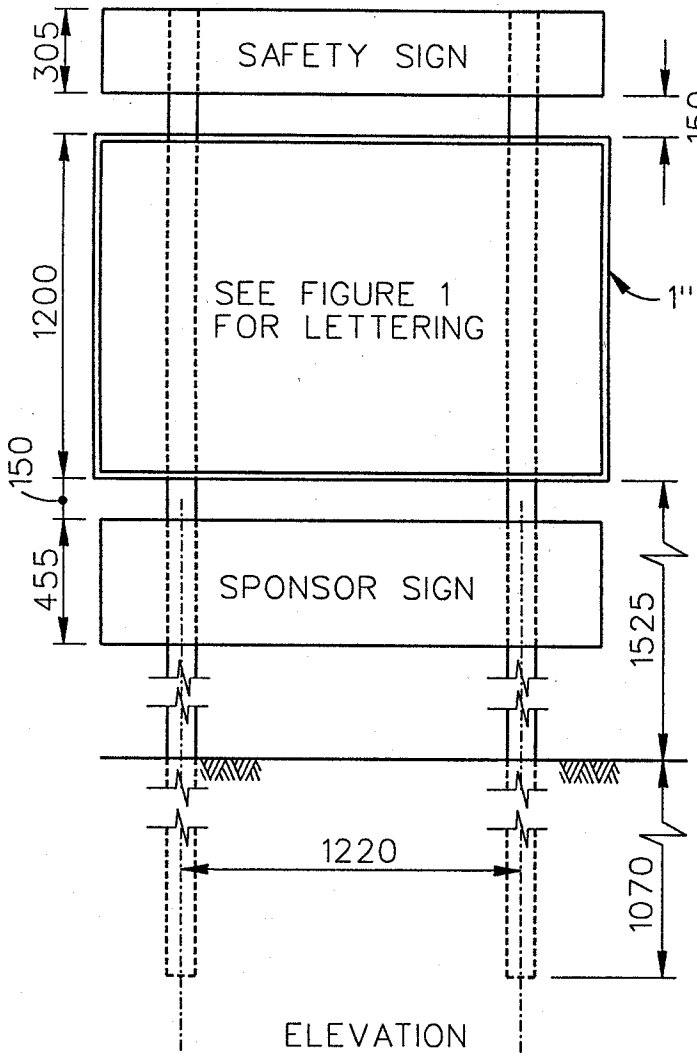

ELEVATION

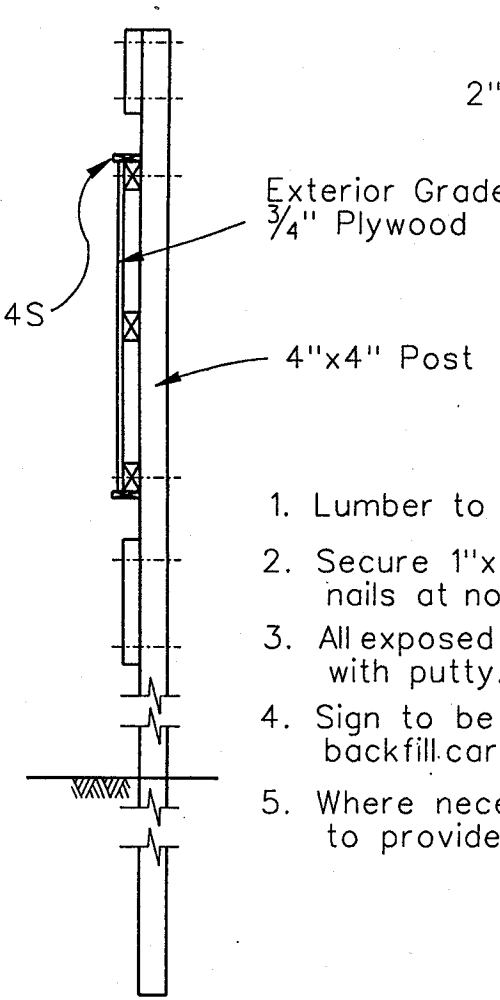

SECTION

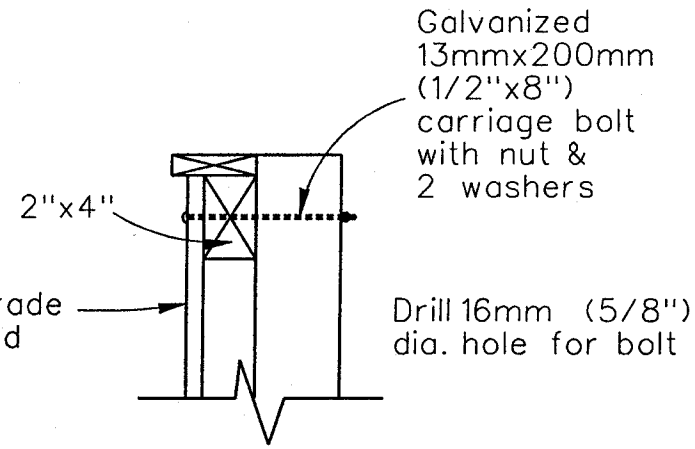

DETAIL

General Notes

1. Lumber to be cut & formed accurately.
2. Secure 1"x4" & plywood with 6d finish nails at not less than 305mm(12") O.C.
3. All exposed nails to be set & holes filled with putty.
4. Sign to be set in good solid ground & backfill carefully tamped into place.
5. Where necessary, posts shall be braced to provide a solid installation.

SIGN DETAILS

Figure 2
October 1996

All units are in millimeters unless otherwise indicated.

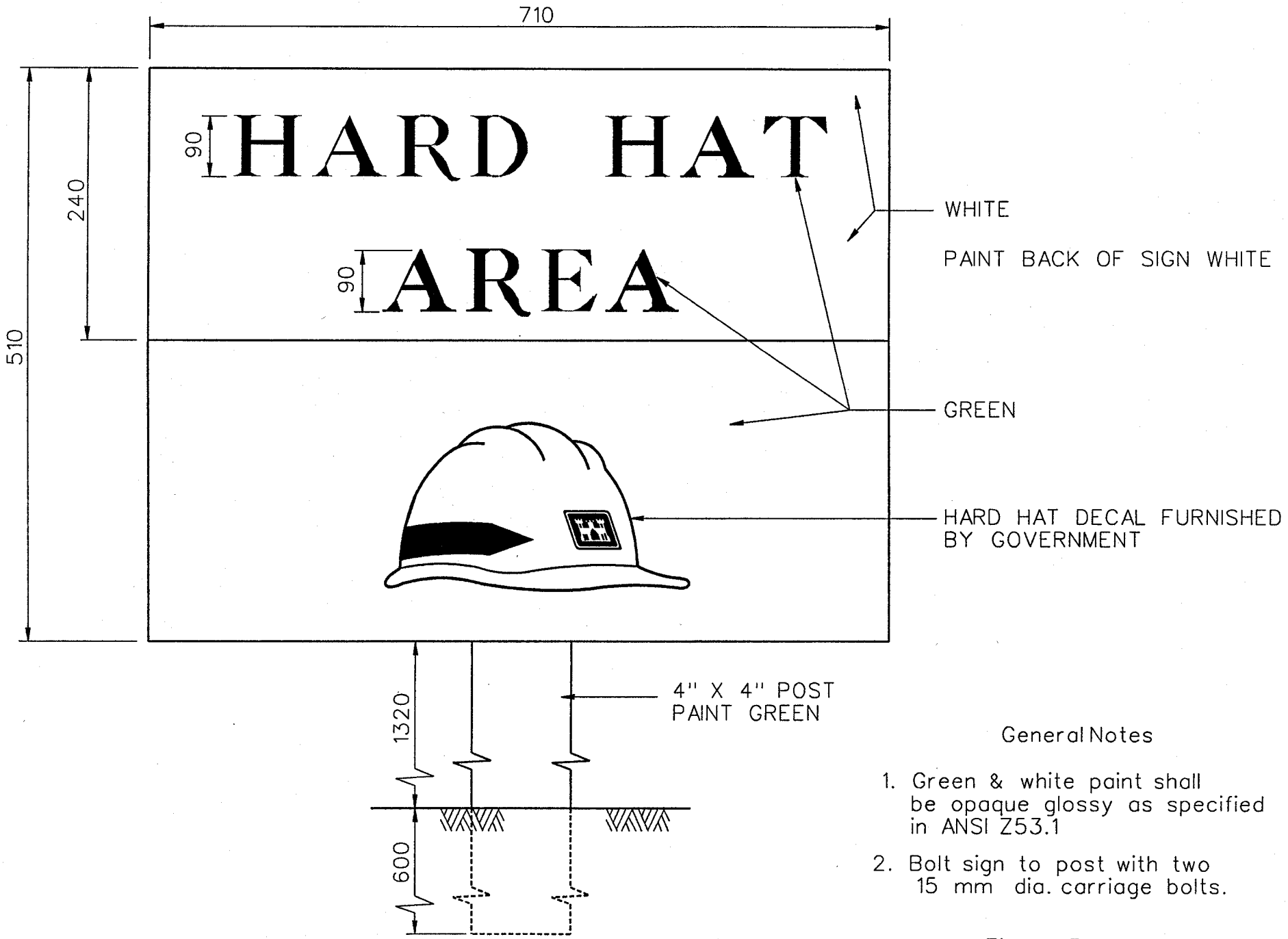

General Notes

1. Green & white paint shall be opaque glossy as specified in ANSI Z53.1
2. Bolt sign to post with two 15 mm dia. carriage bolts.

All units are in millimeters unless otherwise indicated.

Figure 3
October 1996

CORPS OF ENGINEERS

U.S. ARMY

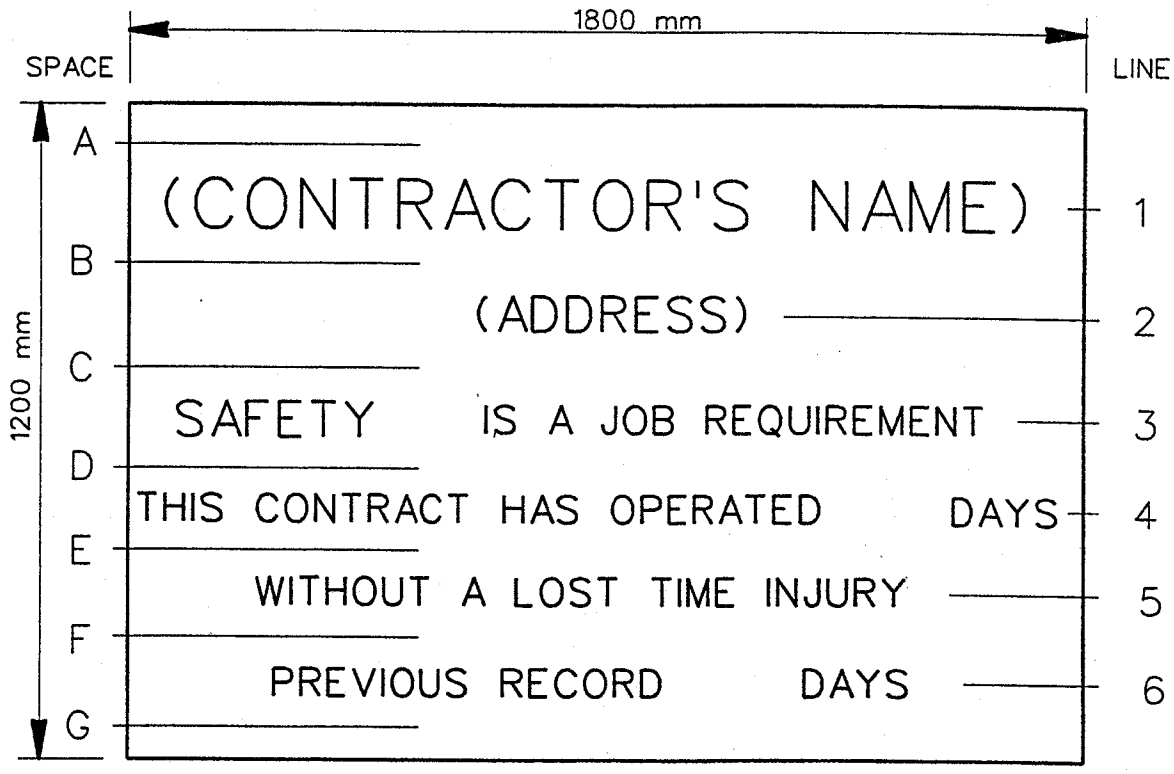

SPACE	HEIGHT	LINE	DESCRIPTION	LETTER HEIGHT
A	125			
		1	CONTRATOR'S NAME	125
B	75			
		2	ADDRESS	75
C	150			
		3	SAFETY IS A JOB REQUIREMENT	115 & 75
D	75			
		4	ALL LETTERING	75
E	75			
		5	ALL LETTERING	75
F	75			
		6	ALL LETTERING	75
G	125			

Notes

Lettering shall be black No. 27038 standard 595.
Sign shall be installed in the same manner as the Project Sign.

All units are in millimeters.

SAFETY SIGN
STANDARD DETAIL

SECTION TABLE OF CONTENTS

DIVISION 01 - GENERAL REQUIREMENTS

SECTION 01270

MEASUREMENT AND PAYMENT

1.1 SUBMITTALS
1.2 LUMP SUM PAYMENT ITEMS
1.2.1 Item No. 1, Clearing, Grubbing, and Demolition
1.2.1.1 Payment
1.2.1.2 Unit of Measure
1.2.2 Item No. 15, 7th Street Water Distribution Pumping Station
1.2.2.1 Payment
1.2.2.2 Unit of Measure
1.2.3 Item No. 16, 7TH Ave. Water Distribution Pumping Station
1.2.3.1 Payment
1.2.3.2 Unit of Measure
1.2.4 Item No. 17, Electrical and Controls Conduit and Wiring
1.2.4.1 Payment
1.2.4.2 Unit of Measure
1.2.5 Item No. 18, Reservoir Liner and Edge Treatment
1.2.5.1 Payment
1.2.5.2 Unit of Measure
1.2.6 Item No. 22, 11th Ave. Maintenance Road Bridge (North Bank)
1.2.6.1 Payment
1.2.6.2 Unit of Measure
1.2.7 Item No. 23, Central Ave. Maintenance Road Bridge (North Bank)
1.2.7.1 Payment
1.2.7.2 Unit of Measure
1.2.8 Item No. 8 and 9, Low Flow Channel Feed Conveyance
1.2.8.1 Payment
1.2.8.2 Unit of Measure
1.2.9 Item No. 6, Fence
1.2.9.1 Payment
1.2.9.2 Unit of Measure
1.2.10 Item No. 10, LLDPE Lined Canal
1.2.10.1 Payment
1.2.10.2 Unit of Measure
1.2.11 Item No. 7, Storm Drainage
1.2.11.1 Payment
1.2.11.2 Unit of Measure
1.2.12 Item No. 21, Soft Trail
1.2.12.1 Payment
1.2.12.2 Unit of Measure
1.3 UNIT PRICE PAYMENT ITEMS
1.3.1 Items No. 2a and 2b, General Site Excavation for Project Facilities
1.3.1.1 Payment

1.3.1.2 Measurement
1.3.1.3 Unit of Measure
1.3.2 Items No. 3a and 3b, General Site Fills and Embankments for Project Facilities
1.3.2.1 Payment
1.3.2.2 Measurement
1.3.2.3 Unit of Measure
1.3.3 Items No. 4a and 4b, Excavation and Disposal of Construction Debris, Household Waste, Inert Material, and Mixed Waste
1.3.3.1 Payment
1.3.3.2 Measurement
1.3.3.3 Unit of Measure
1.3.4 Item No. 5a, Gabion Basket Slope Protection
1.3.4.1 Payment
1.3.4.2 Measurement
1.3.4.3 Unit of Measure
1.3.5 Item No. 5b, Gabion Mattress Slope Protection
1.3.5.1 Payment
1.3.5.2 Measurement
1.3.5.3 Unit of Measure
1.3.6 Item No. 11, Pressurized Distribution Supply Water Piping (10" HDPE)
1.3.6.1 Payment
1.3.6.2 Measurement
1.3.6.3 Unit of Measure
1.3.7 Item No. 12, Pressurized Distribution Water Supply Piping Connected to Bridge (8" DIP)
1.3.7.1 Payment
1.3.7.2 Measurement
1.3.7.3 Unit of Measure
1.3.8 Item No. 13, Raw Water Supply Piping (14" HDPE)
1.3.8.1 Payment
1.3.8.2 Measurement
1.3.8.3 Unit of Measure
1.3.9 Item No. 14, Raw Water Supply Piping Connected to Bridge (12" DIP)
1.3.9.1 Payment
1.3.9.2 Measurement
1.3.9.3 Unit of Measure
1.3.10 Item No. 19, Maintenance Roads Base Course
1.3.10.1 Payment
1.3.10.2 Measurement
1.3.10.3 Unit of Measure
1.3.11 Item No. 20, Maintenance Roads Asphaltic Concrete
1.3.11.1 Payment
1.3.11.2 Measurement
1.3.11.3 Unit of Measure
1.3.12 Item No. 24, Tire Removal
1.3.12.1 Payment
1.3.12.2 Measurement
1.3.12.3 Unit of Measure
1.3.13 Item No. 25, Double Containment for 10" Pressure Water Distribution Supply Water Piping
1.3.13.1 Payment

1.3.13.2 Measurement
1.3.13.3 Unit of Measure
1.3.14 Item No. 26, Double Containment for 14" Raw Water Supply Piping
1.3.14.1 Payment
1.3.14.2 Measurement
1.3.14.3 Unit of Measure

PART 2 PRODUCTS (Not Applicable)

PART 3 EXECUTION (Not Applicable)

-- End of Section Table of Contents --

SECTION 01270

MEASUREMENT AND PAYMENT

1.1 SUBMITTALS

Government approval is required for submittals with a "G" designation; submittals not having a "G" designation are for information only. When used, a designation following the "G" designation identifies the office that will review the submittal for the Government. The following shall be submitted in accordance with Section 01330 SUBMITTAL PROCEDURES:

SD-03 Product Data

Weight Certificates; G, RE

Submit certified weight certificates for Maintenance Roads Asphaltic Concrete.

1.2 LUMP SUM PAYMENT ITEMS

Payment items for the work of this contract for which contract lump sum payments will be made are listed in the BIDDING SCHEDULE and described below. All costs for items of work, which are not specifically mentioned to be included in a particular lump sum or unit price payment item, shall be included in the listed lump sum item most closely associated with the work involved. The lump sum price and payment made for each item listed shall constitute full compensation for furnishing all plant, labor, materials, and equipment, and performing any associated Contractor quality control, and performing any associated Contractor quality control reports, mobilization, demobilization, obtaining bonds, insurance, and permits, providing temporary facilities and utilities, payment for usage of utilities, furnishing and installing project and safety signs, furnishing, installing, and maintaining the Government field office, scheduling, providing submittals, attending meetings, preparing as-built Drawings, providing traffic control, environmental protection, meeting safety requirements, tests and reports, and for performing all work required for which separate payment is not otherwise provided.

1.2.1 Item No. 1, Clearing, Grubbing, and Demolition

1.2.1.1 Payment

Payment includes all labor and equipment required for clearing, grubbing, demolition of any specified structures, and protection of all other structures, and disposal of waste identified within the project limits.

1.2.1.2 Unit of Measure

Unit of Measure: Lump sum.

1.2.2 Item No. 15, 7th Street Water Distribution Pumping Station

1.2.2.1 Payment

Payment includes all excavation, grading, compacting, surface restoration, hydrostatic pressure testing, and the furnishing and placing of backfill, structural fill, piping, intake flume, fittings, and appurtenances, prefabricated pumping station, screen, concrete, pipe supports, reinforcing steel, chain link fence roof, screen cloth, hatches, chain link gates, masonry blocks, radio tower, electrical equipment and service for pumping station instrumentation and control, and all other miscellaneous items required to complete the Water Distribution Pumping Station as shown on the Drawings and as specified.

1.2.2.2 Unit of Measure

Unit of Measure: Lump sum.

1.2.3 Item No. 16, 7TH Ave. Water Distribution Pumping Station

1.2.3.1 Payment

Payment includes all excavation, grading, compacting, surface restoration, hydrostatic pressure testing, and the furnishing and placing of backfill, structural fill, piping, intake flume, fittings, and appurtenances, prefabricated pumping station, screen, concrete, pipe supports, reinforcing steel, hatches, chain link gates, chain link fence, radio tower, electrical equipment and service for pumping station instrumentation and control, and all other miscellaneous items required to complete the Water Distribution Pumping Station as shown on the Drawings and as specified.

1.2.3.2 Unit of Measure

Unit of Measure: Lump sum.

1.2.4 Item No. 17, Electrical and Controls Conduit and Wiring

1.2.4.1 Payment

Payment includes all labor and equipment required for trench excavation, processing of on-site material or importing of material required for backfill, grading, compacting, surface restoration, bridge supports for the buried and bridge crossing electric conduits and control conduits.

1.2.4.2 Unit of Measure

Unit of Measure: Lump sum.

1.2.5 Item No. 18, Reservoir Liner and Edge Treatment

1.2.5.1 Payment

Payment includes all labor and equipment required for excavation, backfilling and the furnishing and placement of the LLDPE liner, retaining wall, mortar, river rock, sand protective fill over liner, structural backfill, shotcrete and all miscellaneous items required for a reservoir, as shown on the Drawings and as specified.

1.2.5.2 Unit of Measure

Unit of Measure: Lump sum.

1.2.6 Item No. 22, 11th Ave. Maintenance Road Bridge (North Bank)

1.2.6.1 Payment

Payment includes all labor and equipment required for the excavation, backfilling, compacting, and grading, and the furnishing and placement of the concrete, reinforcing steel, bridge deck, steel, boulders, and all miscellaneous items required for a complete bridge, as shown on the Drawings.

1.2.6.2 Unit of Measure

Unit of Measure: Lump sum.

1.2.7 Item No. 23, Central Ave. Maintenance Road Bridge (North Bank)

1.2.7.1 Payment

Payment includes all labor and equipment required for the excavation, backfilling, compacting, and grading, and the furnishing and placement of the concrete, reinforcing steel, bridge deck, steel, boulders, and all miscellaneous items required for a complete bridge, as shown on the Drawings.

1.2.7.2 Unit of Measure

Unit of Measure: Lump sum.

1.2.8 Item No. 8 and 9, Low Flow Channel Feed Conveyance

1.2.8.1 Payment

Payment includes all labor and equipment required for trench excavation, processing of on-site material or importing material required for backfill, grading, compacting, leak testing, and the furnishing and placing of concrete, backfill, piping and appurtenances, valves, valve boxes, flow meters, and pipe zone material.

1.2.8.2 Unit of Measure

Unit of Measure: Lump sum.

1.2.9 Item No. 6, Fence

1.2.9.1 Payment

Payment includes all labor and equipment required for the excavation, backfilling, and grading and the furnishing and placement of the fencing and gates.

1.2.9.2 Unit of Measure

Unit of Measure: Lump sum.

1.2.10 Item No. 10, LLDPE Lined Canal

1.2.10.1 Payment

Payment includes all labor and equipment required for excavation, backfilling, compacting, grading, and the furnishing and placement of the linear low-density polyethylene (LLDPE) liner, protective layer, geotextile fabric, and rounded river rock.

1.2.10.2 Unit of Measure

Unit of Measure: Lump sum.

1.2.11 Item No. 7, Storm Drainage

1.2.11.1 Payment

Payment includes all labor and equipment for the excavation, backfilling, compacting surface restoration, furnishing and placement of stormwater outfall headwalls and culverts, and end sections.

1.2.11.2 Unit of Measure

Unit of Measure: Lump sum.

1.2.12 Item No. 21, Soft Trail

1.2.12.1 Payment

Payment includes all labor and equipment for grading/shaping the soft trail system. Payment also includes all labor and equipment for the excavation, backfilling, compacting and furnishing and placement of the soft trail handrail and accessories.

1.2.12.2 Unit of Measure

Unit of Measure: Lump sum.

1.3 UNIT PRICE PAYMENT ITEMS

Payment items for the work of this contract on which the contract unit price payments will be made are listed in the BIDDING SCHEDULE and described below. The unit price and payment made for each item listed shall constitute full compensation for furnishing all plant, labor,

materials, and equipment, and performing any associated Contractor quality control, environmental protection, meeting safety requirements, tests and reports, and for performing all work required for each of the unit price items.

1.3.1 Items No. 2a and 2b, General Site Excavation for Project Facilities

1.3.1.1 Payment

Payment includes all labor and equipment, including excavation and disposition of excess excavated material and unsuitable material, required for excavation for the bridge undercrossings, paved maintenance roads, and other features on the project site. Specifically excluded from this item is any excavation below finish grade required to install liners, piping, structures, and conduits.

1.3.1.2 Measurement

The total quantity of excavated material for which payment will be made will be the theoretical quantity between the ground surface as determined by a survey and the grade and slope of the theoretical cross sections indicated. No allowance will be made for overdepth excavation or for the removal of any material outside the required slope lines unless authorized.

1.3.1.3 Unit of Measure

Unit of measure: Cubic yard.

1.3.2 Items No. 3a and 3b, General Site Fills and Embankments for Project Facilities

1.3.2.1 Payment

Payment includes all labor and equipment required for processing of on-site material, placement of fill, compacting, grading, and water required for the furnishing and placement of any fills and embankments for the canal, paved maintenance roads and other features on the project site.

1.3.2.2 Measurement

The total quantity of fill material for which payment will be made will be the theoretical quantity between the ground surface as determined by a survey and the grade and slope of the theoretical cross sections indicated. No allowance will be made for additional fill provided outside the required slope lines unless authorized.

1.3.2.3 Unit of Measure

Unit of measure: Cubic yard.

1.3.3 Items No. 4a and 4b, Excavation and Disposal of Construction Debris, Household Waste, Inert Material, and Mixed Waste

1.3.3.1 Payment

Payment includes all labor and equipment required for excavation and disposition of all construction debris, household waste, inert material, and mixed waste.

1.3.3.2 Measurement

The total quantity of excavated material for which payment will be made will be based on the measurements of the stockpile of construction debris, household waste, inert material, and mixed waste that has been segregated from the other excavated material.

1.3.3.3 Unit of Measure

Unit of measure: Cubic yard.

1.3.4 Item No. 5a, Gabion Basket Slope Protection

1.3.4.1 Payment

Payment includes all labor and equipment required for furnishing and placing the reinforcement mat, geotextile filter fabric, gabion baskets, and rock for filling the gabion baskets.

1.3.4.2 Measurement

Gabion blanket slope protection will be measured based on the amount of gabion blanket slope protection installed in the accepted work.

1.3.4.3 Unit of Measure

Unit of Measure: Square foot.

1.3.5 Item No. 5b, Gabion Mattress Slope Protection

1.3.5.1 Payment

Payment includes all labor and equipment required for furnishing and placing the reinforcement mat, geotextile filter fabric, gabion mattress, and rock for filling the gabion mattress.

1.3.5.2 Measurement

Gabion mattress slope protection will be measured based on the amount of gabion mattress slope protection installed in the accepted work.

1.3.5.3 Unit of Measure

Unit of Measure: Cubic Yard.

1.3.6 Item No. 11, Pressurized Distribution Supply Water Piping (10" HDPE)

1.3.6.1 Payment

Payment includes all labor and equipment required for trench excavation, processing of on-site material or importing material required for backfill, grading, compacting, hydrostatic pressure testing, surface restoration, and the furnishing and placing of concrete for thrust blocks, backfill, piping and appurtenances, restrained joints, air valves, valves, valve boxes, blind flanges, pipe zone material, and detectable tape.

1.3.6.2 Measurement

Pressurized Distribution Water Supply Piping will be measured based on the amount of pressurized water distribution pipe installed in the accepted work.

1.3.6.3 Unit of Measure

Unit of measure: Linear foot.

1.3.7 Item No. 12, Pressurized Distribution Water Supply Piping Connected to Bridge (8" DIP)

1.3.7.1 Payment

Payment includes all labor and equipment required for connecting to bridge, corrosion protection, hydrostatic pressure testing, and the furnishing and placing of pipe, fittings and appurtenances, pipe supports, and restrained joints.

1.3.7.2 Measurement

Pressurized Distribution Water Supply Piping Connected to Bridge (8" DIP) will be measured based on the amount of pressurized distribution water supply piping connected to bridge installed in the accepted work.

1.3.7.3 Unit of Measure

Unit of measure: Linear foot.

1.3.8 Item No. 13, Raw Water Supply Piping (14" HDPE)

1.3.8.1 Payment

Payment includes all labor and equipment required for trench excavation, processing of on-site material or importing material required for backfill, grading, compacting, hydrostatic pressure testing, surface restoration, and the furnishing and placing of concrete for thrust blocks, backfill, piping and appurtenances, restrained joints, air valves, valves, valve boxes, blind flanges, pipe zone material, and detectable tape.

1.3.8.2 Measurement

Raw Water Supply Piping (14" HDPE) will be measured based on the amount of raw water supply pipe installed in the accepted work.

1.3.8.3 Unit of Measure

Unit of measure: Linear foot.

1.3.9 Item No. 14, Raw Water Supply Piping Connected to Bridge (12" DIP)

1.3.9.1 Payment

Payment includes all labor and equipment required for connecting to bridge, corrosion protection, hydrostatic pressure testing, and the furnishing and placing of pipe, fittings and appurtenances, pipe supports, and restrained joints.

1.3.9.2 Measurement

Raw water supply piping connected to bridge (12" DIP) will be measured based on the amount of raw water supply piping connected to the bridge in the accepted work.

1.3.9.3 Unit of Measure

Unit of measure: Linear foot.

1.3.10 Item No. 19, Maintenance Roads Base Course

1.3.10.1 Payment

Payment includes all labor and equipment required for compacting, grading, testing, and furnishing and placing of the base course for the maintenance road.

1.3.10.2 Measurement

Maintenance Roads Base Course will be measured based upon the number of cubic yards of base course material used in the accepted work.

1.3.10.3 Unit of Measure

Unit of Measure: Cubic yard.

1.3.11 Item No. 20, Maintenance Roads Asphaltic Concrete

1.3.11.1 Payment

Payment includes all labor and equipment required preparation of the hot mix, compaction, grading, testing, and furnishing and placing the aggregate, asphalt cement, joints for the access road.

1.3.11.2 Measurement

Maintenance Roads Asphaltic Concrete will be measured based on the number of tons of asphalt concrete mixture used in the accepted work. Asphalt concrete shall be weighed after mixing, and no separate payment will be made for weight of asphalt cement material incorporated herein. The Contracting Officer may elect to accept certified weight certificates

furnished by a public weighmaster in lieu of scale weights at the jobsite.

1.3.11.3 Unit of Measure

Unit of measure: Ton (2,000 pounds).

1.3.12 Item No. 24, Tire Removal

1.3.12.1 Payment

Payment for Tire Removal will be made at the applicable contract price per ton, which payment shall constitute full payment for removal, separation, cleaning if necessary, loading, hauling, and proper disposal of tires at an approved facility.

1.3.12.2 Measurement

Measurement for Tire Removal will be by the ton as determined by the weight tickets from certified scales at the disposal facility.

1.3.12.3 Unit of Measure

Unit of measure: Ton (2,000 pounds).

1.3.13 Item No. 25, Double Containment for 10" Pressure Water Distribution Supply Water Piping

1.3.13.1 Payment

Payment includes all labor and equipment required for furnishing and installing the double containment piping.

1.3.13.2 Measurement

Measurement for dual contained piping will be based on the amount of double containment piping installed in the accepted work.

1.3.13.3 Unit of Measure

Unit of measure: Linear foot.

1.3.14 Item No. 26, Double Containment for 14" Raw Water Supply Piping

1.3.14.1 Payment

Payment includes all labor and equipment required for furnishing and installing the double containment piping.

1.3.14.2 Measurement

Measurement for dual contained piping will be based on the amount of double containment piping installed in the accepted work.

1.3.14.3 Unit of Measure

Unit of measure: Linear foot.

PART 2 PRODUCTS (Not Applicable)

PART 3 EXECUTION (Not Applicable)

-- End of Section --

SECTION TABLE OF CONTENTS

DIVISION 01 - GENERAL REQUIREMENTS

SECTION 01312

QUALITY CONTROL SYSTEM (QCS)

PART 1 GENERAL

1.1 GENERAL
1.1.1 Correspondence and Electronic Communications
1.1.2 Other Factors
1.2 QCS SOFTWARE
1.3 SYSTEM REQUIREMENTS
1.4 RELATED INFORMATION
1.4.1 QCS User Guide
1.4.2 Contractor Quality Control(CQC) Training
1.5 CONTRACT DATABASE
1.6 DATABASE MAINTENANCE
1.6.1 Administration
1.6.1.1 Contractor Information
1.6.1.2 Subcontractor Information
1.6.1.3 Correspondence
1.6.1.4 Equipment
1.6.1.5 Management Reporting
1.6.2 Finances
1.6.2.1 Pay Activity Data
1.6.2.2 Payment Requests
1.6.3 Quality Control (QC)
1.6.3.1 Daily Contractor Quality Control (CQC) Reports
1.6.3.2 Deficiency Tracking
1.6.3.3 Three-Phase Control Meetings
1.6.3.4 Accident/Safety Tracking
1.6.3.5 Features of Work
1.6.3.6 QC Requirements
1.6.4 Submittal Management
1.6.5 Schedule
1.6.6 Import/Export of Data
1.7 IMPLEMENTATION
1.8 DATA SUBMISSION VIA COMPUTER DISKETTE OR CD-ROM
1.8.1 File Medium
1.8.2 Disk or CD-ROM Labels
1.8.3 File Names
1.9 MONTHLY COORDINATION MEETING
1.10 NOTIFICATION OF NONCOMPLIANCE

-- End of Section Table of Contents --

SECTION 01312

QUALITY CONTROL SYSTEM (QCS)

PART 1 GENERAL

1.1 GENERAL

The Government will use the Resident Management System for Windows (RMS) to assist in its monitoring and administration of this contract. The Contractor shall use the Government-furnished Construction Contractor Module of RMS, referred to as QCS, to record, maintain, and submit various information throughout the contract period. This joint Government-Contractor use of RMS and QCS will facilitate electronic exchange of information and overall management of the contract. QCS provides the means for the Contractor to input, track, and electronically share information with the Government in the following areas:

Administration
Finances
Quality Control
Submittal Monitoring
Scheduling
Import/Export of Data

1.1.1 Correspondence and Electronic Communications

For ease and speed of communications, both Government and Contractor will, to the maximum extent feasible, exchange correspondence and other documents in electronic format. Correspondence, pay requests and other documents comprising the official contract record shall also be provided in paper format, with signatures and dates where necessary. Paper documents will govern, in the event of discrepancy with the electronic version.

1.1.2 Other Factors

Particular attention is directed to Contract Clause, "Schedules for Construction Contracts", Contract Clause, "Payments", Section 01200, GENERAL REQUIREMENTS, Section 01330, SUBMITTAL PROCEDURES, and Section 01451, CONTRACTOR QUALITY CONTROL, which have a direct relationship to the reporting to be accomplished through QCS. Also, there is no separate payment for establishing and maintaining the QCS database; all costs associated therewith shall be included in the contract pricing for the work.

1.2 QCS SOFTWARE

QCS is a Windows-based program that can be run on a stand-alone personal computer or on a network. The Government will make available the QCS software to the Contractor after award of the construction contract. Prior to the Pre-Construction Conference, the Contractor shall be responsible to

download, install and use the latest version of the QCS software from the Government's RMS Internet Website. Upon specific justification and request by the Contractor, the Government can provide QCS on 3-1/2 inch high-density diskettes or CD-ROM. Any program updates of QCS will be made available to the Contractor via the Government RMS Website as they become available.

1.3 SYSTEM REQUIREMENTS

The following listed hardware and software is the minimum system configuration that the Contractor shall have to run QCS:

Hardware

IBM-compatible PC with 200 MHz Pentium or higher processor

32+ MB RAM

4 GB hard drive disk space for sole use by the QCS system

3 1/2 inch high-density floppy drive

Compact disk (CD) Reader

Color monitor

Laser printer compatible with HP LaserJet III or better, with minimum 4 MB installed memory.

Connection to the Internet, minimum 28 BPS

Software

MS Windows 95 or newer version operating system (MS Windows NT 4.0 or newer is recommended)

Word Processing software compatible with MS Word 97 or newer

Internet browser

The Contractor's computer system shall be protected by virus protection software that is regularly upgraded with all issued manufacturer's updates throughout the life of the contract.

Electronic mail (E-mail) compatible with MS Outlook

1.4 RELATED INFORMATION

1.4.1 QCS User Guide

After contract award, the Contractor shall download instructions for the installation and use of QCS from the Government RMS Internet Website; the Contractor can obtain the current address from the Government. In case of justifiable difficulties, the Government will provide the Contractor with a

CD-ROM containing these instructions.

1.4.2 Contractor Quality Control(CQC) Training

The use of QCS will be discussed with the Contractor's QC System Manager during the mandatory CQC Training class.

1.5 CONTRACT DATABASE

Prior to the pre-construction conference, the Government shall provide the Contractor with basic contract award data to use for QCS. The Government will provide data updates to the Contractor as needed, generally by files attached to E-mail. These updates will generally consist of submittal reviews, correspondence status, QA comments, and other administrative and QA data.

1.6 DATABASE MAINTENANCE

The Contractor shall establish, maintain, and update data for the contract in the QCS database throughout the duration of the contract. The Contractor shall establish and maintain the QCS database at the Contractor's site office. Data updates to the Government shall be submitted by E-mail with file attachments, e.g., daily reports, schedule updates, payment requests. If permitted by the Contracting Officer, a data diskette or CD-ROM may be used instead of E-mail (see Paragraph DATA SUBMISSION VIA COMPUTER DISKETTE OR CD-ROM). The QCS database typically shall include current data on the following items:

1.6.1 Administration

1.6.1.1 Contractor Information

The database shall contain the Contractor's name, address, telephone numbers, management staff, and other required items. Within 14 calendar days of receipt of QCS software from the Government, the Contractor shall deliver Contractor administrative data in electronic format via E-mail.

1.6.1.2 Subcontractor Information

The database shall contain the name, trade, address, phone numbers, and other required information for all subcontractors. A subcontractor must be listed separately for each trade to be performed. Each subcontractor/trade shall be assigned a unique Responsibility Code, provided in QCS. Within 14 calendar days of receipt of QCS software from the Government, the Contractor shall deliver subcontractor administrative data in electronic format via E-mail.

1.6.1.3 Correspondence

All Contractor correspondence to the Government shall be identified with a serial number. Correspondence initiated by the Contractor's site office shall be prefixed with "S". Letters initiated by the Contractor's home (main) office shall be prefixed with "H". Letters shall be numbered starting from 0001. (e.g., H-0001 or S-0001). The Government's letters to

the Contractor will be prefixed with "C".

1.6.1.4 Equipment

The Contractor's QCS database shall contain a current list of equipment planned for use or being used on the jobsite, including the most recent and planned equipment inspection dates.

1.6.1.5 Management Reporting

QCS includes a number of reports that Contractor management can use to track the status of the project. The value of these reports is reflective of the quality of the data input, and is maintained in the various sections of QCS. Among these reports are: Progress Payment Request worksheet, QA/QC comments, Submittal Register Status, Three-Phase Inspection checklists.

1.6.2 Finances

1.6.2.1 Pay Activity Data

The QCS database shall include a list of pay activities that the Contractor shall develop in conjunction with the construction schedule. The sum of all pay activities shall be equal to the total contract amount, including modifications. Pay activities shall be grouped by Contract Line Item Number (CLIN), and the sum of the activities shall equal the amount of each CLIN. The total of all CLINs equals the Contract Amount.

1.6.2.2 Payment Requests

All progress payment requests shall be prepared using QCS. The Contractor shall complete the payment request worksheet and include it with the payment request. The work completed under the contract, measured as percent or as specific quantities, shall be updated at least monthly. After the update, the Contractor shall generate a payment request report using QCS. The Contractor shall submit the payment requests with supporting data by E-mail with file attachment(s). If permitted by the Contracting Officer, a data diskette may be used instead of E-mail. A signed paper copy of the approved payment request is also required, which shall govern in the event of discrepancy with the electronic version.

1.6.3 Quality Control (QC)

QCS provides a means to track implementation of the 3-phase QC Control System, prepare daily reports, identify and track deficiencies, document progress of work, and support other Contractor QC requirements. The Contractor shall maintain this data on a daily basis. Entered data will automatically output to the QCS generated daily report. The Contractor shall provide the Government a Contractor Quality Control (CQC) Plan within the time required in Section 01451, CONTRACTOR QUALITY CONTROL. Within seven calendar days of Government acceptance, the Contractor shall submit a data diskette or CD-ROM reflecting the information contained in the accepted CQC Plan: schedule, pay activities, features of work, submittal register, QC requirements, and equipment list.

1.6.3.1 Daily Contractor Quality Control (CQC) Reports

QCS includes the means to produce the Daily CQC Report. The Contractor may use other formats to record basic QC data. However, the Daily CQC Report generated by QCS shall be the Contractor's official report. Data from any supplemental reports by the Contractor shall be summarized and consolidated onto the QCS-generated Daily CQC Report. Daily CQC Reports shall be submitted as required by Section 01451, CONTRACTOR QUALITY CONTROL. Reports shall be submitted electronically to the Government using E-mail or diskette within 24 hours after the date covered by the report. Use of either mode of submittal shall be coordinated with the Government representative. The Contractor shall also provide the Government a signed, printed copy of the daily CQC report.

1.6.3.2 Deficiency Tracking

The Contractor shall use QCS to track deficiencies. Deficiencies identified by the Contractor will be numerically tracked using QC punch list items. The Contractor shall maintain a current log of its QC punch list items in the QCS database. The Government will log the deficiencies it has identified using its QA punch list items. The Government's QA punch list items will be included in its export file to the Contractor. The Contractor shall regularly update the correction status of both QC and QA punch list items.

1.6.3.3 Three-Phase Control Meetings

The Contractor shall maintain scheduled and actual dates and times of preparatory and initial control meetings in QCS.

1.6.3.4 Accident/Safety Tracking

The Government will issue safety comments, directions, or guidance whenever safety deficiencies are observed. The Government's safety comments will be included in its export file to the Contractor. The Contractor shall regularly update the correction status of the safety comments. In addition, the Contractor shall utilize QCS to advise the Government of any accidents occurring on the jobsite. This brief supplemental entry is not to be considered as a substitute for completion of mandatory reports, e.g., ENG Form 3394 and OSHA Form 200.

1.6.3.5 Features of Work

The Contractor shall include a complete list of the features of work in the QCS database. A feature of work may be associated with multiple pay activities. However, each pay activity (see subparagraph "Pay Activity Data" of paragraph "Finances") will only be linked to a single feature of work.

1.6.3.6 QC Requirements

The Contractor shall develop and maintain a complete list of QC testing, transferred and installed property, and user training requirements in QCS. The Contractor shall update all data on these QC requirements as work

progresses, and shall promptly provide this information to the Government via QCS.

1.6.4 Submittal Management

The Government will provide the initial submittal register, ENG Form 4288, SUBMITTAL REGISTER, in electronic format. Thereafter, the Contractor shall maintain a complete list of all submittals, including completion of all data columns. Dates on which submittals are received and returned by the Government will be included in its export file to the Contractor. The Contractor shall use QCS to track and transmit all submittals. ENG Form 4025, submittal transmittal form, and the submittal register update, ENG Form 4288, shall be produced using QCS. RMS will be used to update, store and exchange submittal registers and transmittals, but will not be used for storage of actual submittals.

1.6.5 Schedule

The Contractor shall develop a construction schedule consisting of pay activities, in accordance with Contract Clause "Schedules for Construction Contracts", or Section 01200, GENERAL REQUIREMENTS, as applicable. This schedule shall be input and maintained in the QCS database either manually or by using the Standard Data Exchange Format (SDEF) (see Section 01200, GENERAL REQUIREMENTS). The updated schedule data shall be included with each pay request submitted by the Contractor.

1.6.6 Import/Export of Data

QCS includes the ability to export Contractor data to the Government and to import submittal register and other Government-provided data, and schedule data using SDEF.

1.7 IMPLEMENTATION

Contractor use of QCS as described in the preceding paragraphs is mandatory. The Contractor shall ensure that sufficient resources are available to maintain its QCS database, and to provide the Government with regular database updates. QCS shall be an integral part of the Contractor's management of quality control.

1.8 DATA SUBMISSION VIA COMPUTER DISKETTE OR CD-ROM

The Government-preferred method for Contractor's submission of updates, payment requests, correspondence and other data is by E-mail with file attachment(s). For locations where this is not feasible, the Contracting Officer may permit use of computer diskettes or CD-ROM for data transfer. Data on the disks or CDs shall be exported using the QCS built-in export function. If used, diskettes and CD-ROMs will be submitted in accordance with the following:

1.8.1 File Medium

The Contractor shall submit required data on 3-1/2 inch double-sided high-density diskettes formatted to hold 1.44 MB of data, capable of

running under Microsoft Windows 95 or newer. Alternatively, CD-ROMs may be used. They shall conform to industry standards used in the United States. All data shall be provided in English.

1.8.2 Disk or CD-ROM Labels

The Contractor shall affix a permanent exterior label to each diskette and CD-ROM submitted. The label shall indicate in English, the QCS file name, full contract number, contract name, project location, data date, name and telephone number of person responsible for the data.

1.8.3 File Names

The Government will provide the file names to be used by the Contractor with the QCS software.

1.9 MONTHLY COORDINATION MEETING

The Contractor shall update the QCS database each workday. At least monthly, the Contractor shall generate and submit an export file to the Government with schedule update and progress payment request. As required in Contract Clause "Payments", at least one week prior to submittal, the Contractor shall meet with the Government representative to review the planned progress payment data submission for errors and omissions. The Contractor shall make all required corrections prior to Government acceptance of the export file and progress payment request. Payment requests accompanied by incomplete or incorrect data submittals will be returned. The Government will not process progress payments until an acceptable QCS export file is received.

1.10 NOTIFICATION OF NONCOMPLIANCE

The Contracting Officer will notify the Contractor of any detected noncompliance with the requirements of this specification. The Contractor shall take immediate corrective action after receipt of such notice. Such notice, when delivered to the Contractor at the work site, shall be deemed sufficient for the purpose of notification.

-- End of Section --

SECTION TABLE OF CONTENTS

DIVISION 01 - GENERAL REQUIREMENTS

SECTION 01330

SUBMITTAL PROCEDURES

PART 1 GENERAL

1.1 SUMMARY
1.1.1 Government-Furnished Information
1.2 DEFINITIONS
1.2.1 Submittal
1.2.2 Types of Submittals
1.3 SUBMITTAL IDENTIFICATION (SD)
1.3.1 Approving Authority
1.3.2 Work
1.4 SUBMITTALS
1.5 USE OF SUBMITTAL REGISTER DATABASE
1.5.1 Submittal Register
1.5.2 Contractor Use of Submittal Register
1.5.3 Approving Authority Use of Submittal Register
1.5.4 Contractor Action Code and Action Code
1.5.5 Copies Delivered to the Government
1.6 PROCEDURES FOR SUBMITTALS
1.6.1 Reviewing, Certifying, Approving Authority
1.6.2 Constraints
1.6.3 Scheduling
1.6.4 Variations
1.6.4.1 Considering Variations
1.6.4.2 Proposing Variations
1.6.4.3 Warranting That Variations Are Compatible
1.6.4.4 Review Schedule Is Modified
1.6.5 Contractor's Responsibilities
1.6.6 QC Organization Responsibilities
1.6.7 Government's Responsibilities
1.6.8 Actions Possible
1.7 FORMAT OF SUBMITTALS
1.7.1 Transmittal Form
1.7.2 Identifying Submittals
1.7.3 Format for Product Data
1.7.4 Format for Shop Drawings
1.7.5 Format of Samples
1.7.6 Format of Administrative Submittals
1.8 QUANTITY OF SUBMITTALS
1.8.1 Number of Copies of Product Data
1.8.2 Number of Copies of Shop Drawings
1.8.3 Number of Samples
1.8.4 Number of Copies of Administrative Submittals
1.9 FORWARDING SUBMITTALS
1.9.1 Samples Required of the Contractor
1.9.2 Shop Drawings, Product Data, and O&M Data

1.10 SUBMITTAL CLASSIFICATION
1.10.1 Government Approved
1.10.2 Information Only
1.11 APPROVED SUBMITTALS
1.12 DISAPPROVED SUBMITTALS
1.13 WITHHOLDING OF PAYMENT
1.14 GENERAL
1.15 SUBMITTAL REGISTER
1.16 SCHEDULING
1.17 TRANSMITTAL FORM (ENG FORM 4025)
1.18 SUBMITTAL PROCEDURES
1.18.1 Procedures
1.18.2 Deviations
1.19 CONTROL OF SUBMITTALS
1.20 GOVERNMENT APPROVED SUBMITTALS
1.21 INFORMATION ONLY SUBMITTALS
1.22 STAMPS

-- End of Section Table of Contents --

SECTION 01330

SUBMITTAL PROCEDURES

PART 1 GENERAL

1.1 SUMMARY

1.1.1 Government-Furnished Information

Submittal register database and submittal management program will be delivered to the contractor, by contracting officer on 3-1/2 inch disk. Register will have the following fields completed, to the extent that will be required by the Government during subsequent usage.

Column (c): Lists specification section in which submittal is required.

Column (d): Lists each submittal description (SD No. and type, e.g. SD-04 Drawings) required in each specification section.

Column (e): Lists one principal paragraph in specification section where a material or product is specified. This listing is only to facilitate locating submitted requirements. Do not consider entries in column (e) as limiting project requirements.

Column (f): Indicate approving authority for each submittal. A "G" indicates approval by contracting officer; a blank indicates approval by QC manager.

The database and submittal management program will be extractable from the disk furnished to contractor, for operation on contractor's IBM compatible personal computer with 640kb RAM, a hard drive, and 3-1/2 inch high density floppy disk drive.

1.2 DEFINITIONS

1.2.1 Submittal

Shop drawings, product data, samples, and administrative submittals presented for review and approval. Contract Clauses "FAR 52.236-5, Material and Workmanship," paragraph (b) and "FAR 52.236-21, Specifications and Drawings for Construction," paragraphs (d), (e), and (f) apply to all "submittals."

1.2.2 Types of Submittals

All submittals are classified as indicated in paragraph "Submittal Descriptions (SD)". Submittals also are grouped as follows:

a. Shop drawings: As used in this section, drawings, schedules,

diagrams, and other data prepared specifically for this contract, by contractor or through contractor by way of subcontractor, manufacturer, supplier, distributor, or other lower tier contractor, to illustrate portion of work.

b. Product data: Preprinted material such as illustrations, standard schedules, performance charts, instructions, brochures, diagrams, manufacturer's descriptive literature, catalog data, and other data to illustrate portion of work, but not prepared exclusively for this contract.

c. Samples: Physical examples of products, materials, equipment, assemblies, or workmanship that are physically identical to portion of work, illustrating portion of work or establishing standards for evaluating appearance of finished work or both.

d. Administrative submittals: Data presented for reviews and approval to ensure that administrative requirements of project are adequately met but not to ensure directly that work is in accordance with design concept and in compliance with contract documents.

1.3 SUBMITTAL IDENTIFICATION (SD)

Submittals required are identified by SD numbers and titles as follows:

SD-01 Preconstruction Submittals

Certificates of insurance.
Surety bonds.
List of proposed subcontractors.
Topographic Surveyor.
List of proposed products.
Construction Progress Schedule.
Submittal schedule.
Schedule of values.
Health and safety plan.
Work plan.
Quality control plan.
Environmental protection plan.

SD-02 Shop Drawings

Drawings, diagrams and schedules specifically prepared to illustrate some portion of the work.

Diagrams and instructions from a manufacturer or fabricator for use in producing the product and as aids to the contractor for integrating the product or system into the project.

Drawings prepared by or for the contractor to show how multiple systems and interdisciplinary work will be coordinated.

SD-03 Product Data

Catalog cuts, illustrations, schedules, diagrams, performance charts, instructions and brochures illustrating size, physical appearance and other characteristics of materials or equipment for some portion of the work.

Samples of warranty language when the contract requires extended product warranties.

Waybills and Delivery Tickets.

SD-04 Samples

Physical examples of materials, equipment or workmanship that illustrate functional and aesthetic characteristics of a material or product and establish standards by which the work can be judged.

Color samples from the manufacturer's standard line (or custom color samples if specified) to be used in selecting or approving colors for the project.

Field samples and mock-ups constructed on the project site establish standards by which the ensuring work can be judged. Includes assemblies or portions of assemblies which are to be incorporated into the project and those which will be removed at conclusion of the work.

SD-05 Design Data

Calculations, mix designs, analyses or other data pertaining to a part of work.

SD-06 Test Reports

Report signed by authorized official of testing laboratory that a material, product or system identical to the material, product or system to be provided has been tested in accord with specified requirements. (Testing must have been within three years of date of contract award for the project.)

Report which includes findings of a test required to be performed by the contractor on an actual portion of the work or prototype prepared for the project before shipment to job site.

Report which includes finding of a test made at the job site or on sample taken from the job site, on portion of work during or after installation.

Investigation reports

Daily checklists

Final acceptance test and operational test procedure

SD-07 Certificates

Statements signed by responsible officials of manufacturer of product, system or material attesting that product, system or material meets specification requirements. Must be dated after award of project contract and clearly name the project.

Document required of Contractor, or of a supplier, installer or subcontractor through Contractor, the purpose of which is to further quality of orderly progression of a portion of the work by documenting procedures, acceptability of methods or personnel qualifications.

Confined space entry permits.

SD-08 Manufacturer's Instructions

Preprinted material describing installation of a product, system or material, including special notices and Material Safety Data sheets concerning impedances, hazards and safety precautions.

SD-10 Operation and Maintenance Data

Data intended to be incorporated in operations and maintenance manuals.

SD-11 Closeout Submittals

Documentation to record compliance with technical or administrative requirements or to establish an administrative mechanism.

As-built drawings.

Special warranties.

Posted operating instructions.

Training plan.

1.3.1 Approving Authority

Person authorized to approve submittal.

1.3.2 Work

As used in this section, on- and off-site construction required by contract documents, including labor necessary to produce construction and materials, products, equipment, and systems incorporated or to be incorporated in such construction.

1.4 SUBMITTALS

Government approval is required for submittals with a "G" designation; submittals not having a "G" designation are for information only. When used, a designation following the "G" designation identifies the office that will review the submittal for the Government. The "RE" designates that the Resident Office will review the submittal for the Government.

Submit the following in accordance with the requirements of this section:

SD-01 Preconstruction Submittals

Submittal Register; G, RE.

1.5 USE OF SUBMITTAL REGISTER DATABASE

Prepare and maintain submittal register, as the work progresses. Use electronic submittal register program furnished by the Government or any other format. Do not change data which is output in columns (c), (d), (e), and (f) as delivered by government; retain data which is output in columns (a), (g), (h), and (i) as approved.

1.5.1 Submittal Register

Submit submittal register as an electronic database, using submittals management program furnished to contractor. Submit with quality control plan and project schedule required by Section 01451, CONTRACTOR QUALITY CONTROL and Section 01312, QUALITY CONTROL SYSTEM (QCS). Do not change data in columns (c), (d), (e), and (f) as delivered by the government. Verify that all submittals required for project are listed and add missing submittals. Complete the following on the register database:

Column (a) Activity Number: Activity number from the project schedule.

Column (g) Contractor Submit Date: Scheduled date for approving authority to receive submittals.

Column (h) Contractor Approval Date: Date contractor needs approval of submittal.

Column (i) Contractor Material: Date that contractor needs material delivered to contractor control.

1.5.2 Contractor Use of Submittal Register

Update the following fields in the government-furnished submittal register program or equivalent fields in program utilized by contractor.

Column (b) Transmittal Number: Contractor assigned list of consecutive numbers.

Column (j) Action Code (k): Date of action used to record contractor's review when forwarding submittals to QC.

Column (l) List date of submittal transmission.

Column (q) List date approval received.

1.5.3 Approving Authority Use of Submittal Register

Update the following fields in the government-furnished submittal register program or equivalent fields in program utilized by contractor.

Column (b).

Column (l) List date of submittal receipt.

Column (m) through (p).

Column (q) List date returned to contractor.

1.5.4 Contractor Action Code and Action Code

Entries used will be as follows (others may be prescribed by Transmittal Form):

NR - Not Received

AN - Approved as noted

A - Approved

RR - Disapproved, Revise, and Resubmit

1.5.5 Copies Delivered to the Government

Deliver one copy of submitted register updated by contractor to government with each invoice request. Deliver in electronic format, unless a paper copy is requested by contracting officer.

1.6 PROCEDURES FOR SUBMITTALS

1.6.1 Reviewing, Certifying, Approving Authority

QC organization shall be responsible for reviewing and certifying that submittals are in compliance with contract requirements. Approving authority on submittals is QC manager unless otherwise specified for specific submittal. At each "Submittal" paragraph in individual specification sections, a notation "G," following a submittal item, indicates contracting officer is approving authority for that submittal item.

1.6.2 Constraints

a. Submittals listed or specified in this contract shall conform to provisions of this section, unless explicitly stated otherwise.

b. Submittals shall be complete for each definable feature of work; components of definable feature interrelated as a system shall be submitted at same time.

c. When acceptability of a submittal is dependent on conditions, items, or materials included in separate subsequent submittals, submittal will be returned without review.

d. Approval of a separate material, product, or component does not

imply approval of assembly in which item functions.

1.6.3 Scheduling

a. Coordinate scheduling, sequencing, preparing and processing of submittals with performance of work so that work will not be delayed by submittal processing. Allow for potential requirements to resubmit.

b. Except as specified otherwise, allow review period, beginning with receipt by approving authority, that includes at least 15 working days for submittals for QC manager approval and 20 working days for submittals for contracting officer approval. Period of review for submittals with contracting officer approval begins when Government receives submittal from QC organization. Period of review for each resubmittal is the same as for initial submittal.

1.6.4 Variations

Variations from contract requirements require Government approval pursuant to contract Clause entitled "FAR 52.236-21, Specifications and Drawings for Construction" and will be considered where advantageous to government.

1.6.4.1 Considering Variations

Discussion with contracting officer prior to submission, will help ensure functional and quality requirements are met and minimize rejections and resubmittals. When contemplating a variation which results in lower cost, consider submission of the variation as a Value Engineering Change Proposal (VECP).

1.6.4.2 Proposing Variations

When proposing variation, deliver written request to the contracting officer, with documentation of the nature and features of the variation and why the variation is desirable and beneficial to government. If lower cost is a benefit, also include an estimate of the cost saving. In addition to documentation required for variation, include the submittals required for the item. Clearly mark the proposed variation in all documentation.

1.6.4.3 Warranting That Variations Are Compatible

When delivering a variation for approval, contractor warrants that this contract has been reviewed to establish that the variation, if incorporated, will be compatible with other elements of work.

1.6.4.4 Review Schedule Is Modified

In addition to normal submittal review period, a period of 10 working days will be allowed for consideration by the Government of submittals with variations.

1.6.5 Contractor's Responsibilities

a. Determine and verify field measurements, materials, field construction criteria; review each submittal; and check and coordinate each submittal with requirements of the work and contract documents.

b. Transmit submittals to QC organization in accordance with schedule on approved Submittal Register, and to prevent delays in the work, delays to government, or delays to separate contractors.

c. Advise contracting officer of variation, as required by paragraph entitled "Variations."

d. Correct and resubmit submittal as directed by approving authority. When resubmitting disapproved transmittals or transmittals noted for resubmittal, the contractor shall provide copy of that previously submitted transmittal including all reviewer comments for use by approving authority. Direct specific attention in writing or on resubmitted submittal, to revisions not requested by approving authority on previous submissions.

e. Furnish additional copies of submittal when requested by contracting officer, to a limit of 20 copies per submittal.

f. Complete work which must be accomplished as basis of a submittal in time to allow submittal to occur as scheduled.

g. Ensure no work has begun until submittals for that work have been returned as "approved," or "approved as noted", except to the extent that a portion of work must be accomplished as basis of submittal.

1.6.6 QC Organization Responsibilities

a. Note date on which submittal was received from contractor on each submittal.

b. Review each submittal; and check and coordinate each submittal with requirements of work and contract documents.

c. Review submittals for conformance with project design concepts and compliance with contract documents.

d. Act on submittals, determining appropriate action based on QC organization's review of submittal.

(1) When QC manager is approving authority, take appropriate action on submittal from the possible actions defined in paragraph entitled, "Actions Possible."

(2) When contracting officer is approving authority or when variation has been proposed, forward submittal to Government with certifying statement or return submittal marked "not reviewed" or "revise and resubmit" as appropriate. The QC organization's review of submittal determines appropriate action.

e. Ensure that material is clearly legible.

f. Stamp each sheet of each submittal with QC certifying statement or approving statement, except that data submitted in bound volume or on one sheet printed on two sides may be stamped on the front of the first sheet only.

(1) When approving authority is contracting officer, QC organization will certify submittals forwarded to contracting officer with the following certifying statement:

"I hereby certify that the (equipment) (material) (article) shown and marked in this submittal is that proposed to be incorporated with contract Number , is in compliance with the contract drawings and specification, can be installed in the allocated spaces, and is submitted for Government approval.

Certified by Submittal Reviewer _____, Date _____
(Signature when applicable)

Certified by QC manager _____, Date _____"
(Signature)

(2) When approving authority is QC manager, QC manager will use the following approval statement when returning submittals to contractor as "Approved" or "Approved as Noted."

"I hereby certify that the (material) (equipment) (article) shown and marked in this submittal and proposed to be incorporated with contract Number , is in compliance with the contract drawings and specification, can be installed in the allocated spaces, and is _____ approved for use.

Certified by Submittal Reviewer _____, Date _____
(Signature when applicable)

Approved by QC manager _____, Date _____"
(Signature)

g. Sign certifying statement or approval statement. The person signing certifying statements shall be QC organization member designated in the approved QC plan. The signatures shall be in original ink. Stamped signatures are not acceptable.

h. Update submittal register database as submittal actions occur and maintain the submittal register at project site until final acceptance of all work by contracting officer.

i. Retain a copy of approved submittals at project site, including contractor's copy of approved samples.

1.6.7 Government's Responsibilities

When approving authority is contracting Officer, the Government will:

a. Note date on which submittal was received from QC manager, on each submittal for which the contracting officer is approving authority.

b. Review submittals for approval within scheduling period specified and only for conformance with project design concepts and compliance with contract documents.

c. Identify returned submittals with one of the actions defined in paragraph entitled "Actions Possible" and with markings appropriate for action indicated.

1.6.8 Actions Possible

Submittals will be returned with one of the following notations:

a. Submittals marked "not reviewed" will indicate submittal has been previously reviewed and approved, is not required , does not have evidence of being reviewed and approved by contractor, or is not complete. A submittal marked "not reviewed" will be returned with an explanation of the reason it is not reviewed. Resubmit submittals returned for lack of review by contractor or for being incomplete, with appropriate action, coordination, or change.

b. Submittals marked "approved" "approved as submitted" authorize contractor to proceed with work covered.

c. Submittals marked "approved as noted" or "approval except as noted; resubmission not required" authorize contractor to proceed with work as noted provided contractor takes no exception to the notations.

d. Submittals marked "revise and resubmit" or "disapproved" indicate submittal is incomplete or does not comply with design concept or requirements of the contract documents and shall be resubmitted with appropriate changes. No work shall proceed for this item until resubmittal is approved.

1.7 FORMAT OF SUBMITTALS

1.7.1 Transmittal Form

Transmit each submittal, except sample installations and sample panels, to office of approving authority. Transmit submittals with transmittal form prescribed by contracting officer and standard for project. The transmittal form shall identify contractor, indicate date of submittal, and include information prescribed by transmittal form and required in paragraph entitled "Identifying Submittals." Process transmittal forms to record actions regarding sample panels and sample installations.

1.7.2 Identifying Submittals

Identify submittals, except sample panel and sample installation, with the

following information permanently adhered to or noted on each separate component of each submittal and noted on transmittal form. Mark each copy of each submittal identically, with the following:

a. Project title and location.

b. Construction contract number.

c. Section number of the specification section by which submittal is required.

d. Submittal description (SD) number of each component of submittal.

e. When a resubmission, add alphabetic suffix on submittal description, for example, SD-10A, to indicate resubmission.

f. Name, address, and telephone number of subcontractor, supplier, manufacturer and any other second tier contractor associated with submittal.

g. Product identification and location in project.

1.7.3 Format for Product Data

a. Present product data submittals for each section as a complete, bound volume. Include table of contents, listing page and catalog item numbers for product data.

b. Indicate, by prominent notation, each product which is being submitted; indicate specification section number and paragraph number to which it pertains.

c. Supplement product data with material prepared for project to satisfy submittal requirements for which product data does not exist. Identify this material as developed specifically for project.

1.7.4 Format for Shop Drawings

a. Shop drawings shall not be less than 8-1/2 by 11 inches nor more than 30 by 42 inches.

b. Present 8-1/2 by 11 inches sized shop drawings as part of the bound volume for submittals required by section. Present larger drawings in sets.

c. Include on each drawing the drawing title, number, date, and revision numbers and dates, in addition to information required in paragraph entitled "Identifying Submittals."

d. Dimension drawings, except diagrams and schematic drawings; prepare drawings demonstrating interface with other trades to scale. Shop drawing dimensions shall be the same unit of measure as indicated on the contract drawings. Identify materials and

products for work shown.

1.7.5 Format of Samples

a. Furnish samples in sizes below, unless otherwise specified or unless the manufacturer has prepackaged samples of approximately same size as specified:

(1) Sample of Equipment or Device: Full size.

(2) Sample of Materials Less Than 2 by 3 inches: Built up to 8-1/2 by 11 inches.

(3) Sample of Materials Exceeding 8-1/2 by 11 inches: Cut down to 8-1/2 by 11 inches and adequate to indicate color, texture, and material variations.

(4) Sample of Linear Devices or Materials: 10 inch length or length to be supplied, if less than 10 inches. Examples of linear devices or materials are conduit and handrails.

(5) Sample of Non-Solid Materials: One Pint. Examples of non-solid materials are sand and paint.

(6) Color Selection Samples: 2 by 4 inches.

(7) Sample Panel: 4 by 4 feet.

(8) Sample Installation: 100 square feet.

b. Samples Showing Range of Variation: Where variations are unavoidable due to nature of the materials, submit sets of samples of not less than three units showing extremes and middle of range.

c. Reusable Samples: Incorporate returned samples into work only if so specified or indicated. Incorporated samples shall be in undamaged condition at time of use.

d. Recording of Sample Installation: Note and preserve the notation of area constituting sample installation but remove notation at final clean up of project.

e. When color, texture or pattern is specified by naming a particular manufacturer and style, include one sample of that manufacturer and style, for comparison.

1.7.6 Format of Administrative Submittals

a. When submittal includes a document which is to be used in project or become part of project record, other than as a submittal, do not apply contractor's approval stamp to document, but to a separate sheet accompanying document.

1.8 QUANTITY OF SUBMITTALS

1.8.1 Number of Copies of Product Data

a. Submit six copies of submittals of product data requiring review and approval only by QC organization and seven copies of product data requiring review and approval by contracting officer.

1.8.2 Number of Copies of Shop Drawings

Submit shop drawings in compliance with quantity requirements specified for product data.

1.8.3 Number of Samples

a. Submit two samples, or two sets of samples showing range of variation, of each required item. One approved sample or set of samples will be retained by approving authority and one will be returned to contractor.

b. Submit one sample panel. Include components listed in technical section or as directed.

c. Submit one sample installation, where directed.

d. Submit one sample of non-solid materials.

1.8.4 Number of Copies of Administrative Submittals

a. Unless otherwise specified, submit administrative submittals compliance with quantity requirements specified for product data.

1.9 FORWARDING SUBMITTALS

1.9.1 Samples Required of the Contractor

Submit samples to Contracting Officer.

1.9.2 Shop Drawings, Product Data, and O&M Data

As soon as practicable after award of contract, and before procurement of fabrication, submit, except as specified otherwise, to the Contracting Officer the shop drawings, product data and O&M Data required in the technical sections of this specification. The Contracting Officer will review and provide surveillance as necessary to determine if submittals comply with the contract requirements.

1.10 SUBMITTAL CLASSIFICATION

Submittals are classified as follows:

1.10.1 Government Approved

Government approval is required for extensions of design, critical materials, deviations, equipment whose compatibility with the entire system

must be checked, and other items as designated by the Contracting Officer. Within the terms of the Contract Clause entitled "Specifications and Drawings for Construction," they are considered to be "shop drawings."

1.10.2 Information Only

All submittals not requiring Government approval will be for information only. They are not considered to be "shop drawings" within the terms of the Contract Clause referred to above.

1.11 APPROVED SUBMITTALS

The Contracting Officer's approval of submittals shall not be construed as a complete check, but will indicate only that the general method of construction, materials, detailing and other information are satisfactory. Approval will not relieve the Contractor of the responsibility for any error which may exist, as the Contractor under the Contractor Quality Control (CQC) requirements of this contract is responsible for dimensions, the design of adequate connections and details, and the satisfactory construction of all work. After submittals have been approved by the Contracting Officer, no resubmittal for the purpose of substituting materials or equipment will be considered unless accompanied by an explanation of why a substitution is necessary.

1.12 DISAPPROVED SUBMITTALS

The Contractor shall make all corrections required by the Contracting Officer and promptly furnish a corrected submittal in the form and number of copies specified for the initial submittal. If the Contractor considers any correction indicated on the submittals to constitute a change to the contract, a notice in accordance with the Contract Clause "Changes" shall be given promptly to the Contracting Officer.

1.13 WITHHOLDING OF PAYMENT

Payment for materials incorporated in the work will not be made if required approvals have not been obtained.

1.14 GENERAL

The Contractor shall make submittals as required by the specifications. The Contracting Officer may request submittals in addition to those specified when deemed necessary to adequately describe the work covered in the respective sections. Units of weights and measures used on all submittals shall be the same as those used in the contract drawings. Each submittal shall be complete and in sufficient detail to allow ready determination of compliance with contract requirements. Prior to submittal, all items shall be checked and approved by the Contractor's Quality Control (CQC) System Manager and each item shall be stamped, signed, and dated by the CQC System Manager indicating action taken. Proposed deviations from the contract requirements shall be clearly identified. Submittals shall include items such as: Contractor's, manufacturer's, or fabricator's drawings; descriptive literature including (but not limited to) catalog cuts, diagrams, operating charts or curves;

test reports; test cylinders; samples; O&M manuals (including parts list); certifications; warranties; and other such required submittals. Submittals requiring Government approval shall be scheduled and made prior to the acquisition of the material or equipment covered thereby. Samples remaining upon completion of the work shall be picked up and disposed of in accordance with manufacturer's Material Safety Data Sheets (MSDS) and in compliance with existing laws and regulations.

1.15 SUBMITTAL REGISTER

At the end of this section is a submittal register showing items of equipment and materials for which submittals are required by the specifications; this list may not be all inclusive and additional submittals may be required. The Contractor shall maintain a submittal register for the project.

1.16 SCHEDULING

Submittals covering component items forming a system or items that are interrelated shall be scheduled to be coordinated and submitted concurrently. Certifications to be submitted with the pertinent drawings shall be so scheduled. Adequate time (a minimum of 30 calendar days exclusive of mailing time) shall be allowed and shown on the register for review and approval. No delay damages or time extensions will be allowed for time lost in late submittals.

1.17 TRANSMITTAL FORM (ENG FORM 4025)

The sample transmittal form (ENG Form 4025) attached to this section shall be used for submitting both Government approved and information only submittals in accordance with the instructions on the reverse side of the form. These forms are included in the RMS-QC software that the Contractor is required to use for this contract. This form shall be properly completed by filling out all the heading blank spaces and identifying each item submitted. Special care shall be exercised to ensure proper listing of the specification paragraph and/or sheet number of the contract drawings pertinent to the data submitted for each item.

1.18 SUBMITTAL PROCEDURES

Submittals shall be made as follows:

1.18.1 Procedures

The Contractor shall complete ENG Form 4025, "Transmittal of Shop Drawings, Equipment Data, Material Samples, or Manufacturer's Certificate of Compliance" with each set of shop drawings, certificates, equipment data of samples submitted. A blank ENG Form 4025 will be furnished by the Contracting Officer on request. Six (6) copies of each submittal will be required.

1.18.2 Deviations

For submittals which include proposed deviations requested by the

Contractor, the column "variation" of ENG Form 4025 shall be checked. The Contractor shall set forth in writing the reason for any deviations and annotate such deviations on the submittal. The Government reserves the right to rescind inadvertent approval of submittals containing unnoted deviations.

1.19 CONTROL OF SUBMITTALS

The Contractor shall carefully control his procurement operations to ensure that each individual submittal is made on or before the Contractor scheduled submittal date shown on the approved "Submittal Register."

1.20 GOVERNMENT APPROVED SUBMITTALS

Upon completion of review of submittals requiring Government approval, the submittals will be identified as having received approval by being so stamped and dated. Four copies of the submittal will be retained by the Contracting Officer and two copies of the submittal will be returned to the Contractor.

1.21 INFORMATION ONLY SUBMITTALS

Normally submittals for information only will not be returned. Approval of the Contracting Officer is not required on information only submittals. The Government reserves the right to require the Contractor to resubmit any item found not to comply with the contract. This does not relieve the Contractor from the obligation to furnish material conforming to the plans and specifications; will not prevent the Contracting Officer from requiring removal and replacement of nonconforming material incorporated in the work; and does not relieve the Contractor of the requirement to furnish samples for testing by the Government laboratory or for check testing by the Government in those instances where the technical specifications so prescribe.

1.22 STAMPS

Stamps used by the Contractor on the submittal data to certify that the submittal meets contract requirements shall be similar to the following:

CONTRACTOR

(Firm Name)

_____ Approved

_____ Approved with corrections as noted on submittal data and/or attached sheets(s).

SIGNATURE: _____

TITLE: _____

DATE: _____

-- End of Section --

SUBMITTAL REGISTER

CONTRACT NO.

TITLE AND LOCATION
RIO SALADO PHOENIX

CONTRACTOR

ACTIVITY NO (a)	TRANSMITTAL NO (b)	SPEC SECT (c)	DESCRIPTION ITEM SUBMITTED (d)	PARAGRAPH # (e)	CLASSIFICATION (f)	GOVT OR A/E REVWR	CONTRACTOR: SCHEDULE DATES SUBMIT (g)	APPROVAL NEEDED BY (h)	MATERIAL NEEDED BY (i)	CONTRACTOR ACTION CODE (j)	DATE OF ACTION (k)	DATE FWD TO APPR AUTH/ DATE RCD FROM CONTR (l)	APPROVING AUTHORITY DATE FWD TO OTHER REVIEWER (m)	DATE RCD FROM OTH REVIEWER (n)	ACTION CODE (o)	DATE OF ACTION (p)	MAILED TO CONTR/ DATE RCD FRM APPR AUTH (q)	REMARKS (r)
		01200	SD-01 Preconstruction Submittals															
			Temporary Electrical Layout Plan	1.4.1	G	RE												
			Contractor's Work Area Plan	1.16.1	G	RE												
			SD-11 Closeout Submittals															
			Preliminary As-Built Drawings	3.9.4	G	RE												
			Final As-Built Drawings	3.9.4	G	RE												
		01270	SD-03 Product Data															
			Weight Certificates	1.3.11.2	G	RE												
		01330	SD-01 Preconstruction Submittals															
			Submittal Register	1.5.1	G	RE												
		01355	SD-01 Preconstruction Submittals															
			Environmental Protection Plan	1.7	G	RE												
			Health and Safety Plan	1.7.4	G	RE												
		01356	SD-01 Preconstruction Submittals															
			Storm Water Pollution Prevention	1.4	G	RE												
			Plan (SWPPP)															
			Notice of Intent (NOI)	1.4	G	RE												
			SD-03 Product Data															
			Product data for storm water															
			pollution prevention materials															
			SD-07 Certificates															
			Mill Certificate or Affidavit	2.1.3														
		02230	SD-03 Product Data															
			Herbicide for Treatment of Salt	3.6														
			Cedar															
		02300	SD-01 Preconstruction Submittals															

SUBMITTAL REGISTER

CONTRACT NO.

TITLE AND LOCATION
RIO SALADO PHOENIX

CONTRACTOR

ACTIVITY NO (a)	TRANSMITTAL NO (b)	SPEC SECT (c)	DESCRIPTION ITEM SUBMITTED (d)	PARAGRAPH # (e)	CLASSIFICATION (f)	CONTRACTOR: SCHEDULE DATES SUBMIT (g)	APPROVAL NEEDED BY (h)	MATERIAL NEEDED BY (i)	CONTRACTOR ACTION CODE (j)	DATE OF ACTION (k)	DATE FWD TO APPR AUTH/ DATE RCD FROM CONTR (l)	APPROVING AUTHORITY DATE FWD TO OTHER REVIEWER (m)	DATE RCD FROM OTH REVIEWER (n)	ACTION CODE (o)	DATE OF ACTION (p)	MAILED TO CONTR/ DATE RCD FRM APPR AUTH (q)	REMARKS (r)
		02300	Excavation Plan	3.1													
			SD-03 Product Data														
			Topsoil	2.12													
			SD-04 Samples														
			Delivered Topsoil	1.10.1.1													
			Soil Amendments	1.10.1.2													
			SD-06 Test Reports														
			Testing	3.14													
			Top Soil	2.12													
			SD-07 Certificates														
			Testing	3.14													
			Topsoil	2.12													
			pH Adjuster	2.13.1													
			Fertilizer	2.13.2													
		02316	SD-06 Test Reports														
			Field Density Tests	3.3.3													
			Testing of Backfill Materials	3.3.2													
		02371	SD-02 Shop Drawings														
			Shop Drawings	3.6.1	G RE												
			Design Calculations	3.6.1	G RE												
			SD-04 Samples														
			Double Twisted Wire Mesh	3.6.1													
			Gabions														
			Alternative Wire Fasteners	2.1.2													
			SD-06 Test Reports														

SUBMITTAL REGISTER

CONTRACT NO.

TITLE AND LOCATION
RIO SALADO PHOENIX

CONTRACTOR

ACTIVITY NO (a)	TRANSMITTAL NO (b)	SPEC SECT (c)	DESCRIPTION ITEM SUBMITTED (d)	PARAGRAPH # (e)	CLASSIFICATION (f)	GOVT OR A/E REVWR	CONTRACTOR: SCHEDULE DATES SUBMIT (g)	APPROVAL NEEDED BY (h)	MATERIAL NEEDED BY (i)	CONTRACTOR ACTION CODE (j)	DATE OF ACTION (k)	DATE FWD TO APPR AUTH/ DATE RCD FROM CONTR (l)	APPROVING AUTHORITY DATE FWD TO OTHER REVIEWER (m)	DATE RCD FROM OTH REVIEWER (n)	ACTION CODE (o)	DATE OF ACTION (p)	MAILED TO CONTR/ DATE RCD FRM APPR AUTH (q)	REMARKS (r)
		02371	Double Twisted Wire Mesh	3.6.1														
			Gabions															
			Alternative Wire Fasteners	2.1.2														
			SD-07 Certificates															
			Stone Fill	2.1.4														
			Filter Material	2.1.5														
		02373	SD-03 Product Data															
			Non-Woven Geotextile	2.1.1														
			Woven Geotextile	2.1.2														
			Manufacturing Quality Control	2.2														
			Sampling and Testing															
			SD-04 Samples															
			Quality Assurance Samples and	3.1														
			Tests															
			SD-07 Certificates															
			Non-Woven Geotextile	2.1.1														
			Woven Geotextile	2.1.2														
		02466	SD-02 Shop Drawings															
			Caissons	3.1	G	RE												
			SD-07 Certificates															
			Qualifications	1.3	G	RE												
		02510	SD-02 Shop Drawings															
			Pipe and Equipment	2.2														
			SD-03 Product Data															
			Assistance and Training	3.4														
			Delivery, Storage and Handling	1.6														

SUBMITTAL REGISTER

CONTRACT NO.

TITLE AND LOCATION
RIO SALADO PHOENIX

CONTRACTOR

ACTIVITY NO (a)	TRANSMITTAL NO (b)	SPEC SECT (c)	DESCRIPTION ITEM SUBMITTED (d)	PARAGRAPH # (e)	CLASSIFICATION (f)	GOVT OR A/E REVWR	CONTRACTOR: SCHEDULE DATES SUBMIT (g)	APPROVAL NEEDED BY (h)	MATERIAL NEEDED BY (i)	CONTRACTOR ACTION CODE (j)	DATE OF ACTION (k)	DATE FWD TO APPR AUTH/ DATE RCD FROM CONTR (l)	APPROVING AUTHORITY DATE FWD TO OTHER REVIEWER (m)	DATE RCD FROM OTH REVIEWER (n)	ACTION CODE (o)	DATE OF ACTION (p)	MAILED TO CONTR/ DATE RCD FRM APPR AUTH (q)	REMARKS (r)
		02510	SD-07 Certificates															
			Manufacturer's Certification	2.1														
		02630	SD-03 Product Data															
			Placing Pipe	3.3	G	RE												
			SD-04 Samples															
			Pipe for Culverts and Storm	2.1	G	RE												
			Drains															
			SD-07 Certificates															
			Frame and Cover for Gratings	2.3.5														
		02661	SD-03 Product Data															
			Geomembrane	1.6.1														
			SD-04 Samples															
			Field Seam Sampling	3.7.5														
			SD-07 Certificates															
			Geomembrane	1.6.1														
			Geomembrane Installer's	3.10														
			Certification of Subsurface															
			Acceptability															
			Manufacturer's Services	3.8														
		02722	SD-03 Product Data															
			Plant, Equipment, and Tools	1.6														
			SD-06 Test Reports															
			Sampling and testing	1.4														
			Field Density Tests	1.4.2.4														
		02741	SD-03 Product Data															
			Mix Design	2.3	G	RE												

SUBMITTAL REGISTER

CONTRACT NO.

TITLE AND LOCATION
RIO SALADO PHOENIX

CONTRACTOR

ACTIVITY NO (a)	TRANSMITTAL NO (b)	SPEC SECT (c)	DESCRIPTION ITEM SUBMITTED (d)	PARAGRAPH # (e)	CLASSIFICATION (f)	GOVT A/E REVWR	CONTRACTOR: SCHEDULE DATES SUBMIT (g)	APPROVAL NEEDED BY (h)	MATERIAL NEEDED BY (i)	CONTRACTOR ACTION CODE (j)	DATE OF ACTION (k)	DATE FWD TO APPR AUTH/ DATE RCD FROM CONTR (l)	APPROVING AUTHORITY DATE FWD TO OTHER REVIEWER (m)	DATE RCD FROM OTH REVIEWER (n)	ACTION CODE (o)	DATE OF ACTION (p)	MAILED TO CONTR/ DATE RCD FRM APPR AUTH (q)	REMARKS (r)
		02741	Contractor Quality Control	3.10	G RE													
			Material Acceptance and Percent	3.11	G RE													
			Payment															
			SD-04 Samples															
			Asphalt Cement Binder	2.2														
			Aggregates	2.1														
			SD-06 Test Reports															
			Aggregates	2.1	G RE													
			QC Monitoring	3.10.3.10														
			SD-07 Certificates															
			Asphalt Cement Binder	2.2	G RE													
			Testing Laboratory	3.6														
		02821	SD-07 Certificates															
			Chain Link Fence	2.1.1														
		03101	SD-02 Shop Drawings															
			Shop Drawings	1.4	G RE													
			SD-03 Product Data															
			Materials	2.1	G RE													
			SD-06 Test Reports															
			Inspection	3.3	G RE													
			Formwork Not Supporting Weight	3.2.1	G RE													
			of Concrete															
		03150	SD-03 Product Data															
			Preformed Expansion Joint Filler	2.2														
			Sealant	2.4														
			SD-07 Certificates															

SUBMITTAL REGISTER

CONTRACT NO.

TITLE AND LOCATION
RIO SALADO PHOENIX

CONTRACTOR

ACTIVITY NO (a)	TRANSMITTAL NO (b)	SPEC SECT (c)	DESCRIPTION ITEM SUBMITTED (d)	PARAGRAPH # (e)	CLASSIFICATION (f)	GOVT OR A/E REVWR	CONTRACTOR: SCHEDULE DATES SUBMIT (g)	APPROVAL NEEDED BY (h)	MATERIAL NEEDED BY (i)	CONTRACTOR ACTION CODE (j)	DATE OF ACTION (k)	DATE FWD TO APPR AUTH/ DATE RCD FROM CONTR (l)	APPROVING AUTHORITY DATE FWD TO OTHER REVIEWER (m)	DATE RCD FROM OTH REVIEWER (n)	ACTION CODE (o)	DATE OF ACTION (p)	MAILED TO CONTR/ DATE RCD FRM APPR AUTH (q)	REMARKS (r)
		03150	Preformed Expansion Joint Filler	2.2														
			Sealant	2.4														
			Water Stop	2.3														
		03200	SD-02 Shop Drawings															
			Reinforcement	3.1	G	RE												
			SD-03 Product Data															
			Welding	3.1.2	G	RE												
			SD-07 Certificates															
			Reinforcing Steel	2.1	G	RE												
		03307	SD-03 Product Data															
			Air-Entraining Admixture	2.1.3.1	G	RE												
			Water-Reducing or Retarding Admixture	2.1.3.2	G	RE												
			Curing Materials	2.1.8	G	RE												
			Reinforcing Steel	2.1.5	G	RE												
			Joint Sealants - Field Molded Sealants	2.1.7	G	RE												
			Water Stops	2.1.8.2	G	RE												
			Precast Wetwells	2.1.11	G	RE												
			Conveying and Placing Concrete	3.2	G	RE												
			SD-06 Test Reports															
			Aggregates	2.1.2														
			Concrete Mixture Proportions	1.3.4	G	RE												
			SD-07 Certificates															
			Cementitious Materials	2.1.1														
			Aggregates	2.1.2														

SUBMITTAL REGISTER

CONTRACT NO.

TITLE AND LOCATION
RIO SALADO PHOENIX

CONTRACTOR

ACTIVITY NO (a)	TRANSMITTAL NO (b)	SPEC SECT (c)	DESCRIPTION ITEM SUBMITTED (d)	PARAGRAPH # (e)	CLASSIFICATION (f)	GOVT OR A/E REVWR	CONTRACTOR: SCHEDULE DATES SUBMIT (g)	APPROVAL NEEDED BY (h)	MATERIAL NEEDED BY (i)	CONTRACTOR ACTION CODE (j)	DATE OF ACTION (k)	DATE FWD TO APPR AUTH/ DATE RCD FROM CONTR (l)	APPROVING AUTHORITY DATE FWD TO OTHER REVIEWER (m)	DATE RCD FROM OTH REVIEWER (n)	ACTION CODE (o)	DATE OF ACTION (p)	MAILED TO CONTR/ DATE RCD FRM APPR AUTH (q)	REMARKS (r)
		03371	SD-06 Test Reports															
			Mixture Proportions	1.4	G	RE												
			Aggregates	2.1.2	G	RE												
			Accelerator Compatibility	2.1.4.1	G	RE												
			Preconstruction Test Panels	1.7	G	RE												
			SD-07 Certificates															
			Portland Cement	2.1.1.1	G	RE												
			Pozzolans	2.1.1.3	G	RE												
			Silica Fume	2.1.1.4	G	RE												
			Accelerating Admixtures	2.1.4.1	G	RE												
			Curing Materials	2.1.5	G	RE												
			Qualifications	1.6	G	RE												
			Reinforcement	2.1.6	G	RE												
		03410	SD-02 Shop Drawings															
			Precast Wetwell Sections	1.4.1	G	RE												
			Precast Wetwell Sections	1.7.1	G	RE												
			SD-05 Design Data															
			Wetwell Design Calculations	1.7.2	G	RE												
			Concrete mix design	1.7.3														
			SD-06 Test Reports															
			Contractor-furnished mix design	2.3														
			SD-07 Certificates															
			Fabrication	2.5														
			SD-11 Closeout Submittals															
			Batch Tickets	1.7.4														
		03600	SD-02 Shop Drawings															

SUBMITTAL REGISTER

CONTRACT NO.

TITLE AND LOCATION
RIO SALADO PHOENIX

CONTRACTOR

ACTIVITY NO (a)	TRANSMITTAL NO (b)	SPEC SECT (c)	DESCRIPTION ITEM SUBMITTED (d)	PARAGRAPH # (e)	CLASSIFICATION (f)	GOVT OR A/E REVWR	CONTRACTOR: SCHEDULE DATES SUBMIT (g)	APPROVAL NEEDED BY (h)	MATERIAL NEEDED BY (i)	CONTRACTOR ACTION CODE (j)	DATE OF ACTION (k)	DATE FWD TO APPR AUTH/ DATE RCD FROM CONTR (l)	APPROVING AUTHORITY DATE FWD TO OTHER REVIEWER (m)	DATE RCD FROM OTH REVIEWER (n)	ACTION CODE (o)	DATE OF ACTION (p)	MAILED TO CONTR/ DATE RCD FRM APPR AUTH (q)	REMARKS (r)
		03600	Manufacturer's Product Data	3.1.1	G	RE												
			Method for Curing Grout	3.3.2	G	RE												
			SD-08 Manufacturer’s Instructions															
			Manufacturer's Training Schedule	3.3.2														
			Certificate of Compliance	3.3.2														
			Nonshrink Grout Manufacturer's Representative	1.3														
			SD-06 Test Reports															
			24-hour Evaluation of Nonshrink Grout Test Form	3.4														
			Demonstration Test Report	3.3.2														
			Field and Laboratory Testing and Report	3.2														
		04200	SD-02 Shop Drawings															
			Masonry Work	3.2	G	RE												
			SD-03 Product Data															
			Prefaced Concrete Masonry Units	2.3	G	RE												
			SD-04 Samples															
			Concrete Masonry Units (CMU)	2.2	G	RE												
			Prefaced Concrete Masonry Units	2.3	G	RE												
			Expansion-Joint Material	2.8	G	RE												
			Joint Reinforcement	2.6	G	RE												
			SD-06 Test Reports															
			Field Testing of Grout	3.14.1	G	RE												
			Special Inspection	1.4	G	RE												
			SD-07 Certificates															

SUBMITTAL REGISTER

CONTRACT NO.

TITLE AND LOCATION
RIO SALADO PHOENIX

CONTRACTOR

ACTIVITY NO (a)	TRANSMITTAL NO (b)	SPEC SECT (c)	DESCRIPTION ITEM SUBMITTED (d)	PARAGRAPH # (e)	CLASSIFICATION (f)	GOVT OR A/E REVWR	CONTRACTOR: SCHEDULE DATES SUBMIT (g)	APPROVAL NEEDED BY (h)	MATERIAL NEEDED BY (i)	CONTRACTOR ACTION CODE (j)	DATE OF ACTION (k)	DATE FWD TO APPR AUTH/ DATE RCD FROM CONTR (l)	APPROVING AUTHORITY DATE FWD TO OTHER REVIEWER (m)	DATE RCD FROM OTH REVIEWER (n)	ACTION CODE (o)	DATE OF ACTION (p)	MAILED TO CONTR/ DATE RCD FRM APPR AUTH (q)	REMARKS (r)
		04200	Concrete Masonry Units (CMU)	2.2	G RE													
			Prefaced Concrete Masonry Units	2.3	G RE													
			Reinforcing Steel Bars and Rods	2.7	G RE													
			Masonry Cement	3.4	G RE													
			Grout Admixtures	3.7	G RE													
		05120	SD-02 Shop Drawings															
			Structural Steel System	3.2	G RE													
			Structural Connections	3.2.1	G RE													
			SD-03 Product Data															
			Erection	3.2	G RE													
			Welding	3.3	G RE													
			SD-04 Samples															
			Carbon Steel Bolts and Nuts	2.5	G RE													
			Nuts Dimensional Style	2.6	G RE													
			Washers	2.7														
			SD-07 Certificates															
			Mill Test Reports	2.1	G RE													
			Welder Qualifications	3.3	G RE													
			Welding Inspector	1.5	G RE													
			Fabrication	3.1	G RE													
		05500	SD-02 Shop Drawings															
			Miscellaneous Metal Items	1.7	G RE													
			SD-04 Samples															
			Miscellaneous Metal Items	1.7	G RE													
		07920	SD-03 Product Data															
			Sealants	2.1														

SUBMITTAL REGISTER

CONTRACT NO.

TITLE AND LOCATION
RIO SALADO PHOENIX

CONTRACTOR

ACTIVITY NO (a)	TRANSMITTAL NO (b)	SPEC SECT (c)	DESCRIPTION ITEM SUBMITTED (d)	PARAGRAPH # (e)	CLASSIFICATION (f)	GOVT OR A/E REVWR	CONTRACTOR: SCHEDULE DATES SUBMIT (g)	APPROVAL NEEDED BY (h)	MATERIAL NEEDED BY (i)	CONTRACTOR ACTION CODE (j)	DATE OF ACTION (k)	DATE FWD TO APPR AUTH/ DATE RCD FROM CONTR (l)	APPROVING AUTHORITY DATE FWD TO OTHER REVIEWER (m)	DATE RCD FROM OTH REVIEWER (n)	ACTION CODE (o)	DATE OF ACTION (p)	MAILED TO CONTR/ DATE RCD FRM APPR AUTH (q)	REMARKS (r)
		07920	Primers	2.2														
			Bond breakers	2.3														
			Backstops	2.4														
		09900	SD-02 Shop Drawings															
			Piping identification	2.1														
			color	1.4														
			SD-03 Product Data															
			Coating	2.1	G	RE												
			Manufacturer's Technical Data	2.1														
			Sheets															
			SD-04 Samples															
			Color	1.4	G	RE												
			SD-07 Certificates															
			Applicator's qualifications	3.5.1														
			Qualification For Testing	3.8	G	RE												
			SD-08 Manufacturer’s Instructions															
			Application instructions	3.5.1														
			Mixing	3.5.2														
			Manufacturer's Material Safety	1.5.2														
			Data Sheets															
			SD-10 Operation and Maintenance															
			Data															
			Coatings:	2.1	G	RE												
		09915	SD-04 Samples															
			Color Schedule	2.2	G	RE												
		09971	SD-06 Test Reports															

SUBMITTAL REGISTER

CONTRACT NO.

TITLE AND LOCATION
RIO SALADO PHOENIX

CONTRACTOR

ACTIVITY NO (a)	TRANSMITTAL NO (b)	SPEC SECT (c)	DESCRIPTION ITEM SUBMITTED (d)	PARAGRAPH # (e)	CLASSIFICATION (f)	GOVT OR A/E REVWR	CONTRACTOR: SCHEDULE DATES SUBMIT (g)	APPROVAL NEEDED BY (h)	MATERIAL NEEDED BY (i)	CONTRACTOR ACTION CODE (j)	DATE OF ACTION (k)	DATE FWD TO APPR AUTH/ DATE RCD FROM CONTR (l)	APPROVING AUTHORITY DATE FWD TO OTHER REVIEWER (m)	DATE RCD FROM OTH REVIEWER (n)	ACTION CODE (o)	DATE OF ACTION (p)	MAILED TO CONTR/ DATE RCD FRM APPR AUTH (q)	REMARKS (r)
		09971	Coatings Qualification Test Reports	1.4.2.1	G	RE												
			Coating Sample Test Reports	3.1.3	G	RE												
			Abrasive Sample Test Reports	3.1.4	G	RE												
			Daily Inspection Reports	3.6.2.2	G	RE												
			Recycled Metallic Abrasive Field Test Reports (Daily and Weekly)	1.4.2.2	G	RE												
			SD-07 Certificates															
			Work Plan	1.4.3.1	G	RE												
			Qualifications of Certified Industrial Hygienist (CIH)	1.4.3.2	G	RE												
			Qualifications of Testing Laboratory for Coatings	1.4.3.3	G	RE												
			Qualifications of Testing Laboratory for Abrasive	1.4.3.4	G	RE												
			Qualifications of Coating Contractors	1.4.3.5	G	RE												
			Qualifications of Coating Manufacturer's Representative	1.4.3.6	G	RE												
			Coating Materials	1.4.3.7	G	RE												
			Coating System Component Compatibility	1.4.3.8	G	RE												
			Non-metallic Abrasive	1.4.3.9	G	RE												
			Metallic Abrasive	1.4.3.10	G	RE												
			SD-08 Manufacturer’s Instructions															
			Joint Sealant	3.5.2.5	G	RE												

SUBMITTAL REGISTER

CONTRACT NO.

TITLE AND LOCATION
RIO SALADO PHOENIX

CONTRACTOR

ACTIVITY NO (a)	TRANSMITTAL NO (b)	SPEC SECT (c)	DESCRIPTION ITEM SUBMITTED (d)	PARAGRAPH # (e)	CLASSIFICATION (f)	GOVT OR A/E REVWR	CONTRACTOR: SCHEDULE DATES SUBMIT (g)	APPROVAL NEEDED BY (h)	MATERIAL NEEDED BY (i)	CONTRACTOR ACTION CODE (j)	DATE OF ACTION (k)	DATE FWD TO APPR AUTH/ DATE RCD FROM CONTR (l)	APPROVING AUTHORITY DATE FWD TO OTHER REVIEWER (m)	DATE RCD FROM OTH REVIEWER (n)	ACTION CODE (o)	DATE OF ACTION (p)	MAILED TO CONTR/ DATE RCD FRM APPR AUTH (q)	REMARKS (r)
		09971	Coating System Instructions	1.4.4.1	G	RE												
			SD-11 Closeout Submittals															
			Disposal of Used Abrasive	3.4.5	G	RE												
			Inspection Logbook	3.6.2.3	G	RE												
		11212	SD-02 Shop Drawings															
			Adjustable Frequency Drives	2.8	G	RE												
			Installation	3.1														
			SD-03 Product Data															
			Water Distribution Pumps	2.3	G	RE												
			SD-06 Test Reports															
			Factory Test Report	2.8.6	G	RE												
			Field Test Report	2.8.7	G	RE												
			SD-08 Manufacturer’s Instructions															
			Manufacturer's Written Instructions	3.1.1														
			SD-10 Operation and Maintenance Data															
			Vertical Turbine and Submersible Pumping Units	2.1.1														
		13121	SD-02 Shop Drawings															
			Structural Steel for Pre-Fabricated Bridges	1.8.1														
			bearing anchor bolts	1.2.3														
			SD-03 Product Data															
			Pre-Fabricated steel bridge materials	2.1														

SUBMITTAL REGISTER

CONTRACT NO.

TITLE AND LOCATION
RIO SALADO PHOENIX

CONTRACTOR

ACTIVITY NO (a)	TRANSMITTAL NO (b)	SPEC SECT (c)	DESCRIPTION ITEM SUBMITTED (d)	PARAGRAPH # (e)	CLASSIFICATION (f)	GOVT OR A/E REVWR	CONTRACTOR: SCHEDULE DATES SUBMIT (g)	APPROVAL NEEDED BY (h)	MATERIAL NEEDED BY (i)	CONTRACTOR ACTION CODE (j)	DATE OF ACTION (k)	DATE FWD TO APPR AUTH/ DATE RCD FROM CONTR (l)	APPROVING AUTHORITY DATE FWD TO OTHER REVIEWER (m)	DATE RCD FROM OTH REVIEWER (n)	ACTION CODE (o)	DATE OF ACTION (p)	MAILED TO CONTR/ DATE RCD FRM APPR AUTH (q)	REMARKS (r)
		13121	SD-05 Design Data															
			Pre-Fabricated Steel Bridges	1.8.2	G RE													
			Pre-Fabricated Steel Bridges	2.1	G RE													
			Bridge end reactions	1.2.3	G													
			Bearing Anchor bolts	1.2.3	G RE													
			Deck beams and bracing	1.2.2	G RE													
			SD-07 Certificates															
			Pre-Fabricated steel bridge	2.1														
			materials															
		13405	SD-02 Shop Drawings															
			Installation	3.1.1	G RE													
			Wiring	3.1.1	G RE													
			Radio Link Design	2.3.2	G RE													
			SD-03 Product Data															
			Instrumentation and Control	3.8	G RE													
			System															
			Meters and Sensors	2.2	G RE													
			Training Manual	3.9	G RE													
			Performance Verification Test	3.6.2	G RE													
			(PVT)															
			Factory Test Procedure	2.9.2	G RE													
			Ladder logic programming	3.4	G RE													
			SCADA software programming	3.4	G RE													
			SCADA reports	3.4	G RE													
			SD-06 Test Reports															
			Factory Test Report	2.9.3	G RE													

SUBMITTAL REGISTER

CONTRACT NO.

TITLE AND LOCATION
RIO SALADO PHOENIX

CONTRACTOR

ACTIVITY NO (a)	TRANSMITTAL NO (b)	SPEC SECT (c)	DESCRIPTION ITEM SUBMITTED (d)	PARAGRAPH # (e)	CLASSIFICATION (f)	GOVT OR A/E REVWR	CONTRACTOR: SCHEDULE DATES SUBMIT (g)	APPROVAL NEEDED BY (h)	MATERIAL NEEDED BY (i)	CONTRACTOR ACTION CODE (j)	DATE OF ACTION (k)	DATE FWD TO APPR AUTH/ DATE RCD FROM CONTR (l)	APPROVING AUTHORITY DATE FWD TO OTHER REVIEWER (m)	DATE RCD FROM OTH REVIEWER (n)	ACTION CODE (o)	DATE OF ACTION (p)	MAILED TO CONTR/ DATE RCD FRM APPR AUTH (q)	REMARKS (r)
		13405	Testing, Adjusting and Commissioning	3.6.1	G	RE												
			Performance Verification Test(PVT)	3.6.2	G	RE												
			Endurance Test	3.6.3	G	RE												
			Radio Survey	2.3.3	G													
			SD-07 Certificates															
			Sensor and Control Wiring	3.3.1.2	G	RE												
			Testing of Ground Rods	3.6.1	G	RE												
			SD-10 Operation and Maintenance Data															
			Instrumentation and Control System	3.8	G	RE												
		15060	SD-02 Shop Drawings															
			Piping Support System	1.5.2	G	RE												
			SD-10 Operation and Maintenance Data															
			Piping Support System	1.5.2	G	RE												
		15955	SD-06 Test Reports															
			Testing Plan	3.1	G	RE												
			SD-07 Certificates															
			Testing equipment	3.1	G	RE												
			Certified Test Report	3.4.1	G	RE												
		16050	SD-02 Shop Drawings															
			Outlet and Device boxes	2.2	G	RE												
			Junction and Pull Boxes	2.3	G	RE												

SUBMITTAL REGISTER

CONTRACT NO.

TITLE AND LOCATION
RIO SALADO PHOENIX

CONTRACTOR

ACTIVITY NO (a)	TRANSMITTAL NO (b)	SPEC SECT (c)	DESCRIPTION ITEM SUBMITTED (d)	PARAGRAPH # (e)	CLASSIFICATION (f)	GOVT OR A/E REVWR	CONTRACTOR: SCHEDULE DATES SUBMIT (g)	APPROVAL NEEDED BY (h)	MATERIAL NEEDED BY (i)	CONTRACTOR ACTION CODE (j)	DATE OF ACTION (k)	DATE FWD TO APPR AUTH/ DATE RCD FROM CONTR (l)	APPROVING AUTHORITY DATE FWD TO OTHER REVIEWER (m)	DATE RCD FROM OTH REVIEWER (n)	ACTION CODE (o)	DATE OF ACTION (p)	MAILED TO CONTR/ DATE RCD FRM APPR AUTH (q)	REMARKS (r)
		16050	Terminal Junction Box	2.13	G	RE												
			Lighting and Power Distribution	2.6	G	RE												
			Panel Board															
			Mini-Power Center (MPC)	2.7	G	RE												
			Circuit Breaker, Individual	2.9	G	RE												
			Wiring Devices	2.4	G	RE												
			Magnetic Control Relay	2.15	G	RE												
			Dry Type Transformer	2.17	G	RE												
		16110	SD-02 Shop Drawings															
			PVC-Coated Rigid galvanized	2.1.1	G	RE												
			steel conduit															
			PVC Schedule 40 conduit	2.1.2	G	RE												
			Flexible metal, liquid-tight conduit	2.1.3	G	RE												
			Fittings	2.2	G	RE												
			Precast Handholes	2.3	G	RE												
		16120	SD-02 Shop Drawings															
			Conductors 600 Volts and Below	2.1	G	RE												
			600-Volt Rated Cable	2.2	G	RE												
			Grounding Conductors	2.3	G	RE												
			Accessories for Conductors 600	2.4	G	RE												
			Volts and Below															
		16425	SD-02 Shop Drawings															
			Products	Part 2	G	RE												
			SD-08 Manufacturer’s Instructions															
			Manufacturer's installation	2.11	G	RE												
			instructions															

SUBMITTAL REGISTER

CONTRACT NO.

TITLE AND LOCATION
RIO SALADO PHOENIX

CONTRACTOR

ACTIVITY NO (a)	TRANSMITTAL NO (b)	SPEC SECT (c)	DESCRIPTION ITEM SUBMITTED (d)	PARAGRAPH # (e)	CLASSIFICATION (f)	GOVT OR A/E REVWR	CONTRACTOR: SCHEDULE DATES SUBMIT (g)	APPROVAL NEEDED BY (h)	MATERIAL NEEDED BY (i)	CONTRACTOR ACTION CODE (j)	DATE OF ACTION (k)	DATE FWD TO APPR AUTH/ DATE RCD FROM CONTR (l)	APPROVING AUTHORITY DATE FWD TO OTHER REVIEWER (m)	DATE RCD FROM OTH REVIEWER (n)	ACTION CODE (o)	DATE OF ACTION (p)	MAILED TO CONTR/ DATE RCD FRM APPR AUTH (q)	REMARKS (r)
		16425	SD-06 Test Reports															
			Certified Factory Test Report	2.12	G	RE												
			SD-10 Operation and Maintenance															
			Data															
			Operation and Maintenance	2.11	G	RE												
			Manual															
			SD-07 Certificates															
			Manufacturer's Certification of	3.3	G	RE												
			Proper Installation															
		16450	SD-03 Product Data															
			Exothermic weld connectors	2.3.1	G	RE												
			Mechanical connectors	2.3.3	G	RE												
			Ground rods	2.1	G	RE												
			Compression connectors	2.3.2	G	RE												
		16520	SD-02 Shop Drawings															
			Luminaire drawings	1.4.1.1	G	RE												
			Poles	1.4.1.2	G	RE												
			SD-03 Product Data															
			Luminaires	2.1	G	RE												
			Lamps	2.1.1	G	RE												
			Ballasts	2.1.2	G	RE												
			Steel poles	2.2.1	G	RE												
			Brackets	2.3														
			SD-04 Samples															
			Luminaires	2.1	G	RE												
			SD-06 Test Reports															

SUBMITTAL REGISTER

CONTRACT NO.

TITLE AND LOCATION
RIO SALADO PHOENIX

CONTRACTOR

ACTIVITY NO (a)	TRANSMITTAL NO (b)	SPEC SECT (c)	DESCRIPTION ITEM SUBMITTED (d)	PARAGRAPH # (e)	CLASSIFICATION (f)	GOVT OR A/E REVWR	CONTRACTOR: SCHEDULE DATES SUBMIT (g)	APPROVAL NEEDED BY (h)	MATERIAL NEEDED BY (i)	CONTRACTOR ACTION CODE (j)	DATE OF ACTION (k)	DATE FWD TO APPR AUTH/ DATE RCD FROM CONTR (l)	APPROVING AUTHORITY DATE FWD TO OTHER REVIEWER (m)	DATE RCD FROM OTH REVIEWER (n)	ACTION CODE (o)	DATE OF ACTION (p)	MAILED TO CONTR/ DATE RCD FRM APPR AUTH (q)	REMARKS (r)
		16520	Test Data for luminaires	1.4.2	G	RE												
			Operating test	3.3														
		16950	SD-01 Preconstruction Submittals															
			Schedule for performing inspection and tests	1.4.1	G	RE												
			List of references to be used for each test	1.4.1	G	RE												
			Sample copy of equipment and materials inspection form(s)	1.4.1	G	RE												
			Sample copy of individual device test form	1.4.1	G	RE												
			Sample copy of individual system test form	1.4.1	G	RE												
			SD-06 Test Reports															
			Test or inspection reports for each electrical item tested	1.4.2	G	RE												
			SD-07 Certificates															
			Certificates for each electrical item tested	1.4.3	G	RE												
			SD-10 Operation and Maintenance Data															
			Operation and Maintenance Manual	1.4.4	G	RE												

TRANSMITTAL OF SHOP DRAWINGS, EQUIPMENT DATA, MATERIAL SAMPLES, OR MANUFACTURER'S CERTIFICATES OF COMPLIANCE *(Read instructions on the reverse side prior to initiating this form)*	DATE	TRANSMITTAL NO.

SECTION I - REQUEST FOR APPROVAL OF THE FOLLOWING ITEMS *(This section will be initiated by the contractor)*

TO:	FROM:	CONTRACT NO.	CHECK ONE: ☐ THIS IS A NEW TRANSMITTAL ☐ THIS IS A RESUBMITTAL OF TRANSMITTAL _____
SPECIFICATION SEC. NO. *(Cover only one section with each transmittal)*	PROJECT TITLE AND LOCATION		CHECK ONE: THIS TRANSMITTAL IS FOR ☐ FIO ☐ GOV'T. APPROVAL

ITEM NO. *a.*	DESCRIPTION OF ITEM SUBMITTED *(Type size, model number/etc.)*	MFG OR CONTR. CAT., CURVE DRAWING OR BROCHURE NO. *(See Instruction no. 8)* *c.*	NO. OF COPIES *d.*	CONTRACT REFERENCE DOCUMENT		FOR CONTRACTOR USE CODE *g.*	VARIATION *(See Instruction No. 6)* *h.*	FOR CE USE CODE *i.*
				SPEC. PARA. NO. *e.*	DRAWING SHEET NO. *f.*			

REMARKS

I certify that the above submitted items have been reviewed in detail and are correct and in strict conformance with the contract drawings and specifications except as other wise stated.

_____

NAME AND SIGNATURE OF CONTRACTOR

SECTION II - APPROVAL ACTION

ENCLOSURES RETURNED *(List by Item No.)*	NAME, TITLE AND SIGNATURE OF APPROVING AUTHORITY	DATE

INSTRUCTIONS

1. Section I will be initiated by the Contractor in the required number of copies.

2. Each transmittal shall be numbered consecutively in the space provided for "Transmittal No.". This number, in addition to the contract number, will form a serial number for identifying each submittal. For new submittals or resubmittals mark the appropriate box; on resubmittals, insert transmittal number of last submission as well as the new submittal number.

3. The "Item No." will be the same "Item No." as indicated on ENG FORM 4288-R for each entry on this form.

4. Submittals requiring expeditious handling will be submitted on a separate form.

5. Separate transmittal form will be used for submittals under separate sections of the specifications.

6. A check shall be placed in the "Variation" column when a submittal is not in accordance with the plans and specifications--also, a written statement to that effect shall be included in the space provided for "Remarks".

7. Form is self-transmittal, letter of transmittal is not required.

8. When a sample of material or Manufacturer's Certificate of Compliance is transmitted, indicate "Sample" or "Certificate" in column c, Section I.

9. U.S. Army Corps of Engineers approving authority will assign action codes as indicated below in space provided in Section I, column i to each item submitted. In addition they will ensure enclosures are indicated and attached to the form prior to return to the contractor. The Contractor will assign action codes as indicated below in Section I, column g, to each item submitted.

THE FOLLOWING ACTION CODES ARE GIVEN TO ITEMS SUBMITTED

A -- Approved as submitted.

B -- Approved, except as noted on drawings.

C -- Approved, except as noted on drawings. Refer to attached sheet resubmission required.

D -- Will be returned by separate correspondence.

E -- Disapproved (See attached).

F -- Receipt acknowledged.

FX -- Receipt acknowledged, does not comply as noted with contract requirements.

G -- Other *(Specify)*

10. Approval of items does not relieve the contractor from complying with all the requirements of the contract plans and specifications.

(Reverse of ENG Form 4025-R)

SECTION TABLE OF CONTENTS

DIVISION 01 - GENERAL REQUIREMENTS

SECTION 01355

ENVIRONMENTAL PROTECTION

PART 1 GENERAL

1.1 REFERENCES
1.2 DEFINITIONS
1.2.1 Environmental Pollution and Damage
1.2.2 Environmental Protection
1.2.3 Contractor Generated Hazardous Waste
1.2.4 Land Application for Discharge Water
1.2.5 Surface Discharge
1.2.6 Waters of the United States
1.2.7 Wetlands
1.2.8 Waste Material Definitions
1.3 GENERAL REQUIREMENTS
1.4 SUBCONTRACTORS
1.5 PAYMENT
1.6 SUBMITTALS
1.7 ENVIRONMENTAL PROTECTION PLAN
1.7.1 Compliance
1.7.2 Contents
1.7.3 Appendix
1.7.4 Contractor's Responsibility for Health and Safety
1.7.4.1 Health and Safety Officer Qualifications
1.7.4.2 Safety and Health Manager Responsibilitie
1.8 PROTECTION FEATURES
1.9 SPECIAL ENVIRONMENTAL REQUIREMENTS
1.9.1 Degraded Groundwater
1.9.2 Landfills
1.9.3 Waste Encountered
1.9.3.1 Landfill Liners
1.10 ENVIRONMENTAL ASSESSMENT OF CONTRACT DEVIATIONS
1.11 NOTIFICATION

PART 2 PRODUCTS (NOT USED)

PART 3 EXECUTION

3.1 ENVIRONMENTAL PERMITS AND COMMITMENTS
3.2 LAND RESOURCES
3.2.1 Work Area Limits
3.2.2 Landscape
3.2.3 Erosion and Sediment Controls
3.2.4 Contractor Facilities and Work Areas
3.3 WATER RESOURCES
3.4 AIR RESOURCES

3.4.1 Particulates
3.4.2 Odors
3.4.3 Sound Intrusions
3.4.4 Burning
3.5 CHEMICAL MATERIALS MANAGEMENT AND WASTE DISPOSAL
3.5.1 Solid Wastes
3.5.2 Chemicals and Chemical Wastes
3.5.3 Contractor Generated Hazardous Wastes/Excess Hazardous Materials
3.5.4 Fuel and Lubricants
3.6 RECYCLING AND WASTE MINIMIZATION
3.7 HISTORICAL, ARCHAEOLOGICAL, AND CULTURAL RESOURCES
3.8 BIOLOGICAL RESOURCES
3.9 PREVIOUSLY USED EQUIPMENT
3.10 MAINTENANCE OF POLLUTION FACILITIES
3.11 TRAINING OF CONTRACTOR PERSONNEL
3.12 POST CONSTRUCTION CLEANUP

-- End of Section Table of Contents --

SECTION 01355

ENVIRONMENTAL PROTECTION

PART 1 GENERAL

1.1 REFERENCES

The publications listed below form a part of this specification to the extent referenced. The publications are referred to in the text by basic designation only.

ASTM INTERNATIONAL (ASTM)

ASTM D 2488	(2000) Description and Identification of Soils (Visual-Manual Procedure)

ARIZONA REVISED STATUTES (ARS)

ARS 49-701	Arizona Laws Relating to Environmental Quality Chapter 4 Solid Waste Management
ARS 49-851.A(5)	Management of Special Waste Definitions
ARS 49-921(5)	Hazardous Waste Definitions
ARS 44 Chapter 9 Article 8	Waste Tire Disposal

U.S. ARMY CORPS OF ENGINEERS (USACE)

EM 385-1-1	(1996) U.S. Army Corps of Engineers Safety and Health Requirements Manual
WETLAND MANUAL	Corps of Engineers Wetlands Delineation Manual Technical Report Y-87-1

U.S. NATIONAL ARCHIVES AND RECORDS ADMINISTRATION (NARA)

29 CFR 1910	Occupational Safety and Health Standards
29 CFR 1926	Safety and Health Regulations for Construction
33 CFR 328	Definitions of Waters of the United States
40 CFR 261	Identification and Listing of Hazardous Waste
40 CFR 262	Standards Applicable to Generators of Hazardous Waste

40 CFR 279	Standards for the Management of Used Oil
49 CFR 171 - 178	Hazardous Materials Regulations

1.2 DEFINITIONS

1.2.1 Environmental Pollution and Damage

Environmental pollution and damage is the presence of chemical, physical, or biological elements or agents which adversely affect human health or welfare; unfavorably alter ecological balances of importance to human life; affect other species of importance to humankind; or degrade the environment aesthetically, culturally and/or historically.

1.2.2 Environmental Protection

Environmental protection is the prevention/control of pollution and habitat disruption that may occur to the environment during construction. The control of environmental pollution and damage requires consideration of land, water, and air; biological and cultural resources; and includes management of visual aesthetics; noise; solid, chemical, gaseous, and liquid waste; radiant energy and radioactive material as well as other pollutants.

1.2.3 Contractor Generated Hazardous Waste

Contractor generated hazardous waste means materials that, if abandoned or disposed of, may meet the definition of a hazardous waste. These waste streams would typically consist of material brought on site by the Contractor to execute work, but are not fully consumed during the course of construction. Examples include, but are not limited to, excess paint thinners (i.e. methyl ethyl ketone, toluene etc.), waste thinners,excess paints, excess solvents, waste solvents, and excess pesticides, and contaminated pesticide equipment rinse water.

1.2.4 Land Application for Discharge Water

The term "Land Application" for discharge water implies that the Contractor shall discharge water at a rate which allows the water to percolate into the soil. No sheeting action, soil erosion, discharge into storm sewers, discharge into defined drainage areas, or discharge into the "waters of the United States" shall occur. Land Application shall be in compliance with all applicable Federal, State, and local laws and regulations.

1.2.5 Surface Discharge

The term "Surface Discharge" implies that the water is discharged with possible sheeting action and subsequent soil erosion may occur. Waters that are surface discharged may terminate in drainage ditches, storm sewers,creeks, and/or "waters of the United States" and would require a permit to discharge water from the governing agency.

1.2.6 Waters of the United States

All waters which are under the jurisdiction of the Clean Water Act, as defined in 33 CFR 328.

1.2.7 Wetlands

Wetlands means those areas that are inundated or saturated by surface or ground water at a frequency and duration sufficient to support, and that under normal circumstances do support, a prevalence of vegetation typically adapted for life in saturated soil conditions. Wetlands generally include swamps, marshes, and bogs. Official determination of whether or not an area is classified as a wetland shall be done in accordance with WETLAND MANUAL.

1.2.8 Waste Material Definitions

For purposes of the Rio Salado Project, the following definitions shall apply.

a. Unsatisfactory material: Materials that do not comply with the requirements for satisfactory material as specified in Section 02300 EARTHWORK.

b. Inert Material: Inert material is material as defined by ARS 49-701 (15), i.e. material that is not flammable, will not decompose, and will not leach significant concentrations of environmental contaminants. Typically for this project it will include concrete, asphaltic materials, metal reinforcement in concrete, and similar materials. It does not include wood, tires, metal, or contaminated soils in significant amounts.

c. Construction Debris: Construction debris is material as defined by ARS 49-701 (5). It typically includes lumber, insulating material, drywall, concrete block, and similar products. Some landfills are permitted to receive construction debris, but not household waste.

d. Household Waste: Household waste is material as defined by ARS 49-701 (14), including general garbage and rubbish from household sources. For the Rio Salado project, it includes material excavated from landfills known to have accepted these types of wastes, but does not include inert material and construction debris where those materials are separable from the household waste.

e. Mixed Waste: Mixed waste is material that include two or more of the following waste types; construction debris, inert material, household waste, tires, and other special waste.

f. Special Waste: Includes material as defined by ARS 49-851.A(5). For the Rio Salado project, the type of special waste most likely to be encountered is petroleum contaminated soil where the concentration of petroleum products as determined by laboratory analysis exceeds non-residential soil cleanup standards

established by the Arizona Department of Environmental Quality.

g. Hazardous Waste: Hazardous waste is material as defined by ARS 49-921(5). Hazardous waste is typically defined as a result of exceeding certain established concentrations of contaminants, or by possessing characteristics such as toxicity, flammability, or explosive potential. In accordance with this, these types of materials, if encountered will be handled by the Contractor under a contingency plan.

1.3 GENERAL REQUIREMENTS

The Contractor shall minimize environmental pollution and damage that may occur as the result of construction operations. The environmental resources within the project boundaries and those affected outside the limits of permanent work shall be protected during the entire duration of this contract. The Contractor shall comply with all applicable environmental Federal, State, and local laws and regulations. The Contractor shall be responsible for any delays resulting from failure to comply with environmental laws and regulations.

1.4 SUBCONTRACTORS

The Contractor shall ensure compliance with this section by subcontractors.

1.5 PAYMENT

No separate payment will be made for work covered under this section. The Contractor shall be responsible for payment of fees associated with environmental permits, application, and/or notices obtained by the Contractor. All costs associated with this section shall be included in the contract price. The Contractor shall be responsible for payment of all fines/fees for violation or non-compliance with Federal, State, Regional and local laws and regulations.

1.6 SUBMITTALS

Government approval is required for submittals with a "G" designation; submittals not having a "G" designation are for information only. When used, a designation following the "G" designation identifies the office that will review the submittal for the Government. The following shall be submitted in accordance with Section 01330 SUBMITTAL PROCEDURES:

SD-01 Preconstruction Submittals

Environmental Protection Plan; G, RE

Health and Safety Plan; G, RE

1.7 ENVIRONMENTAL PROTECTION PLAN

Prior to commencing construction activities or delivery of materials to the site, the Contractor shall submit an Environmental Protection Plan for review and approval by the Contracting Officer. The purpose of the

Environmental Protection Plan is to present a comprehensive overview of known or potential environmental issues which the Contractor shall address during construction. Issues of concern shall be defined within the Environmental Protection Plan as outlined in this section. The Contractor shall address each topic at a level of detail commensurate with the environmental issue and required construction task(s). Topics or issues which are not identified in this section, but which the Contractor considers necessary, shall be identified and discussed after those items formally identified in this section. Prior to submittal of the Environmental Protection Plan, the Contractor shall meet with the Contracting Officer for the purpose of discussing the implementation of the initial Environmental Protection Plan; possible subsequent additions and revisions to the plan including any reporting requirements; and methods for administration of the Contractor's Environmental Plans. The Environmental Protection Plan shall be current and maintained onsite by the Contractor.

1.7.1 Compliance

No requirement in this Section shall be construed as relieving the Contractor of any applicable Federal, State, and local environmental protection laws and regulations. During Construction, the Contractor shall be responsible for identifying, implementing, and submitting for approval any additional requirements to be included in the Environmental Protection Plan.

1.7.2 Contents

The environmental protection plan shall include, but shall not be limited to, the following:

a. Name(s) of person(s) within the Contractor's organization who is(are) responsible for ensuring adherence to the Environmental Protection Plan.

b. Name(s) and qualifications of person(s) responsible for manifesting hazardous waste to be removed from the site, if applicable.

c. Name(s) and qualifications of person(s) responsible for training the Contractor's environmental protection personnel.

d. Description of the Contractor's environmental protection personnel training program.

e. Traffic control plans including measures to reduce erosion of temporary roadbeds by construction traffic, especially during wet weather. Plan shall include measures to minimize the amount of mud transported onto paved public roads by vehicles or runoff.

f. Work area plan showing the proposed activity in each portion of the area and identifying the areas of limited use or nonuse. Plan should include measures for marking the limits of use areas including methods for protection of features to be preserved within authorized work areas.

g. The Spill Control plan shall be included in the SWPPP described in Section 01356 STORM WATER POLLUTION PREVENTION MEASURES.

h. A Waste Identification, Handling and Disposal Work Plan for inert debris, construction debris, household waste, tires, and mixed wastes comprised of these materials, which are encountered on site. This plan shall address in considerable detail how the Contractor plans to respond to the requirements discussed in Paragraphs 1.9.2 and 1.9.3 of this specification.

i. A recycling and solid waste minimization plan with a list of measures to reduce consumption of energy and natural resources. The plan shall detail the Contractor's actions to comply with and to participate in Federal, State, Regional, and local Government sponsored recycling programs to reduce the volume of solid waste at the source.

j. An air pollution control plan detailing provisions to assure that dust, debris, materials, trash, etc., do not become air borne and travel off the project site.

k. A contaminant prevention plan that: identifies potentially hazardous substances to be used on the job site; identifies the intended actions to prevent introduction of such materials into the air, water, or ground; and details provisions for compliance with Federal, State, and local laws and regulations for storage and handling of these materials. In accordance with EM 385-1-1, a copy of the Material Safety Data Sheets (MSDS) and the maximum quantity of each hazardous material to be on site at any given time shall be included in the contaminant prevention plan. As new hazardous materials are brought on site or removed from the site, the plan shall be updated.

l. A Waste Water Management Plan that identifies the methods and procedures for management and/or discharge of waste waters which are directly derived from construction activities, such as concrete curing water, clean-up water, dewatering of ground water, disinfection water, hydrostatic test water, and water used in flushing of lines. If a settling/retention pond is required, the plan shall include the design of the pond including Drawings, removal plan, and testing requirements for possible pollutants. If land application will be the method of disposal for the waste water, the plan shall include a sketch showing the location for land application along with a description of the pretreatment methods to be implemented. If surface discharge will be the method of disposal, a copy of the permit and associated documents shall be included as an attachment prior to discharging the waste water. If disposal is to a sanitary sewer, the plan shall include documentation that the City of Phoenix Waste Water Treatment Plant Operator has approved the flow rate, volume, and type of discharge.

m. A historical, archaeological, cultural resources biological resources and wetlands plan that defines procedures for

identifying and protecting historical, archaeological, cultural resources, biological resources and wetlands known to be on the project site: and/or identifies procedures to be followed if historical archaeological, cultural resources, biological resources and wetlands not previously known to be onsite or in the area are discovered during construction. The plan shall include methods to assure the protection of known or discovered resources and shall identify lines of communication between Contractor personnel and the Contracting Officer.

n. Hazardous and Special Waste Contingency Plan. The contractor shall prepare a Hazardous and Special Wastes Contingency that can be implemented should these suspected waste types be encountered during excavation, dewatering of degraded groundwater as described in paragraph 1.9.1, or any other construction activities. The plan will address the specific actions the contractor will take should this material be encountered. At a minimum the actions will include; methods for identification of suspected waste, protection of the public and workforce; monitoring, isolation of material; characterization of waste type, and removal of the hazardous or special waste in accordance with all regulations. Any encountered hazardous or special waste shall be removed to the full extent of the wastes from the project site, unless otherwise directed by the Contracting Officer. The plan shall address encountering suspected petroleum contaminated material, asbestos containing material, or unknown suspected hazardous material.

The contractor shall be prepared to implement the contingency plan within 24-hours of being directed by the Contraction Officer. If the Contractor does not have the in-house capabilities or is not licensed to perform this work, they will make prior arrangement to have an on-call environmental response subcontractor ready to perform the work.

1.7.3 Appendix

Copies of all environmental permits, permit application packages, approvals to construct, notifications, certifications, reports, and termination documents shall be attached, as an appendix, to the Environmental Protection Plan.

1.7.4 Contractor's Responsibility for Health and Safety

The Contractor shall be solely responsible for health, safety, and protection of all its personnel and subcontractor's personnel during the performance of the Work in these Contract Documents. Contractor health and safety requirements shall be in accordance with the guidelines established by OSHA in the March 6, 1989 Federal Register 29 CFR 1910) "Hazardous Waste Operations and Emergency Response; Final Rule."

The Contractor shall develop and implement a site-specific health and safety plan (Health and Safety Plan) that meets the requirements of 29 CFR 1910(i). The Health and Safety Plan will be reviewed by the Contracting Officer. The Health and Safety Plan shall include discussion of, but not be limited to, the following:

a. Work Areas, including:

1. Zone 1 - Exclusion Zone.
2. Zone 2 - Contaminant Reduction Zone.
3. Zone 3 - Support Zone.

b. Personnel Protection Program.

c. Initial Onsite Training for Personnel.

d. Emergency and First-Aid Requirements.

e. Personal Hygiene and Decontamination.

f. Air Monitoring.

g. List of Contractor's competent person for each construction activity per OSHA requirements.

h. A contingency plan should suspected hazardous waste or special waste be encountered.

Information relating to the site, including site H&S Plan is attached as Appendix A. This information may be useful to the Contractor in developing a Health and Safety Plan and preparing the bid; however, the Contracting Officer makes no warranty as to the completeness or adequacy of the information. The Contractor shall collect added information as needed to prepare the Health and Safety Plan.

Submit the required "Contractor Medical and Training Certification Letter" to certify that the Contractor's personnel and subcontractors are participating in a medical surveillance program according to 29 CFR 1910(f) and 29 CFR 1910, and that the Contractor's personnel have been trained according to 29 CFR 1910. Submit the "Contractor Medical and Training Certification Letter: prior to initiation of any field construction activities. Each employee who will be performing activities with potential for exposure to hazardous waste shall meet these requirements and shall be listed on the certification letter by name. Addition of any employees after initiation of field construction activities shall require a resubmittal of this letter.

1.7.4.1 Health and Safety Officer Qualifications

The Contractor shall provide a designated Health and Safety Officer to implement, monitor, and enforce the Health and Safety Plan. The Health and Safety Officer shall be approved by the Contracting Officer and have the following qualifications:

a. Satisfactory completion of 40 hours initial training in Hazardous Waste Site Field Investigation, 3 days onsite apprenticeship, and 8 hours of specialized training.

b. Current certification in cardiopulmonary resuscitation (CPR) and

multimedia first aid.

c. Attendance at refresher training within the past 12 months.

d. Knowledge of emergency preparedness techniques and considerations, including:

1. Onsite accidents/exposure.
2. Procedures for medical emergencies.
3. Heat stress and cold stress prevention, symptomology, and treatment.

e. Specific familiarity with OSHA regulations for general industry (29 CFR 1910) and the construction industry (29 CFR 1926).

f. Experience in implementing the above-cited OSHA regulations as a designated Health and Safety Officer.

g. Experience working on one or more hazardous waste sites.

h. Experience with the types of activities that will be conducted at the site.

i. Experience with air monitoring equipment operation.

j. Experience with asbestos removal.

1.7.4.2 Safety and Health Manager Responsibilitie

The Safety and Health Manager shall:

a. Be responsible for the development, implementation, oversight, and enforcement of the SSHP and shall have no responsibilities besides health and safety.

b. Sign and date the SSHP prior to submittal.

c. Conduct initial site-specific training.

d. Be present on-site during all construction activities.

e. Audit the effectiveness of the SSHP.

f. Be available for emergencies.

g. Provide onsite consultation as needed to ensure the SSHP is fully implemented.

h. Coordinate any modifications to the SSHP with the Site Superintendent, the SSHO, and the Contracting Officer.

i. Provide continued support for upgrading/downgrading of the level of personal protection.

j. Be responsible for evaluating air monitoring data and recommending changes to engineering controls, work practices, and PPE.

k. Review accident reports and results of daily inspections.

l. Serve as a member of the Contractor's quality control staff.

Contractor shall do all work necessary to protect the facility employees and the general public from hazards. Temporary chain link fencing, solid fencing, barricades, flashing lights, and proper signs shall be furnished and installed in sufficient quantity to safeguard the public and the work.

1.8 PROTECTION FEATURES

This paragraph supplements the Contract Clause PROTECTION OF EXISTING VEGETATION, STRUCTURES, EQUIPMENT, UTILITIES, AND IMPROVEMENTS. Prior to start of any onsite construction activities, the Contractor and the Contracting Officer shall make a joint condition survey. Immediately following the survey, the Contractor shall prepare a brief report including a plan describing the features requiring protection under the provisions of the Contract Clauses, which are not specifically identified on the Drawings as environmental features requiring protection along with the condition of trees, shrubs and grassed areas immediately adjacent to the site of work and adjacent to the Contractor's assigned storage area and access route(s), as applicable. This survey report shall be signed by both the the Contractor and the Contracting Officer upon mutual agreement as to its accuracy and completeness. The Contractor shall protect those environmental features included in the survey report and any indicated on the Drawings, regardless of interference which their preservation may cause to the Contractor's work under the contract.

Should the Contractor damage any trees identified for protection a credit will be issued to the Contracting Officer in accordance with the following schedule:

Less than 1-1/2 inches up to less than 2-1/2 inches caliper: $1000
2-1/2 inches up to less than 3-1/2 inches caliper: $1250
3-1/2 inches caliper and greater: $1500

1.9 SPECIAL ENVIRONMENTAL REQUIREMENTS

The Contractor shall comply with the special environmental requirements for this project.

1.9.1 Degraded Groundwater

The reach of the Salt River in which the project is located is in the vicinity of a number of study areas of the State of Arizona Water Quality Assurance Revolving Fund (WQARF). The WQARF program is designed to study and clean-up areas of degraded groundwater. Environmental Assessment Reports for the project location are available for review at the City of Phoenix (COP), ATTN. Mr. Walt Kinsler, 200 West Washington St., Phoenix, AZ 85003, Telephone (602) 534-2160. Reference is made to the INSTRUCTIONS TO BIDDERS (Section 00100) which explains the Government's opinion of these

reports. The Contractor is responsible for obtaining and reviewing these reports as part of the bidding process. These assessments suggest that degraded groundwater will be present beneath some portions of the project during construction, but current indications are that the levels of contaminants are not high enough to be a hazard to worker health and safety according to a risk assessment prepared for this project. At least one employee who is certified in the OSHA 40-hour hazardous material training shall be present on site at all times during excavation activities. Proof of certification shall be provided to the Contracting Officer at the Pre-Construction meeting.

1.9.2 Landfills

There are a number of old landfill sites located along the river corridor within or adjacent to the Rio Salado project boundaries. These landfills may contain a variety of wastes including inert materials, construction debris, household wastes, special wastes, tires, and some hazardous waste. Landfill materials may be encountered during excavation and clearing, Environmental assessments of the project location are available for review from the Government. The Contractor shall be responsible for obtaining and reviewing these reports as part of the bidding process.

Investigations for landfill material, trash and debris have recently been completed and results of these investigations are available for review from the Government. These results are provided for information only, and represent conditions only at the boring locations and depths shown. No other assumptions as to the existence or non-existence of landfill material, trash or debris is to be inferred from this information. A figure showing the approximate location of known landfills is indicated at the end of this section.

The Contractor shall construct berms to divert nuisance flows away from any exposed suspect material. The Contractor shall keep adequately trained staff on site during construction activities where such landfill materials may be encountered. At least one employee who is certified in the OSHA 40-hour hazardous material training shall be present on site at all times during excavation activities. Proof of certification shall be provided to the Contracting Officer at the Pre-Construction meeting. Such staff shall be able to distinguish between inert wastes and soil stains, rubbish and other household or potentially hazardous wastes. If during construction, the Contractor encounters soil stains, chemical or petroleum odors, rubbish, household waste or what he believes may be other potentially regulated substances, he will immediately notify the Contracting Officer, and if necessary stop work only in this area. The Contracting Officer may notify the City of Phoenix (COP) environmental staff who will visit the work area, determine whether any immediate precautions should be taken, and make an evaluation of the appropriate characterization and disposal alternatives. At the same time the Contractor shall implement the Waste Identification, Handling and Disposal Work Plan.

Methane gas is often associated with household waste disposal sites, and has been detected at some locations within or adjacent to the project area. Such locations may include but are not limited to the former Central Avenue Landfill, 7th Avenue Landfill, 19th Avenue Landfill, and Del Rio

Landfill as well as other locations along the river corridor.

The Contractor shall take appropriate precautions and actions as described in the Contractors Health and Safety Plan (HSP), and in the Contingency Response Plan and shall adhere to the excavation safety requirements of 29 CFR 1926. The Contractor shall also perform appropriate monitoring of activities as required by the Health and Safety Plan including monitoring for methane gas and submit all results to the Contracting Officer.

1.9.3 Waste Encountered

Upon encountering any waste materials the Contractor shall immediately notify the Contracting Officer of the location of this material and allow the Contracting Officer and the City of Phoenix (COP) full access to the site to inspect the wastes and recommend further procedures. The Contractor shall provide information necessary to comply with ARS 49-701 to the Contracting Officer. At a minimum, upon encountering any waste, including inert materials, construction debris, household waste, special waste, tires and hazardous waste the Contractor shall notify the Contracting Officer of the location of this material by station points and offsets.

All waste materials will be characterized by the Contractor, including the lateral and horizontal extent of the waste materials. If characterization indicates the materials are determined to be hazardous waste, the material will be segregated by the Contractor's on-call environmental contractor. Once this has been accomplished the Contractor, at the direction of the Contracting Officer, can remove and dispose of all non-hazardous materials. This includes construction debris, inert material, special wastes and household wastes.

The Contractor shall separate inert material, construction debris and tires from native materials or other wastes. Construction debris and inert material loads containing more than 30% native soil materials, as determined by the Contracting Officer, will be paid as general soil excavation. Native materials separated from inert materials and construction debris may be used as backfill, if deemed appropriate by the Contracting Officer, or may be disposed of offsite as excess soil material.

In the event that household or special waste materials, or other unclassified mixed materials are encountered, the Contracting Officer may direct the Contractor to remove the material to a designated stockpile area indicated on the drawings, or may be directed to dispose of the material in accordance with the Waste Identification, Handling and Disposal plan. In either case, the Contractor shall separate inert materials from these waste materials, unless otherwise directed by the Contracting Officer.

Materials taken to a stockpile area may, at the direction of the Contracting Officer, be segregated. Once segregated, the materials shall be disposed of in accordance with the waste handling and disposal plan. Waste segregation and disposal shall be completed within 75 days of the date the initial load of waste was placed in the stockpile area.

All tires or pieces of tires greater than 6 inches removed during

excavation activities or recovered from the ground surface shall be handled, stored, transported, and disposed of in accordance with applicable federal, state, and local regulations. Applicable state regulations include: Arizona Revised Statutes ARS 44 Chapter 9 Article 8.

A Landfill Use Permit will be required for all landfill disposals. Charges will be levied for each load delivered to the landfill in accordance with the current fee schedule.

Alternatively, the Contracting Officer may direct that the materials be disposed of without segregation. If so directed, the Contractor shall complete the disposal of the stockpile materials within 28 days. If the stockpile materials represent a mixture of wastes, the Contractor shall select the most cost-effective waste disposal option available under applicable regulatory constraints.

If flows in the river are imminent, such household waste or special waste shall be removed immediately before flows occur.

In all cases where waste materials of any type have been removed below the finished grade elevation, the resulting void shall be backfilled and compacted to neat line in accordance with Section 02300 EARTHWORK.

Within fourteen days of removal and disposal of any waste materials, the Contractor shall, unless otherwise directed by the Contracting Officer, provide the following information.

a. A written description of the removal project, including the types of material, approximate quantity, location and approximate dimensions of the excavation, a description of waste handling, storage, and transportation practices, and a description of the disposal method and location and approximate dimensions of the excavation.

b. Supporting documentation such as load receipts, manifests, etc.

1.9.3.1 Landfill Liners

The Contractor shall be responsible for odor and vector control of any household waste or special waste, or any unclassified waste as required, that is exposed during excavation activities. To mitigate these concerns, the Contractor shall be responsible to apply a temporary liner over any exposed face of any such waste at the end of each working day. However, if the temporary liner applied by the Contractor has been removed or disturbed, the Contractor shall be responsible for the re-application of the temporary liner.

A temporary liner shall be applied whenever household waste or special waste remains exposed overnight. A temporary liner for exposed waste shall consist of one of the following or other pre-approved equivalent methods:

a. A spray-on material such as Sanifoamâ, Posi-Shellâ, or pre-approved equivalent, applied in accordance with manufacturer's specifications.

b. A one foot layer of soil consisting of Unified Soil Classification System (ASTM D 2488) type GM or finer.

c. A weighted tarp cover consisting of geosynthetic, cloth, or other pre-approved equal.

In addition to the use of any synthetic temporary liner, a stockpile of fine-grained soils will be maintained to provide temporary cover or fire suppression whenever excavation activities may encounter significant accumulations (more than 10 cubic yards) of decomposing or flammable waste. The soil shall consist of Unified Soil Classification System (ASTM D 2488) type SM or finer. The stockpile shall be located within one-quarter mile of excavation activities, and shall be an amount capable of covering the exposed burning or smoldering waste to a depth of at least three feet.

Prior to placement of structures, placement of backfill at such structures, any household waste or special waste remaining in place shall be completely covered with a permanent liner.

The permanent liner will consist of a layer of low permeability soil placed over the exposed trash. The soil shall consist of Unifed Soil Classification System (ASTM D 2488) type GM or finer with a test maximum permeability of $1X10^{-5}$ cm/s. Prior to placement of the liner, the exposed waste will be graded smooth so that there is no flagging trash or loose materials. The liner shall be placed in three lifts and extend at least the edge of the excavation. The soil layer will be placed and compacted to a thickness of at least 18 inches at a minimum of 90 percent relative density.

1.10 ENVIRONMENTAL ASSESSMENT OF CONTRACT DEVIATIONS

Any deviations, requested by the Contractor, from the Drawings, plans and specifications which may have an environmental impact will be subject to approval by the Contracting Officer and may require an extended review, processing, and approval time. The Contracting Officer reserves the right to disapprove alternate methods, even if they are more cost effective, if the Contracting Officer determines that the proposed alternate method will have an adverse environmental impact.

1.11 NOTIFICATION

The Contracting Officer will notify the Contractor in writing of any observed noncompliance with Federal, State or local environmental laws or regulations, permits, and other elements of the Contractor's Environmental Protection plan. The Contractor shall, after receipt of such notice, inform the Contracting Officer of the proposed corrective action and take such action when approved by the Contracting Officer. The Contracting Officer may issue an order stopping all or part of the work until satisfactory corrective action has been taken. No time extensions shall be granted or equitable adjustments allowed to the Contractor for any such suspensions. This is in addition to any other actions the Contracting Officer may take under the contract, or in accordance with the Federal Acquisition Regulation or Federal Law.

PART 2 PRODUCTS (NOT USED)

PART 3 EXECUTION

3.1 ENVIRONMENTAL PERMITS AND COMMITMENTS

This paragraph supplements the Contractor's responsibility under the contract clause "PERMITS AND RESPONSIBILITIES" to the extent that the Government has obtained the environmental permits. The Contractor shall comply with the terms and conditions of the attached list of environmental commitments specified in Section 01200 GENERAL REQUIREMENTS.

The Contractor shall be responsible for obtaining and complying with all environmental permits and commitments required by Federal, State, Regional, and local environmental laws and regulations including those listed in Section 01200 GENERAL REQUIREMENTS.

3.2 LAND RESOURCES

The Contractor shall confine all activities to areas defined by the Drawings and specifications. Prior to the beginning of any construction, the Contractor shall identify any land resources to be preserved within the work area. Except in areas indicated on the Drawings or specified to be cleared, the Contractor shall not remove, cut, deface, injure, or destroy land resources including trees, shrubs, vines, grasses, topsoil, and land forms without approval from the Contracting Officer. No ropes, cables, or guys shall be fastened to or attached to any trees for anchorage unless specifically authorized. The Contractor shall provide effective protection for land and vegetation resources at all times as defined in the following subparagraphs. Stone, soil, or other materials displaced into uncleared areas shall be removed by the Contractor.

3.2.1 Work Area Limits

Prior to commencing construction activities, the Contractor shall mark the areas that need to be disturbed under this contract. Isolated areas within the general work area which are not to be disturbed shall be marked or fenced. Monuments and markers shall be protected before construction operations commence. Where construction operations are to be conducted during darkness, any markers shall be visible in the dark. The Contractor's personnel shall be knowledgeable of the purpose for marking and/or protecting particular objects.

3.2.2 Landscape

Trees, shrubs, indicated and defined on the Drawings to be preserved shall be clearly identified by marking, fencing, or wrapping with boards, or any other approved techniques. The Contractor shall restore in-kind the landscape features damaged or destroyed during construction operations outside the limits of the approved work area.

3.2.3 Erosion and Sediment Controls

The Contractor shall be responsible for providing erosion and sediment control measures in accordance with Federal, State, and local laws and regulations. The erosion and sediment controls selected and maintained by the Contractor shall be such that water quality standards are not violated as a result of the Contractor's construction activities. The Contractor shall construct or install temporary and permanent erosion and sediment control Best Management Practices (BMPs) as specified in Section 01356 STORM WATER POLLUTION PREVENTION MEASURES.

3.2.4 Contractor Facilities and Work Areas

The Contractor's field offices, staging areas, stockpile storage, and temporary buildings shall be placed in areas designated on the Drawings or as directed by the Contracting Officer. Temporary movement or relocation of Contractor facilities shall be made only when approved. Erosion and sediment controls shall be provided for on-site stockpile areas to prevent sediment from entering nearby waters. Temporary excavation and embankments for plant and/or work areas shall be controlled to protect adjacent areas.

3.3 WATER RESOURCES

The Contractor shall monitor construction activities to prevent pollution of surface and ground waters. Toxic or hazardous chemicals shall not be applied to soil or vegetation unless otherwise indicated. All water areas affected by construction activities shall be monitored by the Contractor. For construction activities immediately adjacent to impaired surface waters, the Contractor shall be capable of quantifying sediment or pollutant loading to that surface water when required by State or Federally issued Clean Water Act permits.

The Contractor shall ensure that chemical applicators of pesticides, herbicides, wood preservatives, or any other such materials be certified by the Arizona Structural Pest Control Commission under the relevant certification category. Applicators shall be certified under the category relevant to the chemical application activity and all certifications shall be current. The Contractor shall ensure that chemical storage and application activities are carried out under the best practice guidelines of the Structural Pest Control Commission and the Best Management Practices developed for the City of Phoenix NPDES Permit No. AZ0024554, a copy of which is available for review at the Phoenix Area Office of the USACE.

3.4 AIR RESOURCES

Equipment operation, activities, or processes performed by the Contractor shall be in accordance with all Federal, State and county air emission and performance laws and standards. The Contractor shall obtain a Dust Control Permit from Maricopa County.

3.4.1 Particulates

Dust particles; aerosols and gaseous by-products from construction activities; and processing and preparation of materials, such as from asphaltic batch plants; shall be controlled at all times, including weekends, holidays and hours when work is not in progress. The Contractor

shall maintain excavations, stockpiles, haul roads, permanent and temporary access roads, plant sites, spoil areas, borrow areas, and other work areas within or outside the project boundaries free from particulates which would cause the Federal, State, and local air pollution standards to be exceeded or which would cause a hazard or a nuisance. Sprinkling will be permitted to control particulates in the work area. Sprinkling, to be efficient, shall be repeated to keep the disturbed area damp at all times. The Contractor shall have sufficient, competent equipment available to accomplish these tasks. Particulate control shall be performed as the work proceeds and whenever a particulate nuisance or hazard occurs. The Contractor shall comply with all State and local visibility regulations.

3.4.2 Odors

Odors from construction activities shall be controlled at all times. The odors shall not cause a health hazard and shall be in compliance with State regulations and/or local ordinances.

3.4.3 Sound Intrusions

The Contractor shall keep construction activities under surveillance and control to minimize environment damage by noise. The Contractor shall comply with the provisions of the State of Arizona rules.

3.4.4 Burning

Burning will not be allowed on the project site unless specified in other sections of the specifications or authorized in writing by the Contracting Officer. The specific time, location, and manner of burning shall be subject to approval.

3.5 CHEMICAL MATERIALS MANAGEMENT AND WASTE DISPOSAL

Disposal of wastes excluding waste as described in Section 02230 SITE CLEARING AND OBSTRUCTIONS REMOVAL shall be as directed below, unless otherwise specified in other sections and/or shown on the Drawings.

3.5.1 Solid Wastes

Solid wastes shall be placed in containers which are emptied on a regular schedule. Handling, storage, and disposal shall be conducted to prevent contamination. Segregation measures shall be employed so that no hazardous or toxic waste will become co-mingled with solid waste. The Contractor shall transport solid waste off the site and dispose of it in compliance with Federal, State, and local requirements for solid waste disposal. A Subtitle D RCRA permitted landfill shall be the minimum acceptable off-site solid waste disposal option. The Contractor shall verify that the selected transporters and disposal facilities have the necessary permits and licenses to operate.

3.5.2 Chemicals and Chemical Wastes

Chemicals shall be dispensed ensuring no spillage to the ground or water. Periodic inspections of dispensing areas to identify leakage and initiate

corrective action shall be performed and documented. This documentation will be periodically reviewed by the Government. Chemical waste shall be collected in corrosion resistant, compatible containers. Collection drums shall be monitored and removed to a staging or storage area when contents are within 6 inches of the top. Wastes shall be classified, managed, stored, and disposed of in accordance with Federal, State, and local laws and regulations.

3.5.3 Contractor Generated Hazardous Wastes/Excess Hazardous Materials

Hazardous wastes are defined in 40 CFR 261, or are as defined by applicable State and local regulations. Hazardous materials are defined in 49 CFR 171 - 178. The Contractor shall, at a minimum, manage and store hazardous waste in compliance with 40 CFR 262. The Contractor shall take sufficient measures to prevent spillage of hazardous and toxic materials during dispensing. The Contractor shall segregate hazardous waste from other materials and wastes, shall protect it from the weather by placing it in a safe covered location, and shall take precautionary measures such as berming or other appropriate measures against accidental spillage. The Contractor shall be responsible for storage, describing, packaging, labeling, marking, and placarding of hazardous waste and hazardous material in accordance with 49 CFR 171 - 178, State, and local laws and regulations. The Contractor shall transport Contractor generated hazardous waste off Government property within 60 days in accordance with the Environmental Protection Agency and the Department of Transportation laws and regulations. The Contractor shall dispose of hazardous waste in compliance with Federal, State and local laws and regulations. Spills of hazardous or toxic materials shall be immediately reported to the Contracting Officer. Cleanup and cleanup costs due to spills shall be the Contractor's responsibility. The disposition of Contractor generated hazardous waste and excess hazardous materials are the Contractor's responsibility.

3.5.4 Fuel and Lubricants

Storage, fueling and lubrication of equipment and motor vehicles shall be conducted in a manner that affords the maximum protection against spill and evaporation. Fuel, lubricants and oil shall be managed and stored in accordance with all Federal, State, Regional, and local laws and regulations. Used lubricants and used oil to be discarded shall be stored in marked corrosion-resistant containers and recycled or disposed in accordance with 40 CFR 279, State, and local laws and regulations. Storage of fuel on the project site shall be accordance with all Federal, State, and local laws and regulations. Fueling and maintenance of vehicles and equipment shall take place out of the river terrace area.

3.6 RECYCLING AND WASTE MINIMIZATION

The Contractor shall participate in State and local Government sponsored recycling programs. The Contractor is further encouraged to minimize solid waste generation throughout the duration of the project.

3.7 HISTORICAL, ARCHAEOLOGICAL, AND CULTURAL RESOURCES

Existing known historical, archaeological, and cultural resources within

the Contractor's work area are shown on the drawings. The Contractor shall protect these resources and shall be responsible for their preservation during the life of the Contract. If during excavation or other construction activities any previously unidentified or unanticipated historical, archaeological, and cultural resources are discovered or found, all activities that may damage or alter such resources shall be temporarily suspended. Resources covered by this paragraph include but are not limited to: any human skeletal remains or burials; artifacts; shell, midden, bone, charcoal, or other deposits; rock or coral alignments, pavings, wall, or other constructed features; and any indication of agricultural or other human activities. Upon such discovery or find, the Contractor shall immediately notify the Contracting Officer so that the appropriate authorities may be notified and a determination made as to their significance and what, if any, special disposition of the finds should be made. The Contractor shall cease all activities that may result in impact to or the destruction of these resources. The Contractor shall secure the area and prevent employees or other persons from trespassing on, removing, or otherwise disturbing such resources.

3.8 BIOLOGICAL RESOURCES

The Contractor shall minimize interference with, disturbance to, and damage to fish, wildlife, and plants including their habitat. The Contractor shall be responsible for the protection of threatened and endangered animal and plant species including their habitat in accordance with Federal, State, Regional, and local laws and regulations.

3.9 PREVIOUSLY USED EQUIPMENT

The Contractor shall clean all previously used construction equipment prior to bringing it onto the project site. The Contractor shall ensure that the equipment is free from soil residuals, egg deposits from plant pests, noxious weeds, and plant seeds. The Contractor shall consult with the USDA jurisdictional office for additional cleaning requirements.

3.10 MAINTENANCE OF POLLUTION FACILITIES

The Contractor shall maintain permanent and temporary pollution control facilities and devices for the duration of the contract or for that length of time construction activities create the particular pollutant.

3.11 TRAINING OF CONTRACTOR PERSONNEL

The Contractor's personnel shall be trained in all phases of environmental protection and pollution control. The Contractor shall conduct environmental protection/pollution control meetings for all Contractor personnel prior to commencing construction activities. Additional meetings shall be conducted for new personnel and when site conditions change. The training and meeting agenda shall include: methods of detecting and avoiding pollution; familiarization with statutory and contractual pollution standards; installation and care of devices, vegetative covers, and instruments required for monitoring purposes to ensure adequate and continuous environmental protection/pollution control; anticipated hazardous or toxic chemicals or wastes, and other regulated contaminants;

recognition and protection of archaeological sites, artifacts, wetlands, and endangered species and their habitat that are known to be in the area.

3.12 POST CONSTRUCTION CLEANUP

The Contractor shall clean up all areas used for construction in accordance with Contract Clause: "Cleaning Up". The Contractor shall, unless otherwise instructed in writing by the Contracting Officer, obliterate all signs of temporary construction facilities such as haul roads, work area, structures, foundations of temporary structures, stockpiles of excess or waste materials not indicated to remain, and other vestiges of construction prior to final acceptance of the work.

-- End of Section --

SECTION TABLE OF CONTENTS

DIVISION 01 - GENERAL REQUIREMENTS

SECTION 01356

STORM WATER POLLUTION PREVENTION MEASURES

PART 1 GENERAL

1.1 REFERENCES
1.2 GENERAL
1.3 PAYMENT
1.4 NATIONAL POLLUTANT DISCHARGE ELMINATION SYSTEM (NPDES) PERMIT
1.5 SUBMITTALS
1.6 EROSION AND SEDIMENT CONTROLS
1.7 STRUCTURAL PRACTICES
1.8 SILT FENCES
1.9 EROSION CONTROL BLANKETS
1.10 EROSION CONTROL ROLLS

PART 2 PRODUCTS

2.1 COMPONENTS FOR SILT FENCES
2.1.1 Filter Fabric
2.1.2 Silt Fence Stakes and Posts
2.1.3 Mill Certificate or Affidavit
2.1.4 Identification Storage and Handling

PART 3 EXECUTION

3.1 INSTALLATION OF SILT FENCES
3.2 INSTALLATION OF EROSION CONTROL BLANKETS
3.2.1 Slope Installations
3.2.2 Channel Installations
3.3 INSTALLATION OF EROSION CONTROL ROLLS
3.4 MAINTENANCE
3.4.1 Silt Fence Maintenance
3.5 INSPECTIONS
3.5.1 General
3.5.2 Inspections Details
3.5.3 Inspection Reports
3.6 CONTRACTOR WARRANTS

-- End of Section Table of Contents --

SECTION 01356

STORM WATER POLLUTION PREVENTION MEASURES

PART 1 GENERAL

1.1 REFERENCES

The publications listed below form a part of this specification to the extent referenced. The publications are referred to in the text by basic designation only.

ASTM INTERNATIONAL (ASTM)

ASTM D 4439	(2001) Geosynthetics
ASTM D 4491	(1999a) Water Permeability of Geotextiles by Permittivity
ASTM D 4533	(1991; R 1996) Trapezoid Tearing Strength of Geotextiles
ASTM D 4632	(1991; R 1996) Grab Breaking Load and Elongation of Geotextiles
ASTM D 4751	(1999a) Determining Apparent Opening Size of a Geotextile
ASTM D 4873	(2001) Identification, Storage, and Handling of Geosynthetic Rolls and Samples

1.2 GENERAL

The Contractor shall plan and implement the storm water pollution prevention measures specified in this section in a manner which will meet the requirements of Section 01355 ENVIRONMENTAL PROTECTION, and the requirements of the National Pollution Discharge Elimination System (NPDES) permit.

1.3 PAYMENT

No separate payment will be made for work covered under this section. The Contractor shall be responsible for payment of fees associated with environmental permits, application, and/or notices obtained by the Contractor. All costs associated with this section shall be included in the contract price. The Contractor shall be responsible for payment of all fines/fees for violation or non-compliance with Federal, State, Regional and local laws and regulations.

1.4 NATIONAL POLLUTANT DISCHARGE ELMINATION SYSTEM (NPDES) PERMIT

The Contractor will obtain all necessary NPDES and Storm Water Pollution Prevention Plan (SWPPP) permits as required.

a. This project is subject to the National Pollutant Discharge Elimination System (NPDES) storm water requirements for construction sites under the Environmental Protection Agency (EPA) General Permit for Arizona. Under provisions of that permit, the Contractor shall be designated as permittee, and shall take all necessary measures to assure compliance with the NPDES General Permit for Arizona as well as all other applicable Federal, State and local laws, ordinances, statutes, rules and regulations pertaining to Storm water discharge. As the permittee, the Contractor is responsible for preparing, in a manner acceptable to the EPA, all documents required by this regulation, including but not necessarily limited to:

   1. Storm Water Pollution Prevention Plan (SWPPP) for the project, including certification of compliance form. Contractor shall be required to develop, implement, update and revise the SWPPP, as necessary, in order to assure compliance with the EPA permit requirements. The SWPPP shall be retained on the project site at all times during construction.
   2. Notice of Intent (NOI) to assure compliance with the NPDES General Permit for Arizona, including certification of signatures.
   3. Notice of Termination (NOT) of coverage under NPDES General Permit for Arizona.

b. Preliminary copies of the NOI and the SWPPP shall be submitted to Contracting Officer during the pre-construction meeting and shall be subject to review by Contracting Officer prior to implementation.

c. Contractor shall submit the completed and duly signed NOI forms no later than forty-eight (48) hours prior to the initial start of construction on the project to the following agencies:

   Storm water Notice of Intent (4203)
   USEPA
   401 M Street, SW
   Washington, D.C. 20460

A copy of the completed NOI form shall be submitted to the following:

   Storm Water Coordinator
   Arizona Department of Environmental Quality
   P.O. Box 600
   Phoenix, AZ 85001-0600

   Gary W. Boesch, PE
   Stormwater Management Engineer
   200 West Washington Street, 5th Floor
   Phoenix, AZ 85003
   (602) 495-5326

Failure by the Contractor (or Subcontractors of any tier) to submit NOI's within the mandated time frame shall result in delay of the construction start date, and no claim for extension of time will be granted for such delay. A copy of the completed NOI shall be posted at the construction site.

1.5 SUBMITTALS

Government approval is required for submittals with a "G" designation; submittals not having a "G" designation are for information only. When used, a designation following the "G" designation identifies the office that will review the submittal for the Government. The following shall be submitted in accordance with Section 01330 SUBMITTAL PROCEDURES:

SD-01 Preconstruction Submittals

Storm Water Pollution Prevention Plan (SWPPP);G, RE

Notice of Intent (NOI);G, RE

SD-03 Product Data

Product data for storm water pollution prevention materials

SD-07 Certificates

Mill Certificate or Affidavit;

Certificate attesting that the Contractor has met all specified requirements.

1.6 EROSION AND SEDIMENT CONTROLS

The controls and measures required by the Contractor are described below.

1.7 STRUCTURAL PRACTICES

Structural practices shall be implemented to divert flows from exposed soils, temporarily store flows, or otherwise limit runoff and the discharge of pollutants from exposed areas of the site. Structural practices shall be implemented in a timely manner during the construction process to minimize erosion and sediment runoff. Structural practices shall include the following devices.

1.8 SILT FENCES

The Contractor shall provide silt fences as a temporary structural practice to minimize erosion and sediment runoff. Silt fences shall be properly installed to effectively retain sediment immediately after completing each phase of work where erosion would occur in the form of sheet and rill erosion (e.g. clearing and grubbing, excavation, embankment, and grading). Silt fences shall be installed in the locations indicated on the SWPPP. Final removal of silt fence barriers shall be upon approval by the Contracting Officer.

1.9 EROSION CONTROL BLANKETS

a. Erosion control blankets shall be composed of 100-percent virgin aspen excelsior wood fibers or 100-percent coconut fibers.

b. The fibers shall be encased top and bottom with polypropylene or 100-percent biodegradable natural organic fiber netting as specified in the special provisions.

c. Fibers shall be free of weed seed, and shall be locked in place to form a mat of consistent thickness. Fibers shall remain evenly distributed over the entire area of the blanket after being placed on the slope.

d. Fiber color shall be natural unless otherwise specified in the special provisions.

e. Erosion control blankets shall be furnished in four-foot to eight-foot wide rolls, and shall be wrapped with suitable material to protect against moisture and extensive ultraviolet exposure prior to placement.

f. Each roll shall be labeled to provide sufficient identification for quality control purposes.

g. Staples shall be U-shaped, 11 gauge steel wire, and shall be 1 inch wide by 6 inches long or 2 inches wide by 8 inches long.

1.10 EROSION CONTROL ROLLS

Erosion control rolls shall be composed of weed-free, 100-percent virgin aspen wood excelsior or rice straw in a tube of polyester or high density polyethylene netting. Netting at each end of the roll shall be secured with metal clips or knotted ends to assure fiber containment. The nominal diameter of the rolls shall be from 9 inches to 20 inches as indicated on the drawings. The length of the rolls shall be from 7 feet to 25 feet.

PART 2 PRODUCTS

2.1 COMPONENTS FOR SILT FENCES

2.1.1 Filter Fabric

The geotextile shall comply with the requirements of ASTM D 4439, and shall consist of polymeric filaments which are formed into a stable network such that filaments retain their relative positions. The filament shall consist of a long-chain synthetic polymer composed of at least 85 percent by weight of ester, propylene, or amide, and shall contain stabilizers and/or inhibitors added to the base plastic to make the filaments resistance to deterioration due to ultraviolet and heat exposure. Synthetic filter fabric shall contain ultraviolet ray inhibitors and stabilizers to provide a minimum of six months of expected usable construction life at a temperature range of 0 to 120 degrees F. The filter

fabric shall meet the following requirements:

FILTER FABRIC FOR SILT SCREEN FENCE

PHYSICAL PROPERTY	TEST PROCEDURE	STRENGTH REQUIREMENT
Grab Tensile	ASTM D 4632	100 lbs. min.
Elongation (%)		30 % max.
Trapezoid Tear	ASTM D 4533	55 lbs. min.
Permittivity	ASTM D 4491	0.2 sec-1
AOS (U.S. Std Sieve)	ASTM D 4751	20-100

2.1.2 Silt Fence Stakes and Posts

The Contractor may use either wooden stakes or steel posts for fence construction. Wooden stakes utilized for silt fence construction, shall have a minimum cross section of 2 inches by 2 inches when oak is used and 4 inches by 4 inches when pine is used, and shall have a minimum length of 5 feet. Steel posts (standard "U" or "T" section) utilized for silt fence construction, shall have a minimum weight of 1.33 pounds per linear foot and a minimum length of 5 feet.

2.1.3 Mill Certificate or Affidavit

A mill certificate or affidavit shall be provided attesting that the fabric and factory seams meet chemical, physical, and manufacturing requirements specified above. The mill certificate or affidavit shall specify the actual Minimum Average Roll Values and shall identify the fabric supplied by roll identification numbers. The Contractor shall submit a mill certificate or affidavit signed by a legally authorized official from the company manufacturing the filter fabric.

2.1.4 Identification Storage and Handling

Filter fabric shall be identified, stored and handled in accordance with ASTM D 4873.

PART 3 EXECUTION

3.1 INSTALLATION OF SILT FENCES

Silt fences shall extend a minimum of 16 inches above the ground surface and shall not exceed 34 inches above the ground surface. Filter fabric shall be from a continuous roll cut to the length of the barrier to avoid the use of joints. When joints are unavoidable, filter fabric shall be spliced together at a support post, with a minimum 6 inch overlap, and securely sealed. A trench shall be excavated approximately 4 inches wide and 4 inches deep on the upslope side of the location of the silt fence. The 4 inch by 4 inch trench shall be backfilled and the soil compacted over the filter fabric. Silt fences shall be removed upon approval by the Contracting Officer.

3.2 INSTALLATION OF EROSION CONTROL BLANKETS

Erosion control blankets shall be installed in accordance with the project plans and details, or as directed by the Contracting Officer in accordance with the manufacturer's instructions.

The Contractor shall coordinate with the blanket supplier for a qualified representative of the blanket supplier to be present at the job site at the start of installation to provide technical assistance as needed.

3.2.1 Slope Installations

Erosion control blankets shall be oriented in vertical strips and anchored with 6 inch long staples in cohesive soil and 8 inch long staples in non-cohesive soil. A 2 inch overlap, or as required by the manufacturer, shall be required for side seams. The distribution of staples shall be as recommended by the manufacturer. A 6 inch by 6 inch wide trench shall be located at the top of the slope. The erosion control blankets shall be stapled to the bottom of the trench.

3.2.2 Channel Installations

For channel installations, erosion control blankets shall be installed parallel to the flow of water. The first blanket shall be centered longitudinally in mid channel and anchored with staples, as recommended by the manufacturer. Subsequent blankets shall follow from channel center outward.

The distribution of staples shall be as recommended by the manufacturer.

Successive lengths of erosion control blankets shall be overlapped sufficiently for a common row of staples with the upstream end on top. Staple the overlap across the end of the overlapping lengths.

A 6 inch deep by 6 inch wide trench shall be located at the upstream termination of the blankets. The erosion control blankets shall be stapled to the bottom of the trench. The trench shall be backfilled and compacted.

3.3 INSTALLATION OF EROSION CONTROL ROLLS

Stakes shall be located every 2 feet to secure the logs. Each stake shall be intertwined with the netting on the downstream side of the log and driven approximately 2 feet into the ground. Soil shall be tamped against the upstream side of the roll to assure that storm water is forced to flow through the log rather than under it.

3.4 MAINTENANCE

The Contractor shall maintain the temporary and permanent vegetation, erosion and sediment control measures, and other protective measures in good and effective operating condition by performing routine inspections to determine condition and effectiveness, by restoration of destroyed vegetative cover, and by repair of erosion and sediment control measures

and other protective measures. The following procedures shall be followed to maintain the protective measures.

3.4.1 Silt Fence Maintenance

Silt fences shall be inspected in accordance with paragraph INSPECTIONS. Any required repairs shall be made promptly. Close attention shall be paid to the repair of damaged silt fence resulting from end runs and undercutting. Should the fabric on a silt fence decompose or become ineffective, and the barrier is still necessary, the fabric shall be replaced promptly. Sediment deposits shall be removed when deposits reach one-third of the height of the barrier. When a silt fence is no longer required, it shall be removed. The immediate area occupied by the fence and any sediment deposits shall be shaped to an acceptable grade.

3.5 INSPECTIONS

3.5.1 General

Inspections of all Storm water pollution control devices on the project shall be performed by Contractor on a monthly basis and following each rainfall of 1/2 inch or more in a 24-hour period at the project site as required under provisions of the NPDES General Permit for Arizona. Contractor shall prepare reports on such inspections and retain the reports for a period of three years following the completion of the project.. Additionally, Contractor shall maintain all Storm water pollution control devices on the project in proper working order, which shall include cleaning and/or repair during the duration of the project.

3.5.2 Inspections Details

Disturbed areas shall be inspected for evidence of, or the potential for, pollutants entering the drainage system. Erosion and sediment control measures identified in the Storm Water Pollution Prevention Plan shall be observed to ensure that they are operating correctly. Discharge locations or points shall be inspected to ascertain whether erosion control measures are effective in preventing significant impacts to receiving waters. Locations where vehicles exit the site shall be inspected for evidence of offsite sediment tracking.

3.5.3 Inspection Reports

For each inspection conducted, the Contractor shall prepare a report summarizing the scope of the inspection, name(s) and qualifications of personnel making the inspection, the date(s) of the inspection, major observations relating to the implementation of the Storm Water Pollution Prevention Plan, maintenance performed, and actions taken. The report shall be furnished to the Contracting Officer within 24 hours of the inspection as a part of the Contractor's daily CQC REPORT. A copy of the inspection report shall be maintained on the job site.

3.6 CONTRACTOR WARRANTS

Contractor warrants that its employees and Subcontractors of any tier and

their employees shall at all times comply with all applicable laws, ordinances, statutes, rules and regulations set forth by all federal, state and local governments and the Environmental Protection Agency in connection with NPDES Permitting requirements and laws and regulations pertaining to air, groundwater and surface water quality.

Contractor warrants that all storage of pesticides, fertilizers, herbicides and their application shall be consistent with the Best Management Plan as set forth in the City of Phoenix NPDES Permit No. AZ0024554, a copy of which is available for review at the Phoenix Area Office, 3636 N. Central Ave., #740, Phoenix, AZ 85012-1936, Telephone (602) 640-2021, Ext. 272.

Fines and penalties imposed by the EPA against Contracting Officer or the Contractor for Contractor's failure to comply with any of the requirements of NPDES General Permit of Arizona shall be borne by the Contractor.

Upon project completion, acceptance and demobilization, Contractor shall submit its completed, duly executed NOT form to the EPA, with a copy to the Arizona Department of Environmental Quality at the address listed in Section (C) above, thereby terminating all NPDES permit coverage for the project. Contractor shall then surrender to Contracting Officer copies of the SWPPP, inspection information and all other documents prepared and maintained by the Contractor in compliance of the NPDES General Permit. Contractor shall retain the originals of such documents for a period of three (3) years following the completion of the project.

Copies of all required forms and guidance for preparing the SWPPP are available in the "Drainage Design Manual for Maricopa County, Volume III Erosion Control." The manual is available at the Flood Control District, 2801 West Durango Street, Phoenix, Arizona 85009.

-- End of Section --

SECTION TABLE OF CONTENTS

DIVISION 01 - GENERAL REQUIREMENTS

SECTION 01420

SOURCES FOR REFERENCE PUBLICATIONS

PART 1 GENERAL

1.1 REFERENCES
1.2 ORDERING INFORMATION

-- End of Section Table of Contents --

SECTION 01420

SOURCES FOR REFERENCE PUBLICATIONS

PART 1 GENERAL

1.1 REFERENCES

Various publications are referenced in other sections of the specifications to establish requirements for the work. These references are identified in each section by document number, date and title. The document number used in the citation is the number assigned by the standards producing organization, (e.g. ASTM B 564 Nickel Alloy Forgings). However, when the standards producing organization has not assigned a number to a document, an identifying number has been assigned for reference purposes.

1.2 ORDERING INFORMATION

The addresses of the standards publishing organizations whose documents are referenced in other sections of these specifications are listed below, and if the source of the publications is different from the address of the sponsoring organization, that information is also provided. Documents listed in the specifications with numbers which were not assigned by the standards producing organization should be ordered from the source by title rather than by number. The designations "AOK" and "LOK" are for administrative purposes and should not be used when ordering publications.

ACI INTERNATIONAL (ACI)
P.O. Box 9094
Farmington Hills, MI 48333-9094
Ph: 248-848-3700
Fax: 248-848-3701
Internet: http://www.aci-int.org
AOK 5/01
LOK 2/01

ALUMINUM ASSOCIATION (AA)

900 19th Street N.W.
Washington, DC 20006
Ph: 202-862-5100
Fax: 202-862-5164
Internet: http://www.aluminum.org
AOK 5/01
LOK 2/01

AMERICAN ASSOCIATION OF STATE HIGHWAY AND TRANSPORTATION OFFICIALS (AASHTO)
444 N. Capital St., NW, Suite 249
Washington, DC 20001

Ph: 800-231-3475 202-624-5800
Fax: 800-525-5562 202-624-5806
Internet: http://www.transportation.org
AOK 5/01
LOK 2/01

AMERICAN CONFERENCE OF GOVERNMENTAL INDUSTRIAL HYGIENISTS (ACGIH)
1330 Kemper Meadow Dr.
Suite 600
Cincinnati, OH 45240
Ph: 513-742-2020
Fax: 513-742-3355
Internet: http://www.acgih.org
E-mail: pubs@acgih.org
AOK 5/01
LOK 2/01

AMERICAN INSTITUTE OF STEEL CONSTRUCTION (AISC)
One East Wacker Dr., Suite 3100
Chicago, IL 60601-2001
Ph: 312-670-2400
Publications: 800-644-2400
Fax: 312-670-5403
Internet: http://www.aisc.org
AOK 5/01
LOK 3/01

AMERICAN NATIONAL STANDARDS INSTITUTE (ANSI)
1819 L Street, NW, 6th Floor
Washington, DC 20036
Ph: 202-293-8020
Fax: 202-293-9287
Internet: http://www.ansi.org/

Note --- Documents beginning with the letter "S" can be ordered from:

Acoustical Society of America
Standards and Publications Fulfillment Center
P. O. Box 1020
Sewickley, PA 15143-9998
Ph: 412-741-1979
Fax: 412-741-0609
Internet: http://asa.aip.org
General e-mail: asa@aip.org
Publications e-mail: asapubs@abdintl.com
AOK 5/01
LOK 6/00

AMERICAN WATER WORKS ASSOCIATION(AWWA)
6666 West Quincy
Denver, CO 80235
Ph: 800-926-7337 - 303-794-7711
Fax: 303-794-7310

Internet: http://www.awwa.org
AOK 5/01
LOK 3/01

AMERICAN WELDING SOCIETY (AWS)
550 N.W. LeJeune Road
Miami, FL 33126
Ph: 800-443-9353 - 305-443-9353
Fax: 305-443-7559
Internet: http://www.amweld.org
AOK 5/01
LOK 3/01

ASME INTERNATIONAL (ASME)
Three Park Avenue
New York, NY 10016-5990
Ph: 212-591-7722
Fax: 212-591-7674
Internet: http://www.asme.org
AOK 5/01
LOK 6/00

ASPHALT INSTITUTE (AI)
Research Park Dr.
P.O. Box 14052
Lexington, KY 40512-4052
Ph: 859-288-4960
Fax: 859-288-4999
Internet: http://www.asphaltinstitute.org
AOK 5/01
LOK 6/00

CONCRETE REINFORCING STEEL INSTITUTE (CRSI)
933 N. Plum Grove Rd.
Schaumburg, IL 60173-4758
Ph: 847-517-1200
Fax: 847-517-1206
Internet: http://www.crsi.org/
AOK 5/01
LOK 6/00

ILLUMINATING ENGINEERING SOCIETY OF NORTH AMERICA (IESNA)
120 Wall St., 17th Floor
New York, NY 10005-4001
Ph: 212-248-5000
Fax: 212-248-5017
Internet: http://www.iesna.org
AOK 5/01
LOK 6/00

INSTITUTE OF ELECTRICAL AND ELECTRONICS ENGINEERS (IEEE)
445 Hoes Ln, P. O. Box 1331
Piscataway, NJ 08855-1331
Ph: 732-981-0060 OR 800-701-4333

Fax: 732-981-9667
Internet: http://www.ieee.org
E-mail: customer.services@ieee.org
AOK 5/01
LOK 6/00

INTERNATIONAL CONFERENCE OF BUILDING OFFICIALS (ICBO)
5360 Workman Mill Rd.
Whittier, CA 90601-2298
Ph: 800-284-4406
Ph: 562-699-0541
Fax: 562-692-3853
Internet: http://www.icbo.org
AOK 5/01
LOK 6/00

INTERNATIONAL ELECTRICAL TESTING ASSOCIATION (NETA)

P.O. Box 687
106 Stone Street
Morrison, Colorado 80465
PH: 303-697-8441
FAX: 303-697-8431
Internet: http://www.netaworld.org
AOK 6/01

INTERNATIONAL ELECTROTECHNICAL COMMISSION (IEC)
3, rue de Varembe, P.O. Box 131
CH-1211 Geneva 20, Switzerland
Ph: 41-22-919-0211
Fax: 41-22-919-0300
Internet: http://www.iec.ch
e-mail: info@iec.ch
AOK 5/01
LOK 6/00

MANUFACTURERS STANDARDIZATION SOCIETY OF THE VALVE AND FITTINGS INDUSTRY (MSS)
127 Park St., NE
Vienna, VA 22180-4602
Ph: 703-281-6613
Fax: 703-281-6671
Internet: htp://www.mss-hq.com
e-mail: info@mss-hq.com
AOK 5/01
LOK 6/00

MASTER PAINTERS INSTITUTE (MPI)
4090 Graveley Street
Burnaby, BC CANADA V5C 3T6
PH: 888-674-8937
Fx: 888-211-8708
Internet: http://www.paintinfo.com/mpi
AOK 9/01

LOK 0/00

NATIONAL ELECTRICAL MANUFACTURERS ASSOCIATION (NEMA)
1300 N. 17th St., Suite 1847
Rosslyn, VA 22209
Ph: 703-841-3200
Fax: 703-841-3300
Internet: http://www.nema.org/
AOK 5/01
LOK 6/00

NATIONAL FIRE PROTECTION ASSOCIATION (NFPA)
1 Batterymarch Park
P.O. Box 9101
Quincy, MA 02269-9101
Ph: 617-770-3000
Fax: 617-770-0700
Internet: http://www.nfpa.org
AOK 5/01
LOK 8/00

NATIONAL INSTITUTE OF STANDARDS AND TECHNOLOGY (NIST)
100 Bureau Drive
Stop 3460
Gaithersburg, MD 20899-3460
Ph: 301-975-NIST
Internet: http://www.nist.gov
Order Publications From:
Superintendent of Documents
U.S. Government Printing Office
732 North Capitol Street, NW
Mailstop: SDE
Washington, DC 20401
Ph: 202-512-1530
Fax: 202-512-1262
Internet: http://www.gpo.gov
or
National Technical Information Services (NTIS)
5285 Port Royal Rd.
Springfield, VA 22161
Ph: 703-605-6000
Fax: 703-605-6900
Internet: http://www.ntis.gov
AOK 5/01
LOK 6/00

PRECAST/PRESTRESSED CONCRETE INSTITUTE (PCI)
209 West Jackson Blvd.
Chicago, IL 60606-6938
Ph: 312-786-0300
Fax: 312-786-0353
Internet: http://www.pci.org
e-mail: info@pci.org
AOK 5/01

LOK 6/00

SCIENTIFIC CERTIFICATION SYSTEMS (SCS)

1939 Harrison Street, Suite 400
Oakland, CA 94612
Ph: 510-832-1415
FAX: 510-832-0359
Internet: http://www.scs1.org
AOK 11/01
LOK

THE SOCIETY FOR PROTECTIVE COATINGS (SSPC)
40 24th Street, 6th Floor
Pittsburgh, PA 15222-4656
Ph: 412-281-2331
Fax: 412-281-9992
Internet: http://www.sspc.org
AOK 5/01
LOK 6/00

UNDERWRITERS LABORATORIES (UL)
333 Pfingsten Rd.
Northbrook, IL 60062-2096
Ph: 847-272-8800
Fax: 847-272-8129
Internet: http://www.ul.com/
e-mail: northbrook@us.ul.com
AOK 5/01
LOK 6/00

U.S. ARMY CORPS OF ENGINEERS (USACE)

Order CRD-C DOCUMENTS from:
U.S. Army Engineer Waterways Experiment Station
ATTN: Technical Report Distribution Section, Services
Branch, TIC
3909 Halls Ferry Rd.
Vicksburg, MS 39180-6199
Ph: 601-634-2664
Fax: 601-634-2388
Internet: http://www.wes.army.mil/SL/MTC/handbook/handbook.htm

Order Other Documents from:
USACE Publications Depot
Attn: CEIM-SP-D
2803 52nd Avenue
Hyattsville, MD 20781-1102
Ph: 301-394-0081
Fax: 301-394-0084
Internet: http://www.usace.army.mil/publications
or http://www.hnd.usace.army.mil/techinfo/index.htm
AOK 5/01
LOK 6/00

U.S. DEPARTMENT OF COMMERCE (DOC)

Order Publications From:
National Technical Information Service
5285 Port Royal Road
Springfield, VA 22161
Ph: 703-605-6000
Fax: 703-605-6900
Internet: http://www.ntis.gov
AOK 5/01
LOK 6/00

U.S. DEPARTMENT OF DEFENSE (DOD)

Order DOD Documents from:
National Technical Information Service
5285 Port Royal Road
Springfield, VA 22161
Ph: 703-605-6000
FAX: 703-605-6900
Internet: http://www.ntis.gov

Order Military Specifications, Standards and Related Publications from:
Department of Defense Single Stock Point for (DODSSP)
Defense Automation and Production Service (DAPS)
Bldg 4D
700 Robbins AV
Philadelphia, PA 19111-5094
Ph: 215-697-2179
Fax: 215-697-1462
Internet: http://www.dodssp.daps.mil
AOK 5/01
LOK 6/00

U.S. GENERAL SERVICES ADMINISTRATION (GSA)

Order from:
General Services Administration
Federal Supply Service Bureau
470 E L'Enfant Plaza, S.W., Suite 8100
Washington, DC 20407
Ph: 202-619-8925
Fx: 202-619-8978
Internet: http://www.fss.gsa.gov/pub/fed-specs.cfm
AOK 5/01
LOK 6/00

U.S. NATIONAL ARCHIVES AND RECORDS ADMINISTRATION (NARA)
700 Pennsylvania Avenue, N.W.
Washington, D.C. 20408
Phone: 800-234-8861
Internet: http://www.nara.gov

Order documents from:
Superintendent of Documents
U.S.Government Printing Office
732 North Capitol Street, NW
Washington, DC 20401
Mailstop: SDE
Ph: 202-512-1530
Fax: 202-512-1262
Internet: http://www.gpo.gov
E-mail: gpoaccess@gpo.gov
AOK 5/01

WESTERN WOOD PRODUCTS ASSOCIATION (WWPA)
Yeon Bldg.
522 SW 5th Ave.
Suite 500
Portland, OR 97204-2122
Ph: 503-224-3930
Fax: 503-224-3934
Internet: http://www.wwpa.org
e-mail: info@wwpa.org
AOK 5/01
LOK 6/00

WINDOW AND DOOR MANUFACTURERS ASSOCIATION (WDMA)
1400 East Touhy Ave., Suite 470
Des Plaines, IL 60018
Ph: 847-299-5200 or 800-223-2301
Fax: 708-299-1286
Internet: http://www.wdma.com
e-mail: admin@wdma.com
AOK 5/01
LOK 6/00

WOOD MOULDING AND MILLWORK PRODUCERS ASSOCIATION (WMMPA)
507 First Street
Woodland, CA 95695
Ph: 916-661-9591
Fax: 916-661-9586
Internet: http://www.wmmpa.com
AOK 5/01
LOK 6/00

-- End of Section --

SECTION TABLE OF CONTENTS

DIVISION 01 - GENERAL REQUIREMENTS

SECTION 01451

CONTRACTOR QUALITY CONTROL

PART 1 GENERAL

1.1 REFERENCES
1.2 PAYMENT

PART 2 PRODUCTS (Not Applicable)

PART 3 EXECUTION

3.1 GENERAL REQUIREMENTS
3.2 QUALITY CONTROL PLAN
3.2.1 Content of the CQC Plan
3.2.2 Acceptance of Plan
3.2.3 Notification of Changes
3.3 COORDINATION MEETING
3.4 QUALITY CONTROL ORGANIZATION
3.4.1 Personnel Requirements
3.4.2 CQC System Manager
3.4.3 CQC Personnel
3.4.4 Additional Requirement
3.4.5 Organizational Changes
3.5 SUBMITTALS AND DELIVERABLES
3.6 CONTROL
3.6.1 Preparatory Phase
3.6.2 Initial Phase
3.6.3 Follow-up Phase
3.6.4 Additional Preparatory and Initial Phases
3.7 TESTS
3.7.1 Testing Procedure
3.7.2 Testing Laboratories
3.7.2.1 Capability Check
3.7.2.2 Capability Recheck
3.7.3 On site Laboratory
3.7.4 Furnishing or Transportation of Samples for Testing
3.8 COMPLETION INSPECTION
3.8.1 Punch-Out Inspection
3.8.2 Pre-Final Inspection
3.8.3 Final Acceptance Inspection
3.9 DOCUMENTATION
3.10 NOTIFICATION OF NONCOMPLIANCE

-- End of Section Table of Contents --

SECTION 01451

CONTRACTOR QUALITY CONTROL

PART 1 GENERAL

1.1 REFERENCES

The publications listed below form a part of this specification to the extent referenced. The publications are referred to in the text by basic designation only.

ASTM INTERNATIONAL (ASTM)

ASTM D 3740	(2001) Minimum Requirements for Agencies Engaged in the Testing and/or Inspection of Soil and Rock as Used in Engineering Design and Construction
ASTM E 329	(2000b) Agencies Engaged in the Testing and/or Inspection of Materials Used in Construction

1.2 PAYMENT

Separate payment will not be made for providing and maintaining an effective Quality Control program, and all costs associated therewith shall be included in the applicable unit prices or lump-sum prices contained in the Bidding Schedule.

PART 2 PRODUCTS (Not Applicable)

PART 3 EXECUTION

3.1 GENERAL REQUIREMENTS

The Contractor is responsible for quality control and shall establish and maintain an effective quality control system in compliance with the Contract Clause titled "Inspection of Construction." The quality control system shall consist of plans, procedures, and organization necessary to produce an end product which complies with the contract requirements. The system shall cover all construction operations, both on site and offsite, and shall be keyed to the proposed construction sequence. The site project QC Manager will be held responsible for the quality of work on the job and is subject to removal by the Contracting Officer for non-compliance with the quality requirements specified in the contract. The site project superintendent in this context shall be the highest level manager responsible for the overall construction activities at the site, including quality and production. The site project superintendent shall maintain a physical presence at the site at all times, except as otherwise acceptable

to the Contracting Officer, and shall be responsible for all construction and construction related activities at the site.

3.2 QUALITY CONTROL PLAN

The Contractor shall furnish for review by the Government, not later than 10 days after receipt of notice to proceed, the Contractor Quality Control (CQC) Plan proposed to implement the requirements of the Contract Clause titled "Inspection of Construction." The plan shall identify personnel, procedures, control, instructions, tests, records, and forms to be used. The Government will consider an interim plan for the first 30 days of operation. Construction will be permitted to begin only after acceptance of the CQC Plan or acceptance of an interim plan applicable to the particular feature of work to be started. Work outside of the features of work included in an accepted interim plan will not be permitted to begin until acceptance of a CQC Plan or another interim plan containing the additional features of work to be started.

3.2.1 Content of the CQC Plan

The CQC Plan shall include, as a minimum, the following to cover all construction operations, both on site and offsite, including work by subcontractors, fabricators, suppliers, and purchasing agents:

a. A description of the quality control organization, including a chart showing lines of authority and acknowledgment that the CQC staff shall implement the three phase control system for all aspects of the work specified.

b. The name, qualifications (in resume format), duties, responsibilities, and authorities of each person assigned a CQC function.

c. A copy of the letter to the CQC System Manager signed by an authorized official of the firm which describes the responsibilities and delegates sufficient authorities to adequately perform the functions of the CQC System Manager, including authority to stop work which is not in compliance with the contract. The CQC System Manager shall issue letters of direction to all other various quality control representatives outlining duties, authorities, and responsibilities. Copies of these letters shall also be furnished to the Government.

d. Procedures for scheduling, reviewing, certifying, and managing submittals, including those of subcontractors, offsite fabricators, suppliers, and purchasing agents. These procedures shall be in accordance with Section 01330 SUBMITTAL PROCEDURES.

e. Control, verification, and acceptance testing procedures for each specific test to include the test name, specification paragraph requiring test, feature of work to be tested, test frequency, and person responsible for each test. (Laboratory facilities will be approved by the Contracting Officer.)

f. Procedures for tracking preparatory, initial, and follow-up control phases and control, verification, and acceptance tests including documentation.

g. Procedures for tracking construction deficiencies from identification through acceptable corrective action. These procedures shall establish verification that identified deficiencies have been corrected.

h. Reporting procedures, including proposed reporting formats.

i. A list of the definable features of work. A definable feature of work is a task which is separate and distinct from other tasks, has separate control requirements, and may be identified by different trades or disciplines, or it may be work by the same trade in a different environment. Although each section of the specifications may generally be considered as a definable feature of work, there are frequently more than one definable features under a particular section. This list will be agreed upon during the coordination meeting.

3.2.2 Acceptance of Plan

Acceptance of the Contractor's plan is required prior to the start of construction. Acceptance is conditional and will be predicated on satisfactory performance during the construction. The Government reserves the right to require the Contractor to make changes in his CQC Plan and operations including removal of personnel, as necessary, to obtain the quality specified.

3.2.3 Notification of Changes

After acceptance of the CQC Plan, the Contractor shall notify the Contracting Officer in writing of any proposed change. Proposed changes are subject to acceptance by the Contracting Officer.

3.3 COORDINATION MEETING

After the Preconstruction Conference, before start of construction, and prior to acceptance by the Government of the CQC Plan, the Contractor shall meet with the Contracting Officer or Authorized Representative and discuss the Contractor's quality control system. The CQC Plan shall be submitted for review a minimum of 10 calendar days prior to the Coordination Meeting. During the meeting, a mutual understanding of the system details shall be developed, including the forms for recording the CQC operations, control activities, testing, administration of the system for both on site and offsite work, and the interrelationship of Contractor's Management and control with the Government's Quality Assurance. Minutes of the meeting shall be prepared by the Government and signed by both the Contractor and the Contracting Officer. The minutes shall become a part of the contract file. There may be occasions when subsequent conferences will be called by either party to reconfirm mutual understandings and/or address deficiencies in the CQC system or procedures which may require corrective action by the Contractor.

3.4 QUALITY CONTROL ORGANIZATION

3.4.1 Personnel Requirements

The requirements for the CQC organization are a CQC System Manager and sufficient number of additional qualified personnel to ensure safety and contract compliance. The Safety and Health Manager shall receive direction and authority from the CQC System Manager and shall serve as a member of the CQC staff. Personnel identified in the technical provisions as requiring specialized skills to assure the required work is being performed properly will also be included as part of the CQC organization. The Contractor's CQC staff shall maintain a presence at the site at all times during progress of the work and have complete authority and responsibility to take any action necessary to ensure contract compliance. The CQC staff shall be subject to acceptance by the Contracting Officer. The Contractor shall provide adequate office space, filing systems and other resources as necessary to maintain an effective and fully functional CQC organization. Complete records of all letters, material submittals, show drawing submittals, schedules and all other project documentation shall be promptly furnished to the CQC organization by the Contractor. The CQC organization shall be responsible to maintain these documents and records at the site at all times, except as otherwise acceptable to the Contracting Officer.

3.4.2 CQC System Manager

The Contractor shall identify as CQC System Manager an individual within the on site work organization who shall be responsible for overall management of CQC and have the authority to act in all CQC matters for the Contractor. The CQC System Manager shall be a person with a minimum of 15 years construction experience on construction similar to this contract. This CQC System Manager shall be on the site at all times during construction and shall be employed by the prime Contractor. The CQC System Manager shall be dedicated to CQC and have no other responsibilities or other duties. An alternate for the CQC System Manager shall be identified in the plan to serve in the event of the System Manager's absence. The requirements for the alternate shall be the same as for the designated CQC System Manager.

3.4.3 CQC Personnel

In addition to CQC personnel specified elsewhere in the contract, the Contractor shall provide as part of the CQC organization specialized personnel to assist the CQC System Manager for the following areas: civil, structural, environmental, and materials technician. These individuals may be employees of the prime or subcontractor; be responsible to the CQC System Manager; be physically present at the construction site during work on their areas of responsibility; have the necessary education and/or experience in accordance with the experience matrix listed herein. These individuals may perform other duties but must be allowed sufficient time to perform their assigned quality control duties as described in the Quality Control Plan.

Experience Matrix

	Area	Qualifications
a.	Civil	Graduate Civil Engineer with 2 years experience in the type of work being performed on this project or technician with 5 yrs related experience
b.	Structural	Graduate Structural Engineer with 2 yrs experience or person with 5 yrs related experience
c.	Environmental	Graduate Environmental Engineer with 3 yrs experience

3.4.4 Additional Requirement

In addition to the above experience and education requirements the CQC System Manager shall have completed the course entitled "Construction Quality Management For Contractors".

3.4.5 Organizational Changes

The Contractor shall maintain the CQC staff at full strength at all times. When it is necessary to make changes to the CQC staff, the Contractor shall revise the CQC Plan to reflect the changes and submit the changes to the Contracting Officer for acceptance.

3.5 SUBMITTALS AND DELIVERABLES

Submittals, if needed, shall be made as specified in Section 01330 SUBMITTAL PROCEDURES. The CQC organization shall be responsible for certifying that all submittals and deliverables are in compliance with the contract requirements.

3.6 CONTROL

Contractor Quality Control is the means by which the Contractor ensures that the construction, to include that of subcontractors and suppliers, complies with the requirements of the contract. At least three phases of control shall be conducted by the CQC System Manager for each definable feature of work as follows:

3.6.1 Preparatory Phase

This phase shall be performed prior to beginning work on each definable feature of work, after all required plans/documents/materials are approved/accepted, and after copies are at the work site. This phase shall include:

a. A review of each paragraph of applicable specifications, reference codes, and standards. A copy of those sections of referenced codes and standards applicable to that portion of the work to be accomplished in the field shall be made available by the Contractor at the preparatory inspection. These copies shall be maintained in the field and available for use by Government personnel until final acceptance of the work.

b. A review of the contract Drawings.

c. A check to assure that all materials and/or equipment have been tested, submitted, and approved.

d. Review of provisions that have been made to provide required control inspection and testing.

e. Examination of the work area to assure that all required preliminary work has been completed and is in compliance with the contract.

f. A physical examination of required materials, equipment, and sample work to assure that they are on hand, conform to approved shop Drawings or submitted data, and are properly stored.

g. Discussion of procedures for controlling quality of the work including repetitive deficiencies. Document construction tolerances and workmanship standards for that feature of work.

h. A check to ensure that the portion of the plan for the work to be performed has been accepted by the Contracting Officer.

i. Discussion of the initial control phase.

j. The Government shall be notified at least 48 hours in advance of beginning the preparatory control phase. This phase shall include a meeting conducted by the CQC System Manager and attended by the superintendent, other CQC personnel (as applicable), and the foreman responsible for the definable feature. The results of the preparatory phase actions shall be documented by separate minutes prepared by the CQC System Manager and attached to the daily CQC report. The Contractor shall instruct applicable workers as to the acceptable level of workmanship required in order to meet contract specifications.

3.6.2 Initial Phase

This phase shall be accomplished at the beginning of a definable feature of work. The following shall be accomplished:

a. A check of work to ensure that it is in full compliance with contract requirements. Review minutes of the preparatory meeting.

b. Verify adequacy of controls to ensure full contract compliance.

Verify required control inspection and testing.

c. Establish level of workmanship and verify that it meets minimum acceptable workmanship standards. Compare with required sample panels as appropriate.

d. Resolve all differences.

e. Check safety to include compliance with and upgrading of the safety plan and activity hazard analysis. Review the activity analysis with each worker.

f. The Government shall be notified at least 48 hours in advance of beginning the initial phase. Separate minutes of this phase shall be prepared by the CQC System Manager and attached to the daily CQC report. Exact location of initial phase shall be indicated for future reference and comparison with follow-up phases.

g. The initial phase should be repeated for each new crew to work on site, or any time acceptable specified quality standards are not being met.

3.6.3 Follow-up Phase

Daily checks shall be performed to assure control activities, including control testing, are providing continued compliance with contract requirements, until completion of the particular feature of work. The checks shall be made a matter of record in the CQC documentation. Final follow-up checks shall be conducted and all deficiencies corrected prior to the start of additional features of work which may be affected by the deficient work. The Contractor shall not build upon nor conceal non-conforming work.

3.6.4 Additional Preparatory and Initial Phases

Additional preparatory and initial phases shall be conducted on the same definable features of work if: the quality of on-going work is unacceptable; if there are changes in the applicable CQC staff, on site production supervision or work crew; if work on a definable feature is resumed after a substantial period of inactivity; or if other problems develop.

3.7 TESTS

3.7.1 Testing Procedure

The Contractor shall perform specified or required tests to verify that control measures are adequate to provide a product which conforms to contract requirements. Upon request, the Contractor shall furnish to the Government duplicate samples of test specimens for possible testing by the Government. Testing includes operation and/or acceptance tests when specified. The Contractor shall procure the services of a Corps of Engineers approved testing laboratory or establish an approved testing laboratory at the project site. The Contractor shall perform the following

activities and record and provide the following data:

a. Verify that testing procedures comply with contract requirements.

b. Verify that facilities and testing equipment are available and comply with testing standards.

c. Check test instrument calibration data against certified standards.

d. Verify that recording forms and test identification control number system, including all of the test documentation requirements, have been prepared.

e. Results of all tests taken, both passing and failing tests, shall be recorded on the CQC report for the date taken. Specification paragraph reference, location where tests were taken, and the sequential control number identifying the test shall be given. If approved by the Contracting Officer, actual test reports may be submitted later with a reference to the test number and date taken. An information copy of tests performed by an offsite or commercial test facility shall be provided directly to the Contracting Officer. Failure to submit timely test reports as stated may result in nonpayment for related work performed and disapproval of the test facility for this contract.

3.7.2 Testing Laboratories

3.7.2.1 Capability Check

The Government reserves the right to check laboratory equipment in the proposed laboratory for compliance with the standards set forth in the contract specifications and to check the laboratory technician's testing procedures and techniques. Laboratories utilized for testing soils, concrete, asphalt, and steel shall meet criteria detailed in ASTM D 3740 and ASTM E 329.

3.7.2.2 Capability Recheck

If the selected laboratory fails the capability check, the Contractor will be assessed a charge of $500.00 to reimburse the Government for each succeeding recheck of the laboratory or the checking of a subsequently selected laboratory. Such costs will be deducted from the contract amount due the Contractor.

3.7.3 On site Laboratory

The Government reserves the right to utilize the Contractor's control testing laboratory and equipment to make assurance tests, and to check the Contractor's testing procedures, techniques, and test results at no additional cost to the Government.

3.7.4 Furnishing or Transportation of Samples for Testing

Costs incidental to the transportation of samples or materials shall be

borne by the Contractor. Samples of materials for test verification and acceptance testing by the Government shall be delivered to a quality assurance laboratory, at an address to be determined.

Coordination for each specific test, exact delivery location, and dates will be made through the Area Office.

3.8 COMPLETION INSPECTION

3.8.1 Punch-Out Inspection

Near the end of the work, or any increment of the work established by a time stated in the Special Clause, "Commencement, Prosecution, and Completion of Work", or by the specifications, the CQC Manager shall conduct an inspection of the work. A punch list of items which do not conform to the approved Drawings and specifications shall be prepared and included in the CQC documentation, as required by paragraph DOCUMENTATION. The list of deficiencies shall include the estimated date by which the deficiencies will be corrected. The CQC System Manager or staff shall make a second inspection to ascertain that all deficiencies have been corrected. Once this is accomplished, the Contractor shall notify the Government that the facility is ready for the Government Pre-Final inspection.

3.8.2 Pre-Final Inspection

The Government will perform the pre-final inspection to verify that the facility is complete and ready to be occupied. A Government Pre-Final Punch List may be developed as a result of this inspection. The Contractor's CQC System Manager shall ensure that all items on this list have been corrected before notifying the Government, so that a Final inspection with the customer can be scheduled. Any items noted on the Pre-Final inspection shall be corrected in a timely manner. These inspections and any deficiency corrections required by this paragraph shall be accomplished within the time slated for completion of the entire work or any particular increment of the work if the project is divided into increments by separate completion dates.

3.8.3 Final Acceptance Inspection

The Contractor's Quality Control Inspection personnel, plus the superintendent or other primary management person, and the Contracting Officer shall be in attendance at the final acceptance inspection. The final acceptance inspection will be formally scheduled by the Contracting Officer based upon results of the Pre-Final inspection. Notice shall be given to the Contracting Officer at least 14 days prior to the final acceptance inspection and shall include the Contractor's assurance that all specific items previously identified to the Contractor as being unacceptable, along with all remaining work performed under the contract, will be complete and acceptable by the date scheduled for the final acceptance inspection. Failure of the Contractor to have all contract work acceptably complete for this inspection will be cause for the Contracting Officer to bill the Contractor for the Government's additional inspection cost in accordance with the contract clause titled "Inspection of Construction".

3.9 DOCUMENTATION

The Contractor shall maintain current records providing factual evidence that required quality control activities and/or tests have been performed. These records shall include the work of subcontractors and suppliers and shall be on an acceptable form that includes, as a minimum, the following information:

a. Contractor/subcontractor and their area of responsibility.

b. Operating plant/equipment with hours worked, idle, or down for repair.

c. Work performed each day, giving location, description, and by whom. When Network Analysis (NAS) is used, identify each phase of work performed each day by NAS activity number.

d. Test and/or control activities performed with results and references to Specifications/Drawings requirements. The control phase shall be identified (Preparatory, Initial, Follow-up). List of deficiencies noted, along with corrective action.

e. Quantity of materials received at the site with statement as to acceptability, storage, and reference to Specifications/Drawings requirements.

f. Submittals and deliverables reviewed, with contract reference, by whom, and action taken.

g. Offsite surveillance activities, including actions taken.

h. Job safety evaluations stating what was checked, results, and instructions or corrective actions.

i. Instructions given/received and conflicts in Drawings and/or specifications.

j. Contractor's verification statement.

These records shall indicate a description of trades working on the project; the number of personnel working; weather conditions encountered; and any delays encountered. These records shall cover both conforming and deficient features and shall include a statement that equipment and materials incorporated in the work and workmanship comply with the contract. The original and one copy of these records in report form shall be furnished to the Government daily within 24 hours after the date covered by the report, except that reports need not be submitted for days on which no work is performed. As a minimum, one report shall be prepared and submitted for every 7 days of no work and on the last day of a no work period. All calendar days shall be accounted for throughout the life of the contract. The first report following a day of no work shall be for that day only. Reports shall be signed and dated by the CQC System Manager. The report from the CQC System Manager shall include copies of

test reports and copies of reports prepared by all subordinate quality control personnel.

3.10 NOTIFICATION OF NONCOMPLIANCE

The Contracting Officer will notify the Contractor of any detected noncompliance with the foregoing requirements. The Contractor shall take immediate corrective action after receipt of such notice. Such notice, when delivered to the Contractor at the work site, shall be deemed sufficient for the purpose of notification. If the Contractor fails or refuses to comply promptly, the Contracting Officer may issue an order stopping all or part of the work until satisfactory corrective action has been taken. No part of the time lost due to such stop orders shall be made the subject of claim for extension of time or for excess costs or damages by the Contractor.

-- End of Section --

SECTION TABLE OF CONTENTS

DIVISION 02 - SITE WORK

SECTION 02230

CLEARING AND GRUBBING

PART 1 GENERAL

1.1 DEFINITIONS
1.1.1 Clearing
1.1.2 Grubbing
1.1.3 Stripping
1.2 SUBMITTALS
1.3 QUALITY ASSURANCE
1.4 SCHEDULING AND SEQUENCING
1.5 LICENSE REQUIREMENTS

PART 2 PRODUCTS

2.1 HERBICIDE FOR TREATMENT OF SALT CEDAR

PART 3 EXECUTION

3.1 GENERAL
3.2 LIMITS
3.2.1 Excavation Including Trenches
3.2.2 Fill
3.3 CLEARING
3.4 GRUBBING
3.5 STRIPPING
3.6 HERBICIDE FOR TREATMENT OF SALT CEDAR
3.6.1 Foliar Spraying
3.6.2 Cut Stump Treatment
3.7 DISPOSAL OF MATERIALS

-- End of Section Table of Contents --

SECTION 02230

CLEARING AND GRUBBING

PART 1 GENERAL

1.1 DEFINITIONS

1.1.1 Clearing

Clearing shall consist of the felling, trimming, and cutting of trees into sections and the satisfactory disposal of the trees and other vegetation designated for removal, including down timber, snags, brush, and rubbish occurring in the areas to be cleared.

1.1.2 Grubbing

Grubbing shall consist of the removal and disposal of stumps, roots larger than 3 inches in diameter, and matted roots from the designated grubbing areas.

1.1.3 Stripping

Stripping shall consist of the removal of topsoil after applicable grubbing is completed.

1.2 SUBMITTALS

Government approval is required for submittals with a "G" designation; submittals not having a "G" designation are for information only. When used, a designation following the "G" designation identifies the office that will review the submittal for the Government. The following shall be submitted in accordance with Section 01330 SUBMITTAL PROCEDURES:

SD-03 Product Data

Herbicide for Treatment of Salt Cedar

1.3 QUALITY ASSURANCE

Obtain Contracting Officer's approval of staked clearing, grubbing, and stripping limits, prior to commencing clearing, grubbing, and stripping.

1.4 SCHEDULING AND SEQUENCING

Prepare site only after adequate erosion and sediment controls are in place. Limit areas exposed uncontrolled to erosion during installation of temporary erosion and sediment controls, as required in Section 01356, STORM WATER POLLUTION PREVENTION MEASURES.

1.5 LICENSE REQUIREMENTS

The Contractor shall possess valid Pesticide Applicator License or shall employ a person who possesses a valid Pesticide Applicator License from the State of Arizona Structural Pest Control Commission within the appropriate use categories. Documentation of such certification may be required by the Contracting Officer. The appropriate pesticide application records will be kept daily and a copy furnished to the Contracting Officer.

PART 2 PRODUCTS

2.1 HERBICIDE FOR TREATMENT OF SALT CEDAR

The Contractor shall furnish all herbicide materials and application equipment. All herbicides used for Salt Cedar control shall be approved for use in and around Waters of the United States. Further all herbicides and their application shall be consistent with the Best Management Plan as set forth in the City of Phoenix NPDES Permit N0. AZ 0024554, a copy of which is available for review at the Phoenix Area Office of the USACE. Herbicides approved for this task shall be a mixture of imazapyr plus glyphosate 0.5+0.5% v/v plus 0.25% non-ionic surfactant or equivalent as approved by the Contracting Officer. Herbicide application equipment shall be in good repair and operating condition capable of applying herbicides at rates and methods as set forth on the pesticide container label and in a manner consistent with the Best Management Practices associated with the City of Phoenix NPDES Permit No. AZ 0024554.

PART 3 EXECUTION

3.1 GENERAL

Clear, grub and strip areas actually needed for site improvements within limits specified. Do not injure or deface vegetation that is not designated for removal.

3.2 LIMITS

As follows, but not to extend beyond project limits.

3.2.1 Excavation Including Trenches

Five (5) feet beyond top of cut slope or shored wall.

3.2.2 Fill

Five (5) feet beyond toe of permanent fill.

3.3 CLEARING

Trees, stumps, roots, brush, and other vegetation in areas to be cleared shall be cut off flush with or below the original ground surface, except such trees and vegetation as may be indicated or directed to be left standing. Trees and vegetation to be left standing shall be protected from damage incident to clearing, grubbing, and construction operations by the erection of barriers or by such other means as the circumstances require.

Vegetation to remain shall be protected as described in Section 01355, ENVIRONMENTAL PROTECTION.

3.4 GRUBBING

Material to be grubbed, together with logs and other organic or metallic debris not suitable for foundation purposes, shall be removed to a depth of not less than 18 inches below the original surface level of the ground in areas indicated to be grubbed and in areas indicated as construction areas under this contract, such as areas for buildings, and areas to be paved. Depressions made by grubbing shall be filled with suitable material and compacted to make the surface conform with the original adjacent surface of the ground. Grubbing for removal of Salt Cedar roots shall be to depth sufficient to remove entire root system or to 3 feet, whichever is less.

3.5 STRIPPING

Do not remove topsoil until after grubbing is completed. Strip areas within limits to minimum depth of 3 inches. Do not remove subsoil with topsoil. Stockpile strippings, meeting the requirements described in Section 02300, EARTHWORK. For topsoil, separate from other excavated material.

3.6 HERBICIDE FOR TREATMENT OF SALT CEDAR

3.6.1 Foliar Spraying

To control young Salt Cedar and regrowth of plants less than 15 feet tall in areas where mechanical removal or cut stump treatment is impractical or in areas previously root plowed, mowed, or cleared where Salt Cedar is beginning to invade. Application will be conducted by spraying the herbicide mixture on foliage to wet, but not to drip, making certain the terminal ends of branches are treated. Foliar spraying to control Salt Cedar shall not be conducted in areas where herbicide may drift or otherwise have incidental contact with foliage and harm existing desirable trees, shrubs, and or groundcover(s).

3.6.2 Cut Stump Treatment

To control Salt Cedar trees with stems 3 inches or greater in basal diameter located in areas where foliar spraying and/or root removal is impractical and may cause harm to existing vegetation, and in areas where grubbing for project features will not be conducted. Salt Cedar trees shall be cut parallel to the ground, not to exceed 2 inches above the ground line. Immediately after making the cut, apply approved herbicide to wet the area adjacent to the cambium and bark around the entire circumference and the sides of the stump. The sides of the stump should be thoroughly wetted down to the root collar, but not to the point of runoff. All cuttings from salt cedar trees shall be removed and disposed of off the project site in accordance with Paragraph 3.7 Disposal of Materials.

3.7 DISPOSAL OF MATERIALS

Logs, stumps, roots, brush, rotten wood, and other debris from the clearing

and grubbing operations, shall be removed from site and disposed at a licensed landfill as described in Section 01355, ENVIRONMENTAL PROTECTION.

Demolish and remove from site, fence, pavement and grubbing indicated on the Drawings. Conduct demolition activities in a manner as to not damage adjacent facilities to remain.

-- End of Section --

SECTION TABLE OF CONTENTS

DIVISION 02 - SITE WORK

SECTION 02300

EARTHWORK

PART 1 GENERAL

1.1 REFERENCES
1.2 DEFINITIONS
1.2.1 Satisfactory Materials
1.2.2 Unsatisfactory Materials
1.2.3 Cohesionless and Cohesive Materials
1.2.4 Degree of Compaction
1.2.5 Prepared Ground Surface
1.2.6 Completed Course
1.2.7 Lift
1.2.8 Geosynthetics
1.2.9 Well-Graded
1.2.10 Influence Area
1.2.11 Borrow Material
1.2.12 Imported Material
1.2.13 Waste
1.2.14 Topsoil
1.3 SUBMITTALS
1.4 SEQUENCE OF WORK
1.5 SUBSURFACE DATA
1.6 CLASSIFICATION OF EXCAVATION
1.7 BLASTING
1.8 UTILIZATION OF EXCAVATED MATERIALS
1.9 SOURCE INSPECTION
1.10 DELIVERY, INSPECTION, STORAGE, AND HANDLING
1.10.1 Delivery
1.10.1.1 Delivered Topsoil
1.10.1.2 Soil Amendments
1.10.2 Inspection
1.10.3 Storage
1.10.4 Handling

PART 2 PRODUCTS

2.1 EARTHFILL
2.2 STRUCTURAL FILL
2.3 PROTECTIVE FILL FOR GEOMEMBRANE LININGS
2.4 GRANULAR DRAIN MATERIAL
2.5 GRANULAR FILTER MATERIAL
2.6 WATER FOR MOISTURE CONDITIONING
2.7 BASE COURSE ROCK
2.8 FOUNDATION STABILIZATION ROCK
2.9 RIVER ROCK
2.10 AGGREGATE RIPRAP BEDDING

2.11 RIPRAP
2.12 TOPSOIL
2.13 SOIL AMENDMENTS
2.13.1 pH Adjuster
2.13.2 Fertilizer
2.13.3 Nitrogen Carrier Fertilizer
2.13.4 Reconstruct Landfill Cover Material

PART 3 EXECUTION

3.1 GENERAL EXCAVATION
3.1.1 Ditches, Gutters, and Channel Changes
3.1.2 Structures
3.2 EXCAVATION OF WASTE
3.3 TIRE REMOVAL
3.4 SPECIAL OR HAZARDOUS WASTE
3.5 SELECTION OF BORROW MATERIAL
3.6 BACKFILL
3.6.1 GENERAL
3.6.2 Backfill Under and Around Structures
3.7 PREPARATION OF GROUND SURFACE FOR EMBANKMENTS
3.7.1 General Requirements
3.8 EMBANKMENTS
3.8.1 Earth Embankments
3.9 SUBGRADE PREPARATION
3.9.1 Construction
3.9.2 Compaction
3.10 FINISHING
3.11 PLACING FILL OVER GEOSYNTHETICS
3.11.1 General
3.11.2 Hauling
3.11.3 Spreading
3.11.4 Compaction
3.11.5 Geosynthetic Damage
3.12 PLACING RIPRAP BEDDING
3.13 PLACING RIPRAP OR RIVER ROCK
3.14 TESTING
3.14.1 Fill and Backfill Material Gradation
3.14.2 In-Place Densities
3.14.3 Moisture Contents
3.14.4 Optimum Moisture and Laboratory Maximum Density
3.14.5 Tolerance Tests for Subgrades
3.15 SUBGRADE AND EMBANKMENT PROTECTION
3.16 FINISHED GRADE AND TOPSOIL
3.16.1 Application of Soil Amendments
3.16.1.1 Applying pH Adjuster
3.16.1.2 Applying Fertilizer
3.16.2 Tillage
3.17 LANDFILL COVERS AND LINERS

-- End of Section Table of Contents --

SECTION 02300

EARTHWORK

PART 1 GENERAL

1.1 REFERENCES

The publications listed below form a part of this specification to the extent referenced. The publications are referred to in the text by basic designation only.

AMERICAN ASSOCIATION OF STATE HIGHWAY AND TRANSPORTATION OFFICIALS (AASHTO)

AASHTO T 90	(2000) Determining the Plastic Limit and Plasticity Index of Soils
AASHTO T 180	(1997) Moisture-Density Relations of Soils Using a 4.54-kg (10-lb) Rammer and an 457 mm (18-in) Drop
AASHTO T 224	(1996) Correction for Coarse Particles in the Soil Compaction Test

ARIZONA DEPARTMENT OF TRANSPORTATION (ADOT)

ARIZ 237	pH and Soluble Salts of Soils
ARIZ 201	Sieving of Course and Fine Graded Soils and Aggregates
ARIZ 238	Percent Carbonates in Aggregate

ASTM INTERNATIONAL (ASTM)

ASTM C 117	(1995) Materials Finer Than 75 micrometer (No. 200) Sieve in Mineral Aggregates by Washing
ASTM C 136	(2001) Sieve Analysis of Fine and Coarse Aggregates
ASTM C 535	(2001) Resistance to Degradation of Large-Size Coarse Aggregate by Abrasion and Impact in the Los Angeles Machine
ASTM D 422	(1963; R 1998) Particle-Size Analysis of Soils
ASTM D 1140	(2000) Amount of Material in Soils Finer

	than the No. 200 (75-micrometer) Sieve
ASTM D 1556	(2000) Density and Unit Weight of Soil in Place by the Sand-Cone Method
ASTM D 1557	(2000) Laboratory Compaction Characteristics of Soil Using Modified Effort (56,000 ft-lbf/cu. ft. (2,700 kN-m/cu. m.))
ASTM D 2167	(2001) Density and Unit Weight of Soil in Place By the Rubber Balloon Method
ASTM D 2487	(2000) Classification of Soils for Engineering Purposes (Unified Soil Classification System)
ASTM D 2922	(2001) Density of Soil and Soil-Aggregate in Place by Nuclear Methods (Shallow Depth)
ASTM D 2937	(2000) Density of Soil in Place by the Drive-Cylinder Method
ASTM D 3017	(2001) Water Content of Soil and Rock in Place by Nuclear Methods (Shallow Depth)
ASTM D 4318	(2000) Liquid Limit, Plastic Limit, and Plasticity Index of Soils
ASTM D 5268	(1992; R 1997) Topsoil Used for Landscaping Purposes

1.2 DEFINITIONS

1.2.1 Satisfactory Materials

Satisfactory materials shall comprise any materials classified by ASTM D 2487 as GW, GP, GM, GP-GM, GW-GM, SW, SP, SM, SW-SM. Satisfactory materials for grading shall be comprised of stones less than 3 inches, except as otherwise specified in Part 2 PRODUCTS of this specification section.

1.2.2 Unsatisfactory Materials

Materials which do not comply with the requirements for satisfactory materials are unsatisfactory. Unsatisfactory materials also include man-made fills; trash; refuse; backfills from previous construction; and material classified as satisfactory which contains root and other organic matter. The Contracting Officer shall be notified of any waste materials as specified in Section 01355, ENVIRONMENTAL PROTECTION.

1.2.3 Cohesionless and Cohesive Materials

Cohesionless materials include materials classified in ASTM D 2487 as GW,

GP, SW, and SP. Cohesive materials include materials classified as GC, SC, ML, CL, MH, and CH. Materials classified as GM and SM will be identified as cohesionless only when the fines are nonplastic. Testing required for classifying materials shall be in accordance with ASTM D 4318, ASTM C 136, ASTM D 422, and ASTM D 1140.

1.2.4 Degree of Compaction

Degree of compaction required, except as noted in the second sentence, is expressed as a percentage of the maximum density obtained by the test procedure presented in ASTM D 1557 abbreviated as a percent of laboratory maximum density. Since ASTM D 1557 applies only to soils that have 30 percent or less by weight of their particles retained on the 3/4 inch sieve, the degree of compaction for material having more than 30 percent by weight of their particles retained on the 3/4 inch sieve shall be expressed as a percentage of the maximum density in accordance with AASHTO T 180 Method D and corrected with AASHTO T 224. To maintain the same percentage of coarse material, the "remove and replace" procedure as described in the NOTE 8 in Paragraph 7.2 of AASHTO T 180 shall be used.

1.2.5 Prepared Ground Surface

Ground surface after completion of required demolition, clearing and grubbing, scalping of sod, stripping of topsoil, excavation to grade, and subgrade preparation.

1.2.6 Completed Course

A course or layer that is ready for next layer or next phase of Work.

1.2.7 Lift

Loose (uncompacted) layer of material.

1.2.8 Geosynthetics

Geotextiles, geogrids, or geomembranes.

1.2.9 Well-Graded

a. A mixture of particle sizes with no specific concentration or lack thereof of one or more sizes.

b. Does not define numerical value that must be placed on coefficient of uniformity, coefficient of curvature, or other specific grain size distribution parameters.

c. Used to define material type that, when compacted, produces a strong and relatively incompressible soil mass free from detrimental voids.

1.2.10 Influence Area

Area within planes sloped downward and outward at 60-degree angle from

horizontal measured from:

a. 1 foot outside outermost edge at base of foundations or slabs.

b. 1 foot outside outermost edge at surface of roadways or shoulder.

c. 0.5 foot outside exterior at spring line of pipes or culverts.

1.2.11 Borrow Material

Material from required excavations on site.

1.2.12 Imported Material

Materials obtained from sources offsite, suitable for specified use.

1.2.13 Waste

Tires, inert debris, construction debris, metal, hazardous waste, and other waste material identified in Article 1.2.8 of Section 01355, ENVIRONMENTAL PROTECTION.

1.2.14 Topsoil

Material suitable for topsoils obtained from areas on or offsite.

1.3 SUBMITTALS

Government approval is required for submittals with a "G" designation; submittals not having a "G" designation are for information only. When used, a designation following the "G" designation identifies the office that will review the submittal for the Government. The following shall be submitted in accordance with Section 01330 SUBMITTAL PROCEDURES:

SD-01 Preconstruction Submittals

Excavation Plan

SD-03 Product Data

Topsoil

Availability of topsoil from the stripping and stock piling operation.

SD-04 Samples

Delivered Topsoil

Samples taken from several locations at the source. The work under this section shall consist of furnishing, hauling and placing topsoil in accordance with the details shown on the project Drawings and the requirements of these specifications.

Soil Amendments

A 10 pound sample.

SD-06 Test Reports

Testing

Within 24 hours of conclusion of physical tests, two copies of test results, including calibration curves and results of calibration tests.

Soil tests that have been performed by the USACE will be made available to the Contractor to review.

Top Soil

Certified reports of inspections and laboratory tests, prepared by an independent testing agency including analysis and interpretation of test results. Each report shall be properly identified. Test methods used and compliance with recognized test standards shall be described.

SD-07 Certificates

Testing

Qualifications of the commercial testing laboratory or Contractor's testing facilities.

Contractor shall submit the required certificates to the USACE for approval.

Topsoil

pH Adjuster

Fertilizer

Prior to the delivery of materials, certificates of compliance attesting that materials meet the specified requirements. Certified copies of the material certificates shall include the following:

a. Topsoil. Particle size, pH, organic matter content, textural class, soluble salts, chemical and mechanical analyses.

b. pH Adjuster. Calcium carbonate equivalent and sieve analysis.

c. Fertilizer. Chemical analysis and composition percent.

1.4 SEQUENCE OF WORK

Earth work shall not begin until all Environmental Protection measures are

in place as specified in Section 01355, ENVIRONMENTAL PROTECTION and Section 01356, STORMWATER POLLUTION PREVENTION MEASURES.

1.5 SUBSURFACE DATA

Subsurface soil boring logs are shown on the Drawings. These data represent the best subsurface information available; however, variations may exist in the subsurface between boring locations.

1.6 CLASSIFICATION OF EXCAVATION

No consideration will be given to the nature of the materials, and all excavation will be designated as unclassified excavation.

1.7 BLASTING

Blasting will not be permitted.

1.8 UTILIZATION OF EXCAVATED MATERIALS

Unsatisfactory materials removed from excavations shall be disposed of as specified in Section 01355, ENVIRONMENTAL PROTECTION. Satisfactory material removed from excavations shall be used, insofar as practicable, in the construction of fills, embankments, subgrades, shoulders, bedding, and for similar purposes. No satisfactory excavated material shall be wasted without specific written authorization. Satisfactory material authorized to be wasted shall be disposed of in designated areas approved for surplus material storage or designated waste areas as directed. No excavated material shall be disposed of to obstruct the flow of the low flow channel or any side drainages, endanger a partly finished structure, impair the efficiency or appearance of any structure, or be detrimental to the completed work in any way.

1.9 SOURCE INSPECTION

The source of delivered topsoil shall be subject to inspection.

1.10 DELIVERY, INSPECTION, STORAGE, AND HANDLING

1.10.1 Delivery

A delivery schedule shall be provided at least 10 calendar days prior to the first day of delivery.

1.10.1.1 Delivered Topsoil

Prior to the delivery of any topsoil, its availability shall be verified in paragraph TOPSOIL. A soil test shall be provided for topsoil delivered to the site. All topsoil shall comply with "Arizona Residential Soil Cleanup" levels and standards.

1.10.1.2 Soil Amendments

Soil amendments shall be delivered to the site in the original, unopened

containers bearing the manufacturer's chemical analysis. In lieu of containers, soil amendments may be furnished in bulk. A chemical analysis shall be provided for bulk deliveries.

1.10.2 Inspection

Other materials shall be inspected for compliance with specified requirements. The following shall be rejected: open soil amendment containers or wet soil amendments; topsoil that contains slag, cinders, stones, lumps of soil, sticks, roots, trash or other material over a minimum 1-1/2 inch diameter; and topsoil that contains viable plants and plant parts. Unacceptable materials shall be removed from the job site.

1.10.3 Storage

Materials shall be stored in designated areas. Fertilizer shall be stored in cool, dry locations away from contaminants. Chemical treatment material shall be stored and protected according to all Federal, State and local regulations and manufacturer's instructions and not with seeding operation materials.

1.10.4 Handling

Except for bulk deliveries, materials shall not be dropped or dumped from vehicles.

PART 2 PRODUCTS

2.1 EARTHFILL

a. Excavated satisfactory material from required excavations free from rocks larger than 3 inches, from roots and other organic matter, ashes, cinders, trash, debris, and other deleterious materials.

b. Provide imported material of equivalent quality, if required to accomplish Work.

c. The Contractor may elect to crush and use onsite concrete debris as earthfill for the project. The crushed material must meet the above gradation requirement. Imported crushed concrete material will not be allowed.

2.2 STRUCTURAL FILL

a. 1-inch minus crushed gravel or crushed rock.

b. Free from dirt, clay balls, and organic material.

c. Well-graded from coarse to fine and containing sufficient fines to bind material when compacted, but with maximum 8 percent by weight passing No. 200 sieve.

d. Structural fill used in conjunction with gabion soil reinforcing

mats should contain a maximum of 12 percent by weight passing the No. 200 sieve and a maximum size of 1/4-inch. This material shall be non-corrosive to steel with a resistivity of not less than 2000 ohm-centermeters and a pH valve between 6.0 and 10.0.

2.3 PROTECTIVE FILL FOR GEOMEMBRANE LININGS

a. Rounded satisfactory materials free from clay, organic matter, or other deleterious material.

b. Gradation as determined in accordance with ASTM C 117 and ASTM C 136:

Sieve Size	Percent Passing by Weight
1/4-inch	100
No. 4	95-100
No. 200	0-5

2.4 GRANULAR DRAIN MATERIAL

As specified in Section 02316 EXCAVATION, TRENCHING, AND BACKFILLING FOR UTILITIES SYSTEMS

2.5 GRANULAR FILTER MATERIAL

a. Clean, hard, durable gravel, free from foreign materials and washed.

b. Gradation as determined in accordance with ASTM C 117 and ASTM C 136:

Sieve Size	Percent Passing by Weight	
	Adjacent to Soil Bentonite	Adjacent to Natural Clay
3-inch	100	100
1-inch	60 to 100	90 to 100
½-inch	25 to 60	80 to 100
No. 4	0 to 20	70 to 90
No. 50		0 to 35
No. 200	0 to 5	0 to 5

2.6 WATER FOR MOISTURE CONDITIONING

Free of hazardous or toxic contaminates, or contaminants deleterious to proper compaction.

2.7 BASE COURSE ROCK

As specified in Section 02722 AGGREGATE BASE COURSE.

2.8 FOUNDATION STABILIZATION ROCK

a. Crushed rock or pit run rock.

b. Uniformly graded from coarse to fine.

c. Free from excessive dirt and other organic material.

d. Maximum 2-1/2 inch particle size.

2.9 RIVER ROCK

Processed rounded material from excavations. Provide imported material as required to meet the needs of the project.

Rock Size	Percent Smaller by Weight
12-inch	95
6-inch	85
4-inch	50
3-inch	10
1-inch	2 to 10

2.10 AGGREGATE RIPRAP BEDDING

a. Gravel with Cobbles or Crushed Rock with Cobble-Sized Pieces:

1. Gradation, as determined in accordance with ASTM C 136:
   a. Well-graded from coarse to fine.
   b. All pieces pass a 6-inch square opening.
   c. Minimum 85 percent by weight passes 4-inch square opening.
   d. Minimum 10 percent by weight passes No. 4 U.S. standard sieve.

2. Abrasion Resistance: Maximum 35 percent wear when tested in accordance with ASTM C 535.

b. Free of roots and other organic or deleterious matter.

c. Bedding material shall be free of plates and columns. Maximum to minimum dimension ratio for particles should be 2:1 maximum.

2.11 RIPRAP

a. Hard and durable quarry stone free from fractures, bedding planes, pronounced weathering, and earth or other adherent coatings.

b. Minimum Dimension of Individual Pieces: Not less than 1/3 maximum dimension.

c. Abrasion Resistance: Maximum 35 percent wear as determined in accordance with ASTM C 535.

d. Bulk Density: Minimum 160 pounds per dry cubic foot.

e. Gradation: Smaller pieces shall generally fill voids between larger pieces without either excess or deficiency of one or more

sizes of stone.

Rock Size	Percent Smaller by Weight	
	D50 = 6-inch	D50 = 18-inch
36-inch	100	95
24-inch	100	85
18-inch	95	50
12-inch	85	
6-1inch	50	15
4-inch	15	
3-inch	0 to 5	0 to 5

2.12 TOPSOIL

Topsoil shall be as defined in ASTM D 5268. When available, the topsoil shall be the existing surface soil stripped and stockpiled onsite in accordance with this Section. When additional topsoil is required beyond the available topsoil from the stripping operation, topsoil shall be delivered and amended as recommended by the soil test for the seed specified. Topsoil shall be free from slag, cinders, stones, lumps of soil, sticks, roots, trash or other material over a minimum 1-1/2 inch diameter. Topsoil shall be free from viable plants and plant parts.

When a source of topsoil is not designated, the Contractor shall furnish a source in accordance with the requirements herein and the requirements of "Arizona Residential Soil Cleanup" levels and standards. Topsoil from sources furnished by the Contractor shall conform to the following requirements:

Prior to hauling any topsoil to the project site, the Contractor shall furnish a written soil analysis, prepared by a laboratory approved by the Contracting Officer, for each source of topsoil proposed for use. The soil analysis shall indicate the pH, soluble salts, percent calcium carbonate, exchangeable sodium in percent and parts per million, plasticity index and size gradation. A minimum of three samples per each 10,000 cubic yards, with at least three samples per source, shall be tested. All tests shall be performed in accordance with the following requirements and test procedures listed in the Table below. At the Contractor's option, the Contracting Officer will test these topsoil samples. The Contractor shall bear the expense of any topsoil testing from proposed sources.

Topsoil shall be fertile, friable soil obtained from well drained arable land which has or is producing healthy crops, grasses or other vegetation. It shall be free draining, non-toxic and capable of sustaining healthy plant growth.

Topsoil shall be reasonably free of subsoil, refuse, roots, heavy clay, clods, noxious weed seeds, phytotoxic materials, coarse sand, large rocks, sticks, brush, litter and other deleterious substances.

For acceptance purposes, each approximate 20,000 cubic yards or topsoil material delivered from a given source to the project site shall be considered a lot. For each lot of topsoil, six representative samples shall be taken at random locations designated by the Contracting Officer. Topsoil shall be sampled after final placement. Each source of topsoil shall be tested separately. The samples from each lot shall be tested by the Contracting Officer for pH, soluble salts, calcium carbonate, P.I., and gradation in accordance with the test procedures listed in the Table below.

The average test result obtained for each characteristic from each lot shall meet the following requirements:

Characteristics	Test Method	Requirement Average of 6 Samples
pH	ARIZ 237	6.0 - 8.3
Soluble Salts: (PPM)	ARIZ 237	2000 Maximum
Calcium Carbonate	ARIZ 238	8% Maximum
P.I.	AASHTO T 90	5 - 20
Gradation:	ARIZ 201	% Passing
2 inch		100
1/2 inch		85 - 100
No. 40		35 - 100

If the average test result for a lot fails to meet all the specifications listed above, the material from that lot shall be rejected. In lieu of removal and replacement, the Contractor may propose for the Contracting Officer's consideration a method of treatment of the in-place material to obtain specification compliance. Provided the Contracting Officer approves, the topsoil shall be treated at no additional cost to the Government.

The lot shall then be resampled and tested for specification compliance by the Contracting Officer.

If the pH of the topsoil for a lot exceeds 8.3, the topsoil shall either be removed and replaced, or be treated as provided for in the preceding paragraph. Any treatment for pH shall be sufficient to obtain an average pH between 6.0 and 8.0, inclusive. The treatment for pH shall follow the recommendations of a recognized soil analyst and shall be subject to the approval of the Contracting Officer. Any treatment for pH shall be at no additional cost to the Government. Additional acceptance testing after treatment for pH will not be required.

2.13 SOIL AMENDMENTS

Soil amendments shall consist of pH adjuster, fertilizer, organic material and soil conditioners meeting the following requirements. Vermiculite shall not be used.

Amendments shall be applied per the directions and application rates

recommended by the manufacturer. Prepared soil shall be prepared using a mixture of 70% excavated site soil and 30% soil conditioner and amendments. Clods or stones exceeding 2 inches in diameter and foreign matter deemed objectionable by the Contracting Officer will not be allowed. All excess soil excavated from the plant pits that has clods or stones 2 inches and larger shall be disposed of on the project site as directed by the Contracting Officer. Amendments shall be mixed with the soil conditioner after they are delivered to the project site under the supervision of the Contracting Officer. No pre-mixing will be allowed prior to delivery to the project. No additional payment will be made for this work and is considered as part of the planting operation.

2.13.1 pH Adjuster

The pH adjuster shall be agricultural grade soil sulfur material. These materials shall be 99% pure, granular or pelletized and flowable. The pH adjuster shall be used to create a favorable soil pH for the plant materials specified.

2.13.2 Fertilizer

It shall be as recommended by the soil test.

2.13.3 Nitrogen Carrier Fertilizer

It shall be as recommended by the soil test.

2.13.4 Reconstruct Landfill Cover Material

The Contractor shall save and segregate existing landfill cover material for use in reconstructing the landfill cover. Provide additional imported cover soil material as required to complete the work. Imported material shall be similar gradation to the existing cover material and meet the design permeability of $1x10^{5}$cm/sec.

PART 3 EXECUTION

3.1 GENERAL EXCAVATION

The Contractor shall perform excavation of every type of material encountered within the limits of the project to the lines, grades, and elevations indicated and as specified. Grading shall be in conformity with the typical sections shown and the tolerances specified in paragraph FINISHING. Satisfactory excavated materials shall be transported to and placed in fill or embankment within the limits of the work. Unsatisfactory materials encountered within the limits of the work shall be excavated below grade and replaced with satisfactory materials as specified in Article 3.2, EXCAVATOIN OF WASTE, or as directed. Such excavated material and the satisfactory material ordered as replacement shall be included in excavation. Surplus satisfactory excavated material not required for fill or embankment shall be disposed of in areas approved for surplus material storage or designated waste areas. Unsatisfactory excavated material shall be disposed of in designated waste or spoil areas as specified in Section 01355, ENVIRONMENTAL PROTECTION. During construction, excavation and fill

shall be performed in a manner and sequence that will provide proper drainage at all times. Material required for fill or embankment in excess of that produced by excavation within the grading limits shall be excavated from the borrow areas indicated or from other approved areas selected by the Contractor as specified.

The Contractor shall prepare an Excavation Plan, Detailing:

a. Methods and sequencing of excavation.

b. Proposed locations of stockpiled excavated material.

c. Proposed onsite and offsite spoil disposal sites.

d. Numbers, types, and sizes of equipment proposed to perform excavations.

3.1.1 Ditches, Gutters, and Channel Changes

Excavation of ditches, gutters, and channel changes shall be accomplished by cutting accurately to the cross sections, grades, and elevations shown. Ditches and gutters shall not be excavated below grades shown. Excessive open ditch or gutter excavation shall be backfilled with satisfactory, thoroughly compacted earthfill. Material excavated shall be disposed of as shown or as directed, except that in no case shall material be deposited less than 4 feet from the edge of a ditch. The Contractor shall maintain excavations free from detrimental quantities of leaves, brush, sticks, trash, and other debris until final acceptance of the work.

3.1.2 Structures

Excavations shall be made to the lines, grades, and elevations shown, or as directed. Trenches and foundation pits shall be of sufficient size to permit the placement and removal of forms for the full length and width of structure footings and foundations as shown. When concrete or masonry is to be placed in an excavated area, the bottom of the excavation shall not be disturbed. Excavation to the final grade level shall not be made until just before the concrete or masonry is to be placed. Do not overexcavate without permission of the Contracting Officer.

3.2 EXCAVATION OF WASTE

The Contractor shall immediately notify the Contracting Officer if waste as defined in Article 1.2.8 of Section 01355 ENVIRONMENTAL PROTECTION is encountered during excavation. Excavation and disposal will be in accordance with requirements in Section 01355, ENVIRONMENTAL PROTECTION. Over excavation of known waste material at structures, reservoirs, and pipelines shall be as shown on the plans. The Contractor shall use the water supply and distribution pipe trench excavation to identify additional areas of waste material. Should waste extend below bottom or beyond the sides of the planned excavation the Contractor shall over excavate within the influence area to the following, or as directed.

Facility	Depth of Over Excavation Below Base (feet)

	Inert Material or Construction Debris	Mixed, Household Waste, or Tires
Structures	5	Depth equal to twice foundation width
Roads	3	3
Reservoirs	3	5
Overbank Canals	2	3
Pipelines	2	3

All overexcavations at inert material, construction debris, or mixed waste locations shall be backfilled as specified for earth embankments fill unless otherwise directed by the Contracting Officer. Overexcavations at household waste locations shall be backfilled with liner material then embankment fill as specified in Section 01355, ENVIRONMENTAL PROTECTION, unless otherwise directed by the Contracting Officer.

3.3 TIRE REMOVAL

All tires and pieces of tires greater than 6 inches in size shall be removed from within the excavation limits and disposed offsite.

All tires removed during excavation activities or recovered from the ground surface shall be handled, stored, transported, and disposed of in accordance with applicable federal, state, and local regulations. Applicable state regulations include: Arizona Revised Statues (ARS) §§44-1301 et seq: §44-1301; §44-1302; §44-1303; §44-1304.01; §44-1305; §44-1306; §44-1307.

Tires shall be cleaned of all soil and other debris prior to removal from site.

3.4 SPECIAL OR HAZARDOUS WASTE

Special or Hazardous Waste: In the event that the Contractor encounters any suspected special or hazardous. waste materials are encountered, The Contractor will immediately notify the Contracting Officer. The Contracting Officer will direct the Contractor to implement the Special and Hazardous Waste Contingency Plan as specified in Section 01355, Environmental Protection.

3.5 SELECTION OF BORROW MATERIAL

Borrow material shall be satisfactory material selected to meet the requirements and conditions of the particular fill or embankment for which it is to be used. Borrow material shall be obtained from excavation areas within the limits of the project site, selected by the Contractor or from approved private sources. Unless otherwise provided in the contract, the Contractor shall obtain from the owners the right to procure material, pay royalties and other charges involved, and bear the expense of developing the sources, including rights-of-way for hauling. Unless specifically provided, no borrow shall be obtained within the limits of the project site without prior written approval. Necessary clearing, grubbing, and satisfactory drainage of borrow pits and the disposal of debris thereon

shall be considered related operations to the borrow excavation.

3.6 BACKFILL

3.6.1 GENERAL

a. Keep placement surfaces free of water, waste, and foreign material during placement and compaction of fill and backfill materials.

b. Place and spread fill and backfill materials in horizontal lifts of uniform thickness, in a manner that avoids segregation, and compact each lift to specified densities prior to placing succeeding lifts. Slope lifts only where necessary to conform to final grades or as necessary to keep placement surfaces drained of water.

c. During filling and backfilling, keep level of fill and backfill around each structure and buried tank even.

d. If pipe, conduit, duct bank, or cable is to be laid within fill or backfill:

1. Fill or backfill to an elevation 2 feet above top of item to be laid.
2. Excavate trench for installation of item.
3. Install bedding, if applicable, as specified in Section 02316 EXCAVATION, TRENCHING, AND BACKFILLING FOR UTILITIES SYSTEMS.
4. Install item.
5. Backfill envelope zone and remaining trench, as specified in Section 02316 EXCAVATION, TRENCHING, AND BACKFILLING FOR UTILITIES SYSTEMS, before resuming filling or backfilling specified in this section.

e. Tolerances:

1. Final Lines and Grades: Within a tolerance of 0.1 foot unless dimensions or grades are shown or specified otherwise.
2. Grade to establish and maintain slopes and drainage as shown. Reverse slopes are not permitted.

f. Settlement: Correct and repair any subsequent damage to structures, pavements, curbs, slabs, piping, and other facilities, caused by settlement of fill or backfill material.

Compaction shall be accomplished by sheepsfoot rollers, pneumatic-tired rollers, steel-wheeled rollers, vibratory compactors, or other approved equipment.

Moisture content of backfill shall be plus 2 to minus 4 percent optimum moisture.

3.6.2 Backfill Under and Around Structures

a. Under Facilities: Within influence area beneath structures, slabs, pavements, curbs, piping, conduits, duct banks, and other

facilities, backfill with granular fill, unless otherwise shown. Place structural fill in lifts of 6-inch maximum thickness and compact each lift to minimum of 95 percent relative compaction.

b. Subsurface Drainage: Backfill with granular drain material, where shown. Place granular drain material in lifts of 8-inch maximum thickness and compact each lift to minimum of 90 percent relative compaction.

3.7 PREPARATION OF GROUND SURFACE FOR EMBANKMENTS

3.7.1 General Requirements

Ground surface on which fill is to be placed shall be stripped of live, dead, or decayed vegetation, rubbish, waste, and other unsatisfactory material; plowed, disked, or otherwise broken up to a depth of 12 inches; pulverized; moistened or aerated as necessary; thoroughly mixed; and compacted to at least 95 percent laboratory maximum density. Compaction shall be accomplished by sheepsfoot rollers, pneumatic-tired rollers, steel-wheeled rollers, vibratory compactors, or other approved equipment. The prepared ground surface shall be scarified and moistened or aerated as required just prior to placement of embankment materials to assure adequate bond between embankment material and the prepared ground surface.

3.8 EMBANKMENTS

3.8.1 Earth Embankments

Earth embankments shall be constructed from satisfactory material meeting the requirements of earthfill free of organic material and rocks with any dimension greater than 3 inches. The material shall be placed in successive horizontal layers of loose material not more than 8 inches in depth. Each layer shall be spread uniformly on a soil surface that has been moistened or aerated as necessary, and scarified or otherwise broken up so that the fill will bond with the surface on which it is placed. After spreading, each layer shall be plowed, disked, or otherwise broken up; moistened or aerated as necessary; thoroughly mixed; 95 percent laboratory maximum density. Compaction requirements for the upper portion of earth embankments forming subgrade for pavements shall be identical with those requirements specified in paragraph SUBGRADE PREPARATION. Compaction shall be accomplished by sheepsfoot rollers, pneumatic-tired rollers, steel-wheeled rollers, vibratory compactors, or other approved equipment.

3.9 SUBGRADE PREPARATION

3.9.1 Construction

Subgrade shall be shaped to line, grade, and cross section, and compacted as specified. This operation shall include plowing, disking, and any moistening or aerating required to obtain specified compaction. Soft or otherwise unsatisfactory material shall be removed and replaced with satisfactory excavated material or other approved material as directed. Low areas resulting from removal of unsatisfactory material shall be brought up to required grade with earthfill materials, and the entire subgrade shall

be shaped to line, grade, and cross section and compacted as specified. The elevation of the finish subgrade shall not vary more than 0.05 foot from the established grade and cross section.

3.9.2 Compaction

Compaction shall be accomplished by sheepsfoot rollers, pneumatic-tired rollers, steel-wheeled rollers, vibratory compactors, or other approved equipment.

3.10 FINISHING

The surface of excavations, embankments, and subgrades shall be finished to a smooth and compact surface in accordance with the lines, grades, and cross sections or elevations shown. The degree of finish for graded areas shall be within 0.1 foot of the grades and elevations indicated except that the degree of finish for subgrades shall be specified in paragraph SUBGRADE PREPARATION. Gutters and ditches shall be finished in a manner that will result in effective drainage. The surface of areas to be turfed shall be finished to a smoothness suitable for the application of turfing materials.

3.11 PLACING FILL OVER GEOSYNTHETICS

3.11.1 General

a. Place fill over geosynthetics with sufficient care so as not to damage them.

b. Place fill only by back dumping and spreading only.

c. Dump fill only on previously placed fill.

d. While operating equipment, avoid sharp turns, sudden starts or stops that could damage geosynthetics.

3.11.2 Hauling

Operate hauling equipment on minimum of 3 feet of covering.

3.11.3 Spreading

a. Spreading equipment shall be track mounted, low ground pressure, equipment.

b. Operate spreading equipment on minimum of 12 inches of fill over geosynthetics.

c. Spread fill in same direction as unseamed overlaps to avoid separation of seams and joints.

d. Never push fill downslope. Spread fill over sideslopes by pushing up from slope bottom.

e. Flatten wrinkles of geotextiles, in direction of spreading.

Correct wrinkles in geotextiles as specified in Section 02373 GEOTEXTILE.

f. Correct wrinkles in geomembranes as specified in Section 02661 POND AND RESERVOIR LINERS - LLDPE

g. Maintain proper overlap of unseamed geosynthetics.

h. Avoid overstressing geosynthetics and seams.

3.11.4 Compaction

Compact fill only after uniformly spread to full thickness shown.

3.11.5 Geosynthetic Damage

a. Mark punctures, tears, or other damage to geosynthetics, so repairs may be made.

b. Clear overlying fill as necessary to repair damage.

c. Repairs to geosynthetics shall be made by respective installers as specified in respective specification section for each geosynthetic.

3.12 PLACING RIPRAP BEDDING

a. Place riprap bedding over prepared subgrade to uniform thickness shown.

b. No mechanical compaction of riprap is required; however, work riprap bedding as necessary to distribute it and to eliminate detrimental voids. Avoid overworking or long pushes that result in segragation of particle sizes.

c. Grade surface of riprap bedding free from irregularities and to tolerances of 0.2 feet from established grade.

d. Place and grade riprap bedding in a manner that avoids subgrade disturbance displacement or damage to geotextile. Do not push riprap bedding down slope. If wrinkles form in geotextile as riprap bedding is placed, correct them as specified in Section 02373 GEOTEXTILE.

3.13 PLACING RIPRAP OR RIVER ROCK

a. Place riprap or river rock bedding to uniform thickness shown.

b. Intermix different sizes of pieces to eliminate segregation and to fill voids between larger pieces with smaller pieces and work surface free from irregularities.

c. Use placement and intermixing methods that avoid disturbing riprap bedding or damaging existing facilities, completed work, or

adjacent property.

d. When placing river rock over shotcrete it shall be placed in a manner and at the locations shown on the Drawings. The surface to receive the rock shall be free of obstructions and debris. The shotcrete shall be protected from damage during the placement of materials.

3.14 TESTING

Testing shall be performed by an approved commercial testing laboratory or by the Contractor subject to approval. If the Contractor elects to establish testing facilities, no work requiring testing will be permitted until the Contractor's facilities have been inspected and approved by the Contracting Officer. Field in-place density shall be determined in accordance with ASTM D 1556, ASTM D 2167 or ASTM D 2922. When ASTM D 2922 is used, ten percent of the test and the calibration curves shall be checked and adjusted using only the sand cone method as described in ASTM D 1556. ASTM D 2922 results in a wet unit weight of soil and when using this method ASTM D 3017 shall be used to determine the moisture content of the soil. The calibration curves furnished with the moisture gauges shall also be checked along with density calibration checks as described in ASTM D 3017 ; the calibration checks of both the density and moisture gauges shall be made at the beginning of a job on each different type of material encountered and at intervals as directed by the Contracting Officer. ASTM D 2937, Drive Cylinder Method shall be used only for soft, fine-grained, cohesive soils. When test results indicate, as determined by the Contracting Officer, that compaction is not as specified, the material shall be removed, replaced and recompacted to meet specification requirements. Tests on recompacted areas shall be performed to determine conformance with specification requirements. Inspections and test results shall be certified by a registered professional civil engineer. These certifications shall state that the tests and observations were performed by or under the direct supervision of the engineer and that the results are representative of the materials or conditions being certified by the tests. The following number of tests, if performed at the appropriate time, will be the minimum acceptable for each type operation.

3.14.1 Fill and Backfill Material Gradation

One test per 1,000 cubic yards stockpiled or in-place source material. Gradation of fill and backfill material shall be determined in accordance with ASTM C 136 ASTM D 422 ASTM D 1140.

3.14.2 In-Place Densities

a. One test per 500 square feet, or fraction thereof, of each lift of fill or backfill areas compacted by other than hand-operated machines.

b. One test per 150 square feet, or fraction thereof, of each lift of fill or backfill areas compacted by hand-operated machines.

c. One test per 100 linear feet, or fraction thereof, of each lift of

embankment or backfill for roads.

3.14.3 Moisture Contents

In the stockpile, excavation, or borrow areas, a minimum of two tests per day per type of material or source of material being placed during stable weather conditions shall be performed. During unstable weather, tests shall be made as dictated by local conditions and approved by the Contracting Officer.

3.14.4 Optimum Moisture and Laboratory Maximum Density

Tests shall be made for each type material or source of material including borrow material to determine the optimum moisture and laboratory maximum density values. One representative test per 1500 cubic yards of fill and backfill, or when any change in material occurs which may affect the optimum moisture content or laboratory maximum density.

3.14.5 Tolerance Tests for Subgrades

Continuous checks on the degree of finish specified in paragraph SUBGRADE PREPARATION shall be made during construction of the subgrades.

3.15 SUBGRADE AND EMBANKMENT PROTECTION

During construction, embankments and excavations shall be kept shaped and drained. Ditches and drains along subgrade shall be maintained to drain effectively at all times. The finished subgrade shall not be disturbed by traffic or other operation and shall be protected and maintained by the Contractor in a satisfactory condition until ballast, subbase, base, or pavement is placed. The storage or stockpiling of materials on the finished subgrade will not be permitted. No subbase, base course, ballast, or pavement shall be laid until the subgrade has been checked and approved, and in no case shall subbase, base, surfacing, pavement, or ballast be placed on a muddy, spongy, or frozen subgrade.

3.16 FINISHED GRADE AND TOPSOIL

The Contractor shall verify that finished grades are as indicated on Drawings, and the placing of topsoil, smooth grading, and compaction requirements have been completed in accordance with this Section, prior to the commencement of the seeding operation.

3.16.1 Application of Soil Amendments

3.16.1.1 Applying pH Adjuster

The pH adjuster shall be applied as recommended by the soil test.

3.16.1.2 Applying Fertilizer

The fertilizer shall be applied as recommended by the soil test.

3.16.2 Tillage

Soil on slopes up to a maximum 3-horizontal-to-1-vertical shall be tilled to a minimum 6 inch depth. Ripper shanks or approved equal shall be placed from 10-36 inches apart to give maximum effective contour furrow berms. The Contractor shall take all necessary precautions to minimize the turning or plowing of the soil bed. The Contractor shall either Cultipack or lightly harrow bed to break up large clods or fill soil voids these efforts will be applied only if necessary or if directed by Contracting Officer. Contractor shall leave the contour furrows. On slopes between 3-horizontal-to-1-vertical and 1-horizontal-to-1 vertical, the soil shall be tilled to a minimum 1 inch depth by scarifying with heavy rakes, or other method. Rototillers shall be used where soil conditions and length of slope permit. On slopes 1-horizontal-to-1 vertical and steeper, no tillage is required. Drainage patterns shall be maintained as indicated on Drawings. Areas compacted by construction operations shall be completely pulverized by tillage. Areas that are compacted within predominantly cobble areas shall not require tillage but shall be ripped or use of another approved method to return the soil to its original compaction. Soil used for repair of surface erosion or grade deficiencies shall conform to topsoil requirements. The pH adjuster and fertilizer may be applied during this procedure.

3.17 LANDFILL COVERS AND LINERS

Landfill replacement covers or new permanent liners shall be installed as specified in Section 01355, ENVIRONMENTAL PROTECTION.

-- End of Section --

SECTION TABLE OF CONTENTS

DIVISION 02 - SITE WORK

SECTION 02316

EXCAVATION, TRENCHING, AND BACKFILLING FOR UTILITIES SYSTEMS

PART 1 GENERAL

1.1 REFERENCES
1.2 DEFINITIONS
1.3 DEGREE OF COMPACTION
1.4 SUBMITTALS

PART 2 PRODUCTS

2.1 MATERIALS
2.1.1 Satisfactory Materials
2.1.2 Unsatisfactory Materials
2.1.3 Cohesionless and Cohesive Materials
2.1.4 Trench Stabilization Material
2.1.5 Bedding Material and Pipe Zone Material
2.1.6 Granular Drain Material
2.1.7 Earth Backfill
2.1.8 Unyielding Material
2.1.9 Unstable Material
2.2 PLASTIC MARKING TAPE

PART 3 EXECUTION

3.1 EXCAVATION
3.1.1 Waste Material
3.1.2 Trench Excavation Requirements
3.1.2.1 Bottom Preparation
3.1.2.2 Removal of Unyielding Material
3.1.2.3 Removal of Unstable Material
3.1.2.4 Excavation for Appurtenances
3.1.2.5 Jacking, Boring, and Tunneling
3.1.3 Stockpiles
3.2 BACKFILLING AND COMPACTION
3.2.1 Trench Stabilization Material Installation
3.2.2 Bedding
3.2.3 Backfill Pipe Zone
3.2.4 Marking Tape Installation
3.2.5 Backfill Above Pipe Zone
3.2.6 Backfill for Appurtenances
3.3 TESTING
3.3.1 Testing Facilities
3.3.2 Testing of Backfill Materials
3.3.3 Field Density Tests

-- End of Section Table of Contents --

SECTION 02316

EXCAVATION, TRENCHING, AND BACKFILLING FOR UTILITIES SYSTEMS

PART 1 GENERAL

1.1 REFERENCES

The publications listed below form a part of this specification to the extent referenced. The publications are referred to in the text by basic designation only.

ASTM INTERNATIONAL (ASTM)

ASTM C 117	(1995) Materials Finer Than 75 micrometer (No. 200) Sieve in Mineral Aggregates by Washing
ASTM C 136	(2001) Sieve Analysis of Fine and Coarse Aggregates
ASTM D 1140	(2000) Amount of Material in Soils Finer than the No. 200 (75-micrometer) Sieve
ASTM D 1556	(2000) Density and Unit Weight of Soil in Place by the Sand-Cone Method
ASTM D 1557	(2000) Laboratory Compaction Characteristics of Soil Using Modified Effort (56,000 ft-lbf/cu. ft. (2,700 kN-m/cu. m.))
ASTM D 2487	(2000) Classification of Soils for Engineering Purposes (Unified Soil Classification System)
ASTM D 2922	(2001) Density of Soil and Soil-Aggregate in Place by Nuclear Methods (Shallow Depth)
ASTM D 3017	(2001) Water Content of Soil and Rock in Place by Nuclear Methods (Shallow Depth)
ASTM D 4253	(2000) Maximum Index Density and Unit Weight of Soils Using a Vibratory Table
ASTM D 4254	(2000) Minimum Index Density and Unit Weight of Soils and Calculation of Relative Density
ASTM D 4318	(2000) Liquid Limit, Plastic Limit, and Plasticity Index of Soils

1.2 DEFINITIONS

a. Base Rock: Granular material upon which manhole bases and other structures are placed.

b. Bedding Material: Granular material upon which pipes, conduits, cables, or duct banks are placed.

c. Imported Material: Material obtained by Contractor from source(s) offsite.

d. Lift: Loose (uncompacted) layer of material.

e. Pipe Zone: Backfill zone that includes full trench width and extends from prepared trench bottom to an upper limit above top outside surface of pipe, conduit, cable or duct bank.

f. Prepared Trench Bottom: Graded trench bottom after excavation and installation of stabilization material, if required, but before installation of bedding material.

g. Relative Compaction: The ratio, in percent, of the as-compacted field dry density to the laboratory maximum dry density as determined by ASTM D 1557. Corrections for oversize material may be applied to either as-compacted field dry density or maximum dry density, as determined by the Contracting Officer.

h. Relative Density: As defined by ASTM D 4253 and ASTM D 4254.

i. Selected Backfill Material: Material available onsite that the Contracting Officer determines to be suitable for a specific use.

j. Well-Graded: A mixture of particle sizes that has no specific concentration or lack thereof of one or more sizes producing a material type that, when compacted, produces a strong and relatively incompressible soil mass free from detrimental voids. Well-Graded does not define any numerical value that must be placed on the coefficient of uniformity, coefficient of curvature, or other specific grain size distribution parameters.

1.3 DEGREE OF COMPACTION

Degree of compaction shall be expressed as a percentage of the maximum density obtained by the test procedure presented in ASTM D 1557.

1.4 SUBMITTALS

Government approval is required for submittals with a "G" designation; submittals not having a "G" designation are for information only. When used, a designation following the "G" designation identifies the office that will review the submittal for the Government. The following shall be submitted in accordance with Section 01330 SUBMITTAL PROCEDURES:

SD-06 Test Reports

Field Density Tests
Testing of Backfill Materials

Copies of all laboratory and field test reports within 24 hours of the completion of the test.

PART 2 PRODUCTS

2.1 MATERIALS

2.1.1 Satisfactory Materials

Satisfactory materials shall comprise any materials classified by ASTM D 2487 as GW, GP, SW, SP.

2.1.2 Unsatisfactory Materials

Materials which do not comply with the requirements for satisfactory materials are unsatisfactory. Unsatisfactory materials also include man-made fills, trash, refuse, or backfills from previous construction. Unsatisfactory material also includes material classified as satisfactory which contains root and other organic matter, frozen material, and stones larger than 3 inches. The Contracting Officer shall be notified of any contaminated materials.

2.1.3 Cohesionless and Cohesive Materials

Cohesionless materials shall include materials classified in ASTM D 2487 as GW, GP, SW, and SP. Cohesive materials shall include materials classified as GC, SC, ML, CL, MH, and CH. Materials classified as GM and SM shall be identified as cohesionless only when the fines are nonplastic.

2.1.4 Trench Stabilization Material

Use foundation stabilization rock as specified in Section 02300, EARTHWORK.

2.1.5 Bedding Material and Pipe Zone Material

a. Clean, friable, and no clay balls, roots, or other organic material.

b. Clean or gravelly sand with less than 8 percent passing No. 200 sieve, as determined in accordance with ASTM D 1140, or gravel or crushed rock within maximum particle size and other requirements as follows unless otherwise specified.

1. Duct Banks: 3/4-inch maximum particle size.
2. PVC Irrigation System Piping and Ductile Iron Pipe with Polyethylene Wrap: 3/8-inch maximum particle size.
3. Pipe Under 18 Inch Diameter: 1/2-inch maximum particle size, except 1/4 inch for stainless steel pipe, copper pipe, tubing, and plastic pipe under 3-inch diameter.

4. Pipe Greater than 18-Inch Diameter: 1-1/2-inch maximum particle size for ductile iron pipe, concrete pipe, welded steel pipe, and pretensioned or prestressed concrete cylinder pipe.
5. Perforated Pipe: Granular drain material.
6. Conduit and Direct-Buried Cable:
   a) Sand, clean or clean to silty, less than 12 percent passing No. 200 sieve.
   b) Individual Particles: Free of sharp edges.
   c) Maximum Size Particle: Pass a No. 4 sieve.
   d) If more than 5 percent passes No. 200 sieve, the fraction that passes No. 40 sieve shall be nonplastic as determined in accordance with ASTM D 4318.

2.1.6 Granular Drain Material

Gradation: ASTM C 117 and ASTM C 136.

Sieve Size	Percent Passing By Weight
3-inch	100
3/4-inch	60-90
No. 48	35-75
No. 200	0-8

2.1.7 Earth Backfill

As specified for earthfill in Section 02300, EARTHWORK

2.1.8 Unyielding Material

Unyielding material shall consist of rock and gravelly soils with stones greater than 6 inches in any dimension or as defined by the pipe manufacturer, whichever is smaller.

2.1.9 Unstable Material

Unstable material shall consist of materials too wet to properly support the utility pipe, conduit, or appurtenant structure.

2.2 PLASTIC MARKING TAPE

Plastic marking tape shall be acid and alkali-resistant polyethylene film, 6 inches wide with minimum thickness of 0.004 inch. Tape shall have a minimum strength of 1750 psi lengthwise and 1500 psi crosswise. The tape shall be manufactured with integral wires, foil backing or other means to enable detection by a metal detector when the tape is buried up to 3 feet deep. The tape shall be of a type specifically manufactured for marking and locating underground utilities. The metallic core of the tape shall be encased in a protective jacket or provided with other means to protect it from corrosion. Tape color shall be as specified in TABLE 1 and shall bear a continuous printed inscription describing the specific utility.

TABLE 1. Tape Color

Red:	Electric
Yellow:	Gas, Oil, Dangerous Materials
Orange:	Telephone, Telegraph, Television, Police, and Fire Communications
Blue:	Water Systems
Green:	Sewer Systems

PART 3 EXECUTION

3.1 EXCAVATION

Excavation shall be performed to the lines and grades indicated or as specified. During excavation, material satisfactory for backfilling shall be stockpiled in an orderly manner at a distance from the banks of the trench equal to 1/2 the depth of the excavation, but in no instance closer than 2 feet. Excavated material not required or not satisfactory for backfill shall be removed from the site. Grading shall be done as may be necessary to prevent surface water from flowing into the excavation, and any water accumulating shall be removed to maintain the stability of the bottom and sides of the excavation. Unauthorized overexcavation shall be backfilled in accordance with paragraph BACKFILLING AND COMPACTION at no additional cost to the Government.

3.1.1 Waste Material

Waste material encountered during excavation shall be removed as specified in Section 01355 ENVIRONMENTAL PROTECTION. Depth of removal shall be as specified in Section 02300, EARTHWORK.

3.1.2 Trench Excavation Requirements

The trench shall be excavated as recommended by the manufacturer of the pipe to be installed. Trench walls below the top of the pipe shall be sloped, or made vertical, and of such width as recommended in the manufacturer's installation manual. Where no manufacturer's installation manual is available, trench walls shall be made vertical. Trench walls more than 3 feet high shall be shored, cut back to a stable slope, or provided with equivalent means of protection for employees who may be exposed to moving ground or cave in. Special attention shall be given to slopes which may be adversely affected by weather or moisture content. The trench width below the top of pipe shall not exceed 24 inches plus pipe outside diameter (O.D.) for pipes of less than 24 inches inside diameter and shall not exceed 36 inches plus pipe outside diameter for sizes larger than 24 inches inside diameter or as shown on the Drawings. Where recommended trench widths are exceeded, redesign, stronger pipe, or special installation procedures shall be utilized by the Contractor. The cost of redesign, stronger pipe, or special installation procedures shall be borne by the Contractor without any additional cost to the Government.

3.1.2.1 Bottom Preparation

The bottoms of trenches shall be accurately graded to provide uniform bearing and support for the bottom quadrant of each section of the pipe. Bell holes shall be excavated to the necessary size at each joint or

coupling to eliminate point bearing. Stones of 1-1/2 inches or greater in any dimension, or as recommended by the pipe manufacturer, whichever is smaller, shall be removed to avoid point bearing.

3.1.2.2 Removal of Unyielding Material

Where unyielding material is encountered in the bottom of the trench, such material shall be removed 6 inches below the required grade and replaced with base stabilization materials as provided in paragraph BACKFILLING AND COMPACTION.

3.1.2.3 Removal of Unstable Material

Where unstable material is encountered in the bottom of the trench, such material shall be removed to the depth directed and replaced to the proper grade with select trench stabilization material as provided in paragraph BACKFILLING AND COMPACTION. When removal of unstable material is required due to the Contractor's fault or neglect in performing the work, the resulting material shall be excavated and replaced by the Contractor without additional cost to the Government.

3.1.2.4 Excavation for Appurtenances

Excavation for manholes, catch-basins, inlets, or similar structures shall be sufficient to permit the placement and removal of forms for the full length and width of the structure footing. Loose disintegrated rock and thin strata shall be removed. Removal of unstable material shall be as specified above. When concrete or masonry is to be placed in an excavated area, special care shall be taken not to disturb the bottom of the excavation. Excavation to the final grade level shall not be made until just before the concrete or masonry is to be placed.

3.1.2.5 Jacking, Boring, and Tunneling

Unless otherwise indicated, excavation shall be by open cut except that sections of a trench may be jacked, bored, or tunneled if, in the opinion of the Contracting Officer, the pipe, cable, or duct can be safely and properly installed and backfill can be properly compacted in such sections.

3.1.3 Stockpiles

Stockpiles of satisfactory material shall be placed and graded as specified. Stockpiles shall be kept in a neat and well drained condition, giving due consideration to drainage at all times. The ground surface at stockpile locations shall be cleared, grubbed, and sealed by rubber-tired equipment, excavated satisfactory and unsatisfactory materials shall be separately stockpiled. Stockpiles of satisfactory materials shall be protected from contamination which may destroy the quality and fitness of the stockpiled material. If the Contractor fails to protect the stockpiles, and any material becomes unsatisfactory, such material shall be removed and replaced with satisfactory material from approved sources at no additional cost to the Government. Locations of stockpiles of satisfactory materials shall be subject to prior approval of the Contracting Officer. All stockpiles shall be identified with signs.

3.2 BACKFILLING AND COMPACTION

Backfill material shall consist of satisfactory material, meeting the requirements of Part 2 PRODUCTS. Backfill shall be placed in layers not exceeding 6 inches loose thickness for compaction by hand operated machine compactors, and 8 inches loose thickness for other than hand operated machines, unless otherwise specified. Each layer shall be compacted to at least 95 percent maximum density.

3.2.1 Trench Stabilization Material Installation

a. Rebuild trench bottom with satisfactory material that meets the requirements of trench stabilization material.

b. Place material over full width of trench in 6-inch lifts to required grade, providing allowance for bedding thickness.

c. Compact each lift so as to provide a firm, unyielding support for the bedding material prior to placing succeeding lifts.

3.2.2 Bedding

a. Furnish satisfactory material that meets the requirements of Article 2.1.5 Bedding Material and Pipe Zone Material where, excavated material is unsuitable for bedding or insufficient in quantity.

b. Place over the full width of the prepared trench bottom in two equal lifts when the required depth exceeds 8 inches.

c. Hand grade and compact each lift to provide a firm, unyielding surface.

d. Minimum Thickness: As follows, except increase depths listed by 2 inches in areas of rock excavation:

   1. Pipe, 15-inch and Smaller: 4 inches.
   2. Pipe, 18-inch to 36 inch: 6 inches.
   3. Pipe, 42-inch and Larger: 8 inches.
   4. Conduit: 3 inches.
   5. Direct-Buried Cable: 3 inches.
   6. Duct Banks: 3 inches.

e. Check grade and correct irregularities in bedding material. Loosen top 1 to 2 inches of compacted bedding material with a rake or by other means to provide a cushion before laying each section of pipe, conduit, direct-buried cable, or duct bank.

f. Install to form continuous and uniform support except at bell holes, if applicable, or minor disturbances resulting from removal of lifting tackle.

g. Bell or Coupling Holes: Excavate in bedding at each joint to

permit proper assembly and inspection of joint and to provide uniform bearing along barrel of pipe or conduit.

3.2.3 Backfill Pipe Zone

a. Upper limit of pipe zone shall not be less than following:

1. Pipe: 12 inches, unless shown otherwise.
2. Conduit: 3 inches, unless shown otherwise.
3. Direct-Buried Cable: 3 inches, unless shown otherwise.
4. Duct Bank: 3 inches, unless shown otherwise.

b. Restrain pipe, conduit, cables, and duct banks as necessary to prevent their movement during backfill operations.

c. Place material simultaneously in lifts on both sides of pipe and, if applicable, between pipes, conduit, cables, and duct banks installed in same trench.

1. Pipe 10 Inch and Smaller Diameter: First lift less than or equal to 1/2 pipe diameter.
2. Pipe Over 10-Inch Diameter: Maximum 6-inch lifts.

d. Thoroughly tamp each lift, including area under haunches, with handheld tamping bars supplemented by "walking in" and slicing material under haunches with a shovel to ensure that voids are completely filled before placing each succeeding lift.

e. After the full depth of the pipe zone material has been placed as specified, compact the material by a minimum of three passes with a vibratory plate compactor only over the area between the sides of the pipe and the trench walls.

f. Do not use power-driven impact compactors to compact pipe zone material.

3.2.4 Marking Tape Installation

a. Continuously install marking tape along centerline of all buried piping, at depth of 2 feet. Coordinate with piping installation Drawings.

1. Detectable Marking Tape: Install with nonmetallic piping and waterlines.
2. Nondetectable Marking Tape: Install with metallic piping.

3.2.5 Backfill Above Pipe Zone

a. General:

1. Process excavated material to meet specified gradation requirements.
2. Adjust moisture content as necessary to obtain specified compaction.

3. Do not allow backfill to free fall into the trench or allow heavy, sharp pieces of material to be placed as backfill until after at least 2 feet of backfill has been provided over the top of pipe.
4. Do not use power driven impact type compactors for compaction until at least 4 feet of backfill is placed over top of pipe.
5. Backfill to grade with proper allowances for topsoil, crushed rock surfacing, and pavement thicknesses, wherever applicable.
6. Backfill around structures with same class backfill as specified for adjacent trench unless otherwise shown or specified.

b. Backfill for areas under structures, roads, and trails:

Backfill trench above the pipe zone with granular backfill in lifts not exceeding 6 inches. Compact each lift to a minimum of 95 percent relative compaction in accordance with ASTM D 1557 prior to placing succeeding lifts.

c. Backfill for areas outside of structures, roads, and trails:

Place earth backfill in lifts not exceeding 6 inch thickness. Mechanically compact each lift to a minimum of 60 percent relative compaction in accordance with ASTM D 1557 prior to placing succeeding lifts.

3.2.6 Backfill for Appurtenances

Backfill appurtenances as specified in Section 02300, EARTHWORK

3.3 TESTING

Testing shall be the responsibility of the Contractor and shall be performed at no additional cost to the Government.

3.3.1 Testing Facilities

Tests shall be performed by an approved commercial testing laboratory or may be tested by facilities furnished by the Contractor as specified in Section 02300 EARTHWORK. No work requiring testing will be permitted until the facilities have been inspected and approved by the Contracting Officer.

3.3.2 Testing of Backfill Materials

Classification of backfill materials shall be determined in accordance with ASTM D 2487 and the moisture-density relations of soils shall be determined in accordance with ASTM D 1557. A minimum of one soil classification and one moisture-density relation test shall be performed on each different type of material used for bedding and backfill.

3.3.3 Field Density Tests

Tests shall be performed in sufficient numbers to ensure that the specified density is being obtained. A minimum of one field density test per lift of backfill for every 250 linear feet of installation shall be performed. One

moisture density relationship shall be determined for every 1500 cubic yards of material used. Field in-place density shall be determined in accordance with ASTM D 1556. When ASTM D 2922 is used, 10 percent of the test and the calibration curves shall be checked and adjusted using the sand cone method as described in paragraph Calibration of the ASTM publication. ASTM D 2922 results in a wet unit weight of soil and when using this method, ASTM D 3017 shall be used to determine the moisture content of the soil. The calibration curves furnished with the moisture gauges shall be checked along with density calibration checks as described in ASTM D 3017. The calibration checks of both the density and moisture gauges shall be made at the beginning of a job, on each different type of material encountered, at intervals as directed by the Contracting Officer. Copies of calibration curves, results of calibration tests, and field and laboratory density tests shall be furnished to the Contracting Officer. Trenches improperly compacted shall be reopened to the depth directed, then refilled and compacted to the density specified at no additional cost to the Government.

-- End of Section --

SECTION TABLE OF CONTENTS

DIVISION 02 - SITE WORK

SECTION 02371

WIRE MESH GABIONS

PART 1 GENERAL

1.1 REFERENCES
1.2 GENERAL REQUIREMENTS
1.3 SUBMITTALS
1.4 DESCRIPTION
1.5 DEFINITIONS
1.5.1 Double twisted wire mesh Gabions
1.6 Government Testing and Studies
1.6.1 Samples

PART 2 PRODUCTS

2.1 MATERIALS
2.1.1 Double twisted wire mesh Gabions
2.1.2 Alternative Wire Fasteners for Gabions
2.1.2.1 Ring Fasteners
2.1.3 Testing
2.1.4 Stone Fill
2.1.4.1 General
2.1.4.2 Stone Quality
2.1.4.3 Gradation
2.1.5 Filter Material

PART 3 EXECUTION

3.1 MATERIAL DELIVERY
3.2 FOUNDATION PREPARATION
3.3 FILTER PLACEMENT
3.4 ASSEMBLY
3.4.1 Double twisted wire mesh Gabions
3.5 LACING OPERATIONS
3.5.1 Double Twisted Wire Mesh Gabions
3.6 INSTALLATION AND FILLING
3.6.1 Double Twisted Wire Mesh Gabions
3.6.2 Non-rectangular Shapes
3.7 CLOSING

-- End of Section Table of Contents --

SECTION 02371

WIRE MESH GABIONS

PART 1 GENERAL

1.1 REFERENCES

The publications listed below form a part of this specification to the extent referenced. The publications are referred to in the text by basic designation only.

ASTM INTERNATIONAL (ASTM)

ASTM A 370	(2002) Mechanical Testing of Steel Products
ASTM A 641/A 641M	(1998) Zinc-Coated (Galvanized) Carbon Steel Wire
ASTM A 764	(1995; R 2001) Metallic Coated Carbon Steel Wire, Coated at Size and Drawn to Size for Mechanical Springs
ASTM A 974	(1997) Welded Wire Fabric Gabions and Gabion Mattresses (Metallic Coated or Polyvinyl Chloride (PVC) Coated)
ASTM A 975	(1997) Double-Twisted Hexagonal Mesh Gabions and Revet Mattresses (Metallic-Coated Steel Wire or Metallic-Coated Steel Wire With Poly(Vinyl Chloride) (PVC) Coating)
ASTM C 33	(2001a) Concrete Aggregates
ASTM C 136	(2001) Sieve Analysis of Fine and Coarse Aggregates

U.S. ARMY CORPS OF ENGINEERS (USACE)

COE CRD-C 144	(1992) Standard Test Method for Resistance of Rock to Freezing and Thawing

1.2 GENERAL REQUIREMENTS

The work under this specification includes furnishing, assembling, filling and tying open wire mesh rectangular compartmented gabions and gabion walls placed on a prepared surface of filter material, as specified, and in accordance with the lines, grades, and dimensions shown or otherwise established in the field.

1.3 SUBMITTALS

Government approval is required for submittal with "G" designation; submittals not having a "G" designation are for information only. When used, a designation following the "G" designation identifies the office that will review the submittal for the Government. The following shall be submitted in accordance with Section 01330 SUBMITTAL PROCEDURES:

SD-02 Shop Drawings

Shop DrawingsG, RE

Design CalculationsG, RE

Shop drawings and design calculations for all gabion wall soil reinforcing shall be submitted at least 10 days prior to fabrication or delivery on site.

SD-04 Samples

Double Twisted Wire Mesh Gabions

Alternative Wire Fasteners

Samples of the materials, used to fabricate the gabions or mattresses, shall be furnished to the Contracting Officer 60 days prior to assembly of units onsite so that testing may be performed by the Government in accordance with either ASTM A 974 or ASTM A 975 depending on which system is being furnished by the Contractor.

SD-06 Test Reports

Double Twisted Wire Mesh Gabions

Alternative Wire Fasteners

For each shipment of wire gabions or mattresses delivered to the site, the Contractor shall furnish the Contracting Officer, in duplicate, test reports or records that have been performed during the last year on all material contained within the shipment meets the composition, physical, and manufacturing requirements stated in this specification.

SD-07 Certificates

Stone Fill
Filter Material

A certificate or affidavit signed by a legally authorized official of the supplier of the stone fill and the supplier of the natural filter material that it meets the quality required and gradation limits specified.

1.4 DESCRIPTION

Gabions are double-twisted wire mesh containers of variable sizes, uniformly partitioned into internal cells, interconnected with other similar units, and filled with stone at the project site to form flexible, permeable, monolithic structures. Gabions shall be manufactured with all components including reinforcement mats mechanically connected at the production facility. The supply to the jobsite of unassembled individual wire mesh components (panels) forming gabions will not be permitted. Definitions of terms specific to this specification and to all materials furnished on the jobsite, with the exception of the rock to fill the baskets and the filter material, shall refer and be in compliance with ASTM A 975 for double twisted wire mesh Gabions.

1.5 DEFINITIONS

1.5.1 Double twisted wire mesh Gabions

Consists of double-twisted wire mesh, lacing wire, and stiffeners. Shall be produced from zinc-coated wire and overcoated with PVC. Fasteners shall be of stainless steel wire.

1.6 Government Testing and Studies

1.6.1 Samples

Samples of materials used to fabricate the Gabions shall be furnished to the Contracting Officer 60 days prior to start of installation. Samples will be tested in accordance with specification. The Government reserves the right to test additional samples to verify the submitted test records at the Government's expense. When the first test results indicate that the fasteners do not meet the specified requirements, the additional test will be at the Contractor's expense. The fasteners will be rejected after two tests failing to meet the requirements.

PART 2 PRODUCTS

2.1 MATERIALS

2.1.1 Double twisted wire mesh Gabions

Double twisted wire mesh Gabions and soil reinforcement mats shall be manufactured with a non-raveling mesh made by twisting continuous pairs of wires through three half turns (commonly called double twisted) to form a hexagonal-shaped opening. Gabion sizes, wire diameters, mesh opening sizes, and tolerances shall comply with the requirements of ASTM A 975 (Tables 1, 3, 4, 5, 6, and Sections 9). Gabions shall meet the following test requirements:

Metallic coating - The coating weights shall conform to the requirements of ASTM A 641/A 641M, Class 3.

Wire Tensile Strength - The tensile strength of the wire used for the double twisted mesh, lacing wire, and stiffener, when tested in accordance with Test Methods and definitions ASTM A 370, shall be in

accordance with the requirements of ASTM A 641/A 641M for soft temper wire.

Mesh strength and panel to panel joint strength - The minimum strength requirements of the mesh, selvedge wire to mesh connection, panel to panel connection, and punch test, when tested in accordance with ASTM A 975 Section 13.1, shall be as shown in Table 1. The strength values reported in lb/ft are referred to the unitary width of the specimen. The panel to panel test shall demonstrate the ability of the fastening system to achieve the required strength, and indicate the number of wire revolutions for the lacing wire or the ring spacing for ring fasteners used. The same number of wire revolutions or ring spacing shall be used in the field installation.

TABLE 1

Minimum Strength Requirements of Mesh and Connections

Test description	Gabions, metallic coated lb/ft
Tensile strength parallel to twist	3500
Tensile strength perpendicular to twist	1800
Connection to selvedges	1400
Panel to panel (using lacing wire or ring fasteners	1400

Test description	Gabions, metallic coated lb
Punch Test	6000

2.1.2 Alternative Wire Fasteners for Gabions

Subject to approval of the Contracting Officer, alternative fastening systems may be used in lieu of lacing wire. Alternative fasteners to lacing wire recommended for woven wire gabions and mattresses, according to ASTM A 975, are steel ring fasteners for metallic coated gabions and mattresses. Ring fasteners for woven wire gabions and mattresses shall comply with the minimum requirements indicated in paragraph Ring Fasteners below, and they shall develop a minimum panel to panel joint strength as indicated in TABLE 1. The Contractor shall provide a complete description of the fastener system and a description of a properly installed fastener, including Drawings or photographs if necessary. The Contractor shall provide test results that demonstrate that the alternative-fastening system meets the requirements of the specifications, according to the following

criteria:

a. That the proposed fastener system can consistently produce a panel to panel joint strength as indicated in the TABLE 1 for double twisted wire mesh gabions;

b. That the proposed fastener system does not cause damage to the protective coating on the wire;

c. That the Contractor has the proper equipment and trained employees to correctly install the fasteners;

d. That proper installation can be readily verified by visual inspection.

Samples of wire fasteners with their certified test records shall be submitted at least 60 days in advance to the Contracting Officer for approval. The Government reserves the right to test additional samples to verify the submitted test records at the Government's expense. When the first test results indicate that the fasteners do not meet the specified requirements, the additional test will be at the Contractor's expense. The fasteners will be rejected after two tests failing to meet the requirements.

2.1.2.1 Ring Fasteners

The tensile strength of the zinc-coated steel wire, zinc-5% aluminum coated mischmetal alloy-coated steel wire and aluminum-coated steel wire used for fasteners shall be in accordance with the requirements of ASTM A 764, Type A, B, or C, Table 2 or Table 3. Any fastener system shall give the number of fasteners required to comply with TABLE 1, in accordance with ASTM A 975 (Section 13.1.2) for woven wire gabions and mattresses. Ring fasteners shall not be installed more than 4 inches apart. Each fastener type shall be closed and the free ends of the fastener shall overlap a minimum of 1 inch. The manufacturer or supplier shall state the number of fasteners required for all vertical and horizontal connections for single and multiple basket joining.

2.1.3 Testing

Test records made within one year by certified laboratories and Government agencies will be used to determine the acceptability of the fastening system. Samples of wire fasteners and samples of material for fabricating the gabions and mattresses with their certified test records shall be submitted at least 60 days in advance to the Contracting Officer for approval. The Government reserves the right to test additional samples to verify the submitted test records at the Government's expense. When the first test results indicate that the fasteners do not meet the specified requirements, the additional test will be at the Contractor's expense. The fasteners will be rejected after two tests failing to meet the requirements.

2.1.4 Stone Fill

2.1.4.1 General

For gabions, the ability to function properly depends upon their stability, which is partly depending upon the rocks filling them. Rock sizes should be chosen to prevent them from falling through the mesh of the gabions. The rock has also to withstand natural weathering processes during the life of the project that would cause it to breakdown to sizes smaller than the wire mesh opening dimensions. Rock to fill gabions shall be durable and of suitable quality to ensure permanence in the structure and climate in which it is to be used.

a. Delivery. Rock shall be delivered to the work site in a manner to minimize its reduction in sizes (breakdown) during the handling of the rock, and be placed and secured within the assembled and interconnected gabion.

b. Sources. The sources from which the Contractor proposes to obtain the material shall be selected well in advance of the time when the material will be required in the work. The inclusion of more than 5% by weight of dirt, sand, clay, and rock fines will not be permitted. Rock may be of a natural deposit of the required sizes, or may be crushed rock produced by any suitable method and by the use of any device that yields the required size limits chosen in TABLE 4.

c. Properties. Rocks shall be Salt River rock and shall be hard, angular to round, durable and of such quality that they shall not disintegrate on exposure to water or weathering during the life of the structure.

d. Non-listed Source. The Contractor may, as an option, propose to furnish stone from one non-listed source. The Government may make such investigations and tests as necessary to determine whether acceptable stone can be produced from the proposed source. All investigations and tests determined as necessary by the Government to determine suitability of stone from an alternate source will be at the expense of the Contractor. Suitable samples of stone fill material shall be collected in the presence of a Government representative and submitted to the Contracting Officer for approval prior to delivery of any such material to the work site. Unless otherwise specified, all test samples shall be obtained and delivered at the Contractor's expense to the project site at least 60 days in advance of the time when placing of the stone-filled gabions is expected to begin. Suitable tests and/or service records will be used to determine the acceptability of the stone. In the event suitable test reports and service records are not available, as in the case of newly operated sources, the material may be subjected to petrography analysis, specific gravity, absorption, wetting and drying, freezing and thawing, and such other tests as may be considered necessary to demonstrate to the satisfaction of the Contracting Officer that the materials are acceptable for use in the work. All tests will be made by or under the supervision of the Government.

2.1.4.2 Stone Quality

Stone fill, crushed stone, shall meet the quality requirements of ASTM C 33, and freezing and thawing requirements of COE CRD-C 144 for the region of the United States in which the structure will be constructed.

2.1.4.3 Gradation

Gradation of stone for gabions shall be performed every 100 tons placed under this contract in accordance with ASTM C 136. Sizes of rock to fill gabions are chosen on the basis of the mesh sizes, the structure's thickness, and within the limits shown in TABLE 4. Within each range of sizes, the rock shall be large enough to prevent individual pieces from passing through the mesh openings. Each range of sizes may allow for a variation of 5% oversize rock by weight, or 5% undersize rock by weight, or both.

a. Oversize Rock. In all cases, the sizes of any oversize rock shall allow for the placement of three or more layers of rock within each gabion compartment.

b. Undersize Rock. In all cases, undersize rock shall be placed within the interior of the gabion compartment and shall not be placed on the exposed surface of the structure. There shall be a maximum limit of 5% undersize or 5% oversize rock, or both, within each gabion compartment. The required rock gradation is reported in Table 4.

TABLE 4
Required rock gradation for gabions

Type of structure	Thickness (height) inch	Rock sizes inch
Gabions	Less than 12	4 - 8
Gabions	12 or higher	4 - 12

2.1.5 Filter Material

Filter fabrics shall meet the provisions of Section 02373 GEOTEXTILE.

PART 3 EXECUTION

3.1 MATERIAL DELIVERY

Gabions shall be delivered with all components mechanically connected at the production facility. All gabions are supplied in the collapsed form, either folded or bundled or rolled, for shipping.

a. Gabions shall be delivered to the jobsite labeled in bundles. Labels shall show the dimensions of the gabions included, the number of pieces and the color code.

3.2 FOUNDATION PREPARATION

After excavation or stripping, to the extent indicated on the Drawings or as directed by the Contracting Officer, all remaining loose or otherwise

unsuitable materials shall be removed. All depressions shall be carefully backfilled to grade. If pervious materials are encountered in the foundation depressions, the areas shall be backfilled with free-draining materials. Otherwise, the depressions shall be backfilled with suitable materials from adjacent required excavation, or other approved source, and compacted to a density at least equal to that of the adjacent foundation. Any debris that will impede the proper installation and final appearance of the gabion layer shall also be removed, and the voids carefully backfilled and compacted as specified above. Immediately prior to placing the material, the Contracting Officer shall inspect the prepared foundation surface, and no material shall be placed thereon until that area has been approved.

3.3 FILTER PLACEMENT

Filter material shall be placed as shown on Drawings in a manner satisfactory to the Contracting Officer. Any damage to the foundation surface during the filter placement shall be repaired before proceeding with the work. Compaction of the filter materials will not be required, but it shall be finished to present a reasonably even surface free from mounds or windrows.

3.4 ASSEMBLY

3.4.1 Double twisted wire mesh Gabions

The gabions shall be opened and unfolded one by one on a flat, hard surface. Gabion units over 6 foot in length usually have an extra shipping fold, which must be removed. The sides, ends and diaphragms shall be lifted up into a vertical position to form an open box shape. The back and the front panels of the gabion shall be connected to the end panels and center diaphragms. The top corner of the end panels and center diaphragms have a selvedge wire extending approximately 4 inches out from the corner edge. The end panels and the diaphragms shall be raised to a vertical position and the selvedge wire shall be wrapped around the edge wire of the top and back panels.

3.5 LACING OPERATIONS

3.5.1 Double Twisted Wire Mesh Gabions

Either lacing wire or ring fasteners are permitted to lace double twisted wire mesh Gabions.

a. When using lacing wire, a piece of wire 1.2 to 1.5 times the length of the edge to be laced shall be cut off. If the edge of the basket is 3 foot long, no more than 4 to 5 feet of wire should be used at a time to lace. For vertical joints, starting at the bottom end of the panel, the lacing wire shall be twisted and wrapped two times around the bottom selvedge and double and single loops shall be alternated through at intervals not bigger than 4 to 6 inches. The operation shall be finished by looping around the top selvedge wire. The use of pliers to assemble the units with lacing wire is normally recommended.

b. When steel wire ring fasteners are used, the rings shall be installed at the top and bottom connections of the end and center diaphragms. The ring spacing shall be based on the minimum pull apart strength as specified in TABLE 1. In any case, the maximum ring spacing along the edges shall not exceed 6 inches. The use of either a mechanical or a pneumatic fastening tool for steel wire ring fasteners is required. Ring fasteners shall be galvanized, stainless steel or Zn-5% aluminum-mischmetal alloy coated.

3.6 INSTALLATION AND FILLING

Empty gabion units shall be assembled individually and placed on the approved surface to the lines and grades as shown or as directed, with the sides, ends, and diaphragms erected in such a manner to ensure the correct position of all creases and that the tops of all sides are level. All gabion units shall be properly staggered horizontally and vertically as shown in the construction Drawings. Finished gabion structures shall have no gaps along the perimeter of the contact surfaces between adjoining units. All adjoining empty gabion units shall be connected along the perimeter of their contact surfaces in order to obtain a monolithic structure. All lacing wire terminals shall be securely fastened. All joining shall be made through selvedge-to-selvedge or selvedge-to-edge wire connection; mesh-to-mesh or selvedge-to-mesh wire connection is prohibited except in the case where baskets are offset or stacked and selvedge-to-mesh or mesh-to-mesh wire connection would be necessary. As a minimum, a fastener shall be installed at each mesh opening at the location where mesh wire meets selvedge or edge wire.

a. The initial line of basket units shall be placed on the prepared filter layer surface and adjoining empty baskets set to line and grade, and common sides with adjacent units thoroughly laced or fastened. They shall be placed in a manner to remove any kinks from the mesh and to a uniform alignment. The basket units then shall be partially filled to provide anchorage against deformation and displacement during the filling operation. The stone shall be placed in the units as specified in paragraph 2.1.4.3 Stone Fill, subparagraph Gradation.

b. Undue deformation and bulging of the mesh shall be corrected prior to further stone filling. Care shall be taken, when placing the stone by hand or machine, to assure that the PVC coating on gabions will not be damaged. All visible faces shall be filled with some hand placement to ensure a neat and compact appearance and that the void ratio is kept to a minimum.

c. Gabions shall be uniformly overfilled by about 1 to 2 inches to compensate for future rock settlements. Gabions can be filled by any kind of earth-filling equipment, such as a backhoe, gradall, crane, etc. The maximum height from which the stones may be dropped into the baskets shall be 4 feet. If PVC coated materials are used, no work shall take place unless the ambient temperature is above 20 degrees F.

3.6.1 Double Twisted Wire Mesh Gabions

After the foundation has been prepared, the pre-assembled gabions shall be placed in their proper location to form the structure. Gabions shall be connected together and aligned before filling the baskets with rock. All connections (panel-to-panel) and basket-to-basket shall be already carried out as described in paragraph ASSEMBLY. Stone fill shall have a gradation of 4 to 12 inches, as described in paragraph Gradation, and shall be placed in 1 foot lifts. Cells shall be filled to a depth not exceeding 1 foot at a time. The fill layer should never be more than 1 foot higher than any adjoining cell. Stiffeners or internal cross ties shall be installed in all front and side of the gabions at 1/3 and 2/3 of the height for 3 feet or higher gabions, as the cell is being filled. Stiffeners shall be installed in the center of the cells. Internal cross ties, or alternatively the preformed stiffeners, shall be looped around three twisted wire mesh openings at each basket face and the wire terminals shall be securely twisted to prevent their loosening. The number of voids shall be minimized by using a well-graded stone in order to achieve a dense, compact stone fill. All corners shall be securely connected to the neighboring baskets of the same layer before filling the units. When more than one layer of gabions is required, in order for the individual units to become incorporated into one continuous structure, the next layer of gabions shall be connected to the layer underneath after this layer has been securely closed. Gabions shall be uniformly overfilled by about 1 to 2 inches to compensate for future rock settlements. The Contractor shall submit shop drawings and design calculations for wall system provided.

3.6.2 Non-rectangular Shapes

Gabion units can conform to bends up to a radius of curvature of 60 to 70 feet without alterations. Units shall be securely connected together first, and be placed to the required curvature, holding them in position by staking the units to the ground with hardwood pegs before filling. For other shapes, bevels and miters can be easily formed by cutting and folding the panels to the required angles.

3.7 CLOSING

Lids shall be tightly secured along all edges, ends and diaphragms in the same manner as described for assembling. Adjacent lids may be securely attached simultaneously. The panel edges shall be pulled to be connected using the appropriate closing tools where necessary. Single point leverage tools, such as crowbars, may damage the wire mesh and shall not be used. All end wires shall then be turned in.

-- End of Section --

SECTION TABLE OF CONTENTS

DIVISION 02 - SITE WORK

SECTION 02373

GEOTEXTILE

PART 1 GENERAL

1.1 REFERENCES
1.2 DEFINITIONS
1.3 SUBMITTALS
1.4 DELIVERY, STORAGE AND HANDLING
1.4.1 Delivery
1.4.2 Storage
1.4.3 Handling

PART 2 PRODUCTS

2.1 RAW MATERIALS
2.1.1 Non-Woven Geotextile
2.1.2 Woven Geotextile
2.1.3 Thread
2.2 MANUFACTURING QUALITY CONTROL SAMPLING AND TESTING

PART 3 EXECUTION

3.1 QUALITY ASSURANCE SAMPLES AND TESTS
3.1.1 Quality Assurance Samples
3.1.2 Quality Assurance Tests
3.2 INSTALLATION
3.2.1 Subgrade Preparation
3.2.2 Placement
3.3 SEAMS
3.3.1 Overlap Seams
3.3.2 Sewn Seams
3.4 PROTECTION
3.4.1 Securing Geotextile
3.5 REPAIRS
3.6 PENETRATIONS
3.7 COVERING

-- End of Section Table of Contents --

SECTION 02373

GEOTEXTILE

PART 1 GENERAL

1.1 REFERENCES

The publications listed below form a part of the specification to the extent referenced. The publications are referred to in the text by basic designation only.

ASTM INTERNATIONAL (ASTM)

ASTM D 4354	(1999) Sampling of Geosynthetics for Testing
ASTM D 4355	(1999) Deterioration of Geotextiles from Exposure to Ultraviolet Light and Water (Xenon-Arc Type Apparatus)
ASTM D 4491	(1999a) Water Permeability of Geotextiles by Permittivity
ASTM D 4533	(1991; R 1996) Trapezoid Tearing Strength of Geotextiles
ASTM D 4595	(1986; R 2001) Tensile Properties of Geotextiles by the Wide-Width Strip Method
ASTM D 4632	(1991; R 1996) Grab Breaking Load and Elongation of Geotextiles
ASTM D 4751	(1999a) Determining Apparent Opening Size of a Geotextile
ASTM D 4759	(1988; R 1996) Determining the Specification Conformance of Geosynthetics
ASTM D 4833	(2000) Index Puncture Resistance of Geotextiles, Geomembranes, and Related Products
ASTM D 4873	(2001) Identification, Storage, and Handling of Geosynthetic Rolls and Samples
ASTM D 4884	(1996) Strength of Sewn or Thermally Bonded Seams of Geotextile

1.2 DEFINITIONS

a. Fabric: Geotextile, a permeable geosynthetic comprised solely of textiles.

b. Minimum Average Roll Value (MinARV): Minimum of series of average roll values representative of geotextile furnished.

c. Maximum Average Roll Value (MaxARV): Maximum of series of average roll values representative of geotextile furnished.

d. Nondestructive Sample: Sample representative of finished Work, prepared for testing without destruction of Work.

e. Overlap: Distance measured perpendicular from overlapping edge of one sheet to underlying edge of adjacent sheet.

f. Seam Efficiency: Ratio of tensile strength across seam to strength of intact geotextile, when tested according to ASTM D 4884.

1.3 SUBMITTALS

Government approval is required for submittals with a "G" designation; submittals not having a "G" designation are for information only. When used, a designation following the "G" designation identifies the office that will review the submittal for the Government. The following shall be submitted in accordance with Section 01330 SUBMITTAL PROCEDURES:

SD-03 Product Data

Non-Woven Geotextile

A minimum of 7 days prior to scheduled use, proposed material specification along with data sheets showing the physical properties of the material.

Woven Geotextile

A minimum of 7 days prior to scheduled use, proposed material specification along with data sheets showing the physical properties of the material.

Manufacturing Quality Control Sampling and Testing

A minimum of 7 days prior to scheduled use, manufacturer's quality control manual.

SD-04 Samples

Quality Assurance Samples and Tests

Samples for quality assurance testing; 7 days shall be allotted in the schedule to allow for testing.

SD-07 Certificates

Non-Woven Geotextile

A minimum of 7 days prior to scheduled use, manufacturer's certificate of compliance stating that the geotextile meets the requirements of this section. For needle punched geotextiles, the manufacturer shall also certify that the geotextile has been continuously inspected using permanent on-line full-width metal detectors and does not contain any needles which could damage other geosynthetic layers. The certificate of compliance shall be attested to by a person having legal authority to bind the geotextile manufacturer.

Woven Geotextile

A minimum of 7 days prior to scheduled use, manufacturer's certificate of compliance stating that the geotextile meets the requirements of this section. For needle punched geotextiles, the manufacturer shall also certify that the geotextile has been continuously inspected using permanent on-line full-width metal detectors and does not contain any needles which could damage other geosynthetic layers. The certificate of compliance shall be attested to by a person having legal authority to bind the geotextile manufacturer.

1.4 DELIVERY, STORAGE AND HANDLING

Delivery, storage, and handling of geotextile shall be in accordance with ASTM D 4873.

1.4.1 Delivery

The Contracting Officer shall be notified a minimum of 24 hours prior to delivery and unloading of geotextile rolls. Rolls shall be packaged in an opaque, waterproof, protective plastic wrapping. The plastic wrapping shall not be removed until deployment. If quality assurance samples are collected, rolls shall be immediately rewrapped with the plastic wrapping. Geotextile or plastic wrapping damaged during storage or handling shall be repaired or replaced, as directed. Each roll shall be labeled with the manufacturer's name, geotextile type, roll number, roll dimensions, and date manufactured.

1.4.2 Storage

Rolls of geotextile shall be protected from construction equipment, chemicals, sparks and flames, temperatures in excess of 160 degrees F, or any other environmental condition that may damage the physical properties of the geotextile. To protect geotextile from becoming saturated, rolls shall either be elevated off the ground or placed on a sacrificial sheet of plastic in an area where water will not accumulate.

1.4.3 Handling

Geotextile rolls shall be handled and unloaded with load carrying straps, a

fork lift with a stinger bar, or an axial bar assembly. Rolls shall not be dragged along the ground, lifted by one end, or dropped to the ground.

PART 2 PRODUCTS

2.1 RAW MATERIALS

2.1.1 Non-Woven Geotextile

Geotextile shall be a nonwoven pervious sheet of polymeric material and shall consist of long-chain synthetic polymers composed of at least 95 percent by weight polyolefins, polyesters, or polyamides. The use of woven slit film geotextiles (i.e. geotextiles made from yarns of a flat, tape-like character) will not be allowed. Stabilizers and/or inhibitors shall be added to the base polymer, as needed, to make the filaments resistant to deterioration by ultraviolet light, oxidation, and heat exposure. Regrind material, which consists of edge trimmings and other scraps that have never reached the consumer, may be used to produce the geotextile. Post-consumer recycled material shall not be used. Geotextile shall be formed into a network such that the filaments or yarns retain dimensional stability relative to each other, including the edges. Geotextiles shall meet the requirements specified in Table 1. Where applicable, Table 1 property values represent minimum average roll values (MARV) in the weakest principal direction. Values for AOS represent maximum average roll values. The thickness of weight of material shall be as shown on the Drawings.

TABLE 1
MINIMUM PHYSICAL REQUIREMENTS FOR NON-WOVEN GEOTEXTILE

PROPERTY	UNITS	ACCEPTABLE VALUES	TEST METHOD
GRAB STRENGTH	LBS	160	ASTM D 4632
PUNCTURE	LBS	55	ASTM D 4833
TRAPEZOID TEAR	LBS	55	ASTM D 4533
APPARENT OPENING SIZE	U.S. SIEVE	No. 50	ASTM D 4751
PERMITTIVITY	SEC -1	2	ASTM D 4491
ULTRAVIOLET DEGRADATION	PERCENT	50 AT 500 HRS	ASTM D 4355

2.1.2 Woven Geotextile

Geotextile shall be a woven pervious sheet of polymeric material interlaced to form planer structure with uniform weave pattern and shall consist of long-chain synthetic polymers composed of at least 95 percent by weight polyolefins, polyesters, or polyamides. The use of woven slit film geotextiles (i.e. geotextiles made from yarns of a flat, tape-like character) will not be allowed. Stabilizers and/or inhibitors shall be

added to the base polymer, as needed, to make the filaments resistant to deterioration by ultraviolet light, oxidation, and heat exposure. Regrind material, which consists of edge trimmings and other scraps that have never reached the consumer, may be used to produce the geotextile. Post-consumer recycled material shall not be used. Geotextile shall be formed into a network such that the filaments or yarns retain dimensional stability relative to each other, including the edges. Geotextiles shall meet the requirements specified in Table 2. Where applicable, Table 1 property values represent minimum average roll values (MARV) in the weakest principal direction. Values for AOS represent maximum average roll values.

TABLE 2
MINIMUM PHYSICAL REQUIREMENTS FOR WOVEN GEOTEXTILE

PROPERTY	UNITS	ACCEPTABLE VALUES	TEST METHOD
GRAB STRENGTH	LBS	370	ASTM D 4632
WIDE WIDTH STRENGTH	LBS	225	ASTM D 4595
PUNCTURE	LBS	150	ASTM D 4833
TRAPEZOID TEAR	LBS	100	ASTM D 4533
APPARENT OPENING SIZE	U.S. SIEVE	70	ASTM D 4751
PERMITTIVITY	SEC -1	0.28	ASTM D 4491
ULTRAVIOLET DEGRADATION	PERCENT	50 AT 500 HRS	ASTM D 4355

2.1.3 Thread

Sewn seams shall be constructed with high-strength polyester, nylon, or other approved thread type. Thread shall have ultraviolet light stability equivalent to the geotextile and the color shall contrast with the geotextile. Durability shall be equal or greater than durability of geotextile sewn.

2.2 MANUFACTURING QUALITY CONTROL SAMPLING AND TESTING

The Manufacturer shall be responsible for establishing and maintaining a quality control program to assure compliance with the requirements of the specification. Documentation describing the quality control program shall be made available upon request. Manufacturing quality control sampling and testing shall be performed in accordance with the manufacturer's approved quality control manual. As a minimum, geotextiles shall be randomly sampled for testing in accordance with ASTM D 4354, Procedure A. Acceptance of geotextile shall be in accordance with ASTM D 4759. Tests not meeting the specified requirements shall result in the rejection of applicable rolls.

PART 3 EXECUTION

3.1 QUALITY ASSURANCE SAMPLES AND TESTS

3.1.1 Quality Assurance Samples

The Contractor shall provide assistance to the Contracting Officer in the collection of quality assurance samples. Samples shall be collected upon delivery to the site for quality assurance testing in accordance with ASTM D 4354, Procedure B. Lot size for quality assurance sampling shall be considered to be the shipment quantity of the product or a truckload of the product, whichever is smaller. The unit size shall be considered one roll of geotextile. Samples shall be identified with a waterproof marker by manufacturer's name, product identification, lot number, roll number, and machine direction. The date and a unique sample number shall also be noted on the sample. The outer layer of the geotextile roll shall be discarded prior to sampling a roll. Samples shall then be collected by cutting the full-width of the geotextile sheet a minimum of 3 feet long in the machine direction. Rolls which are sampled shall be immediately resealed in their protective covering.

3.1.2 Quality Assurance Tests

The Contractor shall provide quality assurance samples to an Independent Laboratory. Samples will be tested to verify that geotextile meets the requirements specified in Table 1. Test method ASTM D 4355 shall not be performed on the collected samples. Geotextile product acceptance shall be based on ASTM D 4759. Tests not meeting the specified requirements shall result in the rejection of applicable rolls.

3.2 INSTALLATION

3.2.1 Subgrade Preparation

The surface underlying the geotextile shall be smooth and free of ruts or protrusions which could damage the geotextile. Subgrade materials and compaction requirements shall be in accordance with Section 02300, EARTHWORK.

3.2.2 Placement

The Contractor shall notify the Contracting Officer a minimum of 24 hours prior to installation of geotextile. Geotextile rolls which are damaged or contain imperfections shall be repaired or replaced as directed. The geotextile shall be laid flat and smooth so that it is in direct contact with the subgrade. The geotextile shall also be free of tensile stresses, folds, and wrinkles. On slopes steeper than 10 horizontal on 1 vertical, the geotextile shall be laid with the machine direction of the fabric parallel to the slope direction.

3.3 SEAMS

3.3.1 Overlap Seams

Geotextile panels shall be continuously overlapped a minimum of 18 inches

at all longitudinal and transverse joints. Where seams must be oriented across the slope, the upper panel shall be lapped over the lower panel. If approved, sewn seams may be used instead of overlapped seams.

3.3.2 Sewn Seams

Factory and field seams shall be continuously sewn on all slopes steeper than 1 vertical on 3 horizontal. The stitch type used shall be a 401 locking chain stitch or as recommended by the manufacturer. For field and factory seams which are sewn, the Contractor shall provide at least a 2-meter sample of sewn seam before the geotextile is installed. For seams that are field sewn, the seams shall be sewn using the same equipment and procedures as will be used for the production seams. If seams are sewn in both the machine and cross machine direction, samples of seams from both directions shall be provided. Quality Assurance seam samples shall be provided to the Government at the request of the Contracting Officer. Seam strength shall meet the minimum requirements specified in Table 1. The thread at the end of each seam run shall be tied off to prevent unraveling. Skipped stitches or discontinuities shall be sewn with an extra line of stitching with a minimum of 18 inches of overlap.

3.4 PROTECTION

The geotextile shall be protected during installation from clogging, tears, and other damage. Damaged geotextile shall be repaired or replaced as directed. Adequate ballast (e.g. sand bags) shall be used to prevent uplift by wind. The geotextile shall not be left uncovered for more than 10 days after installation.

3.4.1 Securing Geotextile

a. Secure geotextile during installation as necessary with sandbags or other means approved by the Contracting Officer.

b. Secure Geotextile with Securing Pins:

1. Insert securing pins with washers through geotextile.
2. Securing Pin Alignment:
   a. Midway between edges of overlaps.
   b. 6 inches from free edges.
3. Spacing of Securing Pins:

Slope	Maximum Pin Spacing
Steeper than 3:1	2 feet
3:1 to 4:1	3 feet
Flatter than 4:1	5 feet

c. Install additional pins across each geotextile sheet as necessary to prevent slippage of geotextile or to prevent wind from blowing geotextile out of position.

d. Push each securing pin through geotextile until washer bears against geotextile and secures it firmly to subgrade.

3.5 REPAIRS

Torn or damaged geotextile shall be repaired. Clogged areas of geotextile shall be removed. Repairs shall be performed by placing a patch of the same type of geotextile over the damaged area. The patch shall extend a minimum of 12 inches beyond the edge of the damaged area. Patches shall be continuously fastened using approved methods. The machine direction of the patch shall be aligned with the machine direction of the geotextile being repaired. Geotextile rolls which cannot be repaired shall be removed and replaced. Repairs shall be performed at no additional cost to the Government.

3.6 PENETRATIONS

Engineered penetrations of the geotextile shall be constructed by methods recommended by the geotextile manufacturer.

3.7 COVERING

Geotextile shall not be covered prior to inspection and approval by the Contracting Officer. Cover soil material type, placement, compaction, and testing requirements are described in Section 02300, EARTHWORK.

-- End of Section --

SECTION TABLE OF CONTENTS

DIVISION 02 - SITE WORK

SECTION 02466

DRILLED FOUNDATION PIERS

PART 1 GENERAL

1.1 REFERENCES
1.2 SUBMITTALS
1.3 QUALIFICATIONS
1.3.1 Specialty Subcontractor
1.3.2 Welding
1.4 PROJECT/SITE CONDITIONS
1.4.1 Subsurface Data
1.4.2 Caisson Drilling Equipment
1.5 SEQUENCE OF WORK
1.5.1 Caisson Excavation
1.5.2 Acceptance
1.6 SUPERVISION, INSPECTION, AND SAFETY
1.6.1 Contractor Supervision
1.6.2 Government Inspection
1.6.3 Safety Precautions for Workmen and Inspectors
1.6.3.1 Life Line
1.6.3.2 Ventilation

PART 2 PRODUCTS

2.1 CONCRETE WORK
2.1.1 Bentonite Slurry
2.1.2 Reinforcing Steel
2.1.3 Strength
2.2 TEMPORARY SURFACE CASING

PART 3 EXECUTION

3.1 PREPARATION
3.2 INSTALLATION
3.3 TOLERANCES
3.4 PROTECTION

-- End of Section Table of Contents --

SECTION 02466

DRILLED FOUNDATION PIERS

PART 1 GENERAL

1.1 REFERENCES

The publications listed below form a part of this specification to the extent referenced. The publications are referred to in the text by basic designation only.

ASTM INTERNATIONAL (ASTM)

ASTM A 615/A 615M	(2001b) Deformed and Plain Billet-Steel Bars for Concrete Reinforcement

AMERICAN WELDING SOCIETY (AWS)

AWS D1.1	(2000) Structural Welding Code - Steel
AWS D1.4	(1998) Structural Welding Code - Reinforcing Steel

1.2 SUBMITTALS

Government approval is required for submittals with a "G" designation; submittals not having a "G" designation are for information only. When used, a designation following the "G" designation identifies the office that will review the submittal for the Government. The following shall be submitted in accordance with Section 01330 SUBMITTAL PROCEDURES:

SD-02 Shop Drawings

Caissons; G, RE

Detailed records in an approved form, for each caisson, showing shaft diameters, depths of test holes, top and bottom elevations, bearing strata description, casing description, water conditions, concrete strength, concrete volume, rock elevations, dates of excavation and concrete placement, and other pertinent information. Upon completion of caisson work, the Contractor shall provide a record of centerline locations based on the survey of the registered surveyor or engineer provided by the Contractor. In addition, corrective measures shall be similarly recorded. A complete tabulation of all records pertaining to approved caissons shall be delivered to the Contracting Officer.

SD-07 Certificates

Qualifications; G, RE

Qualifications of the foundation system Contractor shall show that he has been engaged in the successful installation of drilled foundation caissons for at least 5 years.

1.3 QUALIFICATIONS

1.3.1 Specialty Subcontractor

The work shall be performed by a specialty subcontractor, specializing in the specified foundation system and having experience installing the specified foundation system under similar subsurface conditions.

1.3.2 Welding

Detail and field welding shall be in accordance with AWS D1.1. Qualification of welding procedures, welders, and welding operators shall be in accordance with AWS D1.1, Section 5. Records of test results of welding procedures not prequalified and copies of records for each qualified welding operator, containing records on positions of welding and types of electrode qualifications, shall be kept by the Contractor and be available for examination by the Contracting Officer.

1.4 PROJECT/SITE CONDITIONS

1.4.1 Subsurface Data

Subsurface soil data logs are shown on the drawings. The subsurface investigation report and samples of materials, as taken from subsurface investigations, are available for examination by Contracting Officer.

1.4.2 Caisson Drilling Equipment

Caisson drilling equipment shall have the minimum torque capacity and downward force capacity for the contract site conditions.

1.5 SEQUENCE OF WORK

1.5.1 Caisson Excavation

Excavation of caissons or groups of caissons shall be performed so that reinforcing steel and concrete placement is a continuous operation performed the same day that the excavation is completed. Excavations shall not be left open overnight.

1.5.2 Acceptance

Concrete shall be placed within 3 hours after approval of the completed excavation.

1.6 SUPERVISION, INSPECTION, AND SAFETY

1.6.1 Contractor Supervision

The Contractor shall provide for the supervision of all phases of drilled pier construction. Supervision shall be the Contractor's responsibility as outlined in Quality Control provisions of the SPECIAL CONTRACT REQUIREMENTS. Each drilled pier excavation shall be checked by the Contractor for its depth, water removal, cleanup, workmanship, and for all tolerance requirements before any concrete is placed.

1.6.2 Government Inspection

The Contracting Officer will inspect each drilled pier excavation. Concrete shall not be placed until the excavation has been approved by the Contracting Officer. The Contractor shall furnish the Contracting Officer all necessary equipment required for proper inspection of drilled pier excavations.

1.6.3 Safety Precautions for Workmen and Inspectors

1.6.3.1 Life Line

Each person entering a drilled pier excavation shall be provided with a life line rigged so that the person can be immediately hoisted out of the excavation in an emergency. The life line shall be suitable for instant rescue, securely fastened to a shoulder harness, and separated from any line used to remove excavated materials. No person shall be lowered into a drilled pier excavation prior to casing the shaft through the overburden.

1.6.3.2 Ventilation

Each drilled pier excavation shall be provided with a ventilating device of sufficient capacity to assure a safe and healthy atmosphere before workmen and inspectors are permitted to enter the drilled pier excavation and during all work periods.

PART 2 PRODUCTS

2.1 CONCRETE WORK

Concrete work shall be in accordance with requirements of Section 03307 CONCRETE FOR MINOR STRUCTURES, as modified herein:

2.1.1 Bentonite Slurry

Mix design by Contractor with the following minimum requirements:

a. Viscosity (Measured by March Funnel, Seconds): 30 to 60.
b. Sand Content by Volume (Percent): 6, maximum.
c. pH: 8 to 12.
d. Density: Not less than that required to maintain positive head within excavation and prevent sidewall sloughing and such to allow proper displacement during concreting.

2.1.2 Reinforcing Steel

Reinforcing steel shall conform to ASTM A 615/A 615M Grade 60. Steel shall be welded into cages in accordance with AWS D1.4 and inserted securely in the caissons, in position and alignment, as shown, prior to concrete placement.

2.1.3 Strength

Concrete strength shall be 4,000 psi at 28 days. Slump shall be from 4 to 6 inches.

2.2 TEMPORARY SURFACE CASING

a. Provide to maintain sidewall stability and prevent caving, to exclude groundwater, and as otherwise may be required. Strength shall withstand handling stresses, concrete pressure, and surrounding earth and/or fluid pressures.

b. Steel Casing:

1. Inside Diameter: Not less than pier diameter.
2. Length: Extend from bottom of pier to above surrounding ground line.

PART 3 EXECUTION

3.1 PREPARATION

a. Caissons shall be excavated to established depths and dimensions shown. Bottoms of caissons shall be cleaned of loose or soft material and leveled. Excavated material shall be disposed of in accordance with Section 02300 EARTHWORK.

b. In drilling caissons, the surrounding soil and the earth walls shall be adequately and securely protected against cave-ins, displacement of the surrounding earth, and retention of ground water, by means of temporary steel casings. Casings shall have outside diameters not less than indicated shaft sizes, shall be a minimum of 1/4 inch thick, and shall not be removed if the structural integrity of the caisson will be impaired, as determined by the Contracting Officer. Temporary steel casings shall be withdrawn, as the concrete is being placed, maintaining sufficient head of concrete within the casing to prevent extraneous material from falling in from the sides and mixing with the concrete. Casings may be jerked upward a maximum of 4 inches to break the bottom seal, but thereafter shall be removed with a smooth, continuous motion.

c. The inside of steel casings shall be thoroughly cleaned and oiled before reuse.

d. The temporary casing shall be in place from the caisson top to the ground surface until the concrete has set if the elevation of the top of the caisson is below the adjacent ground surface.

e. Water that flows into the excavations shall be continuously removed and all water shall be removed from the excavation bottom, to the extent possible, prior to concrete placement. The maximum permissible depth of water will be 2 inches. In the event of a severe water condition that makes it impossible or impractical to dewater the excavation, concrete shall be placed using underwater tremie after water movement has stabilized.

f. Each caisson excavation will be inspected and approved by the Contracting Officer prior to placing concrete. A record of all inspections, with related construction changes, shall be kept by the Contractor. The Contractor shall provide support personnel for inspection and testing procedures.

3.2 INSTALLATION

a. Concrete shall be continuously placed by methods that ensure against segregation and dislodging of excavation sidewalls, and shall completely fill the shaft. Concrete shall be placed by pumping or drop chutes in dry holes and by tremie or pumping in wet holes. The discharge shall be kept a minimum of 3 feet below the fresh concrete surface during placement. Drilling of caissons or driving of casings shall not be within 20 feet of concrete placed within the last 3 days.

b. Concrete shall be brought to a true level surface inside the shaft and a full width cross key formed, or dowels installed, should it become necessary to interrupt placing concrete in any caisson. Prior to placing additional concrete, surfaces shall be cleaned of laitance and slush with one-to-one portland cement grout. The grout shall have a water-cement ratio not exceeding that of the concrete.

c. Concrete in dry batter caissons shall be placed with a drop chute extending within 3 feet of the concrete surface in the excavation.

d. Concrete shall be vibrated for full height of caisson.

3.3 TOLERANCES

a. Any caisson out of center or plumb beyond the tolerance specified shall be corrected as necessary to comply with the tolerances and the Contractor shall bear any cost of correction.

b. Cross sections of shafts and bells shall not be less than design dimensions.

c. Caissons shall be installed with top location deviating a maximum of 3 inches from centerline locations.

d. Vertical caissons shall be installed plumb within a maximum of 1-1/2 inches for the first 10 feet and within l/2 inch for each 10 feet of additional depth.

3.4 PROTECTION

Protection shall be provided around top of the excavation to prevent debris from being dislodged into the excavation and concrete.

-- End of Section --

SECTION TABLE OF CONTENTS

DIVISION 02 - SITE WORK

SECTION 02510

WATER SUPPLY AND DISTRIBUTION SYSTEM PIPELINES

PART 1 GENERAL

1.1 REFERENCES
1.2 SYSTEM DESCRIPTION
1.2.1 Design Requirements
1.2.2 Performance Requirements
1.2.3 Buried Piping Systems
1.2.4 Above Grade Piping Systems
1.3 SUBMITTALS
1.4 QUALIFICATIONS
1.4.1 Contractor
1.5 GENERAL JOB REQUIREMENTS
1.5.1 Components
1.5.2 Standard Products
1.6 DELIVERY, STORAGE AND HANDLING
1.7 PROJECT/SITE CONDITIONS
1.7.1 Existing Conditions
1.7.2 Verification of Dimensions

PART 2 PRODUCTS

2.1 MANUFACTURER'S CERTIFICATION
2.2 PIPE AND EQUIPMENT
2.2.1 Ductile-Iron Pipe
2.2.2 PVC Plastic Pipe
2.2.3 HDPE Pipe
2.2.4 Di-electric Insulating Flanges, Couplings and Unions
2.3 FITTINGS AND SPECIALS
2.3.1 Ductile-Iron Pipe System
2.3.2 Ductile-Iron Pipe Jointing
2.3.3 PVC Pipe System
2.3.4 PVC Pipe
2.3.5 HDPE Pipe System
2.3.6 High Density Polyethylene Piping
2.3.7 Flanges
2.3.8 Link Seal Pipe Penetrations
2.3.9 Corrugated HDPE Pipe Jacket
2.3.10 Pipe Material Transition Adapters
2.4 VALVES
2.4.1 Check Valves
2.4.2 Gate Valves
2.4.3 Rubber-Seated Butterfly Valves
2.4.4 Combination Air Release Valves (ARV)
2.4.5 Ball Valves
2.5 VALVE BOXES

2.6 VALVE AND METER VAULTS
2.7 TAPPING SLEEVES AND VALVES
2.7.1 Tapping Valves
2.7.2 Tapping Sleeves
2.8 CIRCULAR ISOLATION SLUICE GATES

PART 3 EXECUTION

3.1 INSTALLATION
3.1.1 Distribution System Water and Raw Water Lines
3.1.2 Nonferrous Metallic Pipe
3.1.3 Casing Pipe
3.1.4 Joint Deflection
3.1.5 Allowable for Ductile-Iron Pipe
3.1.6 Placing and Laying
3.1.7 Piping Connections
3.1.8 Penetrations
3.1.9 Flanged Pipe
3.1.10 Jointing
3.1.10.1 Ductile-Iron Pipe Requirements
3.1.10.2 Insulating Joints
3.1.11 Thrust Restraint
3.1.12 Restrained Joints
3.2 TESTING
3.3 CLEANUP
3.4 Assistance and Training

-- End of Section Table of Contents --

SECTION 02510

WATER SUPPLY AND DISTRIBUTION SYSTEM PIPELINES

PART 1 GENERAL

1.1 REFERENCES

The publications listed below form a part of this specification to the extent referenced. The publications are referred to in the text by basic designation only.

ASME INTERNATIONAL (ASME)

ASME B16.1	(1998) Cast Iron Pipe Flanges and Flanged Fittings

ASTM INTERNATIONAL (ASTM)

ASTM A 36/A 36M	(2001) Carbon Structural Steel
ASTM A 276	(2000ael) Stainless Steel Bars and Shapes
ASTM D 1784	(1999a) Rigid Poly(Vinyl Chloride) (PVC) Compounds and Chlorinated Poly(Vinyl Chloride) (CPVC) Compounds
ASTM D 1785	(1999) Poly(Vinyl Chloride) (PVC) Plastic Pipe, Schedules 40, 80, and 120
ASTM D 2467	(2001) Poly(Vinyl Chloride) (PVC) Plastic Pipe Fittings, Schedule 80
ASTM D 2564	(1996a) Solvent Cements for Poly(Vinyl Chloride) (PVC) Plastic Piping Systems
ASTM D 3261	(1997) Butt Heat Fusion Polyethylene (PE) Plastic Fittings for Polyethylene (PE) Plastic Pipe and Tubing
ASTM D 3350	(2002) Polyethylene Plastics Pipe and Fittings Materials
ASTM D 3892	(1993; R 1998) Packaging/Packing of Plastics
ASTM F 402	(1993; R 1999) Safe Handling of Solvent Cements, Primers, and Cleaners Used for Joining Thermoplastic Pipe and Fittings

ASTM F 714	(2001) Polyethylene (PE) Plastic Pipe (SDR-PR) Based on Outside Diameter

AMERICAN WATER WORKS ASSOCIATION (AWWA)

AWWA C104	(1995) Cement-Mortar Lining for Ductile-Iron Pipe and Fittings for Water
AWWA C105	(1999) Polyethylene Encasement for Ductile-Iron Pipe Systems
AWWA C110	(1998) Ductile-Iron and Gray-Iron Fittings, 3 in. through 48 in. (75 mm through 1200 mm), for Water and Other Liquids
AWWA C111	(2000) Rubber-Gasket Joints for Ductile-Iron Pressure Pipe and Fittings
AWWA C115	(1999) Flanged Ductile-Iron Pipe with Ductile-Iron or Gray-Iron Threaded Flanges
AWWA C151	(1996) Ductile-Iron Pipe, Centrifugally Cast, for Water or Other Liquids
AWWA C153	(2000) Ductile-Iron Compact Fittings, 3 In. Through 24 In. (76 mm through 610 mm) and 54 In. through 64 In. (1,400 mm through 1,600 mm) for Water Service
AWWA C200	(1997) Steel Water Pipe - 6 in. (150 ml) and Larger
AWWA C504	(2000) Rubber-Seated Butterfly Valves
AWWA C508	(2001) Swing-Check Valves for Waterworks Service, 2 In. (50 mm) Through 24 In. (600 mm) NPS
AWWA C509	(2001) Resilient-Seated Gate Valves for Water-Supply Service
AWWA C515	(2001) Reduced-Wall, Resilient-Seated Gate Valves for Water Supply Service
AWWA C600	(1999) Installation of Ductile-Iron Water Mains and Their Appurtenances

MANUFACTURERS STANDARDIZATION SOCIETY OF THE VALVE AND FITTINGS INDUSTRY (MSS)

MSS SP-58	(1993) Pipe Hangers and Supports - Materials, Design and Manufacture

MSS SP-69	(1996) Pipe Hangers and Supports - Selection and Application
MSS SP-80	(1997) Bronze Gate, Globe, Angle and Check Valves
MSS SP-89	(1998) Pipe Hangers and Supports - Fabrication and Installation Practices

NATIONAL FIRE PROTECTION ASSOCIATION (NFPA)

NFPA 49	(1994) Hazardous Chemicals Data
NFPA 325-1	(1994) Fire Hazard Properties of Flammable Liquids, Gases, and Volatile Solids
NFPA 704	(2001) Identification of the Fire Hazards of Materials for Emergency Response

U.S. NATIONAL ARCHIVES AND RECORDS ADMINISTRATION (NARA)

29 CFR 1910	Occupational Safety and Health Standards

1.2 SYSTEM DESCRIPTION

This specification covers the requirements for above and below grade water supply and distribution pipe, pipe supports, fittings, equipment, and accessories located within the project boundaries.

1.2.1 Design Requirements

Support systems shall be selected and designed in accordance with MSS SP-58, MSS SP-69, and MSS SP-89 within the specified spans and component requirements. The absence of pipe supports and details on the contract Drawings does not relieve the Contractor of responsibility for sizing and providing supports throughout facility.

1.2.2 Performance Requirements

The pressure ratings and materials specified represent minimum acceptable standards for piping systems. The piping systems shall be suitable for the service specified and intended. Each piping system shall be coordinated to function as a unit. Flanges, valves, fittings and appurtenances shall have a pressure rating no less than the required for the system in which they are installed.

1.2.3 Buried Piping Systems

Piping systems shall be suitable for design conditions, considering the piping both with and without internal pressure. Consideration shall be given to all operating and service conditions both internal and external to the piping systems.

1.2.4 Above Grade Piping Systems

Piping systems shall be suitable for design conditions, considering the piping both with and without internal pressure, and installation factors such as insulation, support spans, and ambient temperatures. Consideration shall be given to all operating and service conditions both internal and external to the piping systems.

1.3 SUBMITTALS

Government approval is required for submittals with a "G" designation; submittals not having a "G" designation are for information only. When used, a designation following the "G" designation identifies the office that will review the submittal for the Government. The following shall be submitted in accordance with Section 01330 SUBMITTAL PROCEDURES:

SD-02 Shop Drawings

Pipe and Equipment

Equipment shop Drawings and support system detail Drawings showing piping systems and appurtenances, such as mechanical joints, valves, local indicators and hangers, including a complete list of equipment and materials. As-built Drawings showing pipe anchors and guides, and layout of piping systems relative to other parts of the work including clearances for maintenance and operation. As-built piping and instrumentation diagrams (P&IDs) identifying and labeling equipment, instrumentation, valves, vents, drains, and all other inline devices; if the contract Drawings contained P&IDs, the P&IDs found in the contract Drawings shall be revised to reflect the constructed process system, as directed by the Contracting Officer.

Manufacturer's descriptive and technical literature for each piping system, including design recommendations; pressure and temperature ratings; dimensions, type, grade and strength of pipe and fittings; thermal characteristics (coefficient of expansion and thermal conductivity); and chemical resistance to each chemical and chemical mixture in the liquid stream; and galvantic compatibility of insulating flanges.

SD-03 Product Data

Assistance and Training

A signed statement certifying that the installation is satisfactory and in accordance with the contract Drawings and specifications and the manufacturer's prescribed procedures and techniques, upon completion of the project and before final acceptance.

Delivery, Storage and Handling

Material safety data sheets.

SD-07 Certificates

Manufacturer's Certification

Provide Manufacturer's Certification that the product has been constructed in accordance with required specification.

1.4 QUALIFICATIONS

1.4.1 Contractor

Contractor shall have successfully completed at least 3 projects of the same scope and size or larger within the last 6 years. Contractor shall demonstrate specific experience in regard to the system installation to be performed.

1.5 GENERAL JOB REQUIREMENTS

Piping materials and appurtenances shall be as specified and as shown on the Drawings, and shall be suitable for the service intended. Piping materials, appurtenances and equipment supplied as part of this contract shall be new and unused except for testing equipment. Components that serve the same function and are the same size shall be identical products of the same manufacturer. The general materials to be used for the piping systems are indicated by service in the Contract Drawings.

1.5.1 Components

Piping equipment and appurtenances shall be new products of equal material and ratings as the connecting pipe.

1.5.2 Standard Products

Material and equipment shall be the standard products of a manufacturer regularly engaged in the manufacturing of the products and shall essentially duplicate items that have been in satisfactory use for at least 2 years prior to bid opening. Nominal sizes for standardized products shall be used. Pipe, valves, fittings and appurtenances shall be supported by a service organization that is, in the opinion of the Contracting Officer, reasonably convenient to the site.

1.6 DELIVERY, STORAGE AND HANDLING

Materials delivered and placed in storage shall be stored with protection from the weather, excessive humidity variation, excessive temperature variation, dirt, dust and/or other contaminants. Proper protection and care of material before, during and after installation is the Contractor's responsibility. Any material found to be damaged shall be replaced at the Contractor's expense. During installation, piping shall be capped to keep out dirt and other foreign matter. A material safety data sheet in conformance with 29 CFR 1910 Section 1200(g) shall accompany each chemical delivered for use in pipe installation. At a minimum, this includes all solvents, solvent cements, glues and other materials that may contain hazardous compounds. Handling shall be in accordance with ASTM F 402.

Storage facilities shall be classified and marked in accordance with NFPA 704, with classification as indicated in NFPA 49 and NFPA 325-1. Materials shall be stored with protection from puncture, dirt, grease, moisture, mechanical abrasions, excessive heat, ultraviolet (UV) radiation damage, or other damage. Pipe and fittings shall be handled and stored in accordance with the manufacturer's recommendation. Plastic pipe shall be packed, packaged and marked in accordance with ASTM D 3892.

1.7 PROJECT/SITE CONDITIONS

1.7.1 Existing Conditions

The Contractor shall be responsible for the verification of existing piping and penetrations. Prior to ordering materials, the Contractor shall expose all existing pipes which are to be connected to new pipelines. The Contractor shall verify the size, material, joint types, elevation, horizontal location, and pipe service of existing pipes, and inspect size and location of structure penetrations to verify adequacy of wall sleeves, and other openings before installing connecting pipes.

1.7.2 Verification of Dimensions

After becoming familiar with all details of the work, the Contractor shall verify all dimensions in the field, and shall advise the Contracting Officer of any discrepancy before performing the work.

PART 2 PRODUCTS

2.1 MANUFACTURER'S CERTIFICATION

Certification of Manufacturer's compliance shall be provided for all products in this section.

2.2 PIPE AND EQUIPMENT

Pipe shall conform to the respective specifications and other requirements specified below.

2.2.1 Ductile-Iron Pipe

Ductile-iron pipe shall have a pressure rating of 350 psi. Mechanical joint pipe shall have a wall thickness equivalent to a Pressure Class 350 wall thickness as listed in AWWA C151. Flanged joint pipe shall have a wall thickness of Special Thickness Class 53 as listed in AWWA C151. Pipe shall be cement-mortar lined and asphaltic sealed in accordance with AWWA C104. Linings shall be standard. When installed underground, pipe shall be encased with 8 mil thick linear low-density polyethylene in accordance with AWWA C105. Flanged ductile iron pipe with threaded flanges shall be in accordance with AWWA C115.

2.2.2 PVC Plastic Pipe

PVC Pipe, couplings and fittings shall be Schedule 80, Type I, Class 12454-B conforming to ASTM D 1784 and ASTM D 1785. Pipe shall be

manufactured with 2 percent titanium dioxide for ultraviolet protection.

2.2.3 HDPE Pipe

HDPE pipe shall conform to ASTM D 3350, high density polyethylene, and have a maximum allowable hoop stress of 800 psi at 73.4 degrees F. Polyethylene resins shall conform to Type PE 3408 or better. Protection shall be provided against ultraviolet light degradation using carbon black, not less than 2 percent well dispersed in the resin. Pipe wall thickness shall be SDR 11 in accordance with ASTM F 714. Minimum pressure rating shall be 160 psi at 73 degrees F and 126 psi at 100 degrees F. Design Stress Rating shall be 800 psi hydrostatic, in accordance with ASTM F 714.

2.2.4 Di-electric Insulating Flanges, Couplings and Unions

Complete assembly shall have a rating equal to or higher than that of the adjoining pipe and joint. Assembly shall be galvanically compatible with piping, resistant for intended exposure, operating temperatures, and service liquid.

2.3 FITTINGS AND SPECIALS

2.3.1 Ductile-Iron Pipe System

Ductile-iron, compact fittings used with ductile iron pipe shall be in accordance with AWWA C153, 350 psi minimum working pressure. Mechanical joint fittings shall be in accordance with AWWA C110 and AWWA C111. Fittings and specials shall be cement-mortar lined (standard thickness) and asphaltic sealed in accordance with AWWA C104.

2.3.2 Ductile-Iron Pipe Jointing

a. Mechanical joints shall be of the stuffing box and gland type with a rubber gasket being compressed by the gland and shall conform to AWWA C111.

b. Push-on joints shall conform to AWWA C111.

c. Rubber gaskets and lubricants shall conform to the applicable requirements of AWWA C111.

d. Restrained joint shall be a Manufacturer's proprietary joint that mechanically restrains pipe to adjoining pipe.

e. Mechanical Wedge Action Type Joint:

1. Use only in areas where adjoining to fixed points where laying length is determined in field.
2. Prior to purchase and installation, type and application of this joint shall be approved by Contracting Officer.

f. Use of set screws for restraint or field lock gaskets shall not be allowed.

g. Flanged fittings shall be faced and drilled, 125-pound flat face or ASME B16.1, 250-pound raised face, and shall conform to AWWA C110. Flange gaskets shall be full face for 125-pound flat-faced flanges, flat-ring type for 250-pound raised-face flanges. Blind flanges shall be gasketed covering the entire inside face with the gasket cemented to the blind flange. Gasket pressure rating shall equal or exceed the system hydrostatic test pressure.

2.3.3 PVC Pipe System

For pipe less than 4 inch diameter, fittings for solvent cement jointing shall conform to ASTM D 2467. Solvent cement shall be as recommended by the pipe and fitting manufacturer conforming to ASTM D 2564.

2.3.4 PVC Pipe

Joints, fittings, and couplings shall be as specified for PVC pipe. Joints connecting pipe of differing materials shall be made in accordance with the manufacturer's recommendations, and as approved by the Contracting Officer.

2.3.5 HDPE Pipe System

Pipe lengths, fittings, and flanged connections to be joined by thermal butt-fusion shall be of the same type, grade, and class of polyethylene compound and supplied from the same raw material supplier. Gaskets shall be flat ring, 1/8 inch ethylene propylene rubber (EPR). HDPE fittings 6 inches and smaller shall be molded fittings, butt fusion joined, conforming to ASTM D 3261. HDPE fittings 8 inches and larger shall be molded or mitered fittings, butt fusion joined and conform to ASTM D 3350. HDPE Pipe Placement:

a. Lay pipe snaking from one side of trench to other.

b. Offset: As recommended by manufacturer for maximum temperature variation between time of solvent welding and during operation.

c. Do not lay pipe when temperature is below 40 degrees F, or above 90 degrees F when exposed to direct sunlight.

d. Shield ends to be joined from direct sunlight prior to and during the laying operation.

2.3.6 High Density Polyethylene Piping

a. Join pipes, fittings, and flange connections by means of thermal butt-fusion.

b. Butt fusion shall be performed in accordance with pipe manufacturer's recommendations as to equipment and technique.

c. Special Precautions at Flanges: Polyethylene pipe connected to heavy fittings, manholes, and rigid structures shall be supported in such a manner that no subsequent relative movement between polyethylene pipe at flanged joint and rigid structures is

possible.

2.3.7 Flanges

Full face for 125-pound flat-faced flanges, flat-ring type for 250-pound raised-face flanges. Adapter flange shall be UNIFLANGE Series 900 or approved equal.

2.3.8 Link Seal Pipe Penetrations

Type: Interconnected synthetic rubber links shaped and sized to continuously fill annular space between pipe and wall sleeve opening.

Fabrication: Assemble interconnected rubber links with ASTM A 276, Type 316 stainless steel bolts, nuts, and pressure plates.

Size: According to manufacturer's instructions for the size of pipes shown to provide a watertight seal between pipe and wall sleeve opening, and to withstand a hydrostatic head of 40 feet of water.

Grout: Fill both sides of openings on sides of link seals with pre-shrunk grout as shown on Detail 1M.

2.3.9 Corrugated HDPE Pipe Jacket

Corrugated HDPE pipe jackets shall be applied to piping as shown on the drawings. Jacket internal profile shall be smooth (Type S and D). Joints shall be bell and spigot, gasketed type and water-tight. Fittings shall be manufacturer's standard with identical stiffness as adjacent pipe. Jacket ends shall be sealed with non-shrink grout.

2.3.10 Pipe Material Transition Adapters

a. Ductile iron mechanical joint anchoring kits shall be used at transition points between ductile iron and HDPE pipe as shown on the drawings. The anchoring kits shall include HDPE anchor fittings, metal drive ring, longer tee-bolts, rubber gasket, and stiffener. The anchor fittings shall be equipped with a cast gland and rotating ring gland.

b. Mechanical joint adapter kits shall be used at transition points between HDPE and PVC. The adapter kits shall include HDPE bell MJ fitting with stainless steel reinforcing collar, gland ring, gasket, and extra length T-bolts.

2.4 VALVES

2.4.1 Check Valves

Check valves shall be resilient-seat, rated for 200 psi working pressure. Valves shall have a clear waterway equal to the full nominal diameter of the valve. Valves shall open to permit flow when inlet pressure is greater than the discharge pressure, and shall close tightly to prevent return flow when discharge pressure exceeds inlet pressure. The size of the valve,

working pressure, manufacturer's name, initials, or trademark shall be cast on the body of each valve. Valves 2 inches and larger shall be outside lever and spring.

a. Valves 2 inches and smaller shall be all bronze designed for screwed fittings, and shall conform to MSS SP-80, Class 150, Types 3 and 4 as suitable for the application.

b. Valves larger than 2 inches shall be iron body, bronze mounted, stainless steel hinge shaft, and shall have flanged ends, and shall be the non-slam type. In conformance with AWWA C508, flanges shall be the Class 125 type conforming to ASME B16.1.

2.4.2 Gate Valves

Gate valves shall be seat, designed for a working pressure of not less than 250 psi. Valve connections shall be as required for the piping in which they are installed. Valves shall have a clear waterway equal to the full nominal diameter of the valve, and shall be opened by turning counterclockwise. The operating nut or wheel shall have an arrow, cast in the metal, indicating the direction of opening.

a. Valves smaller than 3 inches shall be all bronze and shall conform to MSS SP-80, Type 1, Class 150.

b. Valves 3 inches and larger shall have a ductile iron wedge encapsulated with rubber and shall conform to the performance requirements of AWWA C509 or AWWA C515. Flanges shall not be buried. An approved pit shall be provided for all flanged connections. Valve bodies shall match adjoining pipe materials.

2.4.3 Rubber-Seated Butterfly Valves

Rubber-seated butterfly valves shall conform to the performance requirements of AWWA C504. Wafer type valves conforming to the performance requirements of AWWA C504 in all respects, but not meeting laying length requirements will be acceptable if supplied and installed with a spacer providing the specified laying length. All tests required by AWWA C504 shall be met. Flanged-end valves shall be installed in an approved pit and provided with a union or sleeve-type coupling in the pit to permit removal. Mechanical-end valves 3 through 10 inches in diameter may be direct burial if provided with a suitable valve box, means for manual operation, and an adjacent pipe joint to facilitate valve removal. Valve operators shall restrict closing to a rate requiring approximately 60 seconds, from fully open to fully closed. Materials of construction, for valve bodies, shall match adjoining piping.

2.4.4 Combination Air Release Valves (ARV)

a. Suitable for water service, combines the operating features of both an air and vacuum valve and air release valve. Air and vacuum portion to automatically exhaust air during filling of system and allow air to re-enter during draining or when vacuum occurs. The air release portion to automatically exhaust

entrained air that accumulates in system.

b. Rated 180 psi working pressure, 250 psi maximum pressure.

c. Valves shall be iron or stainless steel body with bronze trim and stainless float.

2.4.5 Ball Valves

Ball valves 2 inches and smaller shall be rated for 150 psi working pressure. Valves shall be all bronze, end entry type, RTFE seats, Teflon packing, hand lever operator.

2.5 VALVE BOXES

Valve boxes shall be lockable and constructed of cast iron or concrete, except that concrete boxes may be installed only in locations not subjected to vehicular traffic. Cast-iron boxes shall be extension type with slide-type adjustment and with flared base. The minimum thickness of metal shall be 3/16 inch. Concrete boxes shall be the standard product of a manufacturer of precast concrete equipment. The word "WATER" shall be cast in the cover. The box length shall adapt, without full extension, to the depth of cover required over the pipe at the valve location.

2.6 VALVE AND METER VAULTS

Valve and meter vaults shall be lockable and constructed at locations indicated on the project design drawings in accordance with the project details. Concrete shall have a compressive strength of 3000 psi.

2.7 TAPPING SLEEVES AND VALVES

2.7.1 Tapping Valves

Tapping Valves shall be identical in construction with the above specifications for potable water gate valves. Tapping sleeves are considered an integral part of a tapping sleeve and valve assembly, with openings the same as the valve. Tapping valves shall have ends and seat rings of sufficient size to permit the use of full size cutters of either the Mueller or Smith type tapping machines. Tapping sleeve valves shall be flanged on one end to fit the tapping sleeve and a flange hub-end or mechanical joint on the other.

The tapping valve shall be so constructed that the inside diameter of the valve flow opening shall be at least 3/16-inch larger than the nominal size of the valve.

Once the tap has been completed, the Contractor shall not operate the valve unless under direct observation of the Contracting Officer.

2.7.2 Tapping Sleeves

Tapping sleeves shall be of extra heavy construction to provide resistance to line pressures. They shall be built in two halves for assembly around

the main to be tapped.

The branch outlet shall have a flanged face for bolting to the tapping valve.

The inside diameter of the outlet branch shall be sufficiently larger than the nominal size to provide clearance for the full size cutters of the tapping machine.

Tapping sleeves shall be of the following types:

a. Tapping sleeves for pipelines constructed of cast iron, ductile iron or asbestos cement:

b. Unless otherwise noted, the tapping sleeve assembly shall be pressure tested to 200 psi for a minimum of 30 minutes. the pressure test shall occur prior to tapping the main.

1. Tapping sleeves in which the water is allowed to circulate between the sleeve and the outside surface shall comply to the following:

a) Gaskets of approved material shall be provided from watertight joints along the entire length of the sleeve. the circumferential joints at the ends of the run of these sleeves shall be sealed by mechanical joints. Mechanical joints shall conform to the requirements set forth in AWWA C111 as to dimensions, clearance, materials, etc. except the gaskets and glands for mechanical joints shall be in two pieces.

b) The longitudinal gaskets shall be totally confined or compressed between ridges and/or grooves extending continuously for the full length of both halves of the sleeve casting. Bolts shall be located close to the outside of the gaskets and closely spaced so as to exert sufficient pressure to form a watertight joint and to amply take care of any design stresses.

2. Tapping sleeves in which the water is confined to the immediate area of the tap opening may be either of the following:

a) Cast Iron - The outlet half of each sleeve shall be fitted with a continuous gasket of approximately circular cross section permanently cemented into a groove surrounding the outlet opening. The back half of each sleeve shall be fitted with elastomeric pads, a metal shoe, or other device for developing adequate pressure on the gasket to prevent leakage at any pressure within the design capacity of the pipe. The sleeve shall be similar in construction to the Kennedy Square Seal or Rich-Corey improved sleeve.

b) Stainless Steel, Type 304 - All integral metal parts of the sleeve shall be stainless steel, type 304. All welds shall be chemically treated and the residue removed so as to return the welded stainless steel to its original corrosion resistant state.

The sleeves shall be capable of withstanding 125 ft-lbs of bolting torque without deformation of any sleeve components. Actual bolting torque during installation shall be as specified by the manufacturer.

c) All gaskets shall be of virgin styrene butadiene rubber (SBR), or equal, compound for water services. The complete circle gasket shall be 1/4 inch +/- 0.03 thick and permanently attached to the sleeve. A dielectric insulating flange insulation kit shall be installed between the stainless steel flange and the cast iron valve. The kit shall contain full faced gaskets, full length sleeves, and single insulating washers. Insulation gasket material shall be neoprene-faced phenolic, insulation sleeves shall be mylar or minlon and full length, insulation washers shall be phenolic, or approved equal. All insulation material shall be of a type designated by the manufacturer as suitable for service at the operation temperatures and pressure specified.

2.8 CIRCULAR ISOLATION SLUICE GATES

a. Provide one circular isolation sluice gate for each water distribution pumping wet well. Gate shall be mounted directly to the intake pipe at each wet well.

b. Gates and operators shall be supplied with all the necessary parts and accessories indicated on the drawings, specified or otherwise required for a complete, properly operating installation, and shall be the latest standard product of a manufacturer regularly engaged in the production of fabricated gates.

c. Sluice gates shall be substantially watertight under the design head conditions. Leakage shall not exceed 0.001 gallon per minute per foot of periphery under the design seating head of 60 feet.

d. Gates shall be self-contained, of the non-rising stem configuration. Gate frame shall be constructed of structural members or formed plate, welded to form one rigid frame. The frame shall be of the flange back design suitable for mounting on a standard flange. Gates shall be equipped with guides to engage the slide on the frame. Gates shall be equipped with operating stem, stem guides, stem cover, and operator. Each manual operator shall be designed to operate the gate under the maximum seating and shall be able to withstand, without damage, an effort of 80 lb.

e. Gates, stem guides, and frames shall be constructed of 304 SST. Gates shall be equipped with resilient neoprene seal attached to the frame with a stainless steel ring.

PART 3 EXECUTION

3.1 INSTALLATION

3.1.1 Distribution System Water and Raw Water Lines

Distribution System Water and Raw Water Lines shall not be laid in the same trench with sewer lines, gas lines, or fuel lines.

3.1.2 Nonferrous Metallic Pipe

Where nonferrous metallic pipe, e.g. copper tubing, crosses any ferrous piping material, a minimum vertical separation of 12 inches shall be maintained between pipes.

3.1.3 Casing Pipe

Water pipe shall be encased in a sleeve of rigid conduit for the lengths shown. Where sleeves are required, in all other cases, the pipe sleeve shall be steel, manufactured in accordance with AWWA C200, ASTM A 36/A 36M, with a minimum wall thickness of 3/8 inches. A minimum clearance of at least 2 inches between the inner wall of the sleeve and the maximum outside diameter of the sleeved pipe and joints shall be provided. Sand bedding or suitable pipe support shall be provided for the water pipe through the sleeve.

3.1.4 Joint Deflection

3.1.5 Allowable for Ductile-Iron Pipe

The maximum allowable deflection shall be as given in AWWA C600. If the alignment requires deflection in excess of the above limitations, special bends or a sufficient number of shorter lengths of pipe shall be furnished to provide angular deflections within the limit set forth.

3.1.6 Placing and Laying

Pipe and accessories shall be carefully lowered into the trench by means of derrick, ropes, belt slings, or other authorized equipment. Water-line materials shall not be dropped or dumped into the trench. Abrasion of the pipe coating shall be avoided. Except where necessary in making connections with other lines or as authorized by the Contracting Officer, pipe shall be laid with the bells facing in the direction of laying. The full length of each section of pipe shall rest solidly upon the pipe bed, with recesses excavated to accommodate bells, couplings, and joints. Pipe that has the grade or joint disturbed after laying shall be taken up and relaid. Pipe shall not be laid in water or when trench conditions are unsuitable for the work. Water shall be kept out of the trench until joints are complete. When work is not in progress, open ends of pipe, fittings, and valves shall be securely closed so that no trench water, earth, or other substance will enter the pipes or fittings. Where any part of the coating or lining is damaged, the repair shall be made by and at the Contractor's expense in a satisfactory manner. Pipe ends left for future connections shall be valved, plugged, or capped, and anchored, as shown.

3.1.7 Piping Connections

Where connections are made between new work and existing mains, the connections shall be made by using specials and fittings to suit the actual conditions. When made under pressure, these connections shall be installed

using standard methods as approved by the Contracting Officer.

3.1.8 Penetrations

Pipe passing through walls of valve pits and structures shall be provided with ductile-iron or Schedule 40 steel wall sleeves. Annular space between walls and sleeves shall be filled with rich cement mortar. Annular space between pipe and sleeves shall be filled with mastic.

3.1.9 Flanged Pipe

Flanged pipe shall only be installed above ground or with the flanges in valve pits.

3.1.10 Jointing

3.1.10.1 Ductile-Iron Pipe Requirements

Mechanical and push-on type joints shall be installed in accordance with AWWA C600 for buried lines.

3.1.10.2 Insulating Joints

Provide insulating (di-electric) joints at all changes in pipe materials, whether connecting to pipe or piping accessories.

3.1.11 Thrust Restraint

Plugs, caps, tees and bends deflecting 11.25 degrees or more, either vertically or horizontally, on ductile iron waterlines 4 inches in diameter or larger shall be provided with manufacturer's proprietary restraint joints. Valves shall be securely anchored or shall be provided with thrust restraints to prevent movement.

3.1.12 Restrained Joints

For ductile-iron pipe, restrained joint lengths shall be provided as indicated on the drawings. Flexible connections on restrained pipe shall be restrained whether or not shown on drawings.

3.2 TESTING

Piping Leakage Testing shall be in accordance with Section 15955, PIPING LEAKAGE TESTING.

3.3 CLEANUP

Upon completion of the installation of water lines, and appurtenances, all debris and surplus materials resulting from the work shall be removed.

3.4 Assistance and Training

The Contractor shall provide manufacturer's technical assistance for Contractor training, installation inspection, start up, and owner operating

and maintenance training. The Contractor shall follow manufacturer's instructions for installation.

-- End of Section --

SECTION TABLE OF CONTENTS

DIVISION 02 - SITE WORK

SECTION 02630

STORM-DRAINAGE SYSTEM

PART 1 GENERAL

1.1 REFERENCES
1.2 SUBMITTALS
1.3 DELIVERY, STORAGE, AND HANDLING
1.3.1 Delivery and Storage
1.3.2 Handling

PART 2 PRODUCTS

2.1 PIPE FOR CULVERTS AND STORM DRAINS
2.1.1 Concrete Pipe
2.1.2 Corrugated Metal Pipe
2.1.3 Corrugated PE Pipe
2.2 DRAINAGE STRUCTURES
2.2.1 Flared End Sections
2.3 MISCELLANEOUS MATERIALS
2.3.1 Concrete
2.3.2 Mortar
2.3.3 Brick
2.3.4 Precast Reinforced Concrete Manholes
2.3.5 Frame and Cover for Gratings
2.3.6 Joints
2.3.6.1 Flexible Watertight Joints
2.3.6.2 External Sealing Bands
2.3.6.3 Flexible Watertight, Gasketed Joints
2.4 RESILIENT CONNECTORS

PART 3 EXECUTION

3.1 EXCAVATION FOR PIPE CULVERTS, STORM DRAINS, AND DRAINAGE STRUCTURES
3.2 BEDDING
3.2.1 Plastic Pipe
3.3 PLACING PIPE
3.3.1 Concrete
3.3.2 Corrugated PE Pipe
3.3.3 Corrugated Metal Pipe
3.3.4 Multiple Culverts
3.4 JOINTING
3.4.1 Concrete Pipe
3.4.1.1 Cement-Mortar Bell-and-Spigot Joint
3.4.1.2 Cement-Mortar Oakum Joint for Bell-and-Spigot Pipe
3.4.1.3 Cement-Mortar Diaper Joint for Bell-and-Spigot Pipe
3.4.1.4 Cement-Mortar Tongue-and-Groove Joint
3.4.1.5 Cement-Mortar Diaper Joint for Tongue-and-Groove Pipe

3.4.1.6 Plastic Sealing Compound Joints for Tongue-and-Grooved Pipe
3.4.1.7 Flexible Watertight Joints
3.4.1.8 External Sealing Band Joint for Noncircular Pipe
3.4.2 Corrugated Metal Pipe
3.4.2.1 Field Joints
3.4.2.2 Flexible Watertight, Gasketed Joints
3.5 DRAINAGE STRUCTURES
3.5.1 Manholes and Inlets
3.6 BACKFILLING
3.6.1 Backfilling Pipe

-- End of Section Table of Contents --

SECTION 02630

STORM-DRAINAGE SYSTEM

PART 1 GENERAL

1.1 REFERENCES

The publications listed below form a part of this specification to the extent referenced. The publications are referred to in the text by basic designation only.

AMERICAN ASSOCIATION OF STATE HIGHWAY AND TRANSPORTATION OFFICIALS (AASHTO)

AASHTO M 198	(1998) Joints for Circular Concrete Sewer and Culvert Pipe Using Flexible Watertight Gaskets
AASHTO M 294	(2001) Corrugated Polyethylene Pipe, 300- to 1200-mm Diameter
AASHTO MP 7	(1999) Corrugated Polyethylene Pipe, 1350 and 1500 mm Diameter

ASTM INTERNATIONAL (ASTM)

ASTM A 48	(1994ael) Gray Iron Castings
ASTM A 760/A 760M	(2001a) Corrugated Steel Pipe, Metallic-Coated for Sewers and Drains
ASTM A 798/A 798M	(2001) Installing Factory-Made Corrugated Steel Pipe for Sewers and Other Applications
ASTM A 929/A 929M	(2001) Steel Sheet, Metallic-Coated by the Hot-Dip Process for Corrugated Steel Pipe
ASTM C 32	(1993; R 1999el) Sewer and Manhole Brick (Made from Clay or Shale)
ASTM C 55	(2001a) Concrete Brick
ASTM C 62	(2001) Building Brick (Solid Masonry Units Made from Clay or Shale)
ASTM C 76	(2000) Reinforced Concrete Culvert, Storm Drain, and Sewer Pipe

ASTM C 270	(2001a) Mortar for Unit Masonry
ASTM C 425	(2002) Compression Joints for Vitrified Clay Pipe and Fittings
ASTM C 443	(2001) Joints for Concrete Pipe and Manholes
ASTM C 478	(1997) Precast Reinforced Concrete Manhole Sections
ASTM C 877	(2001) External Sealing Bands for Noncircular Concrete Sewer, Storm Drain, and Culvert Pipe
ASTM C 923	(2000) Resilient Connectors Between Reinforced Concrete Manhole Structures, Pipes and Materials
ASTM D 1056	(2000) Flexible Cellular Materials - Sponge or Expanded Rubber
ASTM D 1171	(1999) Rubber Deterioration - Surface Ozone Cracking Outdoors or Chamber (Triangular Specimens)
ASTM D 2321	(2000) Underground Installation of Thermoplastic Pipe for Sewers and Other Gravity-Flow Applications
ASTM D 3350	(2002) Polyethylene Plastics Pipe and Fittings Materials

1.2 SUBMITTALS

Government approval is required for submittals with a "G" designation; submittals not having a "G" designation are for information only. When used, a designation following the "G" designation identifies the office that will review the submittal for the Government. The following shall be submitted in accordance with Section 01330 SUBMITTAL PROCEDURES:

SD-03 Product Data

Placing Pipe; G, RE

Printed copies of the manufacturer's recommendations for installation procedures of the material being placed, prior to installation.

SD-04 Samples

Pipe for Culverts and Storm Drains; G, RE

Samples of the following materials, before work is started: Concrete pipe, coated corrugated steel pipe.

SD-07 Certificates

Frame and Cover for Gratings

Certified copies of test reports demonstrating conformance to applicable pipe specifications, before pipe is installed. Certification on the ability of frame and cover or gratings to carry the imposed live load.

1.3 DELIVERY, STORAGE, AND HANDLING

1.3.1 Delivery and Storage

Materials delivered to site shall be inspected for damage, unloaded, and stored with a minimum of handling. Materials shall not be stored directly on the ground. The inside of pipes and fittings shall be kept free of dirt and debris. Before, during, and after installation, plastic pipe and fittings shall be protected from any environment that would result in damage or deterioration to the material. The Contractor shall have a copy of the manufacturer's instructions available at the construction site at all times and shall follow these instructions unless directed otherwise by the Contracting Officer. Solvents, solvent compounds, lubricants, elastomeric gaskets, and any similar materials required to install plastic pipe shall be stored in accordance with the manufacturer's recommendations and shall be discarded if the storage period exceeds the recommended shelf life. Solvents in use shall be discarded when the recommended pot life is exceeded.

1.3.2 Handling

Materials shall be handled in a manner that ensures delivery to the trench in sound, undamaged condition. Pipe shall be carried to the trench, not dragged.

PART 2 PRODUCTS

2.1 PIPE FOR CULVERTS AND STORM DRAINS

All pipes for culverts and storm drains shall be reinforced concrete unless an extension is made to an existing culvert pipe. All pipe extensions shall match the material of culvert or pipe being connected with. Pipe for culverts and storm drains shall be of the sizes indicated and shall conform to the requirements specified.

2.1.1 Concrete Pipe

ASTM C 76, Class IV.

2.1.2 Corrugated Metal Pipe

ASTM A 760/A 760M galvanized coated pipe, with Manufacturer's Standard Coupling Bands with Same protective Coating as Pipe.

2.1.3 Corrugated PE Pipe

AASHTO M 294, Type S or D, for pipes 12 to 48 inches and AASHTO MP 7, Type S or D, for pipes 54 to 60 inches produced from PE certified by the resin producer as meeting the requirements of ASTM D 3350, minimum cell class in accordance with AASHTO M 294. Pipe walls shall have the following properties:

Nominal Size (in.)	Minimum Wall Area (square in/ft)	Minimum Moment of Inertia of Wall Section (in to the 4th/in)
12	1.50	0.024
15	1.91	0.053
18	2.34	0.062
24	3.14	0.116
30	3.92	0.163
36	4.50	0.222
42	4.69	0.543
48	5.15	0.543
54	5.67	0.800
60	6.45	0.800

2.2 DRAINAGE STRUCTURES

2.2.1 Flared End Sections

a. Corrugated Metal Flared End Sections shall be of a standard design fabricated from zinc coated steel sheets meeting requirements of ASTM A 929/A 929M.

b. Precast, Reinforced Concrete flared end sections shall conform to ASTM C 76. the area of steel reinforcement per linear foot of the flared end section shall be at least equal to the minimum steel requirement for the reinforcement in that portion of the flared end section which abuts the pipe.

2.3 MISCELLANEOUS MATERIALS

2.3.1 Concrete

Unless otherwise specified, concrete and reinforced concrete shall conform to the requirements for 3000 psi concrete under Section 03307 CONCRETE FOR MINOR STRUCTURES.

2.3.2 Mortar

Mortar for pipe joints, connections to other drainage structures, and brick or block construction shall conform to ASTM C 270, Type M, except that the maximum placement time shall be 1 hour. The quantity of water in the mixture shall be sufficient to produce a stiff workable mortar. Water shall be clean and free of harmful acids, alkalies, and organic impurities. The mortar shall be used within 30 minutes after the ingredients are mixed

with water. The inside of the joint shall be wiped clean and finished smooth. The mortar head on the outside shall be protected from air and sun with a proper covering until satisfactorily cured.

2.3.3 Brick

Brick shall conform to ASTM C 62, Grade SW; ASTM C 55, Grade S-I or S-II; or ASTM C 32, Grade MS. Mortar for jointing and plastering shall consist of one part portland cement and two parts fine sand. Lime may be added to the mortar in a quantity not more than 25 percent of the volume of cement. The joints shall be filled completely and shall be smooth and free from surplus mortar on the inside of the structure. Brick structures shall be plastered with 1/2 inch of mortar over the entire outside surface of the walls. For square or rectangular structures, brick shall be laid in stretcher courses with a header course every sixth course. For round structures, brick shall be laid radially with every sixth course a stretcher course.

2.3.4 Precast Reinforced Concrete Manholes

Precast reinforced concrete manholes shall conform to ASTM C 478. Joints between precast concrete risers and tops shall be full-bedded in cement mortar and shall be smoothed to a uniform surface on both interior and exterior of the structure.

2.3.5 Frame and Cover for Gratings

Frame and cover for gratings shall be cast gray iron, ASTM A 48, Class 35B. Weight, shape, size, and waterway openings for grates and curb inlets shall be as indicated on the Drawings.

2.3.6 Joints

2.3.6.1 Flexible Watertight Joints

a. Materials: Flexible watertight joints shall be made with plastic or rubber-type gaskets for concrete pipe and with factory-fabricated resilient materials for clay pipe. The design of joints and the physical requirements for plastic gaskets shall conform to AASHTO M 198, and rubber-type gaskets shall conform to ASTM C 443. Factory-fabricated resilient joint materials shall conform to ASTM C 425. Gaskets shall have not more than one factory-fabricated splice, except that two factory-fabricated splices of the rubber-type gasket are permitted if the nominal diameter of the pipe being gasketed exceeds 54 inches.

b. Test Requirements: Rubber gaskets shall comply with the oil resistant gasket requirements of ASTM C 443. Certified copies of test results shall be delivered to the Contracting Officer before gaskets or jointing materials are installed. Alternate types of watertight joint may be furnished, if specifically approved.

2.3.6.2 External Sealing Bands

Requirements for external sealing bands shall conform to ASTM C 877.

2.3.6.3 Flexible Watertight, Gasketed Joints

a. Gaskets: When infiltration or exfiltration is a concern for pipe lines, the couplings may be required to have gaskets. The closed-cell expanded rubber gaskets shall be a continuous band approximately 7 inches wide and approximately 3/8 inch thick, meeting the requirements of ASTM D 1056, Type 2 A1 or B3, and shall have a quality retention rating of not less than 70 percent when tested for weather resistance by ozone chamber exposure, Method B of ASTM D 1171. Rubber O-ring gaskets shall be 13/16 inch in diameter for pipe diameters of 36 inches or smaller and 7/8 inch in diameter for larger pipe having 1/2 inch deep end corrugation. Rubber O-ring gaskets shall be 1-3/8 inches in diameter for pipe having 1 inch deep end corrugations. O-rings shall meet the requirements of AASHTO M 198 or ASTM C 443. Flexible plastic gaskets shall conform to requirements of AASHTO M 198, Type B.

b. Connecting Bands: Connecting bands shall be of the type, size and sheet thickness of band, and the size of angles, bolts, rods and lugs as indicated or where not indicated as specified in the applicable standards or specifications for the pipe. Exterior rivet heads in the longitudinal seam under the connecting band shall be countersunk or the rivets shall be omitted and the seam welded.

2.4 RESILIENT CONNECTORS

Flexible, watertight connectors used for connecting pipe to manholes and inlets shall conform to ASTM C 923.

PART 3 EXECUTION

3.1 EXCAVATION FOR PIPE CULVERTS, STORM DRAINS, AND DRAINAGE STRUCTURES

Excavation of trenches, and for appurtenances and backfilling for culverts and storm drains, shall be in accordance with the applicable portions of Section 02316 EXCAVATION, TRENCHING, AND BACKFILLING FOR UTILITIES SYSTEMS.

3.2 BEDDING

The bedding shall be in accordance with the applicable portion of Section 02316 EXCAVATION, TRENCHING, AND BACKFILLING FOR UTILITIES SYSTEMS.

3.2.1 Plastic Pipe

Bedding for PE pipe shall meet the requirements of ASTM D 2321.

3.3 PLACING PIPE

Each pipe shall be thoroughly examined before being laid; defective or damaged pipe shall not be used. Plastic pipe shall be protected from exposure to direct sunlight prior to laying, if necessary to maintain

adequate pipe stiffness and meet installation deflection requirements. Pipelines shall be laid to the grades and alignment indicated. Proper facilities shall be provided for lowering sections of pipe into trenches. Lifting lugs in vertically elongated metal pipe shall be placed in the same vertical plane as the major axis of the pipe. Pipe shall not be laid in water, and pipe shall not be laid when trench conditions or weather are unsuitable for such work. Diversion of drainage or dewatering of trenches during construction shall be provided as necessary. Deflection of installed flexible pipe shall not exceed the following limits:

TYPE OF PIPE	MAXIMUM ALLOWABLE DEFLECTION (%)
Corrugated Steel	5
Plastic	7.5

Not less than 30 days after the completion of backfilling, the Government may perform a deflection test on the entire length of installed flexible pipe using a mandrel or other suitable device. Installed flexible pipe showing deflections greater than those indicated above shall be retested by a run from the opposite direction. If the retest also fails, the suspect pipe shall be replaced at no cost to the Government.

3.3.1 Concrete

Laying shall proceed upgrade with spigot ends of bell-and-spigot pipe and tongue ends of tongue-and-groove pipe pointing in the direction of the flow.

3.3.2 Corrugated PE Pipe

Laying shall be with the separate sections joined firmly on a bed shaped to line and grade and shall follow manufacturer's recommendations.

3.3.3 Corrugated Metal Pipe

Laying shall be with the separate sections joined firmly together, with the outside laps of circumferential joints pointing upstream, and with longitudinal laps on the sides. Interior coating shall be protected against damage from insertion or removal of struts or tie wires. Lifting lugs shall be used to facilitate moving pipe without damage to exterior or interior coatings. During transportation and installation, pipe and coupling bands shall be handled with care to preclude damage to the coating. Damaged coatings shall be repaired in accordance with the manufacturer's recommendations prior to placing backfill. Pipe on which coating has been damaged to such an extent that satisfactory field repairs cannot be made shall be removed and replaced.

3.3.4 Multiple Culverts

Where multiple lines of pipe are installed, adjacent sides of pipe shall be at least half the nominal pipe diameter or 3 feet apart, whichever is less.

3.4 JOINTING

3.4.1 Concrete Pipe

3.4.1.1 Cement-Mortar Bell-and-Spigot Joint

The first pipe shall be bedded to the established gradeline, with the bell end placed upstream. The interior surface of the bell shall be thoroughly cleaned with a wet brush and the lower portion of the bell filled with mortar as required to bring inner surfaces of abutting pipes flush and even. The spigot end of each subsequent pipe shall be cleaned with a wet brush and uniformly matched into a bell so that sections are closely fitted. After each section is laid, the remainder of the joint shall be filled with mortar, and a bead shall be formed around the outside of the joint with sufficient additional mortar. If mortar is not sufficiently stiff to prevent appreciable slump before setting, the outside of the joint shall be wrapped or bandaged with cheesecloth to hold mortar in place.

3.4.1.2 Cement-Mortar Oakum Joint for Bell-and-Spigot Pipe

A closely twisted gasket shall be made of jute or oakum of the diameter required to support the spigot end of the pipe at the proper grade and to make the joint concentric. Joint packing shall be in one piece of sufficient length to pass around the pipe and lap at top. This gasket shall be thoroughly saturated with neat cement grout. The bell of the pipe shall be thoroughly cleaned with a wet brush, and the gasket shall be laid in the bell for the lower third of the circumference and covered with mortar. The spigot of the pipe shall be thoroughly cleaned with a wet brush, inserted in the bell, and carefully driven home. A small amount of mortar shall be inserted in the annular space for the upper two-thirds of the circumference. The gasket shall be lapped at the top of the pipe and driven home in the annular space with a caulking tool. The remainder of the annular space shall be filled completely with mortar and beveled at an angle of approximately 45 degrees with the outside of the bell. If mortar is not sufficiently stiff to prevent appreciable slump before setting, the outside of the joint thus made shall be wrapped with cheesecloth. Placing of this type of joint shall be kept at least five joints behind laying operations.

3.4.1.3 Cement-Mortar Diaper Joint for Bell-and-Spigot Pipe

The pipe shall be centered so that the annular space is uniform. The annular space shall be caulked with jute or oakum. Before caulking, the inside of the bell and the outside of the spigot shall be cleaned.

a. Diaper Bands: Diaper bands shall consist of heavy cloth fabric to hold grout in place at joints and shall be cut in lengths that extend one-eighth of the circumference of pipe above the spring line on one side of the pipe and up to the spring line on the other side of the pipe. Longitudinal edges of fabric bands shall be rolled and stitched around two pieces of wire. Width of fabric bands shall be such that after fabric has been securely stitched around both edges on wires, the wires will be uniformly spaced not less than 8 inches apart. Wires shall be cut into lengths to pass around pipe with sufficient extra length for the ends to be

twisted at top of pipe to hold the band securely in place; bands shall be accurately centered around lower portion of joint.

b. Grout: Grout shall be poured between band and pipe from the high side of band only, until grout rises to the top of band at the spring line of pipe, or as nearly so as possible, on the opposite side of pipe, to ensure a thorough sealing of joint around the portion of pipe covered by the band. Silt, slush, water, or polluted mortar grout forced up on the lower side shall be forced out by pouring, and removed.

c. Remainder of Joint: The remaining unfilled upper portion of the joint shall be filled with mortar and a bead formed around the outside of this upper portion of the joint with a sufficient amount of additional mortar. The diaper shall be left in place. Placing of this type of joint shall be kept at least five joints behind actual laying of pipe. No backfilling around joints shall be done until joints have been fully inspected and approved.

3.4.1.4 Cement-Mortar Tongue-and-Groove Joint

The first pipe shall be bedded carefully to the established gradeline with the groove upstream. A shallow excavation shall be made underneath the pipe at the joint and filled with mortar to provide a bed for the pipe. The grooved end of the first pipe shall be thoroughly cleaned with a wet brush, and a layer of soft mortar applied to the lower half of the groove. The tongue of the second pipe shall be cleaned with a wet brush; while in horizontal position, a layer of soft mortar shall be applied to the upper half of the tongue. The tongue end of the second pipe shall be inserted in the grooved end of the first pipe until mortar is squeezed out on interior and exterior surfaces. Sufficient mortar shall be used to fill the joint completely and to form a bead on the outside.

3.4.1.5 Cement-Mortar Diaper Joint for Tongue-and-Groove Pipe

The joint shall be of the type described for cement-mortar tongue-and-groove joint in this paragraph, except that the shallow excavation directly beneath the joint shall not be filled with mortar until after a gauze or cheesecloth band dipped in cement mortar has been wrapped around the outside of the joint. The cement-mortar bead at the joint shall be at least 1/2 inch, thick and the width of the diaper band shall be at least 8 inches. The diaper shall be left in place. Placing of this type of joint shall be kept at least five joints behind the actual laying of the pipe. Backfilling around the joints shall not be done until the joints have been fully inspected and approved.

3.4.1.6 Plastic Sealing Compound Joints for Tongue-and-Grooved Pipe

Sealing compounds shall follow the recommendation of the particular manufacturer in regard to special installation requirements. Surfaces to receive lubricants, primers, or adhesives shall be dry and clean. Sealing compounds shall be affixed to the pipe not more than 3 hours prior to installation of the pipe, and shall be protected from the sun, blowing dust, and other deleterious agents at all times. Sealing compounds shall

be inspected before installation of the pipe, and any loose or improperly affixed sealing compound shall be removed and replaced. The pipe shall be aligned with the previously installed pipe, and the joint pulled together. If, while making the joint with mastic-type sealant, a slight protrusion of the material is not visible along the entire inner and outer circumference of the joint when the joint is pulled up, the pipe shall be removed and the joint remade. After the joint is made, all inner protrusions shall be cut off flush with the inner surface of the pipe. If nonmastic-type sealant material is used, the "Squeeze-Out" requirement above will be waived.

3.4.1.7 Flexible Watertight Joints

Gaskets and jointing materials shall be as recommended by the particular manufacturer in regard to use of lubricants, cements, adhesives, and other special installation requirements. Surfaces to receive lubricants, cements, or adhesives shall be clean and dry. Gaskets and jointing materials shall be affixed to the pipe not more than 24 hours prior to the installation of the pipe, and shall be protected from the sun, blowing dust, and other deleterious agents at all times. Gaskets and jointing materials shall be inspected before installing the pipe; any loose or improperly affixed gaskets and jointing materials shall be removed and replaced. The pipe shall be aligned with the previously installed pipe, and the joint pushed home. If, while the joint is being made the gasket becomes visibly dislocated the pipe shall be removed and the joint remade.

3.4.1.8 External Sealing Band Joint for Noncircular Pipe

Surfaces to receive sealing bands shall be dry and clean. Bands shall be installed in accordance with manufacturer's recommendations.

3.4.2 Corrugated Metal Pipe

3.4.2.1 Field Joints

Transverse field joints shall be designed so that the successive connection of pipe sections will form a continuous line free of appreciable irregularities in the flow line. In addition, the joints shall meet the general performance requirements described in ASTM A 798/A 798M. Suitable transverse field joints which satisfy the requirements for one or more of the joint performance categories can be obtained with the following types of connecting bands furnished with suitable band-end fastening devices: corrugated bands, bands with projections, flat bands, and bands of special design that engage factory reformed ends of corrugated pipe. The space between the pipe and connecting bands shall be kept free from dirt and grit so that corrugations fit snugly. The connecting band, while being tightened, shall be tapped with a soft-head mallet of wood, rubber or plastic, to take up slack and ensure a tight joint. Field joints for each type of corrugated metal pipe shall maintain pipe alignment during construction and prevent infiltration of fill material during the life of the installations. The type, size, and sheet thickness of the band and the size of angles or lugs and bolts shall be as indicated or where not indicated, shall be as specified in the applicable standards or specifications for the pipe.

3.4.2.2 Flexible Watertight, Gasketed Joints

Installation shall be as recommended by the gasket manufacturer for use of lubricants and cements and other special installation requirements. The gasket shall be placed over one end of a section of pipe for half the width of the gasket. The other half shall be doubled over the end of the same pipe. When the adjoining section of pipe is in place, the doubled-over half of the gasket shall then be rolled over the adjoining section. Any unevenness in overlap shall be corrected so that the gasket covers the end of pipe sections equally. Connecting bands shall be centered over adjoining sections of pipe, and rods or bolts placed in position and nuts tightened. Band Tightening: The band shall be tightened evenly, even tension being kept on the rods or bolts, and the gasket; the gasket shall seat properly in the corrugations. Watertight joints shall remain uncovered for a period of time designated, and before being covered, tightness of the nuts shall be measured with a torque wrench. If the nut has tended to loosen its grip on the bolts or rods, the nut shall be retightened with a torque wrench and remain uncovered until a tight, permanent joint is assured.

3.5 DRAINAGE STRUCTURES

3.5.1 Manholes and Inlets

Construction shall be of reinforced concrete, plain concrete, brick, precast reinforced concrete, precast concrete segmental blocks, prefabricated corrugated metal, or bituminous coated corrugated metal; complete with frames and covers or gratings; and with fixed galvanized steel ladders where indicated. Pipe studs and junction chambers of prefabricated corrugated metal manholes shall be fully bituminous-coated and paved when the connecting branch lines are so treated. Pipe connections to concrete manholes and inlets shall be made with flexible, watertight connectors.

3.6 BACKFILLING

3.6.1 Backfilling Pipe

Backfilling and compaction of pipe shall be done in accordance with Section 02316 EXCAVATION, TRENCHING, AND BACKFILLING FOR UTILITIES SYSTEMS.

-- End of Section --

SECTION TABLE OF CONTENTS

DIVISION 02 - SITE WORK

SECTION 02661

LLDPE LINERS

PART 1 GENERAL

1.1 REFERENCES
1.2 DEFINITIONS
1.2.1 Boot
1.2.2 Film Tearing Bond
1.2.3 Geomembrane
1.2.4 Panel
1.2.5 Sheet
1.2.6 Watertight
1.3 SUBMITTALS
1.4 QUALIFICATIONS
1.4.1 Testing Agency
1.4.2 Manufacturer and Fabricator
1.4.3 Installer
1.5 COORDINATION MEETINGS
1.6 DELIVERY, STORAGE, AND HANDLING
1.6.1 Geomembrane
1.6.2 Epoxy Adhesive
1.7 ENVIRONMENTAL REQUIREMENTS
1.8 SEQUENCING AND SCHEDULING

PART 2 PRODUCTS

2.1 GEOMEMBRANE
2.2 BOOTS
2.2.1 Fabrication
2.2.2 Flanges
2.3 SEALANT CAULKING
2.4 STAINLESS STEEL BATTENS
2.5 EPOXY ANCHOR SYSTEM
2.5.1 Anchor Rod
2.5.2 Nuts
2.5.3 Washers
2.5.4 Epoxy Adhesive
2.6 NEOPRENE RUBBER PAD
2.6.1 Compression Strip Beneath Battens
2.6.2 Contact Cement
2.7 PROTECTIVE FOAM
2.8 PRECONSTRUCTION FACTORY TESTING
2.8.1 Interface Friction Testing

PART 3 EXECUTION

3.1 PREPARATION

3.1.1 Geomembrane Inspection
3.1.2 Subgrade Inspection
3.1.3 Maintenance of Subgrade
3.1.4 Concrete Surfaces in Contact with Geomembrane
3.2 SOIL STERILANT
3.3 WELDING UNITS
3.4 GEOMEMBRANE INSTALLATION
3.4.1 Test Results
3.4.2 Protection
3.4.3 Placement
3.4.4 Field Seams
3.4.5 Geomembrane Attachment to Flat Concrete Surfaces
3.4.6 Boot Seals
3.5 PLACING PRODUCTS OVER GEOMEMBRANE
3.6 REPAIRING GEOMEMBRANE
3.7 FIELD QUALITY CONTROL
3.7.1 Certification of Installation
3.7.2 Testing
3.7.3 In-Place Observation and Testing
3.7.4 Field Testing Equipment
3.7.5 Field Seam Sampling
3.7.6 Field Seam Strength Sample Testing
3.7.6.1 General
3.7.6.2 Field Seam Acceptance Criteria:
3.7.6.3 Test Failure
3.7.7 Vacuum Box Testing of Geomembrane Welds
3.7.8 High Voltage Spark Testing of Fillet Welds
3.7.9 Air Channel Pressure Testing of Double Hot-Wedge Seam
3.8 MANUFACTURER'S SERVICES
3.9 CLEANUP
3.9.1 Clean up work area as Work proceeds
3.10 GEOMEMBRANE INSTALLER'S CERTIFICATION OF SUBSURFACE ACCEPTABILITY

-- End of Section Table of Contents --

SECTION 02661

LLDPE LINERS

PART 1 GENERAL

1.1 REFERENCES

The publications listed below form a part of this specification to the extent referenced. The publications are referred to in the text by basic designation only.

ASTM INTERNATIONAL (ASTM)

ASTM A 193/A 193M	(2001b) Alloy-Steel and Stainless Steel Bolting Materials for High-Temperature Service
ASTM A 194/A 194M	(2001a) Carbon and Alloy Steel Nuts for Bolts for High-Pressure or High-Temperature service, or both
ASTM A 276	(2000ael) Stainless Steel Bars and Shapes
ASTM C 881	(1999) Epoxy-Resin-Base Bonding Systems for Concrete
ASTM D 413	(1998) Rubber Property - Adhesion to Flexible Substrate
ASTM D 638	(2001) Tensile Properties of Plastics
ASTM D 746	(1998) Brittleness Temperature of Plastics and Elastomers by Impact
ASTM D 751	(2000) Coated Fabrics
ASTM D 792	(2000) Density and Specific Gravity (Relative Density) of Plastics by Displacement
ASTM D 816	(2001) Standard Test Methods for Rubber Cements
ASTM D 1004	(1994a) Initial Tear Resistance of Plastic Film and Sheeting
ASTM D 2240	(2002) Rubber Property - Durometer Hardness
ASTM D 4833	(2000) Index Puncture Resistance of Geotextiles, Geomembranes, and Related

	Products
ASTM D 5199	(2001) Measuring Nominal Thickness of Geotextiles and Geomembranes
ASTM D 5321	(1992; R 1997) Determining the Coefficient of Soil and Geosynthetic or Geosynthetic and Geosynthetic Friction by the Direct Shear Method
ASTM D 5641	(2001) Standard Practice for Geomembrane Seam Evaluation by Vacuum Chamber
ASTM D 6392	(1999) Determining the Integrity of Nonreinforced Geomembrane Seams Produced Using Thermo-Fusion Methods

1.2 DEFINITIONS

1.2.1 Boot

Watertight collar fabricated from geomembrane sheet for sealing geomembrane to pipes and other objects that penetrate geomembrane.

1.2.2 Film Tearing Bond

Failure in ductile mode of one bonded sheet, by testing, prior to complete separation of bonded area.

1.2.3 Geomembrane

Essentially impermeable geosynthetic composed of one or more layers of polyolefin materials fusion bonded into single-ply integral sheet.

1.2.4 Panel

Piece of geomembrane composed of two or more sheets seamed together.

1.2.5 Sheet

Seamless piece of geomembrane.

1.2.6 Watertight

Geomembrane installation free of flaws and defects that will allow passage of water and gases, liquids, and solids to be contained under anticipated service conditions.

1.3 SUBMITTALS

Government approval is required for submittals with a "G" designation; submittals not having a "G" designation are for information only. When used, a designation following the "G" designation identifies the office that will review the submittal for the Government. The following shall be

submitted in accordance with Section 01330 SUBMITTAL PROCEDURES:

SD-03 Product Data

Geomembrane

Geomembrane sheet layout with proposed size, number, position, and sequence of sheet placement, and location of field seams.

SD-04 Samples

Field Seam Sampling

SD-07 Certificates

Geomembrane

Factory test results.

Rough-surfaced geomembrane coefficient of interface friction test results.

Certified calibrations, manufacturer's product data, and test procedures, and 5 year warranty against manufacturer and installation defects.

Geomembrane Installer's Certification of Subsurface Acceptability

Form attached at end of this section.

Manufacturer's Services

Include panel and sheet numbers, seaming equipment and operator identification, temperature and speed setting of equipment, date seamed, identity and location of each repair, cap strip, penetration, boot and sample taken from installed geomembrane for testing.

1.4 QUALIFICATIONS

1.4.1 Testing Agency

Certified to perform work for as specified, and 5 years' experience in field of geomembrane testing. Calibrated instruments and equipment, and documented standard procedures for performing specified testing.

1.4.2 Manufacturer and Fabricator

Successfully manufactured minimum of 10 million square feet of each type of geomembrane material specified for applications similar to Project.

1.4.3 Installer

Successfully installed minimum of 1 million square feet of each type of

geomembrane product specified in applications similar to Project.

1.5 COORDINATION MEETINGS

Meet at least once prior to commencing each of the following activities:

a. Submission of Submittals.

b. Manufacture of geomembrane sheets.

c. Fabrication of panels and boots.

d. Installation of geomembrane.

Attendees

a. Contractor's designated quality control representative.

b. Contracting Officer.

c. Representatives of geomembrane installer.

d. Others requested by Contracting Officer.

Topics

a. Specifications and Drawings.

b. Submittal requirements and procedures.

c. Schedule for beginning and completing geomembrane installation.

d. Training for installation personnel.

e. Installation crew size.

f. Establishing geomembrane marking system, to include sheet identification, defects, and satisfactory repairs, to be used throughout Work.

Seam Installation and Testing Demonstration: Performed by geomembrane installer, for each type of seam required.

1.6 DELIVERY, STORAGE, AND HANDLING

1.6.1 Geomembrane

Individually package each sheet and protect from damage during shipment. Mark each package with identification of material type, size, and weight.

1.6.2 Epoxy Adhesive

Storage Temperature

a. Control temperature above 60 degrees F and dispose of cartridges if shelf life has expired.

b. If stored at temperatures below 60 degrees F, test adhesive prior to use to determine if adhesive meets specified requirements.

1.7 ENVIRONMENTAL REQUIREMENTS

Do not install geomembrane or perform seaming under the following conditions, unless it can be demonstrated to satisfaction of Contracting Officer that performance requirements can be met under these conditions:

a. Air temperature is less than 35 degrees F or more than 90 degrees F.

b. Relative humidity is more than 90 percent.

c. Raining or wind is excessive.

Do not place granular materials on geomembrane when ambient temperature is less than 35 degrees F, unless it can be demonstrated to satisfaction of Contracting Officer that materials can be placed without damage.

1.8 SEQUENCING AND SCHEDULING

Factory test results must be acceptable to the Contracting Officer prior to shipment of geomembrane.

Before placing geomembrane on soil surfaces, prepare subgrade as specified in Section 02300 EARTHWORK.

Do not attach geomembrane to new concrete surfaces until after concrete has attained two-thirds of design compressive strength specified in Section 03307 CONCRETE FOR MINOR STRUCTURES.

Do not place geomembrane over concrete surfaces until finish of concrete surfaces, as specified in Section 03307 CONCRETE FOR MINOR STRUCTURES is acceptable to Contracting Officer.

PART 2 PRODUCTS

2.1 GEOMEMBRANE

Composition: Linear low-density polyethylene (LLDPE) containing no plasticizers, fillers, extenders, reclaimed polymers, or chemical additives, except following:

a. Approximately 2 percent by weight of carbon black to resin for ultraviolet resistance.

b. Antioxidants and heat stabilizers, not to exceed 1.5 percent total by weight, may be added as required for manufacturing.

Furnish in rolled single-ply continuous sheets with no factory seams.

Sheet Thickness: Minimum values determined in accordance with ASTM D 5199 and shall not include ridges of rough-surfaced LLDPE geomembrane 40 mils.

Sheet Width: Minimum 22 feet.

Roll Length: Longest that will be manageable and reduce field seams.

Rough-Surfaced LLDPE Geomembrane: Manufactured so that surface irregularities that produce specified friction are adequately fused into sheet or are extruded with sheet, on both sides of sheet. Texture is to be in addition to base thickness specified for sheet.

Meet manufacturer's most recent published specifications and required minimum LLDPE geomembrane values in this table.

Minimum Physical Properties for LLDPE Geomembrane

Property	Required Value	Test Method
Specific Gravity	0.91 to 0.94, g/cc	ASTM D 792, Method A-1
Smooth-Surface, LLDPE Minimum Properties, Each Direction		
Tensile Stress at Break	3.8 lb/in-width/mil thickness, min.	ASTM D 638
Elongation at Break	800%, min.	
Thickness, Nominal, plus or minus 10%	40 mils	ASTM D 5199
Puncture Resistance	1.30 lb/mil thickness	ASTM D 4833
Tear Resistance	0.55 lb/mil thickness	ASTM D 1004, Die C
Bonded Seam Strength in Shear	1.5 lb/in-width/ mil thickness, min. and FTB	ASTM D 816, Method B
Bonded Seam Strength in Peel	1.2 lb/in.-width/ mil thickness, min. and FTB	ASTM D 413, Method A
Rough-Surfaced, LLDPE Minimum Properties, Each Direction		
Thickness, min., for thinner areas of textured sheet	54 mil	ASTM D 5199, Modified Note 2

Minimum Physical Properties for LLDPE Geomembrane

Tensile Stress at Break	1.5 lb/mil thickness, min.	ASTM D 638
Elongation at Break	250%, min.	ASTM D 638
Puncture Resistance	1.2 lb/mil thickness, min.	ASTM D 4833
Tear Resistance	0.55 lb/mil thickness, min.	ASTM D 1004, Die C
Angle of friction between rough-surfaced LLDPE, & soil or geotextile	, min. (Note 1) 25 degrees	ASTM D 5321, state conditions of test.
Brittleness Temperature	Minus 70° F, no cracks	ASTM D 746, (Proc. B)
Hydrostatic Resistance	7.5 lb/sq.in./mil thickness	ASTM D 751, Method A
Bonded Seam Strength in Shear	1.5 lb/in-width/mil thickness, min. & FTB	ASTM D 816, Method B
Bonded Seam Strength in Peel	1.2 lb/in-width/mil thickness, min. & FTB	ASTM D 413, Method A

NOTES

1. Provide certified results for angle or coefficient of friction tests between rough-surfaced LLDPE and actual soils and geotextiles to be used. Perform tests on Samples of similar length and width of 0.8- to 1-square foot minimum area. Submit test results to Contracting Officer for review prior to shipment of rough-surfaced LLDPE.

2. Commercially available micrometers may be used that have a 60-degree taper to a point with a radius of 1/32 inch. Contracting Officer shall make enough measurements of thinner areas of textured sheet to develop statistical basis for thickness.

Extrudate for Fusion Welding of LLDPE Geomembranes: Formulated from same resin as geomembrane and shall meet applicable physical property requirements.

2.2 BOOTS

2.2.1 Fabrication

Fabricated of same material as geomembrane sheets to fit around

penetrations, without folds, stretching, or unsupported areas.

2.2.2 Flanges

a. Angle: Match slope or bottom where penetration passes through liner.

b. Width: Minimum 2 feet, plus dimension of penetration.

2.3 SEALANT CAULKING

Two-component sealant formulated of 100 percent polyurethane elastomer.

Manufacturer and Product: United Paint and Coatings, Greenacres, WA; Elastuff 120 Mastic.

2.4 STAINLESS STEEL BATTENS

In conformance with ASTM A 276, Type 316, Grade A.

a. Flat Bars: 2 inches wide by 1/4 inch thick.

b. Channel: 2 inches wide by 1/8 inch thick.

2.5 EPOXY ANCHOR SYSTEM

2.5.1 Anchor Rod

Conform to ASTM A 193/A 193M, Type 316 stainless steel threaded rod free of grease, oil, and other deleterious material.

2.5.2 Nuts

Stainless Steel, conform to ASTM A 194/A 194M, Type 316.

2.5.3 Washers

Flat, stainless steel, conforming to ASTM A 194/A 194M, Type 316.

2.5.4 Epoxy Adhesive

a. Two-component, 100 percent solids, nonsag, paste, insensitive to moisture, designed to be used in adverse freeze/thaw environments.

b. Conform to ASTM C 881, Type 1, Grade 3, Class A, B, or C.

c. Cure Temperature, Pot Life, and Workability: Compatible for intended use and environmental conditions.

2.6 NEOPRENE RUBBER PAD

2.6.1 Compression Strip Beneath Battens

2 inches wide by 1/4 inch thick.

35 to 45 durometer, in accordance with ASTM D 2240 hardness.

2.6.2 Contact Cement

As recommended by neoprene rubber pad manufacturer.

2.7 PROTECTIVE FOAM

Medium to high-density rigid board.

2.8 PRECONSTRUCTION FACTORY TESTING

2.8.1 Interface Friction Testing

a. Minimum peak and residual friction angles between geomembrane and adjacent materials as determined by ASTM D 5321. Confining pressures should approximate loading conditions in field. Soil in contact with geomembrane shall be in consolidated, undrained state.

b. Test results shall include description of specimen size, supporting substrate conditions, soil installation method, unit weight, and moisture condition, normal loads used, and rate of strain.

c. Rough-Surfaced Geomembrane:

Perform coefficient of interface friction tests between geomembrane and actual materials that will be in contact with it. Use Samples of similar length and width. Soil at geomembrane interface shall be consolidated-undrained material.

Test Results: Include specimen size, supporting substrate, soil installation method and unit weight, soil moisture at molding and test, and rate of strain and normal loads.

PART 3 EXECUTION

3.1 PREPARATION

3.1.1 Geomembrane Inspection

During unwrapping visually inspect and mark each imperfection for repair.

3.1.2 Subgrade Inspection

Do not place geomembrane until condition of subgrade or geosynthetics installed is acceptable to Contracting Officer.

3.1.3 Maintenance of Subgrade

Maintain in smooth, uniform, and compacted condition as specified in Section 02300 EARTHWORK, during installation of geomembrane.

3.1.4 Concrete Surfaces in Contact with Geomembrane

a. As specified in Section Section 03307 CONCRETE FOR MINOR STRUCTURES, unless otherwise specified herein.

b. Provide smooth surface, free of projections, rough spots, voids, honeycomb, or other irregularities. Grind uneven concrete surfaces to which geomembrane is to be attached, flat and smooth. Round edges minimum 1/2-inch radius.

c. Clean contact surfaces of dirt, dust, oil, curing compounds, and other coatings by sandblasting.

3.2 SOIL STERILANT

Apply to prepared subgrade beneath liner and handle in strict accordance with manufacturer's recommendations.

3.3 WELDING UNITS

a. Single or double hot-wedge fusion seam welding.

b. Extrusion welding systems.

c. Hot-air welding is not acceptable.

3.4 GEOMEMBRANE INSTALLATION

3.4.1 Test Results

Do not install geomembrane or seam unless Contractor can demonstrate successful performance and test results showing seams meet strength specifications.

3.4.2 Protection

a. Do not use geomembrane surfaces as work area for preparing patches, storing tools and supplies, or other uses. Use protective cover as work surface, if necessary.

b. Instruct workers about requirements for protection of geomembrane, such as, handling geomembrane material in high winds, handling of equipment, and walking on geomembrane surfaces. Shoes of personnel walking on geomembrane shall be smooth bonded sole or be covered with smooth type of overboot. Prohibit smoking, eating, or drinking in vicinity of geomembrane, placing heated equipment directly on geomembrane, or other activities that may damage geomembrane.

c. Do not operate equipment without spark arrestors in vicinity of geomembrane material nor place generators or containers of flammable liquid on geomembranes.

d. Protect from vehicle traffic and other hazards.

e. Keep free of debris during placement.

f. Prevent uplift, displacement, and damage by wind.

g. Only small rubber-tired equipment, with maximum tire inflation pressure of 5 pounds per square inch, shall be allowed directly on geomembrane, unless otherwise approved by Contracting Officer. Demonstrate that equipment can be operated without damaging geomembrane.

3.4.3 Placement

a. Miscellaneous products required for completion of geomembrane installation shall be in accordance with this specification and geomembrane manufacturer's recommendations.

b. Reduce field seaming to minimum. Horizontal seams on slopes will not be acceptable. Seams parallel to toe shall be at least 5 feet from toe. Align rough-sided sheets in manner that maximizes their frictional capabilities along slope.

c. Prevent wrinkles, folds, or other distress that can result in damage or prevent satisfactory alignment or seaming. Provide for factors such as expansion, contraction, overlap at seams, anchorage requirements, seaming progress, and drainage.

d. Temporarily weight sheets with sandbags to anchor or hold them in position during installation. Use continuous holddowns along edges to prevent wind flow under sheet.

Bag Fabric: Sufficiently close knit to preclude fines from working through bags.

Bags: Contain not less than 40 nor more than 60 pounds of sand having 100 percent passing No. 8 screen and shall be securely closed after filling to prevent sand loss.

Do not use tires or paper bags, whether or not lined with plastic. Burlap bags, if used, shall be lined with plastic.

Immediately remove damaged or improperly sealed bags from work area, and clean up spills.

e. Anchor perimeter of geomembrane as shown or as otherwise approved by the Contracting Officer. Anchor and seal geomembrane to structures, pipes, and other types of penetrations as shown.

f. Place overlying geotextile and soil cover immediately following completion of geomembrane installation and field testing as acceptable to the Contracting Officer.

3.4.4 Field Seams

a. Wipe sheet contact surfaces clean to remove dirt, dust, moisture,

and other foreign materials and prepare contact surfaces in accordance with seaming method accepted by the Contracting Officer.

b. Lap sheet edges to form seams. Adjust edges to be seamed and temporarily anchor to prevent wrinkling and shrinkage.

c. Seams shall not go through a boot. Locate seams minimum of 2 feet from boot.

d. Avoid seam intersections involving more than three thicknesses of geomembrane material. Offset seam intersections at least 2 feet. Extend seams through anchor trench to sheet edges.

e. Seal seam "T" intersections by removing excess material and extrusion welding lap joint.

f. Seam sheets together, using fusion-extrusion or hot-wedge welding system, equipment, and techniques.

g. Capping of Field Seams: Use 8 inch wide (minimum) cover strip of same thickness as geomembrane (and from same roll, if available). Position strip over center of field seam and weld to geomembrane using fillet weld each side, including copper wire as described above for spark testing.

3.4.5 Geomembrane Attachment to Flat Concrete Surfaces

a. Concrete Anchors: Install in accordance with anchor manufacturer's written instructions, and using manufacturer's drills and equipment.

b. Position and fit geomembrane to be free of wrinkles at locations of attachment.

c. Tighten anchor bolt nuts to uniformly deform rubber pad beneath battens 12 to 15 percent of total thickness of rubber pad to obtain watertight connection of geomembrane to concrete surface.

3.4.6 Boot Seals

a. Preparation: Thoroughly clean contact surfaces.

b. Place boot around penetrations so flange is supported everywhere in full contact with subgrade, and is free of wrinkles.

c. Seal boot to surrounding geomembrane as specified for field seams using extrusion-welding methods.

d. Tighten steel clamping bands until neoprene rubber pads are compressed 12 to 15 percent of total pad thickness.

3.5 PLACING PRODUCTS OVER GEOMEMBRANE

a. Prior to placing material over geomembrane, notify Contracting

Officer. Do not cover installed geomembrane until after Contracting Officer provides authorization to proceed.

b. Place, spread and compact materials as specified in Section 02300 EARTHWORK.

c. Do not place granular materials on geomembrane when typical height of wrinkles is less than 2 inches and spacing between wrinkles is greater than 10 feet.

d. Do not place soil materials in manner that will cause wrinkles to fold over or become confined to form a vertical ridge.

e. Place soil materials when liner is cool and contracted and wrinkles are minimized.

f. If tears, punctures, or other geomembrane damage occurs during placement of overlying products, remove overlying products as necessary to expose damaged geomembrane, and repair damage as specified in paragraph REPAIRING GEOMEMBRANE.

g. Geomembrane installer shall remain available during placement of overlying products to repair geomembrane if damaged.

3.6 REPAIRING GEOMEMBRANE

a. Geomembrane surface showing injury due to scuffing, penetration by foreign objects, or distress from rough subgrade shall be replaced or covered and sealed with an additional layer of geomembrane material of proper size.

b. Repair damage or rejected seams with pieces of flat and unwrinkled geomembrane material free from defects and seams. Patches shall be tightly bonded on completion of repair Work.

c. Patch shall be neat in appearance and of size 6 inches larger in all directions than area to be repaired. Round corners of patch to minimum 1-inch radius.

d. Prepare contact surfaces and seam patch in accordance with paragraph Field Seams.

Pull and hold flat receiving surface in area to be patched.

Seal each patch by extrusion welding continuous bead along edge, with no free edge remaining.

Vacuum box test each patch on completion.

3.7 FIELD QUALITY CONTROL

3.7.1 Certification of Installation

Prior to starting geomembrane installation and daily thereafter for

installation of geomembrane on the subgrade surface, geomembrane installer shall certify in duplicate that surface upon which geomembrane shall be installed and installation process for the geomembrane is acceptable, on form located at end of section.

3.7.2 Testing

Identify each test by date of sample, date of test, sample location, name of individual who performed test, standard test method used, list of departures from standard test methods, at minimum.

3.7.3 In-Place Observation and Testing

a. Visually inspect geomembrane sheets, seams, anchors, seals, and repairs for defects as installation progresses and again on completion.

b. Depending on seam welding equipment used, test each seam and repair using vacuum testing device, spark testing device, or air channel pressure test for double wedge welded seams.

c. Perform testing in presence of the Contracting Officer.

3.7.4 Field Testing Equipment

a. Tensiometer:

Motor driven with jaws capable of traveling at measured rate of 2 inches per minute.

Equipped with gauge which measures force in unit pounds exerted between jaws.

b. Vacuum Box

Conform to ASTM D 5641.

c. High Voltage Spark Detector

Set at 20,000 volts.

3.7.5 Field Seam Sampling

a. Verify that seaming equipment and operators are performing adequately. Produce test seam samples at beginning of each shift for each seaming crew. In addition, if seaming has been suspended for more than 1/2 hour, or if breakdown of seaming equipment occurs, produce test seam samples prior to resuming seaming.

b. Sample Size: 12 inches wide plus seam width, and 30 inches long.

c. Nondestructive Sampling:

For boots and seams that cannot be otherwise tested, insert copper

wire for spark test at edge of overlapping sheet in extrudate of weld prior to filet welding. Position to within 1/8 inch of sheet edge.

Frequency: Minimum one sample per 500 feet of field seam or portion thereof, and minimum one sample per seaming crew per 4-hour work period.

Produce samples using same materials, equipment, personnel, and procedures as field seams made at time of work in progress and under same conditions.

d. Destructive Sampling:

Frequency: Determined by the Contracting Officer.

Remove Samples from field seams at locations selected by the Contracting Officer.

Repair field seams in accordance with repair procedures specified in these specifications.

e. Sample Identification:

Number, date, and identify each sample as to personnel making seam and location of sample or location of field seam Work in progress at time Sample is made.

Mark location of Sample, or location of field seam in progress at time sample is made, on panel/sheet layout Drawing.

f. Contractor shall conform with the following testing requirements for nondestructive and destructive seam tests used to define quality of field seams:

Perform shear and peel testing on portion of sample as specified hereinafter using approved field tensiometer.

Send portion of sample by overnight service to approved Independent Testing Agency for verification of field test results.

Archive a portion of sample for potential verification testing later.

Independent Testing Agency shall provide preliminary test results by facsimile or other means no later than 24 hours after Samples have been received from the Contractor, unless otherwise approved by the Contracting Officer. Certified test results shall be provided no more than 7 days after Samples have been received from Contractor.

g. Conform to ASTM D 6392 and this specification.

Seam testing for geomembrane includes strength tests, vacuum box

testing,high voltage spark tests, air channel pressure tests, and probing.

3.7.6 Field Seam Strength Sample Testing

3.7.6.1 General

a. Test each sample for seam peel and tensile strength.

b. Save test samples, including specimens tested, until notified by Contracting Officer relative to their disposal.

c. Each sample that fails under test shall be shipped immediately by express delivery to Contracting Officer for determination of corrective measures required.

3.7.6.2 Field Seam Acceptance Criteria:

Seam strength equal to 90 percent of that of parent material. Parent material shall be tested in accordance with ASTM D 638.

a. Bonded Shear Strength of LLDPE:

1. In Shear: Minimum 1.5 pounds per inch per mil thickness as determined by ASTM D 6392 and ASTM D 816, Method B.

2. In Peel: Minimum 1.2 pounds per inch per mil thickness as determined by ASTM D 6392 and ASTM D 413, Method A.

3.7.6.3 Test Failure

If sample fails, entire field seam from which it was taken shall be considered a failure and shall be rejected due to nonconformance with specification requirements. Comply with following corrective measures:

a. For nondestructive sample failure, rerun field weld test using same sample. If that test passes, Contracting Officer may assume error was made in first test and accept field seam. If second test fails, cap each field seam represented by failed sample and submit new test Sample made during capping procedure.

b. Destructive Sample Failure: Rerun field weld test using new sample from same seam. If that test passes, Contracting Officer may assume error was made in first test and accept field seam. If second test fails, either cap field seam between two previous passed seam test locations that include failed seam or take another sample on each side of failed seam location (10 feet minimum), and test both. If both pass, cap field seam between two locations. If either fails, repeat process of taking samples for test. Each field seam shall be bounded by two passed test locations prior to acceptance.

3.7.7 Vacuum Box Testing of Geomembrane Welds

a. Vacuum box test each of these types of welds: Fillet, extrusion lap, and single hot-wedge fusion lap.

b. Testing Procedures: Conforming to ASTM D 5641.

3.7.8 High Voltage Spark Testing of Fillet Welds

a. Provide each seam to be tested with copper wires properly embedded in seam as shown and with provisions for electrical grounding to test equipment.

b. Pass spark tester along length of seam containing copper wire.

c. Presence of a visible spark along tested seam shall be evidence of a faulty seam.

d. Mark faulty areas for repair and retesting.

3.7.9 Air Channel Pressure Testing of Double Hot-Wedge Seam

a. Insert needle with gauge in air space between welds. Pump air into space to 30 psi and hold for 5 minutes.

b. At end of 5 minutes, depressurize seam by placing needle hole in air space between welds at opposite end of seam and observe gauge.

c. Seam is acceptable if seam maintains at least 27 psi during 5-minute hold and pressure drops within 30 second of depressurization.

d. Seam is acceptable if seam maintains a minimum of 27 psi. If pressure drops below 27 psi during test period, or does not drop during 30-second depressurization period, repair needle holes and retest seam by same procedure or vacuum box test along entire length of seam.

e. Vacuum box test entire length of seam if second air pressure test fails.

   If no bubbles appear in vacuum box, lower weld will be considered defective and upper seam is acceptable.

   If bubbles appear in vacuum box, repair each defective area by extrusion welding and test again by vacuum box.

f. As alternative to vacuum box testing, apply soap solution to exposed seam edge while maintaining required air channel test pressure.

   If bubbles appear, mark, trim unbonded edge, and extrusion weld defective areas.

   If no bubbles appear and test pressure cannot be maintained, leak is judged to be in bottom or second seam.

g. If leak is judged to be in bottom seam, cap strip length of seam tested.

h. Mark and repair needle holes.

3.8 MANUFACTURER'S SERVICES

Provide authorized representative of geomembrane manufacturer onsite for technical supervision and assistance during the following:

a. Preparation and inspection of surfaces on which geomembrane is to be placed.

b. Inspection of geomembrane prior to installation.

c. Installation of geomembrane.

d. Placement of cover over installed geomembrane.

e. Provide a 5 year warranty against any manufacturer and installation defects.

3.9 CLEANUP

3.9.1 Clean up work area as Work proceeds

Take particular care to ensure that no trash, tools, and other unwanted materials are trapped beneath geomembrane and that scraps of geomembrane material are removed from Work area prior to completion of installation.

3.10 GEOMEMBRANE INSTALLER'S CERTIFICATION OF SUBSURFACE ACCEPTABILITY

GEOMEMBRANE INSTALLER'S CERTIFICATION OF ACCEPTABILITY

Geomembrane installer, _____
for Project, hereby certify that supporting surfaces are acceptable for installation of geomembrane, undersigned having personally inspected condition of prepared surfaces, inspection of geomembrane prior to installation, installation of geomembrane, and placement of cover materials over installed geomembrane. This certification is for areas shown on Attachment or defined as follows:

_____

_____

_____

_____

Condition of supporting surfaces in defined area meets or exceeds minimum requirements for installation of geomembrane.

Signed: _____
(Representative of Geomembrane Installer)

_____
Officer of the Firm

Date: _____

Witness: _____

-- End of Section --

SECTION TABLE OF CONTENTS

DIVISION 02 - SITE WORK

SECTION 02722

AGGREGATE BASE COURSE

PART 1 GENERAL

1.1 REFERENCES
1.2 DEFINITIONS
1.2.1 Aggregate Base Course
1.2.2 Degree of Compaction
1.3 SUBMITTALS
1.4 SAMPLING AND TESTING
1.4.1 Sampling
1.4.2 Tests
1.4.2.1 Sieve Analysis
1.4.2.2 Liquid Limit and Plasticity Index
1.4.2.3 Moisture-Density Determinations
1.4.2.4 Field Density Tests
1.4.2.5 Wear Test
1.4.2.6 Soundness
1.4.2.7 Weight of Slag
1.4.3 Testing Frequency
1.4.3.1 Initial Tests
1.4.3.2 In Place Tests
1.4.4 Approval of Material
1.5 WEATHER LIMITATIONS
1.6 PLANT, EQUIPMENT, AND TOOLS

PART 2 PRODUCTS

2.1 AGGREGATES
2.1.1 Coarse Aggregate
2.1.1.1 Aggregate Base Course
2.1.2 Fine Aggregate
2.1.2.1 Aggregate Base Course
2.1.3 Gradation Requirements
2.1.4 Liquid Limit and Plasticity Index

PART 3 EXECUTION

3.1 GENERAL REQUIREMENTS
3.2 OPERATION OF AGGREGATE SOURCES
3.3 STOCKPILING MATERIAL
3.4 PREPARATION OF UNDERLYING COURSE
3.5 INSTALLATION
3.5.1 Mixing the Materials
3.5.2 Placing
3.5.3 Grade Control
3.5.4 Edges of Base Course

3.5.5 Compaction
3.5.6 Thickness
3.5.7 Proof Rolling
3.5.8 Finishing
3.5.9 Smoothness
3.6 TRAFFIC
3.7 MAINTENANCE
3.8 DISPOSAL OF UNSATISFACTORY MATERIALS

-- End of Section Table of Contents --

SECTION 02722

AGGREGATE BASE COURSE

PART 1 GENERAL

1.1 REFERENCES

The publications listed below form a part of this specification to the extent referenced. The publications are referred to in the text by basic designation only.

AMERICAN ASSOCIATION OF STATE HIGHWAY AND TRANSPORTATION OFFICIALS (AASHTO)

AASHTO T 180	(1997) Moisture-Density Relations of Soils Using a 4.54-kg (10-lb) Rammer and an 457 mm (18-in) Drop
AASHTO T 224	(1996) Correction for Coarse Particles in the Soil Compaction Test

ASTM INTERNATIONAL (ASTM)

ASTM C 29/C 29M	(1997) Bulk Density ("Unit Weight") and Voids in Aggregates
ASTM C 88	(1999a) Soundness of Aggregates by Use of Sodium Sulfate or Magnesium Sulfate
ASTM C 117	(1995) Materials Finer Than 75 micrometer (No. 200) Sieve in Mineral Aggregates by Washing
ASTM C 127	(2001) Specific Gravity and Absorption of Course Aggregate
ASTM C 128	(2001) Specific Gravity and Absorption of Fine Aggregate
ASTM C 131	(2001) Resistance to Degradation of Small-Size Coarse Aggregate by Abrasion and Impact in the Los Angeles Machine
ASTM C 136	(2001) Sieve Analysis of Fine and Coarse Aggregates
ASTM D 75	(1997) Sampling Aggregates
ASTM D 2487	(2000) Classification of Soils for Engineering Purposes (Unified Soil

	Classification System)
ASTM D 2922	(2001) Density of Soil and Soil-Aggregate in Place by Nuclear Methods (Shallow Depth)
ASTM D 3017	(2001) Water Content of Soil and Rock in Place by Nuclear Methods (Shallow Depth)
ASTM D 4318	(2000) Liquid Limit, Plastic Limit, and Plasticity Index of Soils
ASTM E 11	(2001) Wire-Cloth Sieves for Testing Purposes

1.2 DEFINITIONS

For the purposes of this specification, the following definitions apply.

1.2.1 Aggregate Base Course

Aggregate base course (ABC) is well graded, durable aggregate uniformly moistened and mechanically stabilized by compaction.

1.2.2 Degree of Compaction

Degree of compaction shall be expressed as a percentage of the maximum density obtained by the test procedure presented in AASHTO T 180, Method D and corrected with AASHTO T 224.

1.3 SUBMITTALS

Government approval is required for submittals with a "G" designation; submittals not having a "G" designation are for information only. When used, a designation following the "G" designation identifies the office that will review the submittal for the Government. The following shall be submitted in accordance with Section 01330, SUBMITTAL PROCEDURES:

SD-03 Product Data

Plant, Equipment, and Tools;

List of proposed equipment to be used in performance of construction work, including descriptive data.

SD-06 Test Reports

Sampling and testing;

Field Density Tests;

Calibration curves and related test results prior to using the device or equipment being calibrated. Copies of field test results within 24 hours after the tests are performed. Certified copies of test results for approval not less than 15 days before

material is required for the work.

1.4 SAMPLING AND TESTING

Sampling and testing shall be the responsibility of the Contractor. Sampling and testing shall be performed by a testing laboratory approved in accordance with Section 01451 CONTRACTOR QUALITY CONTROL. Work requiring testing will not be permitted until the testing laboratory has been inspected and approved. The materials shall be tested to establish compliance with the specified requirements; testing shall be performed at the specified frequency. The Contracting Officer may specify the time and location of the tests. Copies of test results shall be furnished to the Contracting Officer within 24 hours of completion of the tests.

1.4.1 Sampling

Samples for laboratory testing shall be taken in conformance with ASTM D 75. When deemed necessary, the sampling will be observed by the Contracting Officer.

1.4.2 Tests

The following tests shall be performed in conformance with the applicable standards listed.

1.4.2.1 Sieve Analysis

Sieve analysis shall be made in conformance with ASTM C 117 and ASTM C 136. Sieves shall conform to ASTM E 11.

1.4.2.2 Liquid Limit and Plasticity Index

Liquid limit and plasticity index shall be determined in accordance with ASTM D 4318.

1.4.2.3 Moisture-Density Determinations

The maximum density and optimum moisture content shall be determined in accordance with AASHTO T 180, Method D and corrected with AASHTO T 224. To maintain the same percentage of coarse material, the "remove and replace" procedure as described in the NOTE 8 in Paragraph 7.2 of AASHTO T 180 shall be used.

1.4.2.4 Field Density Tests

Density shall be field measured in accordance with ASTM D 2922. For the method presented in ASTM D 2922 the calibration curves and 10 percent of the tests and the shall be checked and adjusted if necessary using only the sand cone method as described in paragraph Calibration, of the ASTM publication. Tests performed in accordance with ASTM D 2922 result in a wet unit weight of soil and when using this method, ASTM D 3017 shall be used to determine the moisture content of the soil. The calibration curves furnished with the moisture gauges shall also be checked along with density calibration checks as described in ASTM D 3017. The calibration checks of

both the density and moisture gauges shall be made by the prepared containers of material method, as described in paragraph Calibration of ASTM D 2922, on each different type of material being tested at the beginning of a job and at intervals as directed.

1.4.2.5 Wear Test

Wear tests shall be made on ABC course material in conformance with ASTM C 131.

1.4.2.6 Soundness

Soundness tests shall be made on ABC in accordance with ASTM C 88.

1.4.2.7 Weight of Slag

Weight per cubic foot of slag shall be determined in accordance with ASTM C 29/C 29M on the ABC course material.

1.4.3 Testing Frequency

1.4.3.1 Initial Tests

One of each of the following tests shall be performed on the proposed material prior to commencing construction to demonstrate that the proposed material meets all specified requirements when furnished. If materials from more than one source are going to be utilized, this testing shall be completed for each source.

a. Sieve Analysis.

b. Liquid limit and plasticity index.

c. Moisture-density relationship.

d. Wear.

e. Soundness.

1.4.3.2 In Place Tests

Each of the following tests shall be performed on samples taken from the placed and compacted ABC. Samples shall be taken and tested at the rates indicated.

a. Density tests shall be performed on every lift of material placed and at a frequency of one set of tests for every 250 square yards, or portion thereof, of completed area.

b. Sieve Analysis shall be performed for every 500 tons, or portion thereof, of material placed.

c. Liquid limit and plasticity index tests shall be performed at the same frequency as the sieve analysis.

1.4.4 Approval of Material

The source of the material shall be selected 45 days prior to the time the material will be required in the work. Tentative approval of material will be based on initial test results. Final approval of the materials will be based on sieve analysis, liquid limit, and plasticity index tests performed on samples taken from the completed and fully compacted ABC.

1.5 WEATHER LIMITATIONS

Construction shall be done when the atmospheric temperature is above 35 degrees F. When the temperature falls below 35 degrees F, the Contractor shall protect all completed areas by approved methods against detrimental effects of freezing. Completed areas damaged by freezing, rainfall, or other weather conditions shall at no additional cost to the Government, be corrected to meet specified requirements.

1.6 PLANT, EQUIPMENT, AND TOOLS

All plant, equipment, and tools used in the performance of the work will be subject to approval before the work is started and shall be maintained in satisfactory working condition at all times. The equipment shall be adequate and shall have the capability of producing the required compaction, meeting grade controls, thickness control, and smoothness requirements as set forth herein.

PART 2 PRODUCTS

2.1 AGGREGATES

The ABC shall consist of clean, sound, durable particles of crushed stone, crushed slag, crushed gravel, crushed recycled concrete, angular sand, or other approved material. ABC shall be free of lumps of clay, organic matter, and other objectionable materials or coatings. The portion retained on the No. 4 sieve shall be known as coarse aggregate; that portion passing the No. 4 sieve shall be known as fine aggregate.

2.1.1 Coarse Aggregate

Coarse aggregates shall be angular particles of uniform density. When the coarse aggregate is supplied from more than one source, aggregate from each source shall meet the specified requirements and shall be stockpiled separately.

a. Crushed Gravel: Crushed gravel shall be manufactured by crushing gravels, and shall meet all the requirements specified below.

b. Crushed Stone: Crushed stone shall consist of freshly mined quarry rock, and shall meet all the requirements specified below.

c. Crushed Recycled Concrete: Crushed recycled concrete shall consist of previously hardened portland cement concrete or other concrete containing pozzolanic binder material. The recycled

material shall be free of all reinforcing steel, bituminous concrete surfacing, and any other foreign material and shall be crushed and processed to meet the required gradations for coarse aggregate. Crushed recycled concrete shall meet all other applicable requirements specified below.

2.1.1.1 Aggregate Base Course

ABC coarse aggregate shall not show more than 30 percent loss when subjected to the Los Angeles abrasion test in accordance with ASTM C 131. The amount of flat and elongated particles shall not exceed 30 percent. A flat particle is one having a ratio of width to thickness greater than 3; an elongated particle is one having a ratio of length to width greater than 3. In the portion retained on each sieve specified, the crushed aggregates shall contain at least 50 percent by weight of crushed pieces having two or more freshly fractured faces with the area of each face being at least equal to 75 percent of the smallest midsectional area of the piece. When two fractures are contiguous, the angle between planes of the fractures must be at least 30 degrees in order to count as two fractured faces. Crushed gravel shall be manufactured from gravel particles 50 percent of which, by weight, are retained on the maximum size sieve listed in TABLE 1.

2.1.2 Fine Aggregate

Fine aggregates shall be angular particles of uniform density. When the fine aggregate is supplied from more than one source, aggregate from each source shall meet the specified requirements.

2.1.2.1 Aggregate Base Course

ABC fine aggregate shall consist of screenings, angular sand, crushed recycled concrete fines, or other finely divided mineral matter processed or naturally combined with the coarse aggregate.

2.1.3 Gradation Requirements

The specified gradation requirements shall apply to the completed base course. The aggregates shall have a maximum size of 1 1/2 inches and shall be continuously well graded within the limits specified in TABLE 1. Sieves shall conform to ASTM E 11.

TABLE I. GRADATION OF AGGREGATES

Percentage by Weight Passing Square-Mesh Sieve

Sieve Designation	No. 1	No. 2	No. 3
2 inch	100	----	----
1-1/2 inch	70-100	100	----
1 inch	45-80	60-100	100
1/2 inch	30-60	30-65	40-70
No. 4	20-50	20-50	20-50
No. 10	15-40	15-40	15-40

TABLE I. GRADATION OF AGGREGATES

Percentage by Weight Passing Square-Mesh Sieve

Sieve Designation	No. 1	No. 2	No. 3
No. 40	5-25	5-25	5-25
No. 200	0-8	0-8	0-8

NOTE 1: Particles having diameters less than 0.0008 inch shall not be in excess of 3 percent by weight of the total sample tested.

NOTE 2: The values are based on aggregates of uniform specific gravity. If materials from different sources are used for the coarse and fine aggregates, they shall be tested in accordance with ASTM C 127 and ASTM C 128 to determine their specific gravities. If the specific gravities vary by more than 10 percent, the percentages passing the various sieves shall be corrected as directed by the Contracting Officer.

2.1.4 Liquid Limit and Plasticity Index

Liquid limit and plasticity index requirements shall apply to the completed course and shall also apply to any component that is blended to meet the required gradation. The portion of any component or of the completed course passing the No. 40 sieve shall be either nonplastic or have a liquid limit not greater than 25 and a plasticity index not greater than 5.

PART 3 EXECUTION

3.1 GENERAL REQUIREMENTS

When the ABC is constructed in more than one layer, the previously constructed layer shall be cleaned of loose and foreign matter by sweeping with power sweepers or power brooms, except that hand brooms may be used in areas where power cleaning is not practicable. Adequate drainage shall be provided during the entire period of construction to prevent water from collecting or standing on the working area. Line and grade stakes shall be provided as necessary for control. Grade stakes shall be in lines parallel to the centerline of the area under construction and suitably spaced for string lining.

3.2 OPERATION OF AGGREGATE SOURCES

Aggregate sources shall be cleared, stripped and excavated to working depths producing excavation faces that are as nearly vertical as practicable for the materials being excavated. Strata of unsuitable materials overlying or occurring in the deposit shall be wasted at no additional cost to the Government. Methods of operating aggregate sources, and the processing and blending of the materials, shall be changed or modified if necessary to obtain material conforming to the specified requirements. Upon completion of the work, aggregate sources shall be conditioned to drain readily and be left in a satisfactory condition.

Aggregates may also be obtained from offsite sources.

3.3 STOCKPILING MATERIAL

Prior to stockpiling of material, storage sites shall be cleared and leveled by the Contractor. All materials, including approved material available from excavation and grading, shall be stockpiled in the manner and at the locations designated. Aggregates shall be stockpiled on the cleared and leveled areas designated by the Contracting Officer to prevent segregation. Materials obtained from different sources shall be stockpiled separately.

3.4 PREPARATION OF UNDERLYING COURSE

Prior to constructing the ABC, the underlying course or subgrade shall be cleaned of all foreign substances. At the time of construction of the ABC, the underlying course shall contain no frozen material. The surface of the underlying course or subgrade shall meet specified compaction and surface tolerances. The underlying course shall conform to Section 02300 EARTHWORK. Ruts or soft yielding spots in the underlying courses, areas having inadequate compaction, and deviations of the surface from the requirements set forth herein shall be corrected by loosening and removing soft or unsatisfactory material and by adding approved material, reshaping to line and grade, and recompacting to specified density requirements. For cohesionless underlying courses containing sands or gravels, as defined in ASTM D 2487, the surface shall be stabilized prior to placement of the ABC. Stabilization shall be accomplished by mixing ABC into the underlying course and compacting by approved methods. The stabilized material shall be considered as part of the underlying course and shall meet all requirements of the underlying course. The finished underlying course shall not be disturbed by traffic or other operations and shall be maintained by the Contractor in a satisfactory condition until the ABC is placed.

3.5 INSTALLATION

3.5.1 Mixing the Materials

The coarse and fine aggregates shall be mixed in a stationary plant, or in a traveling plant or bucket loader on an approved paved working area. The Contractor shall make adjustments in mixing procedures or in equipment as directed to obtain true grades, to minimize segregation or degradation, to obtain the required water content, and to insure a satisfactory ABC meeting all requirements of this specification.

3.5.2 Placing

The mixed material shall be placed on the prepared subgrade or subbase in layers of uniform thickness with an approved spreader. When a compacted layer 6 inches or less in thickness is required, the material shall be placed in a single layer. When a compacted layer in excess of 6 inches is required, the material shall be placed in layers of equal thickness. No layer shall exceed 6 inches or less than 3 inches when compacted. The layers shall be so placed that when compacted they will be true to the

grades or levels required with the least possible surface disturbance. Where the ABC is placed in more than one layer, the previously constructed layers shall be cleaned of loose and foreign matter by sweeping with power sweepers, power brooms, or hand brooms, as directed. Such adjustments in placing procedures or equipment shall be made as may be directed to obtain true grades, to minimize segregation and degradation, to adjust the water content, and to insure an acceptable ABC.

3.5.3 Grade Control

The finished and completed ABC shall conform to the lines, grades, and cross sections shown. Underlying material(s) shall be excavated and prepared at sufficient depth for the required ABC thickness so that the finished ABC with the subsequent surface course will meet the designated grades.

3.5.4 Edges of Base Course

The ABC shall be placed so that the completed section will be a minimum of 6 feet wider, on all sides, than the next layer that will be placed above it. Additionally, approved fill material shall be placed along the outer edges of ABC in sufficient quantities to compact to the thickness of the course being constructed, or to the thickness of each layer in a multiple layer course, allowing in each operation at least a 2 foot width of this material to be rolled and compacted simultaneously with rolling and compacting of each layer of ABC. If this base course material is to be placed adjacent to another pavement section, then the layers for both of these sections shall be placed and compacted along this edge at the same time.

3.5.5 Compaction

Each layer of the ABC shall be compacted as specified with approved compaction equipment. Water content shall be maintained during the compaction procedure to within plus or minus 2 percent of the optimum water content determined from laboratory tests as specified in paragraph SAMPLING AND TESTING. Rolling shall begin at the outside edge of the surface and proceed to the center, overlapping on successive trips at least one-half the width of the roller. Alternate trips of the roller shall be slightly different lengths. Speed of the roller shall be such that displacement of the aggregate does not occur. In all places not accessible to the rollers, the mixture shall be compacted with hand-operated power tampers. Compaction shall continue until each layer has a degree of compaction that is at least 95 percent of laboratory maximum density through the full depth of the layer. The Contractor shall make such adjustments in compacting or finishing procedures as may be directed to obtain true grades, to minimize segregation and degradation, to reduce or increase water content, and to ensure a satisfactory ABC. Any materials that are found to be unsatisfactory shall be removed and replaced with satisfactory material or reworked, as directed, to meet the requirements of this specification.

3.5.6 Thickness

Compacted thickness of the aggregate course shall be as indicated. No

individual layer shall exceed 6 inches nor be less than 3 inches in compacted thickness. The total compacted thickness of the ABC course shall be within 1/2 inch of the thickness indicated. Where the measured thickness is more than 1/2 inch deficient, such areas shall be corrected by scarifying, adding new material of proper gradation, reblading, and recompacting as directed. Where the measured thickness is more than 1/2 inch thicker than indicated, the course shall be considered as conforming to the specified thickness requirements. Average job thickness shall be the average of all thickness measurements taken for the job, but shall be within 1/4 inch of the thickness indicated. The total thickness of the ABC course shall be measured at intervals in such a manner as to ensure one measurement for each 500 square yards of base course. Measurements shall be made in 3 inch diameter test holes penetrating the base course.

3.5.7 Proof Rolling

Proof rolling of the areas indicated shall be in addition to the compaction specified and shall consist of the application of 30 coverages with a heavy pneumatic-tired roller having four or more tires, each loaded to a minimum of 30,000 pounds and inflated to a minimum of 150 psi. In areas designated, proof rolling shall be applied to the top of the underlying material on which ABC is laid and to each layer of ABC. Water content of the underlying material shall be maintained at optimum or at the percentage directed from start of compaction to completion of proof rolling of that layer. Water content of each layer of the ABC shall be maintained at the optimum percentage directed from start of compaction to completion of proof rolling. Any ABC materials or any underlying materials that produce unsatisfactory results by proof rolling shall be removed and replaced with satisfactory materials, recompacted and proof rolled to meet these specifications at no additional expense to the Government.

3.5.8 Finishing

The surface of the top layer of ABC shall be finished after final compaction and proof rolling by cutting any overbuild to grade and rolling with a steel-wheeled roller. Thin layers of material shall not be added to the top layer of base course to meet grade. If the elevation of the top layer of ABC is 1/2 inch or more below grade, then the top layer should be scarified to a depth of at least 3 inches and new material shall be blended in and compacted to bring to grade. Adjustments to rolling and finishing procedures shall be made as directed to minimize segregation and degradation, obtain grades, maintain moisture content, and insure an acceptable base course. Should the surface become rough, corrugated, uneven in texture, or traffic marked prior to completion, the unsatisfactory portion shall be scarified, reworked and recompacted or it shall be replaced as directed.

3.5.9 Smoothness

The surface of the top layer shall show no deviations in excess of 3/8 inch when tested with a 10 foot straightedge. Measurements shall be taken in successive positions parallel to the centerline of the area to be paved. Measurements shall also be taken perpendicular to the centerline at 50 foot intervals. Deviations exceeding this amount shall be corrected by removing

material and replacing with new material, or by reworking existing material and compacting it to meet these specifications.

3.6 TRAFFIC

Completed portions of the ABC course may be opened to limited traffic, provided there is no marring or distorting of the surface by the traffic. Heavy equipment shall not be permitted except when necessary to construction, and then the area shall be protected against marring or damage to the completed work.

3.7 MAINTENANCE

The ABC shall be maintained in a satisfactory condition until the full pavement section is completed and accepted. Maintenance shall include immediate repairs to any defects and shall be repeated as often as necessary to keep the area intact. Any ABC that is not paved over prior to the onset of winter, shall be retested to verify that it still complies with the requirements of this specification. Any area of ABC that is damaged shall be reworked or replaced as necessary to comply with this specification.

3.8 DISPOSAL OF UNSATISFACTORY MATERIALS

Any unsuitable materials that must be removed shall be disposed of as directed. No additional payments will be made for materials that must be replaced.

-- End of Section --

SECTION TABLE OF CONTENTS

DIVISION 02 - SITE WORK

SECTION 02741

HOT-MIX ASPHALT (HMA) FOR ROADS

PART 1 GENERAL

1.1 REFERENCES
1.2 DESCRIPTION OF WORK
1.3 SUBMITTALS
1.4 ASPHALT MIXING PLANT
1.5 HAULING EQUIPMENT
1.6 ASPHALT PAVERS
1.6.1 Receiving Hopper
1.6.2 Automatic Grade Controls
1.7 ROLLERS
1.8 WEATHER LIMITATIONS

PART 2 PRODUCTS

2.1 AGGREGATES
2.1.1 Coarse Aggregate
2.1.2 Fine Aggregate
2.1.3 Mineral Filler
2.1.4 Aggregate Gradation
2.2 ASPHALT CEMENT BINDER
2.3 MIX DESIGN
2.3.1 JMF Requirements
2.3.2 Adjustments to Field JMF
2.4 RECYCLED HOT MIX ASPHALT
2.4.1 RAP Aggregates and Asphalt Cement
2.4.2 RAP Mix

PART 3 EXECUTION

3.1 PREPARATION OF ASPHALT BINDER MATERIAL
3.2 PREPARATION OF MINERAL AGGREGATE
3.3 PREPARATION OF HOT-MIX ASPHALT MIXTURE
3.4 PREPARATION OF THE UNDERLYING SURFACE
3.5 TEST SECTION
3.5.1 Sampling and Testing for Test Section
3.5.2 Additional Test Sections
3.6 TESTING LABORATORY
3.7 TRANSPORTING AND PLACING
3.7.1 Transporting
3.7.2 Placing
3.8 COMPACTION OF MIXTURE
3.9 JOINTS
3.9.1 Transverse Joints
3.10 CONTRACTOR QUALITY CONTROL

3.10.1 General Quality Control Requirements
3.10.2 Testing Laboratory
3.10.3 Quality Control Testing
3.10.3.1 Asphalt Content
3.10.3.2 Gradation
3.10.3.3 Temperatures
3.10.3.4 Aggregate Moisture
3.10.3.5 Moisture Content of Mixture
3.10.3.6 Laboratory Air Voids, Marshall Stability and Flow
3.10.3.7 In-Place Density
3.10.3.8 Grade and Smoothness
3.10.3.9 Additional Testing
3.10.3.10 QC Monitoring
3.10.4 Sampling
3.10.5 Control Charts
3.11 MATERIAL ACCEPTANCE AND PERCENT PAYMENT
3.11.1 Percent Payment
3.11.2 Sublot Sampling
3.11.3 Additional Sampling and Testing
3.11.4 Laboratory Air Voids
3.11.5 Mean Absolute Deviation
3.11.6 In-place Density
3.11.6.1 General Density Requirements
3.11.6.2 Densities
3.11.7 Grade
3.11.8 Surface Smoothness
3.11.8.1 Smoothness Requirements
3.11.8.2 Testing Method
3.11.8.3 Payment Adjustment for Smoothness

-- End of Section Table of Contents --

SECTION 02741

HOT-MIX ASPHALT (HMA) FOR ROADS

PART 1 GENERAL

1.1 REFERENCES

The publications listed below form a part of this specification to the extent referenced. The publications are referred to in the text by basic designation only.

AMERICAN ASSOCIATION OF STATE HIGHWAY AND TRANSPORTATION OFFICIALS (AASHTO)

AASHTO MP 1	(1998)Provisional Specification for Performance Graded Asphalt Binder
AASHTO MP 2	(1998; Interim 1999) Superpave Volumetric Mix Design
AASHTO TP53	(2000) Determining Asphalt Content of Hot Mix Asphalt by the Ignition Method

ASTM INTERNATIONAL (ASTM)

ASTM C 29/C 29M	(1997) Bulk Density ("Unit Weight") and Voids in Aggregates
ASTM C 88	(1999a) Soundness of Aggregates by Use of Sodium Sulfate or Magnesium Sulfate
ASTM C 117	(1995) Materials Finer Than 75 micrometer (No. 200) Sieve in Mineral Aggregates by Washing
ASTM C 131	(2001) Resistance to Degradation of Small-Size Coarse Aggregate by Abrasion and Impact in the Los Angeles Machine
ASTM C 136	(2001) Sieve Analysis of Fine and Coarse Aggregates
ASTM C 566	(1997) Total Evaporable Moisture Content of Aggregate by Drying
ASTM C 1252	(1998) Uncompacted Void Content of Fine Aggregate (as Influenced by Particle Shape, Surface Texture, and Grading)

ASTM D 140	(2001) Sampling Bituminous Materials
ASTM D 242	(1995; R 2000el) Mineral Filler for Bituminous Paving Mixtures
ASTM D 995	(1995b) Mixing Plants for Hot-Mixed, Hot-Laid Bituminous Paving Mixtures
ASTM D 1461	(1985; R 2001) Moisture or Volatile Distillates in Bituminous Paving Mixtures
ASTM D 1559	(1989) Resistance to Plastic Flow of Bituminous Mixtures Using Marshall Apparatus
ASTM D 2041	(2000) Theoretical Maximum Specific Gravity and Density of Bituminous Paving Mixtures
ASTM D 2172	(2001el) Quantitative Extraction of Bitumen from Bituminous Paving Mixtures
ASTM D 2419	(1995) Sand Equivalent Value of Soils and Fine Aggregate
ASTM D 2489	(2000) Degree of Particle Coating of Bituminous-Aggregate Mixtures
ASTM D 2726	(2000) Bulk Specific Gravity and Density of Non-Absorptive Compacted Bituminous Mixture
ASTM D 2950	(1991; R 1997) Density of Bituminous Concrete in Place by Nuclear Method
ASTM D 3665	(1999) Random Sampling of Construction Materials
ASTM D 3666	(2001) Minimum Requirements for Agencies Testing and Inspecting Bituminous Paving Materials
ASTM D 4125	(1994; R 2000) Asphalt Content of Bituminous Mixtures by the Nuclear Method
ASTM D 4791	(1999) Flat Particles, Elongated Particles, or Flat and Elongated Particles in Coarse Aggregate
ASTM D 4867/D 4867M	(1996) Effect of Moisture on Asphalt Concrete Paving Mixtures
ASTM D 5444	(1998) Mechanical Size Analysis of

	Extracted Aggregate
ASTM D 6307	(1998) Asphalt Content of Hot Mix Asphalt by Ignition Method

ASPHALT INSTITUTE (AI)

AI MS-2	(6th Edition; R 1997) Mix Design Methods for Asphalt Concrete and Other Hot-Mix Types
AI MS-22	(2nd Edition; R 2001) Construction of Hot-Mix Asphalt Pavements

U.S. ARMY CORPS OF ENGINEERS (USACE)

COE CRD-C 171	(1995) Test Method for Determining Percentage of Crushed Particles in Aggregate

1.2 DESCRIPTION OF WORK

The work shall consist of pavement courses composed of mineral aggregate and asphalt material heated and mixed in a central mixing plant and placed on a prepared course. HMA designed and constructed in accordance with this section shall conform to the lines, grades, thicknesses, and typical cross sections shown on the Drawings. Each course shall be constructed to the depth, section, or elevation required by the Drawings and shall be rolled, finished, and approved before the placement of the next course.

1.3 SUBMITTALS

Government approval is required for submittals with a "G" designation; submittals not having a "G" designation are for information only. When used, a designation following the "G" designation identifies the office that will review the submittal for the Government. The following shall be submitted in accordance with Section 01330 SUBMITTAL PROCEDURES:

SD-03 Product Data

Mix Design; G, RE.

Proposed Job Mix Formula (JMF).

Contractor Quality Control; G, RE

Quality control plan.

Material Acceptance and Percent Payment; G, RE

Acceptance test results and pay calculations.

SD-04 Samples

Asphalt Cement Binder

5 gallon sample for mix design verification.

Aggregates

Sufficient materials to produce 200 lbof blended mixture for mix design verification.

SD-06 Test Reports

Aggregates; G, RE.
QC Monitoring

Aggregate and QC test results.

SD-07 Certificates

Asphalt Cement Binder; G, RE.

Copies of certified test data.

Testing Laboratory

Certification of compliance.

Plant Scale Calibration Certification

1.4 ASPHALT MIXING PLANT

Plants used for the preparation of hot-mix asphalt shall conform to the requirements of ASTM D 995 with the following changes:

a. Truck Scales. The asphalt mixture shall be weighed on approved certified scales at the Contractor's expense. Scales shall be inspected and sealed at least annually by an approved calibration laboratory.

b. Testing Facilities. The Contractor shall provide laboratory facilities at the plant for the use of the Government's acceptance testing and the Contractor's quality control testing.

c. Inspection of Plant. The Contracting Officer shall have access at all times, to all areas of the plant for checking adequacy of equipment; inspecting operation of the plant; verifying weights, proportions, and material properties; checking the temperatures maintained in the preparation of the mixtures and for taking samples. The Contractor shall provide assistance as requested, for the Government to procure any desired samples.

d. Storage Bins. Use of storage bins for temporary storage of hot-mix asphalt will be permitted as follows:

1. The asphalt mixture may be stored in non-insulated storage bins for a period of time not exceeding 3 hours.

2. The asphalt mixture may be stored in insulated storage bins for a period of time not exceeding 8 hours. The mix drawn from bins shall meet the same requirements as mix loaded directly into trucks.

1.5 HAULING EQUIPMENT

Trucks used for hauling hot-mix asphalt shall have tight, clean, and smooth metal beds. To prevent the mixture from adhering to them, the truck beds shall be lightly coated with a minimum amount of paraffin oil, lime solution, or other approved material. Petroleum based products shall not be used as a release agent. Each truck shall have a suitable cover to protect the mixture from adverse weather. When necessary to ensure that the mixture will be delivered to the site at the specified temperature, truck beds shall be insulated or heated and covers (tarps) shall be securely fastened. Tarps shall be secured so that the load is completely and not partially covered.

1.6 ASPHALT PAVERS

Asphalt pavers shall be self-propelled, with an activated screed, heated as necessary, and shall be capable of spreading and finishing courses of hot-mix asphalt which will meet the specified thickness, smoothness, and grade. The paver shall have sufficient power to propel itself and the hauling equipment without adversely affecting the finished surface.

1.6.1 Receiving Hopper

The paver shall have a receiving hopper of sufficient capacity to permit a uniform spreading operation. The hopper shall be equipped with a distribution system to place the mixture uniformly in front of the screed without segregation. The screed shall effectively produce a finished surface of the required evenness and texture without tearing, shoving, or gouging the mixture.

1.6.2 Automatic Grade Controls

If an automatic grade control device is used, the paver shall be equipped with a control system capable of automatically maintaining the specified screed elevation. The control system shall be automatically actuated from either a reference line and/or through a system of mechanical sensors or sensor-directed mechanisms or devices which will maintain the paver screed at a predetermined transverse slope and at the proper elevation to obtain the required surface. The transverse slope controller shall be capable of maintaining the screed at the desired slope within plus or minus 0.1 percent. A transverse slope controller shall not be used to control grade. The controls shall be capable of working in conjunction with any of the following attachments:

a. Ski-type device of not less than 30 feet in length.

b. Taut stringline set to grade.

c. Short ski or shoe for joint matching.

d. Laser control.

1.7 ROLLERS

Rollers shall be in good condition and shall be operated at slow speeds to avoid displacement of the asphalt mixture. The number, type, and weight of rollers shall be sufficient to compact the mixture to the required density while it is still in a workable condition. Equipment which causes excessive crushing of the aggregate shall not be used.

1.8 WEATHER LIMITATIONS

The hot-mix asphalt shall not be placed upon a wet surface or when the surface temperature of the underlying course is less than specified in Table 1. The temperature requirements may be waived by the Contracting Officer, if requested; however, all other requirements, including compaction, shall be met.

Table 1. Surface Temperature Limitations of Underlying Course

Mat Thickness, inches	Degrees F
3 or greater	40
Less than 3	45

When rain occurs at the paving site, the Contracting Officer shall use judgement in determining whether or not paving shall continue. If the existing pavement surface however, contains puddles of water, placement of HMA should not be continued.

PART 2 PRODUCTS

2.1 AGGREGATES

Aggregates shall consist of crushed stone, crushed gravel, crushed slag, screenings, natural sand and mineral filler, as required. The portion of material retained on the No. 4 sieve is coarse aggregate. The portion of material passing the No. 4 sieve and retained on the No. 200 sieve is fine aggregate. The portion passing the No. 200 sieve is defined as mineral filler. All aggregate test results and samples shall be submitted to the Contracting Officer at least 14 days prior to start of construction.

2.1.1 Coarse Aggregate

Coarse aggregate shall consist of sound, tough, durable particles, free from films of material that would prevent thorough coating and bonding with the asphalt material and free from organic matter and other deleterious substances. All individual coarse aggregate sources shall meet the following requirements:

a. The percentage of loss shall not be greater than 40 percent after 500 revolutions when tested in accordance with ASTM C 131.

b. The percentage of loss shall not be greater than 18 percent after five cycles when tested in accordance with ASTM C 88 using magnesium sulfate or 12 percent when using sodium sulfate.

c. At least 75 percent by weight of coarse aggregate shall have at least two or more fractured faces when tested in accordance with COE CRD-C 171. Fractured faces shall be produced by crushing.

d. The particle shape shall be essentially cubical and the aggregate shall not contain more than 20% percent, by weight, of flat and elongated particles (3:1 ratio of maximum to minimum) when tested in accordance with ASTM D 4791.

e. Slag shall be air-cooled, blast furnace slag, and shall have a compacted weight of not less than 75 lb/cu ft when tested in accordance with ASTM C 29/C 29M.

2.1.2 Fine Aggregate

Fine aggregate shall consist of clean, sound, tough, durable particles. The aggregate particles shall be free from coatings of clay, silt, or any objectionable material and shall contain no clay balls. All individual fine aggregate sources shall have a sand equivalent value not less than 45 when tested in accordance with ASTM D 2419.

The fine aggregate portion of the blended aggregate shall have an uncompacted void content not less than 43.0 percent when tested in accordance with ASTM C 1252 Method A.

2.1.3 Mineral Filler

Mineral filler shall be nonplastic material meeting the requirements of ASTM D 242.

2.1.4 Aggregate Gradation

The combined aggregate gradation shall conform to gradations specified in Table 2, when tested in accordance with ASTM C 136 and ASTM C 117, and shall not vary from the low limit on one sieve to the high limit on the adjacent sieve or vice versa, but grade uniformly from coarse to fine.

Table 2. Aggregate Gradations

Sieve Size, inch	Gradation 1 Percent Passing by Mass	Gradation 2 Percent Passing by Mass	Gradation 3 Percent Passing by Mass
1	100	---	---
3/4	76-96	100	---
1/2	68-88	76-96	100
3/8	60-82	69-89	76-96
No. 4	45-67	53-73	58-78

Table 2. Aggregate Gradations

Sieve Size, inch	Gradation 1 Percent Passing by Mass	Gradation 2 Percent Passing by Mass	Gradation 3 Percent Passing by Mass
No. 8	32-54	38-60	40-60
No. 16	22-44	26-48	28-48
No. 30	15-35	18-38	18-38
No. 50	9-25	11-27	11-27
No. 100	6-18	6-18	6-18
No. 200	3-6	3-6	3-6

2.2 ASPHALT CEMENT BINDER

Asphalt cement binder shall conform to AASHTO MP 1 Performance Grade (PG) 70-10. Test data indicating grade certification shall be provided by the supplier at the time of delivery of each load to the mix plant. Copies of these certifications shall be submitted to the Contracting Officer. The supplier is defined as the last source of any modification to the binder. The Contracting Officer may sample and test the binder at the mix plant at any time before or during mix production. Samples for this verification testing shall be obtained by the Contractor in accordance with ASTM D 140 and in the presence of the Contracting Officer. These samples shall be furnished to the Contracting Officer for the verification testing, which shall be at no cost to the Contractor. Samples of the asphalt cement specified shall be submitted for approval not less than 14 days before start of the test section.

2.3 MIX DESIGN

The Contractor shall develop the mix design. The asphalt mix shall be composed of a mixture of well-graded aggregate, mineral filler if required, and asphalt material. The aggregate fractions shall be sized, handled in separate size groups, and combined in such proportions that the resulting mixture meets the grading requirements of the job mix formula (JMF). No hot-mix asphalt for payment shall be produced until a JMF has been approved. The hot-mix asphalt shall be designed using procedures contained in AI MS-2 and the criteria shown in Table 3. If the Tensile Strength Ratio (TSR) of the composite mixture, as determined by ASTM D 4867/D 4867M is less than 75, the aggregates shall be rejected or the asphalt mixture treated with an approved anti-stripping agent. The amount of anti-stripping agent added shall be sufficient to produce a TSR of not less than 75. If an antistrip agent is required, it shall be provided by the Contractor at no additional cost. Sufficient materials to produce 200 pound of blended mixture shall be provided to the Contracting Officer for verification of mix design at least 14 days prior to construction of test section.

At the option of the Contractor a currently used DOT superpave hot mix may be used in lieu of developing a new hot mix design study as described herein. The superpave volumetric mix shall be designed in accordance with AASHTO MP 2.

2.3.1 JMF Requirements

The job mix formula shall be submitted in writing by the Contractor for approval at least 14 days prior to the start of the test section and shall include as a minimum:

a. Percent passing each sieve size.

b. Percent of asphalt cement.

c. Percent of each aggregate and mineral filler to be used.

d. Asphalt viscosity grade, penetration grade, or performance grade.

e. Number of blows of hammer per side of molded specimen.

f. Laboratory mixing temperature.

g. Lab compaction temperature.

h. Temperature-viscosity relationship of the asphalt cement.

i. Plot of the combined gradation on the 0.45 power gradation chart, stating the nominal maximum size.

j. Graphical plots of stability, flow, air voids, voids in the mineral aggregate, and unit weight versus asphalt content as shown in AI MS-2.

k. Specific gravity and absorption of each aggregate.

l. Percent natural sand.

m. Percent particles with 2 or more fractured faces (in coarse aggregate).

n. Fine aggregate angularity.

o. Percent flat or elongated particles (in coarse aggregate).

p. Tensile Strength Ratio(TSR).

q. Antistrip agent (if required) and amount.

r. List of all modifiers and amount.

s. Percentage and properties (asphalt content, binder properties, and aggregate properties) of reclaimed asphalt pavement (RAP) in accordance with paragraph RECYCLED HOT-MIX ASPHALT, if RAP is used.

Table 3. Marshall Design Criteria

Test Property	75 Blow Mix	50 Blow Mix
Stability, pounds minimum	*1800	*1000
Flow, 0.01 inch	8-16	8-18
Air voids, percent	3-5	3-5
Percent Voids in mineral aggregate VMA, (minimum)		
Gradation 1	13.0	13.0
Gradation 2	14.0	14.0
Gradation 3	15.0	15.0
TSR, minimum percent	75	75

* This is a minimum requirement. The average during construction shall be significantly higher than this number to ensure compliance with the specifications.

** Calculate VMA in accordance with AI MS-2, based on ASTM D 2726 bulk specific gravity for the aggregate.

2.3.2 Adjustments to Field JMF

The Laboratory JMF for each mixture shall be in effect until a new formula is approved in writing by the Contracting Officer. Should a change in sources of any materials be made, a new laboratory JMF design shall be performed and a new JMF approved before the new material is used. The Contractor will be allowed to adjust the Laboratory JMF within the limits specified below to optimize mix volumetric properties with the approval of the Contracting Officer. Adjustments to the Laboratory JMF shall be applied to the field established JMF and limited to those values as shown. Adjustments shall be targeted to produce or nearly produce 4 percent voids total mix (VTM).

TABLE 4. Field (Plant) Established JMF Tolerances

Sieves	Adjustments (plus or minus), percent
No. 4	3
No. 8	3
No. 200	1
Binder Content	0.40

If adjustments are needed that exceed these limits, a new mix design shall be developed. Tolerances given above may permit the aggregate grading to

be outside the limits shown in Table 2; while not desirable, this is acceptable.

2.4 RECYCLED HOT MIX ASPHALT

Recycled HMA shall consist of reclaimed asphalt pavement (RAP), coarse aggregate, fine aggregate, mineral filler, and asphalt cement. The RAP shall be of a consistent gradation and asphalt content and properties. When RAP is fed into the plant, the maximum RAP chunk size shall not exceed 2 inches. The recycled HMA mix shall be designed using procedures contained in AI MS-2 and AI MS-22. The job mix shall meet the requirements of paragraph MIX DESIGN. The amount of RAP shall not exceed 30 percent.

2.4.1 RAP Aggregates and Asphalt Cement

The blend of aggregates used in the recycled mix shall meet the requirements of paragraph AGGREGATES. The percentage of asphalt in the RAP shall be established for the mixture design according to ASTM D 2172 using the appropriate dust correction procedure.

2.4.2 RAP Mix

The blend of new asphalt cement and the RAP asphalt binder shall meet the viscosity requirements in paragraph ASPHALT CEMENT BINDER. The virgin asphalt cement shall not be more than two standard asphalt material grades different than that specified in paragraph ASPHALT CEMENT BINDER.

PART 3 EXECUTION

3.1 PREPARATION OF ASPHALT BINDER MATERIAL

The asphalt cement material shall be heated avoiding local overheating and providing a continuous supply of the asphalt material to the mixer at a uniform temperature. The temperature of unmodified asphalts shall be no more than 325 degrees F when added to the aggregates. Modified asphalts shall be no more than 350 degrees F when added to the aggregates.

3.2 PREPARATION OF MINERAL AGGREGATE

The aggregate for the mixture shall be heated and dried prior to mixing. No damage shall occur to the aggregates due to the maximum temperature and rate of heating used. The temperature of the aggregate and mineral filler shall not exceed 350 degrees F when the asphalt cement is added. The temperature shall not be lower than is required to obtain complete coating and uniform distribution on the aggregate particles and to provide a mixture of satisfactory workability.

3.3 PREPARATION OF HOT-MIX ASPHALT MIXTURE

The aggregates and the asphalt cement shall be weighed or metered and introduced into the mixer in the amount specified by the JMF. The combined materials shall be mixed until the aggregate obtains a uniform coating of asphalt binder and is thoroughly distributed throughout the mixture. Wet mixing time shall be the shortest time that will produce a satisfactory

mixture, but no less than 25 seconds for batch plants. The wet mixing time for all plants shall be established by the Contractor, based on the procedure for determining the percentage of coated particles described in ASTM D 2489, for each individual plant and for each type of aggregate used. The wet mixing time will be set to at least achieve 95 percent of coated particles. The moisture content of all hot-mix asphalt upon discharge from the plant shall not exceed 0.5 percent by total weight of mixture as measured by ASTM D 1461.

3.4 PREPARATION OF THE UNDERLYING SURFACE

Immediately before placing the hot mix asphalt, the underlying course shall be cleaned of dust and debris. A tack coat shall be applied in accordance with the contract specifications.

3.5 TEST SECTION

Prior to full production, the Contractor shall place a test section for each JMF used. The Contractor shall construct a test section 250 - 500 feet long. The test section shall be of the same depth as the course which it represents. The underlying grade or pavement structure upon which the test section is to be constructed shall be the same as the remainder of the course represented by the test section. The equipment and personnel used in construction of the test section shall be the same equipment to be used on the remainder of the course represented by the test section. The test section shall be placed as part of the project pavement as approved by the Contracting Officer.

During construction of the test section, the Contractor shall establish rolling pattern needed to achieve desired pavement density levels. The rolling pattern found to be successful on the test section shall be used for all paving operation using the same mix design and equipment.

3.5.1 Sampling and Testing for Test Section

One random sample shall be taken at the plant, triplicate specimens compacted, and tested for stability, flow, and laboratory air voids. A portion of the same sample shall be tested for aggregate gradation and asphalt content. Four randomly selected cores shall be taken from the finished pavement mat and tested for density. Random sampling shall be in accordance with procedures contained in ASTM D 3665. The test results shall be within the tolerances shown in Table 5 for work to continue. If all test results meet the specified requirements, the test section shall remain as part of the project pavement. If test results exceed the tolerances shown, the test section shall be removed and replaced at no cost to the Government and another test section shall be constructed. The test section shall be paid for with the first lot of paving

Table 5. Test Section Requirements for Material and Mixture Properties

Property	Specification Limit
Aggregate Gradation-Percent Passing (Individual Test Result)	

Table 5. Test Section Requirements for Material and Mixture Properties

Property	Specification Limit
No. 4 and larger	JMF plus or minus 8
No. 8, No. 16, No. 30, and No. 50	JMF plus or minus 6
No. 100 and No. 200	JMF plus or minus 2.0
Asphalt Content, Percent (Individual Test Result)	JMF plus or minus 0.5
Laboratory Air Voids, Percent (Average of 3 specimens)	JMF plus or minus 1.0
VMA, Percent (Average of 3 specimens)	14 minimum
Stability, pounds (Average of 3 specimens)	1800 minimum
Flow, 0.01 inches (Average of 3 specimens)	8 - 16
Mat Density, Percent of Marshall (Average of 4 Random Cores)	97.0 - 100.5

3.5.2 Additional Test Sections

If the initial test section should prove to be unacceptable, the necessary adjustments to the JMF, plant operation, placing procedures, and/or rolling procedures shall be made. A second test section shall then be placed. Additional test sections, as required, shall be constructed and evaluated for conformance to the specifications. Full production shall not begin until an acceptable section has been constructed and accepted.

3.6 TESTING LABORATORY

The laboratory used to develop the JMF shall meet the requirements of ASTM D 3666. A certification signed by the manager of the laboratory stating that it meets these requirements or clearly listing all deficiencies shall be submitted to the Contracting Officer prior to the start of construction. The certification shall contain as a minimum:

a. Qualifications of personnel; laboratory manager, supervising technician, and testing technicians.

b. A listing of equipment to be used in developing the job mix.

c. A copy of the laboratory's quality control system.

d. Evidence of participation in the AASHTO Materials Reference Laboratory (AMRL) program.

3.7 TRANSPORTING AND PLACING

3.7.1 Transporting

The hot-mix asphalt shall be transported from the mixing plant to the site in clean, tight vehicles. Deliveries shall be scheduled so that placing and compacting of mixture is uniform with minimum stopping and starting of the paver. Adequate artificial lighting shall be provided for night placements. Hauling over freshly placed material will not be permitted until the material has been compacted as specified, and allowed to cool to 140 degrees F. To deliver mix to the paver, the Contractor shall use a material transfer vehicle which shall be operated to produce continuous forward motion of the paver.

3.7.2 Placing

The mix shall be placed and compacted at a temperature suitable for obtaining density, surface smoothness, and other specified requirements. Upon arrival, the mixture shall be placed to the full width by an asphalt paver; it shall be struck off in a uniform layer of such depth that, when the work is completed, it shall have the required thickness and conform to the grade and contour indicated. The speed of the paver shall be regulated to eliminate pulling and tearing of the asphalt mat. The mixture shall be placed in single pass with a minimum width of 12 feet. On isolated areas where irregularities or unavoidable obstacles make the use of mechanical spreading and finishing equipment impractical, the mixture may be spread and luted by hand tools.

3.8 COMPACTION OF MIXTURE

After placing, the mixture shall be thoroughly and uniformly compacted by rolling. The surface shall be compacted as soon as possible without causing displacement, cracking or shoving. The sequence of rolling operations and the type of rollers used shall be at the discretion of the Contractor. The speed of the roller shall, at all times, be sufficiently slow to avoid displacement of the hot mixture and be effective in compaction. Any displacement occurring as a result of reversing the direction of the roller, or from any other cause, shall be corrected at once. Sufficient rollers shall be furnished to handle the output of the plant. Rolling shall continue until the surface is of uniform texture, true to grade and cross section, and the required field density is obtained. To prevent adhesion of the mixture to the roller, the wheels shall be kept properly moistened but excessive water will not be permitted. In areas not accessible to the roller, the mixture shall be thoroughly compacted with hand tampers. Any mixture that becomes loose and broken, mixed with dirt, contains check-cracking, or is in any way defective shall be removed full depth, replaced with fresh hot mixture and immediately compacted to conform to the surrounding area. This work shall be done at the Contractor's expense. Skin patching will not be allowed.

3.9 JOINTS

The formation of joints shall be made ensuring a continuous bond between the courses and to obtain the required density. All joints shall have the same texture as other sections of the course and meet the requirements for smoothness and grade.

3.9.1 Transverse Joints

The roller shall not pass over the unprotected end of the freshly laid mixture, except when necessary to form a transverse joint. When necessary to form a transverse joint, it shall be made by means of placing a bulkhead or by tapering the course. The tapered edge shall be cut back to its full depth and width on a straight line to expose a vertical face prior to placing material at the joint. The cutback material shall be removed from the project. In both methods, all contact surfaces shall be given a light tack coat of asphalt material before placing any fresh mixture against the joint.

3.10 CONTRACTOR QUALITY CONTROL

3.10.1 General Quality Control Requirements

The Contractor shall develop an approved Quality Control Plan. Hot-mix asphalt for payment shall not be produced until the quality control plan has been approved. The plan shall address all elements which affect the quality of the pavement including, but not limited to:

a. Mix Design

b. Aggregate Grading

c. Quality of Materials

d. Stockpile Management

e. Proportioning

f. Mixing and Transportation

g. Mixture Volumetrics

h. Moisture Content of Mixtures

i. Placing and Finishing

j. Joints

k. Compaction

l. Surface Smoothness

3.10.2 Testing Laboratory

The Contractor shall provide a fully equipped asphalt laboratory located at the plant or job site. The laboratory shall meet the requirements as required in ASTM D 3666. The effective working area of the laboratory shall be a minimum of 150 square feet with a ceiling height of not less than 7.5 feet. Lighting shall be adequate to illuminate all working areas. It shall be equipped with heating and air conditioning units to maintain a

temperature of 75 degrees F plus or minus 5 degrees F. Laboratory facilities shall be kept clean and all equipment shall be maintained in proper working condition. The Contracting Officer shall be permitted unrestricted access to inspect the Contractor's laboratory facility, to witness quality control activities, and to perform any check testing desired. The Contracting Officer will advise the Contractor in writing of any noted deficiencies concerning the laboratory facility, equipment, supplies, or testing personnel and procedures. When the deficiencies are serious enough to adversely affect test results, the incorporation of the materials into the work shall be suspended immediately and will not be permitted to resume until the deficiencies are corrected.

3.10.3 Quality Control Testing

The Contractor shall perform all quality control tests applicable to these specifications and as set forth in the Quality Control Program. The testing program shall include, but shall not be limited to, tests for the control of asphalt content, aggregate gradation, temperatures, aggregate moisture, moisture in the asphalt mixture, laboratory air voids, stability, flow, in-place density, grade and smoothness. A Quality Control Testing Plan shall be developed as part of the Quality Control Program.

3.10.3.1 Asphalt Content

A minimum of two tests to determine asphalt content will be performed per lot (a lot is defined in paragraph MATERIAL ACCEPTANCE AND PERCENT PAYMENT) by one of the following methods: the extraction method in accordance with ASTM D 2172, Method A or B, the ignition method in accordance with the AASHTO TP53or ASTM D 6307, or the nuclear method in accordance with ASTM D 4125, provided the nuclear gauge is calibrated for the specific mix being used. For the extraction method, the weight of ash, as described in ASTM D 2172, shall be determined as part of the first extraction test performed at the beginning of plant production; and as part of every tenth extraction test performed thereafter, for the duration of plant production. The last weight of ash value obtained shall be used in the calculation of the asphalt content for the mixture.

3.10.3.2 Gradation

Aggregate gradations shall be determined a minimum of twice per lot from mechanical analysis of recovered aggregate in accordance with ASTM D 5444. When asphalt content is determined by the nuclear method, aggregate gradation shall be determined from hot bin samples on batch plants, or from the cold feed on drum mix plants. For batch plants, aggregates shall be tested in accordance with ASTM C 136 using actual batch weights to determine the combined aggregate gradation of the mixture.

3.10.3.3 Temperatures

Temperatures shall be checked at least four times per lot, at necessary locations, to determine the temperature at the dryer, the asphalt cement in the storage tank, the asphalt mixture at the plant, and the asphalt mixture at the job site.

3.10.3.4 Aggregate Moisture

The moisture content of aggregate used for production shall be determined a minimum of once per lot in accordance with ASTM C 566.

3.10.3.5 Moisture Content of Mixture

The moisture content of the mixture shall be determined at least once per lot in accordance with ASTM D 1461 or an approved alternate procedure.

3.10.3.6 Laboratory Air Voids, Marshall Stability and Flow

Mixture samples shall be taken at least four times per lot and compacted into specimens, using 75 blows per side with the Marshall hammer as described in ASTM D 1559. After compaction, the laboratory air voids of each specimen shall be determined, as well as the Marshall stability and flow.

3.10.3.7 In-Place Density

The Contractor shall conduct any necessary testing to ensure the specified density is achieved. A nuclear gauge may be used to monitor pavement density in accordance with ASTM D 2950.

3.10.3.8 Grade and Smoothness

The Contractor shall conduct the necessary checks to ensure the grade and smoothness requirements are met in accordance with paragraph MATERIAL ACCEPTANCE AND PERCENT PAYMENT.

3.10.3.9 Additional Testing

Any additional testing, which the Contractor deems necessary to control the process, may be performed at the Contractor's option.

3.10.3.10 QC Monitoring

The Contractor shall submit all QC test results to the Contracting Officer on a daily basis as the tests are performed. The Contracting Officer reserves the right to monitor any of the Contractor's quality control testing and to perform duplicate testing as a check to the Contractor's quality control testing.

3.10.4 Sampling

When directed by the Contracting Officer, the Contractor shall sample and test any material which appears inconsistent with similar material being produced, unless such material is voluntarily removed and replaced or deficiencies corrected by the Contractor. All sampling shall be in accordance with standard procedures specified.

3.10.5 Control Charts

For process control, the Contractor shall establish and maintain linear

control charts on both individual samples and the running average of last four samples for the parameters listed in Table 6, as a minimum. These control charts shall be posted as directed by the Contracting Officer and shall be kept current at all times. The control charts shall identify the project number, the test parameter being plotted, the individual sample numbers, the Action and Suspension Limits listed in Table 6 applicable to the test parameter being plotted, and the Contractor's test results. Target values from the JMF shall also be shown on the control charts as indicators of central tendency for the cumulative percent passing, asphalt content, and laboratory air voids parameters. When the test results exceed either applicable Action Limit, the Contractor shall take immediate steps to bring the process back in control. When the test results exceed either applicable Suspension Limit, the Contractor shall halt production until the problem is solved. The Contractor shall use the control charts as part of the process control system for identifying trends so that potential problems can be corrected before they occur. Decisions concerning mix modifications shall be made based on analysis of the results provided in the control charts. The Quality Control Plan shall indicate the appropriate action which shall be taken to bring the process into control when certain parameters exceed their Action Limits.

Table 6. Action and Suspension Limits for the Parameters to be Plotted on Individual and Running Average Control Charts

Parameter to be Plotted	Running Average of Individual Samples		Last Four Samples	
	Action Limit	Suspension Limit	Action Limit	Suspension Limit
No. 4 sieve, Cumulative % Passing, deviation from JMF target; plus or minus values	6	8	4	5
No. 30 sieve, Cumulative % Passing, deviation from JMF target; plus or minus values	4	6	3	4
No. 200 sieve, Cumulative % Passing, deviation from JMF target; plus or minus values	1.4	2.0	1.1	1.5
Stability, pounds (minimum)				
75 Blow JMF	1800	1700	1900	1800
50 Blow JMF	1000	900	1100	1000
Flow, 0.01 inches				
75 Blow	8 min. 16 max.	7 min. 17 max.	9 min. 15 max.	8 min. 16 max.
50 Blow	8 min. 18 max.	7 min. 19 max.	9 min. 17 max.	8 min. 18 max.
Asphalt content, % deviation from JMF target; plus or minus value	0.4	0.5	0.2	0.3
Laboratory Air Voids, % deviation from JMF target value	No specific action and suspension limits set since this parameter is used to determine percent payment			
In-place Mat Density, % of Marshall density	No specific action and suspension limits set since this parameter is used to determine percent payment			
In-place Joint Density, % of Marshall density	No specific action and suspension limits set since this parameter is used to determine percent payment			

3.11 MATERIAL ACCEPTANCE AND PERCENT PAYMENT

Testing for acceptability of work will be performed by an independent laboratory hired by the Contractor. Test results and payment calculations shall be forwarded daily to the Contracting Officer. Acceptance of the plant produced mix and in-place requirements will be on a lot to lot basis.

A standard lot for all requirements will be equal to 4 hours of production. Where appropriate, adjustment in payment for individual lots of hot-mix asphalt will be made based on in-place density, laboratory air voids, grade and smoothness in accordance with the following paragraphs. Grade and surface smoothness determinations will be made on the lot as a whole. Exceptions or adjustments to this will be made in situations where the mix within one lot is placed as part of both the intermediate and surface courses, thus grade and smoothness measurements for the entire lot cannot be made. In order to evaluate laboratory air voids and in-place (field) density, each lot will be divided into four equal sublots.

3.11.1 Percent Payment

When a lot of material fails to meet the specification requirements for 100 percent pay as outlined in the following paragraphs, that lot shall be removed and replaced, or accepted at a reduced price which will be computed by multiplying the unit price by the lot's pay factor. The lot pay factor is determined by taking the lowest computed pay factor based on either laboratory air voids, in-place density, grade or smoothness (each discussed below). At the end of the project, an average of all lot pay factors will be calculated. If this average lot pay factor exceeds 95.0 percent, then the percent payment for the entire project will be 100 percent of the unit bid price. If the average lot pay factor is less than 95.0 percent, then each lot will be paid for at the unit price multiplied by the lot's pay factor. For any lots which are less than 2000 tons, a weighted lot pay factor will be used to calculate the average lot pay factor.

3.11.2 Sublot Sampling

One random mixture sample for determining laboratory air voids, theoretical maximum density, and for any additional testing the Contracting Officer desires, will be taken from a loaded truck delivering mixture to each sublot, or other appropriate location for each sublot. All samples will be selected randomly, using commonly recognized methods of assuring randomness conforming to ASTM D 3665 and employing tables of random numbers or computer programs. Laboratory air voids will be determined from three laboratory compacted specimens of each sublot sample in accordance with ASTM D 1559. The specimens will be compacted within 2 hours of the time the mixture was loaded into trucks at the asphalt plant. Samples will not be reheated prior to compaction and insulated containers will be used as necessary to maintain the temperature.

3.11.3 Additional Sampling and Testing

The Contracting Officer reserves the right to direct additional samples and tests for any area which appears to deviate from the specification requirements. The cost of any additional testing will be paid for by the Government. Testing in these areas will be in addition to the lot testing, and the requirements for these areas will be the same as those for a lot.

3.11.4 Laboratory Air Voids

Laboratory air voids will be calculated by determining the Marshall density of each lab compacted specimen using ASTM D 2726 and determining the

theoretical maximum density of every other sublot sample using ASTM D 2041. Laboratory air void calculations for each sublot will use the latest theoretical maximum density values obtained, either for that sublot or the previous sublot. The mean absolute deviation of the four laboratory air void contents (one from each sublot) from the JMF air void content will be evaluated and a pay factor determined from Table 7. All laboratory air void tests will be completed and reported within 24 hours after completion of construction of each lot.

3.11.5 Mean Absolute Deviation

An example of the computation of mean absolute deviation for laboratory air voids is as follows: Assume that the laboratory air voids are determined from 4 random samples of a lot (where 3 specimens were compacted from each sample). The average laboratory air voids for each sublot sample are determined to be 3.5, 3.0, 4.0, and 3.7. Assume that the target air voids from the JMF is 4.0. The mean absolute deviation is then:

Mean Absolute Deviation = (|3.5 - 4.0| + |3.0 - 4.0| + |4.0 - 4.0| + |3.7 - 4.0|/4

= (0.5 + 1.0 + 0.0 + 0.3)/4 = (1.8)/4 = 0.45

The mean absolute deviation for laboratory air voids is determined to be 0.45. It can be seen from Table 7 that the lot's pay factor based on laboratory air voids, is 100 percent.

Table 7. Pay Factor Based on Laboratory Air Voids

Mean Absolute Deviation of Lab Air Voids from JMF	Pay Factor, %
0.60 or less	100
0.61 - 0.80	98
0.81 - 1.00	95
1.01 - 1.20	90
Above 1.20	reject (0)

3.11.6 In-place Density

3.11.6.1 General Density Requirements

For determining in-place density, one random core will be taken by the Government from the mat (interior of the lane) of each sublot, and one random core will be taken from the joint (immediately over joint) of each sublot. Each random core will be full thickness of the layer being placed. When the random core is less than 1 inch thick, it will not be included in the analysis. In this case, another random core will be taken. After air drying to a constant weight, cores obtained from the mat and from the joints will be used for in-place density determination.

3.11.6.2 Densities

The average in-place densities are expressed as a percentage of the average Marshall density for the lot. The Marshall density for each lot will be

determined as the average Marshall density of the four random samples (3 specimens compacted per sample). The average in-place density for a lot are determined and compared with Table 8 to calculate a single pay factor per lot based on in-place density, as described below. First, a pay factor for density are determined from Table 8. The pay factor for density is compared and the lowest selected. This selected pay factor is the pay factor based on density for the lot. All density results for a lot will be completed and reported within 24 hours after the construction of that lot.

Table 8. Pay Factor Based on In-place Density

Average Density (4 Cores)	Pay Factor, %
97.9 or 100	100.0
97.8 or 100.1	99.9
97.7	99.8
97.6 or100.2	99.6
97.5	99.4
97.4 or 100.3	99.1
97.3	98.7
97.2 or 100.4	98.3
97.1	97.8
97.0 or 100.5	97.3
96.9	96.3
96.8 or 100.6	94.1
96.7	92.2
96.6 or 100.7	90.3
96.5	87.9
96.4 or 100.8	85.7
96.3	83.3
96.2 or 100.9	80.6
96.1	78.0
96.0 or 101.0	75.0
below 96.0or above 101.0	0.0 (reject)

3.11.7 Grade

The base surface of pavement shall conform to the elevations and cross sections shown and shall vary not more than 1/4 inch from the plan grade established and approved at site of work. Finished surfaces at juncture with other pavements shall coincide with finished surfaces of abutting pavements. Deviation from the plan elevation will not be permitted in areas of pavements where closer conformance with planned elevation is required for the proper functioning of drainage and other appurtenant structures involved. The base surface of the pavement will be tested for conformance with specified plan grade requirements. The grade will be determined by running lines of levels at intervals of 50 feet, longitudinally and transversely, to determine the elevation of the completed pavement surface. Within 5 working days, after the completion of a particular lot incorporating the final wearing surface, the Contracting Officer will inform the Contractor in writing, of the results of the grade-conformance tests. When more than 5 percent of all measurements made within a lot are outside the 1/4 inch tolerance, the pay factor based on

grade for that lot will be 95 percent. In areas where the grade exceeds the tolerance by more than 50 percent, the Contractor shall remove the pavement full depth; the Contractor shall then replace the lift with hot-mix asphalt to meet specification requirements, at no additional cost to the Government. Diamond grinding may be used to remove high spots to meet grade requirements. Skin patching for correcting low areas or planing or milling for correcting high areas will not be permitted.

3.11.8 Surface Smoothness

The straightedge method to test and evaluate surface smoothness of the pavement. All testing shall be performed in the presence of the Contracting Officer. Detailed notes of the results of the testing shall be kept and a copy furnished to the Government immediately after each day's testing. The surface shall be finished to meet the approval of the Contracting Officer.

3.11.8.1 Smoothness Requirements

a. Straightedge Testing: The finished surfaces of the pavements shall have no abrupt change of 1/4 inch or more, and all pavements shall be within the tolerances specified in Table 9 when checked with an approved 12 foot straightedge.

Table 9. Straightedge Surface Smoothness--Pavements

Pavement Category	Direction of Testing	Tolerance, inches
All paved areas	Longitudinal	1/4
	Transverse	1/4

3.11.8.2 Testing Method

After the final rolling, but not later than 24 hours after placement, the surface of the pavement in each entire lot shall be tested by the Contractor in such a manner as to reveal all surface irregularities exceeding the tolerances specified above. Separate testing of individual sublots is not required. If any pavement areas are ground, these areas shall be retested immediately after grinding. The entire area of the pavement shall be tested in both a longitudinal and a transverse direction on parallel lines. The transverse lines shall be 12 feet or less apart, as directed. The longitudinal lines shall be at the centerline of the paving lane. Other areas having obvious deviations shall also be tested. Longitudinal testing lines shall be continuous across all joints.

a. Straightedge Testing. The straightedge shall be held in contact with the surface and moved ahead one-half the length of the straightedge for each successive measurement. The amount of surface irregularity shall be determined by placing the freestanding (unleveled) straightedge on the pavement surface and allowing it to rest upon the two highest spots covered by its length, and measuring the maximum gap between the straightedge and the pavement surface in the area between these two high points.

3.11.8.3 Payment Adjustment for Smoothness

a. Straightedge Testing. Location and deviation from straightedge for all measurements shall be recorded. When between 5.0 and 10.0 percent of all measurements made within a lot exceed the tolerance specified in paragraph Smoothness Requirements above, after any reduction of high spots or removal and replacement, the computed pay factor for that lot based on surface smoothness, will be 95 percent. When more than 10.0 percent of all measurements exceed the tolerance, the computed pay factor will be 90 percent. When between 15.0 and 20.0 percent of all measurements exceed the tolerance, the computed pay factor will be 75 percent. When 20.0 percent or more of the measurements exceed the tolerance, the lot shall be removed and replaced at no additional cost to the Government. Regardless of the above, any small individual area with surface deviation which exceeds the tolerance given above by more than 50 percent, shall be corrected by diamond grinding to meet the specification requirements above or shall be removed and replaced at no additional cost to the Government.

c. Bumps ("Must Grind" Areas). Any bumps ("must grind" areas) shown on the straightedge test trace exceed 1/4 inch in height shall be reduced by diamond grinding until they do not exceed 1/8 inch when retested. Such grinding shall be tapered in all directions to provide smooth transitions to areas not requiring grinding. The following will not be permitted: (1) skin patching for correcting low areas, (2) planing or milling for correcting high areas. At the Contractor's option, pavement areas, including ground areas, may be rechecked in order to record a lower Profile Index.

-- End of Section --

SECTION TABLE OF CONTENTS

DIVISION 02 - SITE WORK

SECTION 02821

FENCING

PART 1 GENERAL

1.1 REFERENCES
1.2 SUBMITTALS

PART 2 PRODUCTS

2.1 FENCE FABRIC
2.1.1 Chain Link Fence Fabric
2.2 GATES
2.3 POSTS
2.3.1 Metal Posts for Chain Link Fence
2.4 BRACES AND RAILS
2.5 WIRE
2.5.1 Tension Wire
2.6 ACCESSORIES
2.7 CONCRETE
2.8 PADLOCKS
2.9 REMOVABLE FENCE PANELS

PART 3 EXECUTION

3.1 INSTALLATION
3.2 EXCAVATION
3.3 POST INSTALLATION
3.3.1 Posts for Chain Link Fence
3.4 RAILS
3.4.1 Top Rail
3.4.2 Bottom Rail
3.5 BRACES AND TRUSS RODS
3.6 TENSION WIRES
3.7 CHAIN LINK FABRIC
3.8 GATE INSTALLATION
3.9 GROUNDING

-- End of Section Table of Contents --

SECTION 02821

FENCING

PART 1 GENERAL

1.1 REFERENCES

The publications listed below form a part of this specification to the extent referenced. The publications are referred to in the text by basic designation only.

ASTM INTERNATIONAL (ASTM)

ASTM A 121	(1999) Zinc-Coated (Galvanized) Steel Barbed Wire
ASTM A 153/A 153M	(2001a) Zinc Coating (Hot-Dip) on Iron and Steel Hardware
ASTM A 392	(1996) Zinc-Coated Steel Chain-Link Fence Fabric
ASTM A 491	(1996) Aluminum-Coated Steel Chain-Link Fence Fabric
ASTM A 780	(2001) Repair of Damaged and Uncoated Areas of Hot-Dipped Galvanized Coatings
ASTM A 824	(1995) Metallic-Coated Steel Marcelled Tension Wire for Use With Chain Link Fence
ASTM C 94/C 94M	(2000e2) Ready-Mixed Concrete
ASTM F 626	(1996a) Fence Fittings
ASTM F 883	(1997) Padlocks
ASTM F 900	(1994) Industrial and Commercial Swing Gates
ASTM F 1043	(2000) Strength and Protective Coatings on Metal Industrial Chain-Link Fence Framework
ASTM F 1083	(1997) Specification for Pipe, Steel, Hot-Dipped Zinc-Coated (Galvanized) Welded, for Fence Structures
ASTM F 1184	(1994; R 2000) Industrial and Commercial Horizontal Slide Gates

1.2 SUBMITTALS

Government approval is required for submittals with a "G" designation; submittals not having a "G" designation are for information only. When used, a designation following the "G" designation identifies the office that will review the submittal for the Government. The following shall be submitted in accordance with Section 01330 SUBMITTAL PROCEDURES:

SD-07 Certificates

Chain Link Fence

Statement, signed by an official authorized to certify on behalf of the manufacturer, attesting that the chain link fence and component materials meet the specified requirements.

PART 2 PRODUCTS

2.1 FENCE FABRIC

Fence fabric shall conform to the following:

2.1.1 Chain Link Fence Fabric

ASTM A 392, Class 1, zinc-coated steel wire with minimum coating weight of 1.2 ounces of zinc per square foot of coated surface, or ASTM A 491, Type I, aluminum-coated steel wire. Fabric shall be fabricated of 9 gauge wire woven in 2 inch mesh. Fabric height shall be 6 feet. Fabric shall be twisted and barbed on the top selvage and knuckled on the bottom selvage.

2.2 GATES

ASTM F 900 and/or ASTM F 1184. Gate shall be the type and swing shown. Gate frames shall conform to strength and coating requirements of ASTM F 1083 for Group IA, steel pipe, with external coating Type A, nominal pipe size (NPS) 1-1/2. Gate frames shall conform to strength and coating requirements of ASTM F 1043, for Group IC, steel pipe with external coating Type A or Type B, nominal pipe size (NPS) 1-1/2. Gate frames shall be steel pipe with external coating Type A, a nominal pipe size (NPS) 1-1/2, conforming to ASTM F 1043. Gate fabric shall be as specified for chain link fabric. Gate leaves more than 8 feet wide shall have either intermediate members and diagonal truss rods or shall have tubular members as necessary to provide rigid construction, free from sag or twist. Gate leaves less than 8 feet wide shall have truss rods or intermediate braces. Intermediate braces shall be provided on all gate frames with an electro-mechanical lock. Gate fabric shall be attached to the gate frame by method standard with the manufacturer except that welding will not be permitted. Latches, hinges, stops, keepers, rollers, and other hardware items shall be furnished as required for the operation of the gate. Latches shall be arranged for padlocking so that the padlock will be accessible from both sides of the gate. Stops shall be provided for holding the gates in the open position. For high security applications, each end member of gate frames shall be extended sufficiently above the top

member to carry three strands of barbed wire in horizontal alignment with barbed wire strands on the fence.

2.3 POSTS

2.3.1 Metal Posts for Chain Link Fence

ASTM F 1083, zinc-coated. Group IA, with external coating Type A steel pipe. Group IC steel pipe, zinc-coated with external coating Type A or Type B and Group II , roll-formed steel sections, shall meet the strength and coating requirements of ASTM F 1043. Group III, ASTM F 1043 steel H-section may be used for line posts in lieu of line post shapes specified for the other classes. Sizes shall be as shown on the Drawings. Line posts and terminal (corner, gate, and pull) posts selected shall be of the same designation throughout the fence. Gate post shall be for the gate type specified subject to the limitation specified in ASTM F 900 and/or ASTM F 1184.

2.4 BRACES AND RAILS

ASTM F 1083, zinc-coated, Group IA, steel pipe, size NPS 1-1/4. Group IC steel pipe, zinc-coated, shall meet the strength and coating requirements of ASTM F 1043. Group II, formed steel sections, size 1-21/32 inch, conforming to ASTM F 1043, may be used as braces and rails if Group II line posts are furnished.

2.5 WIRE

2.5.1 Tension Wire

Tension wire shall be Type I or Type II, Class 2 coating, in accordance with ASTM A 824.

2.6 ACCESSORIES

ASTM F 626. Ferrous accessories shall be zinc or aluminum coated. Truss rods shall be furnished for each terminal post. Truss rods shall be provided with turnbuckles or other equivalent provisions for adjustment. Barbed wire shall be 2 strand, 12-1/2 gauge wire, zinc-coated, Class 3 in accordance with ASTM A 121 or aluminum coated Type I in accordance with ASTM A 121. Miscellaneous hardware coatings shall conform to ASTM A 153/A 153M unless modified.

2.7 CONCRETE

ASTM C 94/C 94M, using 3/4 inch maximum size aggregate, and having minimum compressive strength of 3000 psi at 28 days. Grout shall consist of one part portland cement to three parts clean, well-graded sand and the minimum amount of water to produce a workable mix.

2.8 PADLOCKS

Padlocks shall conform to ASTM F 883, Type PO1, Options A, B, and G. EPB, Size 1-3/4 inch. All padlocks shall be keyed alike.

2.9 REMOVABLE FENCE PANELS

Posts for removable fence panels shall be as specified for end, corner, angle, and pull posts. Panel length shall be a maximum of 10 feet and shall be equal division of total length of removable fence section. Frames shall be in accordance ASTM F 1184, Type I.

PART 3 EXECUTION

3.1 INSTALLATION

Fence shall be installed at locations as directed by the Contracting Officer. The area on either side of the fence line shall be cleared a minimum of 5 feet either side. Line posts shall be spaced equidistant at intervals not exceeding 10 feet. Terminal (corner, gate, and pull) posts shall be set at abrupt changes in vertical and horizontal alignment. Fabric shall be continuous between terminal posts; however, runs between terminal posts shall not exceed 500 feet. Any damage to galvanized surfaces, including welding, shall be repaired with paint containing zinc dust in accordance with ASTM A 780.

3.2 EXCAVATION

Post holes shall be cleared of loose material. Waste material shall be spread where directed. The ground surface irregularities along the fence line shall be eliminated to the extent necessary to maintain a 1 inch clearance between the bottom of the fabric and finish grade.

3.3 POST INSTALLATION

3.3.1 Posts for Chain Link Fence

Posts shall be set plumb and in alignment. Posts shall be set in concrete to the depth indicated on the Drawings. Posts set in concrete shall be set in holes not less than the diameter shown on the Drawings. Concrete shall be thoroughly consolidated around each post, shall be free of voids and finished to form a dome. Concrete shall be allowed to cure for 72 hours prior to attachment of any item to the posts. Group II line posts may be mechanically driven, for temporary fence construction. Driven posts shall be set to a minimum depth of 3 feet and shall be protected with drive caps when being set.

3.4 RAILS

3.4.1 Top Rail

Top rail shall be supported at each post to form a continuous brace between terminal posts. Where required, sections of top rail shall be joined using sleeves or couplings that will allow expansion or contraction of the rail.

3.4.2 Bottom Rail

The bottom rail shall be bolted to double rail ends and double rail ends

shall be securely fastened to the posts. Bolts shall be peened to prevent easy removal. Bottom rail shall be installed before chain link fabric.

3.5 BRACES AND TRUSS RODS

Braces and truss rods shall be installed as indicated and in conformance with the standard practice for the fence furnished. Horizontal (compression) braces and diagonal truss (tension) rods shall be installed on fences over 6 feet in height. A center brace or 2 diagonal truss rods shall be installed on 12 foot fences. Braces and truss rods shall extend from terminal posts to line posts. Diagonal braces shall form an angle of approximately 40 to 50 degrees with the horizontal. No bracing is required on fences 6 feet high or less if a top rail is installed.

3.6 TENSION WIRES

Tension wires shall be installed along the top and bottom of the fence line and attached to the terminal posts of each stretch of the fence. Top tension wires shall be installed within the top 1 foot of the installed fabric. Bottom tension wire shall be installed within the bottom 6 inches of the installed fabric. Tension wire shall be pulled taut and shall be free of sag.

3.7 CHAIN LINK FABRIC

Chain link fabric shall be installed on the side of the post indicated. Fabric shall be attached to terminal posts with stretcher bars and tension bands. Bands shall be spaced at approximately 15 inch intervals. The fabric shall be installed and pulled taut to provide a smooth and uniform appearance free from sag, without permanently distorting the fabric diamond or reducing the fabric height. Fabric shall be fastened to line posts at approximately 15 inch intervals and fastened to all rails and tension wires at approximately 24 inch intervals. Fabric shall be cut by untwisting and removing pickets. Splicing shall be accomplished by weaving a single picket into the ends of the rolls to be joined. The bottom of the installed fabric shall be 1 plus or minus 1/2 inch above the ground.

3.8 GATE INSTALLATION

Gates shall be installed at the locations as directed by the Contracting Officer. Hinged gates shall be mounted to swing as directed. Latches, stops, and keepers shall be installed as required. Lift gates shall be installed as recommended by the manufacturer. Padlocks shall be attached to gates or gate posts with chains. Hinge pins, and hardware shall be welded or otherwise secured to prevent removal.

3.9 GROUNDING

Fences crossed by overhead powerlines in excess of 600 volts shall be grounded as specified in Section 16450, GROUNDING. Fences shall be grounded on each side of all gates, at each corner, at the closest approach to each building located within 50 feet of the fence, and where the fence alignment changes more than 15 degrees. Grounding locations shall not exceed 650 feet. Each gate panel shall be bonded with a flexible bond

strap to its gate post. Fences crossed by powerlines of 600 volts or more shall be grounded at or near the point of crossing and at distances not exceeding 150 feet on each side of crossing. Ground conductor shall consist of No. 8 AWG solid copper wire. Grounding electrodes shall be 3/4 inch by 10 foot long copper-clad steel rod. Electrodes shall be driven into the earth so that the top of the electrode is at least 6 inches below the grade. Where driving is impracticable, electrodes shall be buried a minimum of 12 inches deep and radially from the fence. The top of the electrode shall be not less than 2 feet or more than 8 feet from the fence. Ground conductor shall be clamped to the fence and electrodes with bronze grounding clamps to create electrical continuity between fence posts, fence fabric, and ground rods. After installation the total resistance of fence to ground shall not be greater than 25 ohms.

-- End of Section --

SECTION TABLE OF CONTENTS

DIVISION 03 - CONCRETE

SECTION 03101

FORMWORK FOR CONCRETE

PART 1 GENERAL

1.1 REFERENCES
1.2 DESIGN REQUIREMENTS
1.3 SUBMITTALS
1.4 SHOP DRAWINGS

PART 2 PRODUCTS

2.1 MATERIALS
2.1.1 Forms and Form Liners
2.1.1.1 Class "A" Finish
2.1.1.2 Class "B" Finish
2.1.1.3 Class "D" Finish
2.1.2 Form Coating

PART 3 EXECUTION

3.1 INSTALLATION
3.1.1 Form Construction
3.1.2 Chamfering
3.1.3 Coating
3.2 FORM REMOVAL
3.2.1 Formwork Not Supporting Weight of Concrete
3.3 INSPECTION

-- End of Section Table of Contents --

SECTION 03101

FORMWORK FOR CONCRETE

PART 1 GENERAL

1.1 REFERENCES

The publications listed below form a part of this specification to the extent referenced. The publications are referred to in the text by basic designation only.

ACI INTERNATIONAL (ACI)

ACI 347R	(2001) Guide to Formwork for Concrete

ASTM INTERNATIONAL (ASTM)

ASTM C 31/C 31M	(2000e1) Making and Curing Concrete Test Specimens in the Field
ASTM C 39/C 39M	(2001) Compressive Strength of Cylindrical Concrete Specimens
ASTM C 1077	(2002) Laboratories Testing Concrete and Concrete Aggregates for Use in Construction and Criteria for Laboratory Evaluation

U.S. DEPARTMENT OF COMMERCE (DOC)

PS 1	(1995) Construction and Industrial Plywood

1.2 DESIGN REQUIREMENTS

The design, engineering, and construction of the formwork shall be the responsibility of the Contractor. The formwork shall be designed for anticipated live and dead loads and shall comply with the tolerances specified in Section 03200, CONCRETE REINFORCEMENT, 03307, CONCRETE FOR MINOR STRUCTURES, paragraph CONSTRUCTION TOLERANCES. However, for surfaces with an ACI Class A surface designation, the allowable deflection for facing material between studs, for studs between walers and walers between bracing shall be limited to 0.0025 times the span. The formwork shall be designed as a complete system with consideration given to the effects of cementitious materials and mixture additives such as fly ash, cement type, plasticizers, accelerators, retarders, air entrainment, and others. The adequacy of formwork design and construction shall be monitored prior to and during concrete placement as part of the Contractor's approved Quality Control Plan.

1.3 SUBMITTALS

Government approval is required for submittals with a "G" designation; submittals not having a "G" designation are for information only. When used, a designation following the "G" designation identifies the office that will review the submittal for the Government. The following shall be submitted in accordance with Section 01330, SUBMITTAL PROCEDURES:

SD-02 Shop Drawings

Shop Drawings; G, RE

Drawings and design computations for all formwork required shall be submitted at least ten days either before fabrication on site or before delivery of prefabricated forms. If reshoring is permitted, the method, including location, order, and time of erection and removal shall also be submitted for review.

SD-03 Product Data

Materials; G, RE

Manufacturer's literature shall be submitted for plywood, concrete form hard board, form accessories, prefabricated forms, form coating.

SD-06 Test Reports

Inspection; G, RE

The Contractor shall submit field inspection reports for concrete forms and embedded items.

Formwork Not Supporting Weight of Concrete; G, RE.

If forms are to be removed in less than 24 hours on formwork not supporting the weight of concrete, the evaluation and results of the control cylinder tests shall be submitted to and approved before the forms are removed.

1.4 SHOP DRAWINGS

The shop Drawings and data submitted shall include the type, size, quantity, and strength of all materials of which the forms are made, the plan for jointing of facing panels, details affecting the appearance, and the assumed design values and loading conditions.

PART 2 PRODUCTS

2.1 MATERIALS

2.1.1 Forms and Form Liners

Forms and form liners shall be fabricated with facing materials that will produce a finish meeting the specified irregularities in formed surface

requirements as defined in ACI 347R. Forms and form liners shall be fabricated with facing materials as specified below.

2.1.1.1 Class "A" Finish

This class of finish shall apply to cast-in-place columns and site bollards. The form shall be a fibre form, spirally wound of laminated paper product with a poly-ethylene coated interior in sizes as indicated on the Drawings.

2.1.1.2 Class "B" Finish

This class of finish shall apply to all surfaces except those specified to receive Class A or Class D. The form facing material shall be composed of tongue-and-groove or shiplap lumber, plywood conforming to PS 1, Grade B-B concrete form, tempered concrete form hard board or steel. Steel lining on wood sheathing will not be permitted.

2.1.1.3 Class "D" Finish

This class of finish shall apply to footings and foundation stem walls. The form facing may be of wood or steel.

2.1.2 Form Coating

Form coating shall be commercial formulation that will not bond with, stain, cause deterioration, or any other damage to concrete surfaces. The coating shall not impair subsequent treatment of concrete surfaces depending upon bond or adhesion nor impede the wetting of surfaces to be cured with water or curing compounds. If special form liners are to be used, the Contractor shall follow the recommendation of the form coating manufacturer.

PART 3 EXECUTION

3.1 INSTALLATION

3.1.1 Form Construction

Forms shall be constructed true to the structural design and required alignment. The form surface and joints shall be mortar tight and supported to achieve safe performance during construction, concrete placement, and form removal. The Contractor shall continuously monitor the alignment and stability of the forms during all phases to assure the finished product will meet the required surface class specified in paragraph FORMS AND FORM LINERS and tolerances specified in paragraph DESIGN REQUIREMENTS. Failure of any supporting surface either due to surface texture, deflection or form collapse shall be the responsibility of the Contractor as will the replacement or correction of unsatisfactory surfaces. When forms for continuous surfaces are placed in successive units, care shall be taken to fit the forms over the completed surface to obtain accurate alignment of the surface and to prevent leakage of mortar. Forms shall not be re-used if there is any evidence of defects which would impair the quality of the resulting concrete surface. All surfaces of used forms shall be cleaned of

mortar and any other foreign material before reuse.

3.1.2 Chamfering

All exposed joints, edges and external corners shall be chamfered by molding placed in the forms unless the Drawings specifically state that chamfering is to be omitted or as otherwise specified. Chamfered joints shall not be permitted where earth or rockfill is placed in contact with concrete surfaces. Chamfered joints shall be terminated twelve inches outside the limit of the earth or rockfill so that the end of the chamfers will be clearly visible.

3.1.3 Coating

Forms for exposed or painted surfaces shall be coated with form oil or a form-release agent before the form or reinforcement is placed in final position. The coating shall be used as recommended in the manufacturer's instructions. Forms for unexposed surfaces may be wet with water in lieu of coating immediately before placing concrete, except that, in cold weather when freezing temperatures are anticipated, coating shall be mandatory. Surplus coating on form surfaces and coating on reinforcing steel and construction joints shall be removed before placing concrete.

3.2 FORM REMOVAL

Forms shall not be removed without approval. The minimal time required for concrete to reach a strength adequate for removal of formwork without risking the safety of workers or the quality of the concrete depends on a number of factors including, but not limited to, ambient temperature, concrete lift heights, type and amount of concrete admixture, and type and amount of cementitious material in the concrete. It is the responsibility of the Contractor to consider all applicable factors and leave the forms in place until it is safe to remove them. In any case forms shall not be removed unless the minimum time and minimum compressive strength requirements below are met, except as otherwise directed or specifically authorized. When conditions are such as to justify the requirement, forms will be required to remain in place for a longer period. All removal shall be accomplished in a manner which will prevent damage to the concrete and ensure the complete safety of the structure. Where forms support more than one element, the forms shall not be removed until the form removal criteria are met by all supported elements. Form removal shall be scheduled so that all necessary repairs can be performed. Fins, ravelings, and loose material shall be removed, all surface defects over 1/2 inch in diameter or more than 1/2 inch deep, shall be repaired and, holes left by removal of form ties shall be reamed and filled. Metal tools shall not be used to finish repairs in Class A surfaces. Evidence that concrete has gained sufficient strength to permit removal of forms shall be determined by tests on control cylinders. All control cylinders shall be stored in the structure or as near the structure as possible so they receive the same curing conditions and protection methods as given those portions of the structure they represent. Control cylinders shall be removed from the molds at an age of no more than 24 hours. All control cylinders shall be prepared and tested in accordance with ASTM C 31/C 31M and ASTM C 39/C 39M at the expense of the Contractor by an independent laboratory that complies

with ASTM C 1077 and shall be tested within 4 hours after removal from the site.

3.2.1 Formwork Not Supporting Weight of Concrete

Formwork for walls, columns, sides of beams, gravity structures, and other vertical type formwork not supporting the weight of concrete shall not be removed in less than 24 hours after concrete placement is completed. Form removal before 24 hours will be allowed for simple floor slab, sidewalks, and driveways provided the ambient temperature during this period has not fallen below 50 degrees F at any time since placement and evidence from compressive tests on field-cured concrete control cylinders indicates that the concrete has attained a compressive strength of at least 3500 psi. Control cylinders shall be prepared for each set of forms to be removed before 24 hours. The stability of the concrete shall be evaluated by a structural engineer prior to removal of the forms.

3.3 INSPECTION

Forms and embedded items shall be inspected in sufficient time prior to each concrete placement by the Contractor in order to certify to the Contracting Officer that they are ready to receive concrete. The results of each inspection shall be reported in writing.

-- End of Section --

SECTION TABLE OF CONTENTS

DIVISION 03 - CONCRETE

SECTION 03150

EXPANSION JOINTS, CONTRACTION JOINTS, AND WATERSTOPS

PART 1 GENERAL

1.1 REFERENCES
1.2 SUBMITTALS
1.3 DELIVERY AND STORAGE

PART 2 PRODUCTS

2.1 CONTRACTION JOINT STRIPS
2.2 PREFORMED EXPANSION JOINT FILLER
2.3 PLASTIC WATER STOP
2.4 SEALANT
2.4.1 Preformed Polychloroprene Elastomeric Type
2.4.2 Lubricant for Preformed Compression Seals
2.4.3 Hot-Poured Type
2.4.4 Field-Molded Type

PART 3 EXECUTION

3.1 JOINTS
3.1.1 Contraction Joints
3.1.1.1 Sawed Joints
3.1.2 Expansion Joints
3.1.3 Joint Sealant
3.2 CONSTRUCTION JOINTS

-- End of Section Table of Contents --

SECTION 03150

EXPANSION JOINTS, CONTRACTION JOINTS, AND WATERSTOPS

PART 1 GENERAL

1.1 REFERENCES

The publications listed below form a part of this specification to the extent referenced. The publications are referred to in the text by basic designation only.

AMERICAN HARDBOARD ASSOCIATION (AHA)

AHA A135.4	(1995) Basic Hardboard

ASTM INTERNATIONAL (ASTM)

ASTM C 920	(2002) Elastomeric Joint Sealants
ASTM D 1190	(1997) Concrete Joint Sealer, Hot-Applied Elastic Type
ASTM D 1191	(1984; R 1994el) Concrete Joint Sealers
ASTM D 1751	(1999) Preformed Expansion Joint Filler for Concrete Paving and Structural Construction (Nonextruding and Resilient Bituminous Types)
ASTM D 1752	(1984; R 1996el) Preformed Sponge Rubber and Cork Expansion Joint Fillers for Concrete Paving and Structural Construction
ASTM D 2628	(1991; R 1998) Preformed Polychloroprene Elastomeric Joint Seals for Concrete Pavements
ASTM D 2835	(1989; R 1998) Lubricant for Installation of Preformed Compression Seals in Concrete Pavements
ASTM D 5249	(1995) Backer Material for Use With Cold and Hot-Applied Joint Sealants in Portland-Cement Concrete and Asphalt Joints

U.S. ARMY CORPS OF ENGINEERS (USACE)

COE CRD-C 572	(1974) Corps of Engineers Specifications for Polyvinylchloride Waterstops

1.2 SUBMITTALS

Government approval is required for submittals with a "G" designation; submittals not having a "G" designation are for information only. When used, a designation following the "G" designation identifies the office that will review the submittal for the Government. The following shall be submitted in accordance with Section 01330 SUBMITTAL PROCEDURES:

SD-03 Product Data

Preformed Expansion Joint Filler

Sealant

Manufacturer's literature, including safety data sheets, for preformed fillers and the lubricants used in their installation; field-molded sealants and primers (when required by sealant manufacturer); preformed compression seals; and waterstops.

Manufacturer's recommended instructions for installing preformed fillers, field-molded sealants; preformed compression seals; and waterstops; and for splicing non-metallic waterstops.

SD-04 Samples

SD-07 Certificates

Preformed Expansion Joint Filler

Sealant

Water Stop

Certificates of compliance stating that the joint filler and sealant materials and waterstops conform to the requirements specified.

1.3 DELIVERY AND STORAGE

Material delivered and placed in storage shall be stored off the ground and protected from moisture, dirt, and other contaminants. Sealants shall be delivered in the manufacturer's original unopened containers. Sealants whose shelf life has expired shall be removed from the site.

PART 2 PRODUCTS

2.1 CONTRACTION JOINT STRIPS

Contraction joint strips shall be 1/8 inch thick tempered hardboard conforming to AHA A135.4, Class 1. In lieu of hardboard strips, rigid polyvinylchloride (PVC) or high impact polystyrene (HIPS) insert strips specifically designed to induce controlled cracking in slabs on grade may be used. Such insert strips shall have removable top section.

2.2 PREFORMED EXPANSION JOINT FILLER

Expansion joint filler shall be preformed material conforming to ASTM D 1751 or ASTM D 1752. Unless otherwise indicated, filler material shall be 3/8 inch thick and of a width applicable for the joint formed. Backer material, when required, shall conform to ASTM D 5249.

2.3 PLASTIC WATER STOP

a. Extruded from elastomeric plastic compound of which basic resin shall be prime virgin polyvinyl chloride (PVC). Compound shall not contain scrapped material, reclaimed material, or pigment.

b. Specific gravity: Approximately 1.37

c. Shore Durometer Type A Hardness: Approximately 80.

d. Performance Requirements: COE CRD-C 572.

e. Type: Center bulb with parallel ribs or protrusions on each side of strip center.

f. Corrugated or tapered type water stops are not acceptable.

g. Thickness: Constant from bulb edge to outside stop edge.

h. Minimum Weight per Foot of Water Stop:

1. 1.60 pounds for 3/8 inch by 6 inch.
2. 2.30 pounds for 3/8 inch by 9 inch.

2.4 SEALANT

Joint sealant shall conform to the following:

2.4.1 Preformed Polychloroprene Elastomeric Type

ASTM D 2628.

2.4.2 Lubricant for Preformed Compression Seals

ASTM D 2835.

2.4.3 Hot-Poured Type

ASTM D 1190 tested in accordance with ASTM D 1191.

2.4.4 Field-Molded Type

ASTM C 920, Type M for horizontal joints or Type NS for vertical joints, Class 25, and Use NT. Bond breaker material shall be polyethylene tape, coated paper, metal foil or similar type materials. The back-up material shall be compressible, non-shrink, nonreactive with sealant, and

non-absorptive material type such as extruded butyl or polychloroprene rubber.

PART 3 EXECUTION

3.1 JOINTS

Joints shall be installed at locations indicated and as authorized.

3.1.1 Contraction Joints

Contraction joints may be constructed by inserting tempered hardboard strips or rigid PVC or HIPS insert strips into the plastic concrete using a steel parting bar, when necessary, or by cutting the concrete with a saw after concrete has set. Joints shall be approximately 1/8 inch wide and shall extend into the slab one-fourth the slab thickness, minimum, but not less than 1 inch.

3.1.1.1 Sawed Joints

Joint sawing shall be early enough to prevent uncontrolled cracking in the slab, but late enough that this can be accomplished without appreciable spalling. Concrete sawing machines shall be adequate in number and power, and with sufficient replacement blades to complete the sawing at the required rate. Joints shall be cut to true alignment and shall be cut in sequence of concrete placement. Sludge and cutting debris shall be removed.

3.1.2 Expansion Joints

Preformed expansion joint filler shall be used in expansion and isolation joints in slabs around columns and between slabs on grade and vertical surfaces where indicated. The filler shall extend the full slab depth, unless otherwise indicated. The edges of the joint shall be neatly finished with an edging tool of 1/8 inch radius, except where a resilient floor surface will be applied. Where the joint is to receive a sealant, the filler strips shall be installed at the proper level below the finished floor with a slightly tapered, dressed and oiled wood strip temporarily secured to the top to form a recess to the size shown on the Drawings. The wood strip shall be removed after the concrete has set. Contractor may opt to use a removable expansion filler cap designed and fabricated for this purpose in lieu of the wood strip. The groove shall be thoroughly cleaned of laitance, curing compound, foreign materials, protrusions of hardened concrete, and any dust which shall be blown out of the groove with oil-free compressed air.

3.1.3 Joint Sealant

Sawed contraction joints and expansion joints in slabs shall be filled with joint sealant, unless otherwise shown. Joint surfaces shall be clean, dry, and free of oil or other foreign material which would adversely affect the bond between sealant and concrete. Joint sealant shall be applied as recommended by the manufacturer of the sealant.

3.2 CONSTRUCTION JOINTS

Construction joints are specified in Section 03307 CONCRETE FOR MINOR STRUCTURES except that construction joints coinciding with expansion and contraction joints shall be treated as expansion or contraction joints as applicable.

-- End of Section --

SECTION TABLE OF CONTENTS

DIVISION 03 - CONCRETE

SECTION 03200

CONCRETE REINFORCEMENT

PART 1 GENERAL

1.1 REFERENCES
1.2 SUBMITTALS
1.3 DELIVERY AND STORAGE

PART 2 PRODUCTS

2.1 REINFORCING STEEL
2.2 WIRE TIES
2.3 SUPPORTS

PART 3 EXECUTION

3.1 REINFORCEMENT
3.1.1 Placement
3.1.2 Splicing
3.1.3 Concrete Reinforcement
3.1.4 Masonry Reinforcement

-- End of Section Table of Contents --

SECTION 03200

CONCRETE REINFORCEMENT

PART 1 GENERAL

1.1 REFERENCES

The publications listed below form a part of this specification to the extent referenced. The publications are referred to in the text by basic designation only.

ACI INTERNATIONAL (ACI)

ACI 318/318R	(1999) Building Code Requirements for Structural Concrete and Commentary

ASTM INTERNATIONAL (ASTM)

ASTM A 615/A 615M	(2001b) Deformed and Plain Billet-Steel Bars for Concrete Reinforcement

AMERICAN WELDING SOCIETY (AWS)

AWS D1.4	(1998) Structural Welding Code - Reinforcing Steel

CONCRETE REINFORCING STEEL INSTITUTE (CRSI)

CRSI MSP-1	(2001) Manual of Standard Practice

1.2 SUBMITTALS

Government approval is required for submittals with a "G" designation; submittals not having a "G" designation are for information only. When used, a designation following the "G" designation identifies the office that will review the submittal for the Government. The following shall be submitted in accordance with Section 01330, SUBMITTAL PROCEDURES:

SD-02 Shop Drawings

Reinforcement; G, RE

Detail Drawings showing reinforcing steel placement, schedules, sizes, grades, and splicing and bending details. Drawings shall show support details including types, sizes and spacing.

SD-03 Product Data

Welding; G, RE

A list of qualified welders names.

SD-07 Certificates

Reinforcing Steel; G, RE

Certified copies of mill reports attesting that the reinforcing steel furnished contains no less than 25 percent recycled scrap steel and meets the requirements specified herein, prior to the installation of reinforcing steel.

1.3 DELIVERY AND STORAGE

Reinforcement and accessories shall be stored off the ground on platforms, skids, or other supports.

PART 2 PRODUCTS

2.1 REINFORCING STEEL

Reinforcing steel shall be deformed bars conforming to ASTM A 615/A 615M, grades and sizes as indicated.

2.2 WIRE TIES

Wire ties shall be 16 gauge or heavier black annealed steel wire.

2.3 SUPPORTS

Bar supports for formed surfaces shall be designed and fabricated in accordance with CRSI MSP-1 and shall be steel or precast concrete blocks. Precast concrete blocks shall have wire ties and shall be not less than 4 inches square when supporting reinforcement on ground. Precast concrete block shall have compressive strength equal to that of the surrounding concrete. Where concrete formed surfaces will be exposed to weather or where surfaces are to be painted, steel supports within 1/2 inch of concrete surface shall be galvanized, plastic protected or of stainless steel. Concrete supports used in concrete exposed to view shall have the same color and texture as the finish surface. For slabs on grade, supports shall be precast concrete blocks, plastic coated steel fabricated with bearing plates, or specifically designed wire-fabric supports fabricated of plastic.

PART 3 EXECUTION

3.1 REINFORCEMENT

Reinforcement shall be fabricated to shapes and dimensions shown and shall conform to the requirements of ACI 318/318R. Reinforcement shall be cold bent unless otherwise authorized. Bending may be accomplished in the field or at the mill. Bars shall not be bent after embedment in concrete. Safety caps shall be placed on all exposed ends of vertical concrete reinforcement bars that pose a danger to life safety. Wire tie ends shall

face away from the forms.

3.1.1 Placement

Reinforcement shall be free from loose rust and scale, dirt, oil, or other deleterious coating that could reduce bond with the concrete. Reinforcement shall be placed in accordance with ACI 318/318R at locations shown plus or minus one bar diameter. Reinforcement shall not be continuous through expansion joints and shall be as indicated through construction or contraction joints. Concrete coverage shall be as indicated or as required by ACI 318/318R. If bars are moved more than one bar diameter to avoid interference with other reinforcement, conduits or embedded items, the resulting arrangement of bars, including additional bars required to meet structural requirements, shall be approved before concrete is placed.

3.1.2 Splicing

Splices of reinforcement shall conform to ACI 318/318R and shall be made only as required or indicated. Splicing shall be by lapping or by mechanical or welded butt connection; except that lap splices shall not be used for bars larger than No. 11 unless otherwise indicated. Welding shall conform to AWS D1.4. Welded butt splices shall be full penetration butt welds. Lapped bars shall be placed in contact and securely tied or spaced transversely apart to permit the embedment of the entire surface of each bar in concrete. Lapped bars shall not be spaced farther apart than one-fifth the required length of lap or 6 inches. Mechanical butt splices shall be in accordance with the recommendation of the manufacturer of the mechanical splicing device. Butt splices shall develop 125 percent of the specified minimum yield tensile strength of the spliced bars or of the smaller bar in transition splices. Bars shall be flame dried before butt splicing. Adequate jigs and clamps or other devices shall be provided to support, align, and hold the longitudinal centerline of the bars to be butt spliced in a straight line.

3.1.3 Concrete Reinforcement

a. The minimum reinforcing for all concrete walls and slabs shall be as follows:

WALL THICKNESS	REINF EACH WAY	LOCATION
6 inches	#4@12 inches	Centered
8 inches	#5@12 inches	Centered
10 inches	#6@12 inches	Each Face
12 inches	#7@12 inches	Each Face

Provide larger sizes and more reinforcing in all sections of concrete where required by the details on the Drawings or by these Specifications.

b. Clearance for the reinforcement bars, unless shown otherwise shall be:

1. When placed on ground: 3 inches.
2. All other concrete surfaces:
   (a) #5 Bar or smaller: 1-1/2 inches.
   (b) #6 Bar or larger: 2 inches.

c. All bends, unless otherwise shown, shall be a 90 degree standard hook as defined in latest edition of ACI 318/318R.

3.1.4 Masonry Reinforcement

The minimum reinforcing for all concrete block walls shall be as follows:

WALL THICKNESS	VERTICAL REINF	HORIZONTAL REING	LOCATION
8 inches	#6@48 inches	#5@48 inches	Centered
12 inches	#6@48 inches	#5@48 inches	Each Face

Provide larger sizes and more reinforcing in all walls where required by the Drawings or by these Specifications.

-- End of Section --

SECTION TABLE OF CONTENTS

DIVISION 03 - CONCRETE

SECTION 03307

CONCRETE FOR MINOR STRUCTURES

PART 1 GENERAL

1.1 REFERENCES
1.2 SUBMITTALS
1.3 DESIGN AND PERFORMANCE REQUIREMENTS
1.3.1 Design Calculations
1.3.2 Strength
1.3.3 Construction Tolerances
1.3.4 Concrete Mixture Proportions

PART 2 PRODUCTS

2.1 MATERIALS
2.1.1 Cementitious Materials
2.1.1.1 Portland Cement
2.1.1.2 Pozzolan
2.1.2 Aggregates
2.1.3 Admixtures
2.1.3.1 Air-Entraining Admixture
2.1.3.2 Water-Reducing or Retarding Admixture
2.1.4 Water
2.1.5 Reinforcing Steel
2.1.6 Expansion Joint Filler Strips, Premolded
2.1.7 Joint Sealants - Field Molded Sealants
2.1.8 Curing Materials
2.1.8.1 Impervious Sheet Materials
2.1.8.2 Membrane-Forming Curing Compound
2.1.9 Waterstops
2.1.9 Plastic Water Stop
2.1.10 Formwork
2.1.11 Precast Wetwells

PART 3 EXECUTION

3.1 PREPARATION
3.1.1 General
3.1.2 Embedded Items
3.1.3 Formwork Installation
3.1.4 Production of Concrete
3.1.4.1 Ready-Mixed Concrete
3.1.5 Concrete Made by Volumetric Batching and Continuous Mixing
3.2 CONVEYING AND PLACING CONCRETE
3.2.1 General

3.2.2 Consolidation
3.2.3 Cold-Weather Requirements
3.2.4 Hot-Weather Requirements
3.3 FINISHING
3.3.1 General
3.3.2 Finishing Formed Surfaces
3.3.3 Finishing Unformed Surfaces
3.3.3.1 Sandblast Finish
3.3.3.2 Broom Finish
3.3.3.3 Expansion and Contraction Joints
3.3.3.4 Installation of Water Stops
3.4 CURING AND PROTECTION
3.5 INSTALLATION OF PRECAST WETWELLS
3.6 TESTS AND INSPECTIONS
3.6.1 General
3.6.2 Inspection Details and Frequency of Testing
3.6.2.1 Preparations for Placing
3.6.2.2 Air Content
3.6.2.3 Slump
3.6.2.4 Consolidation and Protection
3.6.3 Action Required
3.6.3.1 Placing
3.6.3.2 Air Content
3.6.3.3 Slump
3.6.4 Reports

-- End of Section Table of Contents --

SECTION 03307

CONCRETE FOR MINOR STRUCTURES

PART 1 GENERAL

1.1 REFERENCES

The publications listed below form a part of this specification to the extent referenced. The publications are referred to in the text by basic designation only.

ACI INTERNATIONAL (ACI)

ACI 318/318R	(1999) Building Code Requirements for Structural Concrete and Commentary
ACI 347R	(2001) Guide to Formwork for Concrete
ACI 308	(2001) Guide to Curing Concrete

ASTM INTERNATIONAL (ASTM)

ASTM A 185	(2001) Steel Welded Wire Fabric, Plain, for Concrete Reinforcement
ASTM C 31/C 31M	(2000e1) Making and Curing Concrete Test Specimens in the Field
ASTM C 33	(2001a) Concrete Aggregates
ASTM C 39/C 39M	(2001) Compressive Strength of Cylindrical Concrete Specimens
ASTM C 94/C 94M	(2000e2) Ready-Mixed Concrete
ASTM C 143/C 143M	(2000) Slump of Hydraulic Cement Concrete
ASTM C 150	(2002) Portland Cement
ASTM C 171	(1997a) Sheet Materials for Curing Concrete
ASTM C 172	(1999) Sampling Freshly Mixed Concrete
ASTM C 231	(1997el) Air Content of Freshly Mixed Concrete by the Pressure Method
ASTM C 260	(2001) Air-Entraining Admixtures for Concrete

ASTM C 309	(1998a) Liquid Membrane-Forming Compounds for Curing Concrete
ASTM C 494/C 494M	(1999ae1) Chemical Admixtures for Concrete
ASTM C 618	(2001) Coal Fly Ash and Raw or Calcined Natural Pozzolan for Use as a Mineral Admixture in Concrete
ASTM C 685	(2000) Concrete Made by Volumetric Batching and Continuous Mixing
ASTM D 75	(1997) Sampling Aggregates

U.S. ARMY CORPS OF ENGINEERS (USACE)

COE CRD-C 400	(1963) Requirements for Water for Use in Mixing or Curing Concrete
COE CRD-C 572	(1974) Corps of Engineers Specifications for Polyvinylchloride Waterstops

1.2 SUBMITTALS

Government approval is required for submittals with a "G" designation; submittals not having a "G" designation are for information only. When used, a designation following the "G" designation identifies the office that will review the submittal for the Government. The following shall be submitted in accordance with Section 01330 SUBMITTAL PROCEDURES:

SD-03 Product Data

Air-Entraining Admixture; G, RE
Water-Reducing or Retarding Admixture; G, RE
Curing Materials; G, RE
Reinforcing Steel; G, RE
Joint Sealants - Field Molded Sealants; G, RE

Manufacturer's literature is available from suppliers which demonstrates compliance with applicable specifications for the above materials.

Water Stops;G, RE
Precast Wetwells; G, RE
Conveying and Placing Concrete; G, RE

The methods and equipment for transporting, handling, depositing, and consolidating the concrete shall be submitted prior to the first concrete placement.

SD-06 Test Reports

Aggregates

Aggregates will be accepted on the basis of certificates of compliance and test reports that show the material(s) meets the quality and grading requirements of the specifications under which it is furnished.

Concrete Mixture Proportions; G, RE

Ten days prior to placement of concrete, the Contractor shall submit the mixture proportions that will produce concrete of the quality required. Applicable test reports shall be submitted to verify that the concrete mixture proportions selected will produce concrete of the quality specified.

SD-07 Certificates

Cementitious Materials

Certificates of compliance attesting that the concrete materials meet the requirements of the specifications shall be submitted in accordance with the Special Clause "CERTIFICATES OF COMPLIANCE". Cementitious material will be accepted on the basis of a manufacturer's certificate of compliance, accompanied by mill test reports that the material(s) meet the requirements of the specification under which it is furnished.

Aggregates

Aggregates will be accepted on the basis of certificates of compliance and tests reports that show the material(s) meet the quality and grading requirements of the specifications under which it is furnished.

1.3 DESIGN AND PERFORMANCE REQUIREMENTS

The Government will maintain the option to sample and test joint sealer, joint filler material aggregates and concrete to determine compliance with the specifications. The Contractor shall provide facilities and labor as may be necessary to assist the Government in procurement of representative test samples. Samples of aggregates will be obtained at the point of batching in accordance with ASTM D 75. Concrete will be sampled in accordance with ASTM C 172. Slump and air content will be determined in accordance with ASTM C 143/C 143M and ASTM C 231, respectively, when cylinders are molded. Compression test specimens will be made, cured, and transported in accordance with ASTM C 31/C 31M. Compression test specimens will be tested in accordance with ASTM C 39/C 39M. Samples for strength tests will be taken not less than once each shift in which concrete is produced from each class of concrete required. A minimum of three specimens will be made from each sample; two will be tested at 28 days (90 days if pozzolan is used) for acceptance, and one will be tested at 7 days for information.

1.3.1 Design Calculations

Submit calculations reflecting design conforming to requirements of

paragraph entitled "Precast Concrete Member Design." Design calculations and Drawings of precast members (including connections) shall be prepared and sealed by a registered professional engineer, and submitted for approval prior to fabrication.

1.3.2 Strength

Acceptance test results will be the average strengths of two specimens tested at 28 days (90 days if pozzolan is used). The strength of the concrete will be considered satisfactory so long as the average of three consecutive acceptance test results equal or exceed the specified compressive strength, f'c, and no individual acceptance test result falls below f'c by more than 500 psi.

1.3.3 Construction Tolerances

A Class "C" finish shall apply to all surfaces except those specified to receive a Class "D" finish. A Class "D" finish shall apply to all surfaces which will be permanently concealed after construction. The surface requirements for the classes of finish required shall be as specified in ACI 347R.

1.3.4 Concrete Mixture Proportions

Concrete mixture proportions shall be the responsibility of the Contractor. Mixture proportions shall include the dry weights of cementitious material(s); the nominal maximum size of the coarse aggregate; the specific gravities, absorptions, and saturated surface-dry weights of fine and coarse aggregates; the quantities, types, and names of admixtures; and quantity of water per cubic yard of concrete. All materials included in the mixture proportions shall be of the same type and from the same source as will be used on the project. Specified compressive strength f'c shall be 4,000 psi at 28 days (90 days if pozzolan is used). The maximum nominal size coarse aggregate shall be 1-1/2 inch, in accordance with ACI 318/318R. The air content shall be between 4.5 and 7.5 percent. The slump shall be between 2 and 5 inches. The maximum water cement ratio shall be 0.42.

PART 2 PRODUCTS

2.1 MATERIALS

2.1.1 Cementitious Materials

Cementitious materials shall conform to the appropriate specifications listed:

2.1.1.1 Portland Cement

ASTM C 150, Type II, low alkali.

2.1.1.2 Pozzolan

Pozzolan shall conform to ASTM C 618, Class C or F, including requirements of Tables 1A and 2A.

2.1.2 Aggregates

Aggregates shall meet the quality and grading requirements of ASTM C 33 Class Designations 4M or better. Aggregates shall be non potentially reactive in accordance with ASTM C 33, Appendix XI, Paragraph XI.1.

2.1.3 Admixtures

Admixtures to be used, when required or approved, shall comply with the appropriate specification listed. Chemical admixtures that have been in storage at the project site for longer than 6 months or that have been subjected to freezing shall be retested at the expense of the Contractor at the request of the Contracting Officer and shall be rejected if test results are not satisfactory.

2.1.3.1 Air-Entraining Admixture

Air-entraining admixture shall meet the requirements of ASTM C 260.

2.1.3.2 Water-Reducing or Retarding Admixture

Water-reducing or retarding admixture shall meet the requirements of ASTM C 494/C 494M, Type A, B, or D.

2.1.4 Water

Water for mixing and curing shall be fresh, clean, potable, and free from injurious amounts of oil, acid, salt, or alkali, except that unpotable water may be used if it meets the requirements of COE CRD-C 400.

2.1.5 Reinforcing Steel

Reinforcing steel bar shall be as specified in Section 03200, CONCRETE REINFORCEMENT. Welded steel wire fabric shall conform to the requirements of ASTM A 185. Details of reinforcement not shown shall be in accordance with ACI 318/318R, Chapters 7 and 12. Welded fabric shall be flat sheets only.

2.1.6 Expansion Joint Filler Strips, Premolded

Expansion joint filler strips, premolded shall be as specified in Section 03150, EXPANSION JOINTS, CONTRACTION JOINTS, AND WATERSTOPS

2.1.7 Joint Sealants - Field Molded Sealants

Joint sealants as specified in Section 07920, JOINT SEALANTS.

2.1.8 Curing Materials

Curing materials shall conform to the following requirements.

2.1.8.1 Impervious Sheet Materials

Impervious sheet materials, ASTM C 171, type optional, except polyethylene film, if used, shall be white opaque.

2.1.8.2 Membrane-Forming Curing Compound

ASTM C 309, Type 1-D or 2, Class A .

2.1.9 Waterstops

Waterstops shall conform to COE CRD-C 572.

2.1.9 Plastic Water Stop

As specified in Section 03150, EXPANSION JOINTS, CONTRACTION JOINTS, AND WATERSTOPS

2.1.10 Formwork

All forming and shoring shall be as specified in Section 03101, FORMWORK FOR CONCRETE.

2.1.11 Precast Wetwells

As specified in Section 03410, PRECAST WETWELLS.

PART 3 EXECUTION

3.1 PREPARATION

3.1.1 General

Construction joints shall be prepared to expose coarse aggregate, and the surface shall be clean, damp, and free of laitance. Ramps and walkways, as necessary, shall be constructed to allow safe and expeditious access for concrete and workmen. Snow, ice, standing or flowing water, loose particles, debris, and foreign matter shall have been removed. Earth foundations shall be satisfactorily compacted. Spare vibrators shall be available. The entire preparation shall be accepted by the Government prior to placing.

3.1.2 Embedded Items

Reinforcement shall be secured in place; joints, anchors, and other embedded items shall have been positioned. Internal ties shall be arranged so that when the forms are removed the metal part of the tie will be not less than 2 inches from concrete surfaces permanently exposed to view or exposed to water on the finished structures. Embedded items shall be free of oil and other foreign matters such as loose coatings or rust, paint, and scale. The embedding of wood in concrete will be permitted only when specifically authorized or directed. All equipment needed to place, consolidate, protect, and cure the concrete shall be at the placement site and in good operating condition.

Reinforcement Around Openings: On each side and above and below pipe or

opening, place an equivalent area of steel bars to replace steel bars cut for opening. Extend steel reinforcing a standard lap length beyond opening at each end.

3.1.3 Formwork Installation

Forms shall be properly aligned, adequately supported, and mortar-tight. The form surfaces shall be smooth and free from irregularities, dents, sags, or holes when used for permanently exposed faces. All exposed joints and edges shall be chamfered, unless otherwise indicated.

3.1.4 Production of Concrete

3.1.4.1 Ready-Mixed Concrete

Ready-mixed concrete shall conform to ASTM C 94/C 94M except as otherwise specified.

3.1.5 Concrete Made by Volumetric Batching and Continuous Mixing

Concrete made by volumetric batching and continuous mixing shall conform to ASTM C 685.

3.2 CONVEYING AND PLACING CONCRETE

Conveying and placing concrete shall conform to the following requirements.

3.2.1 General

Concrete placement shall not be permitted when weather conditions prevent proper placement and consolidation without approval. When concrete is mixed and/or transported by a truck mixer, the concrete shall be delivered to the site of the work and discharge shall be completed within 1-1/2 hours or 45 minutes when the placing temperature is 85 degrees F or greater unless a retarding admixture is used. Concrete shall be conveyed from the mixer to the forms as rapidly as practicable by methods which prevent segregation or loss of ingredients. Concrete shall be in place and consolidated within 15 minutes after discharge from the mixer. Concrete shall be deposited as close as possible to its final position in the forms and be so regulated that it may be effectively consolidated in horizontal layers 18 inches or less in thickness with a minimum of lateral movement. The placement shall be carried on at such a rate that the formation of cold joints will be prevented.

3.2.2 Consolidation

Each layer of concrete shall be consolidated by rodding, spading, or internal vibrating equipment. External vibrating equipment may be used when authorized. Internal vibration shall be systematically accomplished by inserting the vibrator through the fresh concrete in the layer below at a uniform spacing over the entire area of placement. The distance between insertions shall be approximately 1.5 times the radius of action of the vibrator and overlay the adjacent, just-vibrated area by a few inches. The vibrator shall penetrate rapidly to the bottom of the layer and at least 6

inches into the layer below, if such a layer exists. It shall be held stationary until the concrete is consolidated and then withdrawn slowly at the rate of about 3 inches per second.

3.2.3 Cold-Weather Requirements

No concrete placement shall be made when the ambient temperature is below 35 degrees F or if the ambient temperature is below 40 degrees F and falling. Suitable covering and other means as approved shall be provided for maintaining the concrete at a temperature of at least 50 degrees F for not less than 72 hours after placing and at a temperature above freezing for the remainder of the curing period. Salt, chemicals, or other foreign materials shall not be mixed with the concrete to prevent freezing. Any concrete damaged by freezing shall be removed and replaced at the expense of the Contractor.

3.2.4 Hot-Weather Requirements

When the rate of evaporation of surface moisture, as determined by use of Figure 1 of ACI 308, is expected to exceed 0.2 pound per square foot per hour, provisions for windbreaks, shading, fog spraying, or covering with a light-colored material shall be made in advance of placement, and such protective measures shall be taken as quickly as finishing operations will allow.

3.3 FINISHING

3.3.1 General

No finishing or repair will be done when either the concrete or the ambient temperature is below 50 degrees F.

3.3.2 Finishing Formed Surfaces

All fins and loose materials shall be removed, and surface defects including tie holes shall be filled. All honeycomb areas and other defects shall be repaired. All unsound concrete shall be removed from areas to be repaired. Surface defects greater than 1/2 inch in diameter and holes left by removal of tie rods in all surfaces not to receive additional concrete shall be reamed or chipped and filled with dry-pack mortar. The prepared area shall be brush-coated with an approved epoxy resin or latex bonding compound or with a neat cement grout after dampening and filled with mortar or concrete. The cement used in mortar or concrete for repairs to all surfaces permanently exposed to view shall be a blend of portland cement and white cement so that the final color when cured will be the same as adjacent concrete.

3.3.3 Finishing Unformed Surfaces

All unformed surfaces that are not to be covered by additional concrete or backfill shall be float finished to elevations shown, unless otherwise specified. Surfaces to receive additional concrete or backfill shall be brought to the elevations shown and left as a true and regular surface. Exterior surfaces shall be sloped for drainage unless otherwise shown.

Joints shall be carefully made with a jointing tool. Unformed surfaces shall be finished to a tolerance of 3/8 inch for a float finish as determined by a 10 foot straightedge placed on surfaces shown on the Drawings to be level or having a constant slope. Finishing shall not be performed while there is excess moisture or bleeding water on the surface. No water or cement shall be added to the surface during finishing.

3.3.3.1 Sandblast Finish

A sandblast finish shall be applied to all exposed landscape inclusive of seat walls, benches, and formed columns after concrete has cured to minimums specified. Finish shall match existing gateway finishes.

3.3.3.2 Broom Finish

A broom finish shall be applied to paved surfaces unless noted otherwise on the drawings. The concrete shall be screeded and floated to required finish plane with no coarse aggregate visible. After surface moisture disappears, the surface shall be broomed or brushed with a broom or fiber bristle brush in a direction transverse to that of the main traffic or as directed.

3.3.3.3 Expansion and Contraction Joints

As specified in Section 03150, EXPANSION JOINTS, CONTRACTION JOINTS, AND WATERSTOPS.

3.3.3.4 Installation of Water Stops

As specified in Section 03150, EXPANSION JOINTS, CONTRACTION JOINTS, AND WATERSTOPS

3.4 CURING AND PROTECTION

Beginning immediately after placement and continuing for at least 7 days, all concrete shall be cured and protected from premature drying, extremes in temperature, rapid temperature change, freezing, mechanical damage, and exposure to rain or flowing water. All materials and equipment needed for adequate curing and protection shall be available and at the site of the placement prior to the start of concrete placement. Preservation of moisture for concrete surfaces not in contact with forms shall be accomplished by one of the following methods:

a. Continuous sprinkling or ponding.

b. Application of absorptive mats or fabrics kept continuously wet.

c. Application of sand kept continuously wet.

d. Application of impervious sheet material conforming to ASTM C 171.

e. Application of membrane-forming curing compound conforming to ASTM C 309, Type 1-D, on surfaces permanently exposed to view and Type 2 on other surfaces shall be accomplished in accordance with

manufacturer's instructions.

The preservation of moisture for concrete surfaces placed against wooden forms shall be accomplished by keeping the forms continuously wet for 7 days. If forms are removed prior to end of the required curing period, other curing methods shall be used for the balance of the curing period. During the period of protection removal, the temperature of the air in contact with the concrete shall not be allowed to drop more than 25 degrees F within a 24 hour period.

3.5 INSTALLATION OF PRECAST WETWELLS

As specified in Section 03410, PRECAST WETWELLS.

3.6 TESTS AND INSPECTIONS

3.6.1 General

The individuals who sample and test concrete as required in this specification shall have demonstrated a knowledge and ability to perform the necessary test procedures equivalent to the ACI minimum guidelines for certification of Concrete Field Testing Technicians, Grade I.

3.6.2 Inspection Details and Frequency of Testing

3.6.2.1 Preparations for Placing

Foundation or construction joints, forms, and embedded items shall be inspected in sufficient time prior to each concrete placement by the Contractor to certify that it is ready to receive concrete.

3.6.2.2 Air Content

Air content shall be checked at least once during each shift that concrete is placed. Samples shall be obtained in accordance with ASTM C 172 and tested in accordance with ASTM C 231.

3.6.2.3 Slump

Slump shall be checked once during each shift that concrete is produced. Samples shall be obtained in accordance with ASTM C 172 and tested in accordance with ASTM C 143/C 143M.

3.6.2.4 Consolidation and Protection

The Contractor shall ensure that the concrete is properly consolidated, finished, protected, and cured.

3.6.3 Action Required

3.6.3.1 Placing

The placing foreman shall not permit placing to begin until he has verified that an adequate number of acceptable vibrators, which are in working order

and have competent operators, are available. Placing shall not be continued if any pile is inadequately consolidated.

3.6.3.2 Air Content

Whenever a test result is outside the specification limits, the concrete shall not be delivered to the forms and an adjustment shall be made to the dosage of the air-entrainment admixture.

3.6.3.3 Slump

Whenever a test result is outside the specification limits, the concrete shall not be delivered to the forms and an adjustment should be made in the batch weights of water and fine aggregate. The adjustments are to be made so that the water-cement ratio does not exceed that specified in the submitted concrete mixture proportion.

3.6.4 Reports

The results of all tests and inspections conducted at the project site shall be reported informally at the end of each shift and in writing weekly and shall be delivered within 3 days after the end of each weekly reporting period. See Section 01451, CONTRACTOR QUALITY CONTROL.

-- End of Section --

SECTION TABLE OF CONTENTS

DIVISION 03 - CONCRETE

SECTION 03371

SHOTCRETE

PART 1 GENERAL

1.1 REFERENCES
1.2 SUBMITTALS
1.3 QUALITY ASSURANCE
1.4 MIXTURE PROPORTIONS
1.5 EVALUATION AND ACCEPTANCE
1.5.1 Strength
1.5.1.1 Compressive Strength
1.6 QUALIFICATIONS
1.7 PRECONSTRUCTION TEST PANELS

PART 2 PRODUCTS

2.1 MATERIALS
2.1.1 Cementitious Materials
2.1.1.1 Portland Cement
2.1.1.2 Blended Hydraulic Cement
2.1.1.3 Pozzolan Other Than Silica Fume
2.1.1.4 Silica Fume
2.1.2 Aggregates
2.1.3 Water
2.1.4 Admixtures
2.1.4.1 Accelerators
2.1.5 Curing Materials
2.1.5.1 Impervious Sheet Materials
2.1.5.2 Membrane-Forming Curing Compound
2.1.6 Reinforcement
2.1.6.1 Steel Fiber Reinforcement
2.1.6.2 Other Types of Reinforcement

PART 3 EXECUTION

3.1 PRODUCTION OF SHOTCRETE
3.1.1 Dry Mix Process
3.1.1.1 Batching and Mixing
3.1.1.2 Delivery Equipment
3.1.2 Wet Mix Process
3.1.2.1 Batching and Mixing
3.1.2.2 Delivery Equipment
3.1.2.3 Air Content
3.1.3 Air Supply
3.2 PREPARATION OF SURFACES

3.2.1 Earth
3.2.2 Existing Concrete
3.2.3 Rock
3.2.4 Shotcrete
3.2.5 Construction Joints
3.3 PLACEMENT OF SHOTCRETE
3.3.1 General
3.3.2 Placement Techniques
3.3.2.1 Placement Control
3.3.2.2 Corners
3.3.3 Placement Around Reinforcement
3.3.4 Cover of Reinforcement
3.3.5 Placement Precautions
3.4 REPAIR OF DEFECTS
3.4.1 Defects
3.4.1.1 Repairs
3.4.1.2 Minor Patching
3.4.2 Core Holes
3.5 FINISHING
3.5.1 Natural Gun Finish
3.5.2 Cutting Screed
3.5.3 Flash Coat
3.5.4 Float and Trowel Finish
3.5.5 Fiber-Reinforced Shotcrete
3.6 CURING AND PROTECTION
3.6.1 Initial Curing
3.6.2 Final Curing
3.6.3 Formed Surface
3.6.4 Duration of Curing
3.6.5 Temperature Considerations
3.7 TESTS
3.7.1 Strength Testing
3.7.1.1 Test Panel
3.7.1.2 Test Cores
3.7.1.3 Compressive Strength
3.7.2 Aggregate Moisture
3.7.3 Grading
3.7.4 Thickness
3.7.5 Mixture Proportions
3.7.6 Preparations
3.7.7 Air Content

-- End of Section Table of Contents --

SECTION 03371

SHOTCRETE

PART 1 GENERAL

1.1 REFERENCES

The publications listed below form a part of this specification to the extent referenced. The publications are referred to in the text by basic designation only.

ACI INTERNATIONAL (ACI)

ACI 506.3R	(1991) Guide to Certification of Shotcrete Nozzlemen

ASTM INTERNATIONAL (ASTM)

ASTM A 820	(2001) Steel Fibers for Fiber-Reinforced Concrete
ASTM C 33	(2001a) Concrete Aggregates
ASTM C 42/C 42M	(1999) Obtaining and Testing Drilled Cores and Sawed Beam of Concrete
ASTM C 94/C 94M	(2000e2) Ready-Mixed Concrete
ASTM C 136	(2001) Sieve Analysis of Fine and Coarse Aggregates
ASTM C 150	(2002) Portland Cement
ASTM C 171	(1997a) Sheet Materials for Curing Concrete
ASTM C 231	(1997el) Air Content of Freshly Mixed Concrete by the Pressure Method
ASTM C 266	(1999) Time of Setting of Hydraulic-Cement Paste by Gillmore Needles
ASTM C 309	(1998a) Liquid Membrane-Forming Compounds for Curing Concrete
ASTM C 566	(1997) Total Evaporable Moisture Content of Aggregate by Drying
ASTM C 595	(2002) Blended Hydraulic Cements

ASTM C 618	(2001) Coal Fly Ash and Raw or Calcined Natural Pozzolan for Use as a Mineral Admixture in Concrete
ASTM C 685	(2000) Concrete Made by Volumetric Batching and Continuous Mixing
ASTM C 881	(1999) Epoxy-Resin-Base Bonding Systems for Concrete
ASTM C 1077	(2002) Laboratories Testing Concrete and Concrete Aggregates for Use in Construction and Criteria for Laboratory Evaluation
ASTM C 1140	(1998) Preparing and Testing Specimens from Shotcrete Test Panels
ASTM C 1141	(2001) Admixtures for Shotcrete
ASTM C 1240	(2001) Silica Fume for Use as a Mineral Admixture in Hydraulic-Cement Concrete, Mortar and Grout

U.S. ARMY CORPS OF ENGINEERS (USACE)

COE CRD-C 400	(1963) Requirements for Water for Use in Mixing or Curing Concrete

1.2 SUBMITTALS

Government approval is required for submittals with a "G" designation; submittals not having a "G" designation are for information only. When used, a designation following the "G" designation identifies the office that will review the submittal for the Government. The following shall be submitted in accordance with Section 01330 SUBMITTAL PROCEDURES:

SD-06 Test Reports

Mixture Proportions; G, RE

The recommended mixture proportions, sources of materials, and all test results shall be submitted for approval.

Aggregates; G, RE

Supplier's test reports for aggregates showing the materials meet the requirements of this specification.

Accelerator Compatibility; G, RE

The Contractor shall establish the compatibility of the job cement and the proposed accelerators.

Preconstruction Test Panels; G, RE

Cores and sawed concrete beams shall be taken from test panels and tested.

SD-07 Certificates

Portland Cement; G, RE

Portland cement shall be certified for compliance with all specification requirements.

Pozzolans; G, RE

Fly ash and other pozzolans shall be certified for compliance with all specification requirements.

Silica Fume; G, RE

Silica fume shall be certified for compliance with all specification requirements.

Accelerating Admixtures; G, RE

Accelerating admixtures shall be certified for compliance with all specification requirements.

Curing Materials; G, RE

Curing materials shall be certified for compliance with all specification requirements.

Qualifications; G, RE

Qualifications of each nozzleman shall be certified.

Reinforcement; G, RE

Reinforcement shall be certified for conformance with all specification requirements.

1.3 QUALITY ASSURANCE

The Contractor shall provide facilities and labor as may be necessary for obtaining and testing representative test samples. Shotcrete shall be sampled and tested by the method given in paragraph STRENGTH TESTING.

1.4 MIXTURE PROPORTIONS

Mixture proportions and test data from prior experience within 3 years, if available, may be submitted for approval. If test data from experience are not available or accepted, specimens shall be made and tested from mixtures having three or more different proportions. The recommended mixture proportions, sources of materials, and all test results shall be submitted

for acceptance. Mixture proportions for nonfiber-reinforced shotcrete shall be selected on the basis of compressive strength tests of cores obtained from test panels fabricated in accordance with ASTM C 1140 and having minimum dimensions of 30 by 30 by 4 inches. Cores shall be continuously moist cured until testing at 28 days age. For mixture acceptance purposes, the average compressive strength of at least three cores shall be at least equal to 1.2 times the required compressive strength specified in paragraph COMPRESSIVE STRENGTH.

1.5 EVALUATION AND ACCEPTANCE

1.5.1 Strength

Final acceptance of the shotcrete will be based on compressive strength results obtained from cores.

1.5.1.1 Compressive Strength

The required compressive strength of cores shall not be less than 4000 psi at 28 days age when tested in accordance with ASTM C 42/C 42M. The average compressive strength of cores taken from the test panel, representing a shift or not more than 50 cubic yards of shotcrete tested at 28 days of age, shall equal or exceed the required compressive strength specified with no individual core less than 85 percent of the required compressive strength. When the length of a core is less than 1.94 times the diameter, the correction factors given in ASTM C 42/C 42M will be applied to obtain the compressive strength of individual cores.

1.6 QUALIFICATIONS

The Contractor shall submit a resume for each nozzleman certifying that each has not less than 1 year's experience for the particular type of shotcrete to be applied. The resume shall include company name, address, and telephone number, name of supervisor, and detailed description of work performed. All nozzlemen shall be certified in accordance with ACI 506.3R. Qualifications of additional nozzlemen throughout the job shall be similarly submitted for approval.

1.7 PRECONSTRUCTION TEST PANELS

Specimens of the preconstruction test panels shall be made by each application crew using the equipment, materials, mixture proportions, and procedures for each mixture being considered, and for each shooting position to be encountered in the job. The same reinforcement as in the structure shall be provided in at least one-half of the panel to test for proper embedment of reinforcing steel. The test panels shall be fabricated to the same thickness as the structure, but not less than 4 inches. At least five 3 inch diameter cores from each panel shall be taken for testing for compressive strength in accordance with ASTM C 1140 when nonfiber-reinforced shotcrete is used. The compressive strength of the cores shall meet the requirements specified in paragraph COMPRESSIVE STRENGTH.

PART 2 PRODUCTS

2.1 MATERIALS

2.1.1 Cementitious Materials

Cementitious materials shall be portland cement, blended hydraulic cement, portland cement in combination with pozzolan or ground granulated blast-furnace slag (GGBFS), or portland cement in combination with silica fume and shall conform to appropriate specifications listed below.

2.1.1.1 Portland Cement

Portland cement shall meet the requirements of ASTM C 150 Type II.

2.1.1.2 Blended Hydraulic Cement

ASTM C 595 Type IS, IP.

2.1.1.3 Pozzolan Other Than Silica Fume

Pozzolans shall conform to ASTM C 618, Class C or F, with the optional requirements for available alkalies from Table 1A multiple factor, drying shrinkage, and uniformity of Table 2A.

2.1.1.4 Silica Fume

Silica may be furnished as a dry, densified material or as a slurry. Silica fume, unprocessed, or before processing into a slurry or a densified material, shall conform to ASTM C 1240.

2.1.2 Aggregates

Aggregates shall conform to ASTM C 33 with the combined grading of coarse and fine aggregates conforming to the grading shown below.

	PERCENT BY MASS PASSING INDIVIDUAL SIEVES		
SIEVE SIZE	GRADING NO. 1	GRADING NO. 2	GRADING NO. 3*
19.0 mm (3/4 in.)	--	--	100
12.5 mm (1/2 in.)	--	100	80-95
9.5 mm (3/8 in.)	100	90-100	70-90
4.75 mm (No. 4)	95-100	75-85	50-70
2.36 mm (No. 8)	80-100	50-70	35-55
1.18 mm (No. 16)	50-85	35-55	20-40
600 µm (No. 30)	25-60	20-35	10-30
300 µm (No. 50)	10-30	8-20	5-17
150 µm (No. 100)	2-10	2-10	2-10

* Fine and coarse aggregates shall be batched separately to avoid segregation.

2.1.3 Water

Fresh, clean, potable mixing water or nonpotable water which meets the

requirements of COE CRD-C 400 shall be used.

2.1.4 Admixtures

Admixtures to be used, when required or approved, shall comply with the appropriate sections of ASTM C 1141. Except as otherwise accepted, soluble admixtures shall be dissolved in water before introduction into the shotcrete mixture.

2.1.4.1 Accelerators

When accelerating admixtures complying with ASTM C 1141, Type II, Grade 1, are to be used, the Contractor shall establish the accelerator compatibility of the job cement and the proposed accelerators using ASTM C 266, except as modified herein. The powdered accelerator shall be blended with 50 grams of cement until uniform and 15 milliliters of water shall then be added. The liquid accelerator shall first be mixed with 15 milliliters of water and then added to 50 grams of cement. Three percent of the proposed accelerator by mass of cement shall be used as a starting point. Mixing shall be accomplished within 15 seconds. The specimen shall be molded within 1 minute of adding the mixing water. If initial set is 2 minutes or less and a final set is 10 minutes or less, the accelerator is considered compatible. If these values are not achieved in the first test, additional tests shall be run using 2 percent and 4 percent of accelerator.

2.1.5 Curing Materials

Curing materials shall meet the following requirements.

2.1.5.1 Impervious Sheet Materials

ASTM C 171, type optional except polyethylene film, if used, shall be white opaque.

2.1.5.2 Membrane-Forming Curing Compound

ASTM C 309, Type 1-D or Type 2.

2.1.6 Reinforcement

2.1.6.1 Steel Fiber Reinforcement

Steel fiber reinforcement shall meet the requirements of ASTM A 820.

2.1.6.2 Other Types of Reinforcement

Section 03200, CONCRETE REINFORCEMENT for all other types of reinforcement.

PART 3 EXECUTION

3.1 PRODUCTION OF SHOTCRETE

The shotcrete shall be produced by wet-mix process.

3.1.1 Dry Mix Process

3.1.1.1 Batching and Mixing

Aggregate and cementitious materials may be batched by mass or by volume. Equipment for batching by mass shall be capable of the accuracy specified in ASTM C 94/C 94M. Volumetric equipment shall be capable of batching with the accuracy specified in ASTM C 685. The mixing equipment shall be capable of thoroughly mixing the materials in sufficient quantity to maintain placing continuity and be capable of discharging all mixed material without any carryover from one batch to the next.

3.1.1.2 Delivery Equipment

The equipment shall be capable of discharging the aggregate-cement mixture into the delivery hose and delivering a continuous smooth stream of uniformly mixed material to the discharge nozzle. The discharge nozzle shall be equipped with a manually operated water injection system (water ring) for directing an even distribution of water through the aggregate-cement mixture. The water valve shall be capable of ready adjustment to vary the quantity of water and shall be convenient to the nozzleman. The water pressure at the discharge nozzle shall be sufficiently greater than the operating air pressure to ensure that the water is completely mixed with the other materials. If the line water pressure is inadequate, a water pump shall be introduced into the line. The water pressure shall be steady (nonpulsating). The delivery equipment shall be thoroughly cleaned at the end of each shift. Equipment parts, especially the nozzle liner and water ring, shall be regularly inspected and replaced as required.

3.1.2 Wet Mix Process

3.1.2.1 Batching and Mixing

Batching and mixing shall be accomplished in accordance with the applicable provisions of ASTM C 94/C 94M. If volumetric batching and mixing are used, the materials shall be batched and mixed in accordance with the applicable provisions of ASTM C 685. The mixing equipment shall be capable of thoroughly mixing the specified materials in sufficient quantity to maintain continuous placing. Ready-mix shotcrete complying with ASTM C 94/C 94M may be used.

3.1.2.2 Delivery Equipment

The equipment shall be capable of delivering the premixed materials accurately, uniformly, and continuously through the delivery hose. Recommendations of the equipment manufacturer shall be followed on the type and size of nozzle to be used and on cleaning, inspection, and maintenance of the equipment.

3.1.2.3 Air Content

Air-entraining admixture shall be used in such proportion that the air content of the shotcrete prior to gunning shall be 3 plus or minus (±) 1.0

percent as determined by ASTM C 231.

3.1.3 Air Supply

The Contractor shall provide a supply of clean, dry air adequate for maintaining sufficient nozzle velocity for all parts of the work and, if required, for simultaneous operation of a suitable blowpipe for clearing away rebound.

3.2 PREPARATION OF SURFACES

3.2.1 Earth

Earth shall be compacted and trimmed to line and graded before placement of shotcrete. Surfaces to receive shotcrete shall be dampened.

3.2.2 Existing Concrete

All unsound and loose materials shall be removed by sandblasting, grinding, or high-pressure water jets before applying shotcrete. Any area to be repaired shall be chipped off or scarified to remove offsets which would cause an abrupt change in thickness without suitable reinforcement. Edges shall be tapered to leave no square shoulders at the perimeter of a cavity. The surface shall be dampened but without visible free water.

3.2.3 Rock

Rock surfaces shall be cleaned to remove loose or drummy material, mud, running water, and other foreign matter that will prevent bond of the shotcrete. The rock surface shall be dampened prior to placement of shotcrete.

3.2.4 Shotcrete

When a layer of shotcrete is to be covered by a succeeding layer at a later time, it shall first be allowed to develop its initial set. Then all laitance, loose material, and rebound shall be removed by brooming or scraping. Hardened laitance set shall be removed by sandblasting and the surface thoroughly cleaned.

3.2.5 Construction Joints

Unless otherwise specified, construction joints shall be tapered to a shallow edge form, about 1 inch thick. If nontapered joints are specified, special care shall be taken to avoid or remove trapped rebound at the joint. The entire joint shall be thoroughly cleaned and wetted prior to the application of additional shotcrete.

3.3 PLACEMENT OF SHOTCRETE

3.3.1 General

Shotcrete shall be placed using suitable delivery equipment and procedures. The area to which shotcrete is to be applied shall be clean and free of

rebound or overspray.

3.3.2 Placement Techniques

3.3.2.1 Placement Control

Thickness, method of support, air pressure, and water content of shotcrete shall be controlled to preclude sagging or sloughing off. Shotcreting shall be discontinued or suitable means shall be provided to screen the nozzle stream if wind or air currents cause separation of the nozzle stream during placement.

3.3.2.2 Corners

Horizontal and vertical corners and any area where rebound cannot escape or be blown free shall be filled first.

3.3.3 Placement Around Reinforcement

The nozzle shall be held at such distance and angle to place material behind reinforcement before any material is allowed to accumulate on the face of the reinforcement. In the dry-mix process, additional water may be added to the mixture when encasing reinforcement to facilitate a smooth flow of material behind the bars. Shotcrete shall not be placed through more than one layer of reinforcing steel rods or mesh in one application unless demonstrated by preconstruction tests that steel is properly encased.

3.3.4 Cover of Reinforcement

The following minimum cover shall be provided.

a. For shotcrete used as linings, coatings, slab, or wall: 1-1/2 inches.

b. For required structural reinforcement in beams, girders, and columns: 1-1/2 inches.

3.3.5 Placement Precautions

The following precautions shall be taken during placement.

a. Placement shall be stopped if drying or stiffening of the mixture takes place at any time prior to delivery to the nozzle.

b. Rebound or previously expended material shall not be used in the shotcrete mixture.

3.4 REPAIR OF DEFECTS

3.4.1 Defects

Defective areas larger than 48 square inches or 2 inches deep shall be removed and replaced with fresh shotcrete. These defects include honeycombing, lamination, dry patches, voids, or sand pockets. Defective

areas shall be removed in accordance with the procedures described in paragraph EXISTING CONCRETE and replaced with fresh shotcrete.

3.4.1.1 Repairs

All repairs shall be made within 1 week of the time the deficiency is discovered. All unacceptable materials shall be removed and repaired by the procedures described in the following two paragraphs. Voids and holes left by the removal of tie rods in all permanently exposed surfaces not to be backfilled and in surfaces to be exposed to water shall be reamed and completely filled with dry-patching mortar as specified below.

3.4.1.2 Minor Patching

Minor patching may be accomplished with a dry-pack mixture, or with materials as approved by the Contracting Officer. Patches that exceed 0.1 cubic foot in volume shall receive a brush coat of approved epoxy resin meeting ASTM C 881, Type II, as a prime coat. Care shall be taken not to spill epoxy or overcoat the repair surface so that the epoxy runs or is squeezed out onto the surface which will remain exposed to view. Epoxy resin shall be used in strict conformance with manufacturer's recommendations with special attention paid to pot life, safety, and thin film tack time.

3.4.2 Core Holes

Core holes shall not be repaired with shotcrete. Instead, they shall be filled solid with a dry-pack mixture after being cleaned and thoroughly dampened.

3.5 FINISHING

3.5.1 Natural Gun Finish

Unless otherwise specified, undisturbed final layer of shotcrete as applied from nozzle without hand finishing shall be provided.

3.5.2 Cutting Screed

After the surface has taken its initial set (crumbling slightly when cut), excess material outside the forms and ground wires shall be sliced off with a downward cutting motion using a sharp-edged cutting screed.

3.5.3 Flash Coat

A thin coat of shotcrete containing finer sand applied from a distance greater than normal shall be applied to the surface as soon as possible after the screeding.

3.5.4 Float and Trowel Finish

Final surface finish shall be provided using wood float. Troweling of thin sections of shotcrete shall be avoided unless both troweling and commencement of moisture curing take place within a relatively short period

after placement of shotcrete.

3.5.5 Fiber-Reinforced Shotcrete

The Contractor shall finish the outer surface of the structure with a layer of nonfiber-reinforced shotcrete and provide an appropriate finish as denoted.

3.6 CURING AND PROTECTION

3.6.1 Initial Curing

Immediately after finishing, shotcrete shall be kept continuously moist for at least 3 days. One of the following materials or methods shall be used:

a. Ponding or continuous sprinkling.

b. Absorptive mat or fabric, sand, or other covering kept continuously wet.

c. Curing Compounds. On natural gun or flash finishes, use the coverage application requirement of 100 square feet per gallon or twice the manufacturer's requirement, whichever is less. Curing compounds shall not be used on any surfaces against which additional shotcrete or other cementitious finishing materials are to be bonded unless positive measures, such as sandblasting, are taken to completely remove curing compounds prior to the application of such additional materials.

3.6.2 Final Curing

Additional curing shall be provided immediately following the initial curing and before the shotcrete has dried. One of the following materials or methods shall be used:

a. Continue the method used in initial curing.

b. Application of impervious sheet material conforming to ASTM C 171.

3.6.3 Formed Surface

If forms are to be removed during curing period, one of the curing materials or methods listed in paragraph INITIAL CURING shall be used immediately. Such curing shall be continued for the remainder of the curing period.

3.6.4 Duration of Curing

Curing shall be continued for the first 7 days after shotcreting or until the specified compressive strength of the in-place shotcrete as determined by specimens obtained and tested in accordance with ASTM C 42/C 42M is achieved.

3.6.5 Temperature Considerations

The air temperature in contact with the shotcrete shall be continuously maintained at a temperature above 40 degrees F for at least 7 days after placement. No shotcrete shall be applied when the concrete surface or air in contact with the concrete surface is below 40 degrees F.

3.7 TESTS

3.7.1 Strength Testing

Test specimens shall be initially cured onsite, then shall be transported in an approved manner to an approved testing laboratory meeting the requirements of ASTM C 1077 within 48 hours of scheduled testing time.

3.7.1.1 Test Panel

One test panel shall be made for every 50 cubic yards of shotcrete placed but not less than one per each shift during which any shotcrete is placed. Panels shall have minimum dimensions of 18 by 18 by 4 inches and shall be gunned in the same positions as the work represented during the course of the work by the Contractor's regular nozzleman. Panels shall be field cured in the same manner as in the job. Three 3 inch diameter cores shall be drilled from each panel at least 40 hours prior to testing and tested in accordance with ASTM C 1140. If the quality of shotcrete is questionable, the Government may saw or core the panel specimens to determine the shotcrete quality and if remedial action is necessary.

3.7.1.2 Test Cores

Test cores shall be drilled from the structure at least 40 hours prior to testing and tested in accordance with ASTM C 1140. A set of three cores shall be taken not less than once each shift that shotcrete is placed nor less than once for each 50 cubic yards of shotcrete placed through the nozzle. The diameter of core specimens shall be determined in accordance with ASTM C 42/C 42M.

3.7.1.3 Compressive Strength

The compressive strength of the shotcrete shall be determined from the average of three cores obtained from a test panel representing a specific volume of shotcrete and tested on the 28th day after panel fabrication

3.7.2 Aggregate Moisture

Prior to batching the shotcrete and at least once during a shift in which shotcrete is being batched, the coarse and fine aggregate moisture content shall be determined in accordance with ASTM C 566. The batch weights of both the aggregates and mixing water shall be appropriately adjusted to account for the available free moisture in the aggregates. The amount of free moisture in the aggregates, expressed as pounds of water per cubic yard, shall be recorded on the batching ticket and delivered to the Contracting Officer prior to placement during the shift. The Contracting Officer will have the option to request additional aggregate moisture content tests for each of the required tests.

3.7.3 Grading

The grading of the coarse and fine aggregate shall be determined in accordance with ASTM C 136. The fine and coarse aggregate grading shall be determined prior to batching the shotcrete and at least once during a shift in which shotcrete is being batched. The Contracting Officer will have the option to require one additional sieve analysis test for aggregate type.

3.7.4 Thickness

The minimum shotcrete thickness shall be as shown in the Drawings. The unhardened shotcrete shall be checked for thickness using a probe by the nozzleman or laborer at the time of placement. These thickness checks shall be at 15-minute intervals and all low or thin areas shall be corrected by applying additional shotcrete.

3.7.5 Mixture Proportions

Record and check mixture proportions at least once per shift for weigh batching. Record and check mixture proportions as recommended by ASTM C 685 at least once per shift for volumetric batching and continuous mixing plants.

3.7.6 Preparations

Prior to each placement of shotcrete, the Contractor's inspector shall certify in writing or by an approved checkout form that cleanup and preparations are in accordance with the drawings and specifications.

3.7.7 Air Content

Air content tests shall be conducted on wet-mix shotcrete according to ASTM C 231 with a frequency of not less than once each shift nor less than once for each 50 cubic yards of shotcrete placed through the nozzle. Tests shall be conducted on samples taken as the wet shotcrete mixture is placed in the delivery equipment.

-- End of Section --

SECTION TABLE OF CONTENTS

DIVISION 03 - CONCRETE

SECTION 03410

PRECAST WETWELLS

PART 1 GENERAL

1.1 REFERENCES
1.2 PRECAST MEMBERS
1.3 SUBMITTALS
1.4 QUALITY CONTROL
1.4.1 Precast Concrete Wetwell Design
1.4.2 Product Quality Control
1.5 DELIVERY AND STORAGE
1.6 FACTORY INSPECTION
1.7 QUALITY ASSURANCE
1.7.1 Drawing Information
1.7.2 Design Calculations
1.7.3 Concrete Mix Design
1.7.4 Certificates: Record Requirement

PART 2 PRODUCTS

2.1 PRECAST WETWELL SECTIONS
2.1.1 Riser Sections
2.1.2 Cone Section
2.1.3 Base Sections and Base Slab
2.1.4 Manhole Extensions
2.2 MANHOLE FRAMES AND COVER
2.2.1 Castings
2.2.2 Cover
2.3 CONTRACTOR-FURNISHED MIX DESIGN
2.4 MATERIALS
2.4.1 Cement
2.4.1.1 Fly Ash and Pozzolan
2.4.1.2 Ground Iron Blast-Furnace Slag
2.4.2 Water
2.4.3 Aggregates
2.4.3.1 Aggregates Selection
2.4.4 Grout
2.4.4.1 Nonshrink Grout
2.4.4.2 Cementitious Grout
2.4.5 Admixtures
2.4.5.1 Air-Entraining
2.4.5.2 Accelerating
2.4.5.3 Water Reducing
2.4.6 Reinforcement
2.4.6.1 Reinforcing Bars
2.4.6.2 Welded Wire Fabric
2.4.7 Metal Accessories

2.4.7.1 Inserts
2.4.7.2 Structural Steel
2.4.7.3 Bolts
2.4.7.4 Nuts
2.4.7.5 Washers
2.5 FABRICATION
2.5.1 Forms
2.5.2 Reinforcement Placement
2.5.3 Concrete
2.5.3.1 Concrete Mixing
2.5.3.2 Concrete Placing
2.5.3.3 Concrete Curing
2.5.4 Surface Finish
2.5.4.1 Unformed Surfaces
2.5.4.2 Formed Surfaces

PART 3 EXECUTION

3.1 SURFACE REPAIR
3.2 ERECTION
3.3 INSTALLATION OF PRECAST MANHOLES
3.3.1 Concrete Base
3.3.2 Sections
3.3.3 Performed Plastic Gaskets (In lieu of Mortar Joints)
3.4 MANHOLE INVERT
3.5 CAST-IN-PLACE MANHOLE
3.5.1 Reinforcing Steel
3.5.2 Concrete
3.6 MANHOLE FRAMES AND COVERS
3.7 GROUTING
3.8 SEALANTS

-- End of Section Table of Contents --

SECTION 03410

PRECAST WETWELLS

PART 1 GENERAL

1.1 REFERENCES

The publications listed below form a part of this specification to the extent referenced. The publications are referred to in the text by the basic designation only.

ACI INTERNATIONAL (ACI)

ACI 304R	(2000) Measuring, Mixing, Transporting, and Placing Concrete
ACI 305R	(1999) Hot Weather Concreting
ACI 306.1	(1990; R 1998) Cold Weather Concreting
ACI 309R	(1996) Consolidation of Concrete
ACI 318/318R	(1999) Building Code Requirements for Structural Concrete and Commentary

ASTM INTERNATIONAL (ASTM)

ASTM A 27/A 27M	(1995; R 2000) Steel Castings, Carbon, for General Application
ASTM A 36/A 36M	(2001) Carbon Structural Steel
ASTM A 47	(1999) Ferritic Malleable Iron Castings
ASTM A 48/A 48M	(2000) Gray Iron Castings
ASTM A 123/A 123M	(2001a) Zinc (Hot-Dip Galvanized) Coatings on Iron and Steel Products
ASTM A 153/A 153M	(2001a) Zinc Coating (Hot-Dip) on Iron and Steel Hardware
ASTM A 185	(2001) Steel Welded Wire Fabric, Plain, for Concrete Reinforcement
ASTM A 307	(2000) Carbon Steel Bolts and Studs, 60 000 PSI Tensile Strength
ASTM A 325	(2002) Structural Bolts, Steel, Heat

	Treated, 120/105 ksi Minimum Tensile Strength
ASTM A 497	(2001) Steel Welded Wire Fabric, Deformed, for Concrete Reinforcement
ASTM A 536	(1984; R 1999el) Ductile Iron Castings
ASTM A 563	(2000) Carbon and Alloy Steel Nuts
ASTM A 706/A 706M	(2001) Low-Alloy Steel Deformed and Plain Bars for Concrete Reinforcement
ASTM C 33	(2001a) Concrete Aggregates
ASTM C 94/C 94M	(2000e2) Ready-Mixed Concrete
ASTM C 150	(2002) Portland Cement
ASTM C 260	(2001) Air-Entraining Admixtures for Concrete
ASTM C 478	(1997) Precast Reinforced Concrete Manhole Sections
ASTM C 494/C 494M	(1999ae1) Chemical Admixtures for Concrete
ASTM C 618	(2001) Coal Fly Ash and Raw or Calcined Natural Pozzolan for Use as a Mineral Admixture in Concrete
ASTM C 989	(1999) Ground Granulated Blast-Furnace Slag for Use in Concrete and Mortars
ASTM C 1107	(2002) Packaged Dry, Hydraulic-Cement Grout (Nonshrink)
ASTM F 436	(1993; R 2000) Hardened Steel Washers
ASTM F 844	(2000) Washers, Steel, Plain (Flat), Unhardened for General Use

PRECAST/PRESTRESSED CONCRETE INSTITUTE (PCI)

PCI MNL-116	(1999) Quality Control for Plants and Production of Precast Prestressed Concrete Products
PCI MNL-120	(1999) Design Handbook - Precast and Prestressed Concrete

1.2 PRECAST MEMBERS

The work includes the provision of precast non-prestressed concrete herein

referred to as precast members. Precast members shall be the product of a manufacturer specializing in the production of precast concrete members. In the ACI publications, the advisory provisions shall be considered to be mandatory, as though the word "shall" has been substituted for "should" wherever it appears; reference to the "Building Official," the "Structural Engineer" and the "Architect/Engineer" shall be interpreted to mean the Contracting Officer.

1.3 SUBMITTALS

Government approval is required for submittals with a "G" designation; submittals not having a "G" designation are for information only. When used, a designation following the "G" designation identifies the office that will review the submittal for the Government. The following shall be submitted in accordance with Section 01330, SUBMITTAL PROCEDURES:

SD-02 Shop Drawings

Precast Wetwell Sections; G, RE

SD-05 Design Data

Wetwell Design Calculations; G, RE

Concrete mix design

SD-06 Test Reports

Contractor-furnished mix design

Submit copies of test reports showing that the mix has been successfully tested to produce concrete with the properties specified and will be suitable for the job conditions. Obtain approval before concrete placement.

SD-07 Certificates

Fabrication

Submit quality control procedures established in accordance with ASTM C 478 by the precast manufacturer.

SD-11 Closeout Submittals

Batch Tickets

Submit concrete batch ticket information.

1.4 QUALITY CONTROL

1.4.1 Precast Concrete Wetwell Design

ACI 318/318R and the ASTM C 478. Design Precast Wetwell Sections for the design load conditions indicated, and for additional loads imposed by

openings, mechanical equipment, and supports of the work of other trades. Design precast members for handling without cracking.

1.4.2 Product Quality Control

Plants shall be certified by the PCI Plant Certification Program for Category C1 work.

1.5 DELIVERY AND STORAGE

Lift and support precast wetwell sections at the lifting and supporting points indicated on the shop Drawings. Store precast wetwell sections off the ground. Separate stacked precast sections by battens across the full width of each bearing point. Protect from weather, marring, damage, and overload.

1.6 FACTORY INSPECTION

At the option of the Contracting Officer, precast sections may be inspected by the Contracting Officer prior to being transported to the job site. The Contractor shall give notice 14 days prior to the time the units will be available for plant inspection. Neither the exercise nor waiver of inspection at the plant will affect the Government's right to enforce contractual provisions after units are transported or erected.

1.7 QUALITY ASSURANCE

1.7.1 Drawing Information

Submit Drawings indicating complete information for the fabrication, handling, and erection of the precast section. Drawings shall not be reproductions of Contract Drawings. Design calculations and Drawings of Precast Wetwell Sections (including connections) shall be prepared and sealed by a registered professional engineer, and submitted for approval prior to fabrication. The Drawings shall indicate, as a minimum, the following information:

a. Marking of sections

b. Connections for work of other trades

c. Connections between members, and connections between members and other construction

d. Location and size of openings

e. Headers for openings

f. Joints between members, and joints between members and other construction

g. Reinforcing details

h. Material properties of steel and concrete used

i. Lifting and erection inserts

j. Dimensions and surface finishes of each section

k. Erection sequence and handling requirements

l. All loads used in design (such as live, dead, handling, and erection)

m. Bracing/shoring required

1.7.2 Design Calculations

Submit calculations reflecting design conforming to requirements of paragraph entitled "Precast Concrete Wetwell Design." Wetwell Design Calculations and Drawings of precast wetwell sections shall be prepared and sealed by a registered professional engineer, and submitted for approval prior to fabrication.

1.7.3 Concrete Mix Design

Thirty days minimum prior to concrete placement, submit a mix design for each strength and type of concrete. Include a complete list of materials including type; brand; source and amount of cement, pozzolan, and admixtures; and applicable reference specifications.

1.7.4 Certificates: Record Requirement

ASTM C 94/C 94M. Submit mandatory Batch Tickets for each load of ready-mixed concrete.

PART 2 PRODUCTS

2.1 PRECAST WETWELL SECTIONS

2.1.1 Riser Sections

a. Minimum 48 inches in diameter.

b. Fabricate in accordance with ASTM C 478.

c. Minimum Wall Thickness: 4 inches or 1/12 times inside diameter, whichever is greater.

d. Top and bottom shall be parallel.

e. Joints: Tongue-and-groove or confined groove with mortar.

2.1.2 Cone Section

a. Provide eccentric cones.

b. Same wall thickness and reinforcement as riser section.

2.1.3 Base Sections and Base Slab

a. Base Sections: Base slab integral with sidewalls.

b. Fabricate in accordance with ASTM C 478.

2.1.4 Manhole Extensions

a. Concrete grade rings; maximum 6 inches high.

b. Fabricate in accordance with ASTM C 478.

c. "Chimney" shall be no more than 18 inches tall.

2.2 MANHOLE FRAMES AND COVER

2.2.1 Castings

a. Tough, close-grained gray iron, sound, smooth, clean, free from blisters, blowholes, shrinkage, cold shuts, and defects.

b. Cast Iron: ASTM A 48/A 48M Class 30B.

c. Ductile Iron: ASTM A 536, Grade 60-40-12.

d. Plane or grind bearing surfaces to ensure flat, true surfaces.

2.2.2 Cover

True and seat within ring at all points with the word DRAIN in 2-inch raised letters.

2.3 CONTRACTOR-FURNISHED MIX DESIGN

ACI 318/318R. The minimum compressive strength of concrete at 28 days shall be 4000 psi, unless otherwise indicated.

2.4 MATERIALS

2.4.1 Cement

ASTM C 150, Type II; blended cement, except as modified herein. The blended cement shall consist of a mixture of ASTM C 150 cement and one of the following materials: ASTM C 618 pozzolan or fly ash, or ASTM C 989 ground iron blast furnace slag. The pozzolan/fly ash content shall not exceed 25 percent by weight of the total cementitious material. For exposed concrete, use one manufacturer for each type of cement, ground slag, fly ash, and pozzolan.

2.4.1.1 Fly Ash and Pozzolan

ASTM C 618, Type N, F, or C, except that the maximum allowable loss on ignition shall be 6 percent for Type N and F.

2.4.1.2 Ground Iron Blast-Furnace Slag

ASTM C 989, Grade 100 or 120.

2.4.2 Water

Water shall be fresh, clean, and potable.

2.4.3 Aggregates

2.4.3.1 Aggregates Selection

ASTM C 33, Size 57, except as modified herein. Obtain aggregates for exposed concrete surfaces from one source. Aggregates shall not contain any substance which may be deleteriously reactive with the alkalies in the cement.

2.4.4 Grout

2.4.4.1 Nonshrink Grout

ASTM C 1107.

2.4.4.2 Cementitious Grout

Shall be a mixture of portland cement, sand, and water. Proportion one part cement to approximately 2.5 parts sand, with the amount of water based on placement method.

2.4.5 Admixtures

2.4.5.1 Air-Entraining

ASTM C 260.

2.4.5.2 Accelerating

ASTM C 494/C 494M, Type C or E.

2.4.5.3 Water Reducing

ASTM C 494/C 494M, Type A, E, or F.

2.4.6 Reinforcement

2.4.6.1 Reinforcing Bars

ASTM A 706/A 706M, Grade 60.

2.4.6.2 Welded Wire Fabric

ASTM A 185 or ASTM A 497.

2.4.7 Metal Accessories

Provide ASTM A 123/A 123M or ASTM A 153/A 153M galvanized.

2.4.7.1 Inserts

ASTM A 47, Grade 32510 or 35018, or ASTM A 27/A 27M Grade U-60-30.

2.4.7.2 Structural Steel

ASTM A 36/A 36M.

2.4.7.3 Bolts

ASTM A 307; ASTM A 325.

2.4.7.4 Nuts

ASTM A 563.

2.4.7.5 Washers

ASTM F 844 washers for ASTM A 307 bolts, and ASTM F 436 washers for ASTM A 325 bolts.

2.5 FABRICATION

PCI MNL-116 unless specified otherwise.

2.5.1 Forms

Brace forms to prevent deformation. Forms shall produce a smooth, dense surface. Chamfer exposed edges of columns and beams 3/4 inch, unless otherwise indicated. Provide threaded or snap-off type form ties.

2.5.2 Reinforcement Placement

ACI 318/318R for placement and splicing. Reinforcement may be preassembled before placement in forms. Provide exposed connecting bars, or other approved connection methods, between precast and cast-in-place construction. Remove any excess mortar that adheres to the exposed connections.

2.5.3 Concrete

2.5.3.1 Concrete Mixing

ASTM C 94/C 94M. Mixing operations shall produce batch-to-batch uniformity of strength, consistency, and appearance.

2.5.3.2 Concrete Placing

ACI 304R, ACI 305R for hot weather concreting, ACI 306.1 for cold weather concreting, and ACI 309R, unless otherwise specified.

2.5.3.3 Concrete Curing

Commence curing immediately following the initial set and completion of surface finishing. Provide curing procedures to keep the temperature of the concrete between 50 and 190 degrees F. When accelerated curing is used, apply heat at controlled rate and uniformly along the casting beds. Monitor temperatures at various points in a product line in different casts.

2.5.4 Surface Finish

Repairs shall be approved by the Contracting Officer prior to repairs. Any precast member that is structurally impaired or contains honeycombed section deep enough to expose reinforcing shall be rejected.

2.5.4.1 Unformed Surfaces

Provide a steel troweled finish.

2.5.4.2 Formed Surfaces

PCI MNL-116 (Appendix A - Commentary), Chapter 3, for grades of surface finishes.

a. Unexposed Surfaces: Provide a standard grade surface finish.

PART 3 EXECUTION

3.1 SURFACE REPAIR

Prior to erection, and again after installation, precast wetwell sections shall be checked for damage, such as cracking, spalling, and honeycombing. As directed by the Contracting Officer, precast wetwell sections that do not meet the surface finish requirements specified in Part 2 in paragraph entitled "Surface Finish" shall be repaired, or removed and replaced with new precast members.

3.2 ERECTION

Precast wetwell sections shall be erected after the concrete has attained the specified compressive strength, unless otherwise approved by the precast manufacturer. Erect in accordance with the approved shop drawings. PCI MNL-116 and PCI MNL-120 (Chapter 8), for tolerances. Brace precast members, unless design calculations submitted with the shop Drawings indicate bracing is not required. Follow the manufacturer's recommendations for maximum construction loads. Place precast members level, plumb, square, and true within tolerances. Align member ends.

3.3 INSTALLATION OF PRECAST MANHOLES

3.3.1 Concrete Base

a. Cast-In-Place:

1. Vibrate to densify concrete and screed so first precast manhole section to be placed has a level, uniform bearing for full circumference.
2. Deposit sufficient mortar on base to assure watertight seal between base and manhole wall, or place first precast section of manhole in concrete base before concrete has set. Properly locate and plumb first section.

b. Precast:

1. Place on compacted imported base material.

2. Properly locate, ensure firm bearing throughout, and plumb finish section.

3.3.2 Sections

a. Thoroughly clean ends of sections to be joined.

b. Locate precast steps in line with each other to provide continuous vertical ladder.

3.3.3 Performed Plastic Gaskets (In lieu of Mortar Joints)

a. Carefully inspect precast manhole sections to be joined.

b. Do not use sections with chips or cracks in tongue.

c. Use only pipe primer furnished by gasket manufacturer.

d. Install gasket material in accordance with manufacturer's instructions.

e. Completed manholes shall be rigid and watertight.

3.4 MANHOLE INVERT

a. Construct with smooth transitions to ensure an unobstructed flow through manhole. Remove sharp edges or rough sections that tend to obstruct flow.

b. Where full section of pipe is laid through manhole, break out top section as shown and cover exposed edge of pipe completely with mortar. Trowel mortar surfaces smooth.

3.5 CAST-IN-PLACE MANHOLE

3.5.1 Reinforcing Steel

Install as specified in Section 05120, STRUCTURAL STEEL.

3.5.2 Concrete

Install as specified in Section 03101, FORMWORK FOR CONCRETE.

3.6 MANHOLE FRAMES AND COVERS

a. Set frames in bed of mortar with mortar carried over flange as shown.

b. Set tops of covers flush with surface of adjoining pavement or ground surface, unless otherwise shown or directed.

c. At locations shown, install exterior manhole frame to structure seals in accordance with manufacturer's instructions.

3.7 GROUTING

Clean and fill keyways between precast members, and other indicated areas, solidly with nonshrink grout or cementitious grout. Provide reinforcing where indicated. Remove excess grout before hardening.

3.8 SEALANTS

Provide as indicated and as specified in Section 07920, JOINT SEALANTS.

-- End of Section --

SECTION TABLE OF CONTENTS

DIVISION 03 - CONCRETE

SECTION 03600

GROUT

PART 1 GENERAL

1.1 REFERENCES
1.2 SUBMITTALS
1.3 QUALIFICATIONS
1.4 GUARANTEE

PART 2 PRODUCTS

2.1 NONSHRINK GROUT SCHEDULE
2.2 NONSHRINK GROUT
2.2.1 Category I
2.2.2 Category II
2.2.3 Category III

PART 3 EXECUTION

3.1 NONSHRINK GROUT
3.1.1 General
3.1.2 Form Tie or Through-Bolt Holes
3.1.3 Grouting Machinery Foundations
3.2 FIELD QUALITY CONTROL
3.3 MANUFACTURER'S SERVICES
3.3.1 General
3.3.2 Training
3.4 24-HOUR EVALUATION OF NONSHRINK GROUT TEST FORM
3.5 GROUT TESTING PROCEDURES

-- End of Section Table of Contents --

SECTION 03600

GROUT

PART 1 GENERAL

1.1 REFERENCES

The publications listed below form a part of this specification to the extent referenced. The publications are referred to in the text by basic designation only.

ASTM INTERNATIONAL (ASTM)

ASTM C 230/C 230M	(1998e2) Flow Table for Use in Tests of Hydraulic Cement
ASTM C 939	(1997) Flow of Grout for Preplaced-Aggregate Concrete (Flow Cone Method)
ASTM C 1107	(2002) Packaged Dry, Hydraulic-Cement Grout (Nonshrink)

1.2 SUBMITTALS

Government approval is required for submittals with a "G" designation; submittals not having a "G" designation are for information only. When used, a designation following the "G" designation identifies the office that will review the submittal for the Government. The following shall be submitted in accordance with Section 01330, SUBMITTAL PROCEDURES:

SD-02 Shop Drawings

Manufacturer's Product Data; G, RE

Method for Curing Grout; G, RE

SD-08 Manufacturer's Instructions

Manufacturer's Training Schedule

Certificate of Compliance

Grout free from chlorides and other corrosion-causing chemicals

Nonshrink grout properties of Categories II and III, verifying expansion at 3 or 14 days will not exceed the 28-day expansion and nonshrink properties are not based on gas or gypsum expansion.

Nonshrink Grout Manufacturer's Representative

Provide statement of qualifications.

SD-06 Test Reports

24-hour Evaluation of Nonshrink Grout Test Form

Demonstration Test Report

Field and Laboratory Testing and Report

1.3 QUALIFICATIONS

a. Nonshrink Grout Manufacturer's Representative: Authorized and trained representative of grout manufacturer. Minimum of 1-year experience that has resulted in successful installation of grouts similar to those for this Project.

b. For grout suppliers not listed herein, provide completed 24-hour Evaluation of Nonshrink Grout Test Form, attached at the end of this section. Independent testing laboratory to certify that testing was conducted within last 18 months.

1.4 GUARANTEE

Manufacturer's guarantee shall not contain disclaimer on the product data sheet, grout bag, or container limiting responsibility to only the purchase price of products and materials furnished.

Manufacturer guarantees participation with CONTRACTOR in replacing or repairing grout found defective due to faulty materials, as determined by industry standard test methods.

PART 2 PRODUCTS

2.1 NONSHRINK GROUT SCHEDULE

Furnish nonshrink grout for applications in grout category in the following schedule:

	Temperature Range	Max. Placing Time	
Application	40 to	20 min 100 deg F	Greater than 20 min
Filling tie holes	I	I	I
Blockouts for gate guides	I or II		II
Precast joints	I or II		II
Column baseplates single-story	I or II		II
Machine bases 25 hp or less	II	II	II
Through-bolt openings	II	II	II

Machine bases 26 hp and up	III	III	III
Baseplates and/or soleplates with vibration, thermal movement, etc.	III	III	III

2.2 NONSHRINK GROUT

2.2.1 Category I

a. Nonmetallic and nongas-liberating.

b. Prepackaged natural aggregate grout requiring only the addition of water.

c. Test in accordance with ASTM C 1107:

Flowable consistency 140 percent, five drops in 30 seconds, in accordance with ASTM C 230/C 230M.

Flowable for 15 minutes.

d. Grout shall not bleed at maximum allowed water.

e. Minimum strength of flowable grout, 3,000 psi at 3 days, 5,000 psi at 7 days, and 7,000 psi at 28 days.

2.2.2 Category II

a. Nonmetallic, nongas-liberating.

b. Prepackaged natural aggregate grout requiring only the addition of water.

c. Aggregate shall show no segregation or settlement at fluid consistency at specified times or temperatures.

d. Test in accordance with ASTM C 1107, Grade B:

Fluid consistency 20 to 30 seconds in accordance with ASTM C 939.

Temperatures of 40, 80, and 100 degrees F.

e. 1 hour after mixing, pass fluid grout through flow cone with continuous flow.

f. Minimum strength of fluid grout, 3,500 psi at 1 day, 4,500 psi at 3 days, and 7,500 psi at 28 days.

g. Maintain fluid consistency when mixed in 1 to 9 yard loads in ready-mix truck.

2.2.3 Category III

a. Metallic and nongas-liberating.

b. Prepackaged aggregate grout requiring only the addition of water.

c. Aggregate shall show no segregation or settlement at fluid consistency at specified times or temperatures.

d. Test in accordance with ASTM C 1107, Grade A:

Fluid consistency 20 to 30 seconds in accordance with ASTM C 939.

Temperatures of 40 and 100 degrees F.

e. 1 hour after mixing, pass fluid grout through flow cone with continuous flow.

f. Minimum strength of fluid grout, 4,000 psi at 1 day, 5,000 psi at 3 days, and 9,000 psi at 28 days.

g. Maintain fluid consistency when mixed in 1 to 9 yard loads in ready-mix truck.

PART 3 EXECUTION

3.1 NONSHRINK GROUT

3.1.1 General

Mix, place, and cure nonshrink grout in accordance with grout manufacturer's representative's training instructions and Manufacturer's Product Data.

3.1.2 Form Tie or Through-Bolt Holes

Provide nonshrink grout, Category I and II, fill space with dry pack dense grout hammered in with steel tool and hammer. Through-bolt holes, coordinate dry pack dense grout application with vinyl plug in Section 03101, FORMWORK FOR CONCRETE, and bonding agent in Section 03307, CONCRETE FOR MINOR STRUCTURES.

3.1.3 Grouting Machinery Foundations

a. Block out original concrete or finish off at distance shown below bottom of machinery base with grout. Prepare concrete surface by sandblasting, chipping, or by mechanical means to remove any soft material.

b. Set machinery in position and wedge to elevation with steel wedges, or use cast-in leveling bolts.

c. Form with watertight forms at least 2 inches higher than bottom of plate.

d. Fill space between bottom of machinery base and original concrete in accordance with manufacturer's representative's training

instructions.

3.2 FIELD QUALITY CONTROL

Field and Laboratory Testing and Report:

a. Provide a flow cone and cube molds with restraining plates onsite. Continue tests during Project as demonstrated by grout manufacturer's representative.

b. Perform flow cone and bleed tests, and make three 2-inch by 2-inch cubes for each 25 cubic feet of each type of nonshrink grout used. Use restraining caps for cube molds in accordance with ASTM C 1107.

c. For large grout applications make three additional cubes and one more flow cone test. Include bleed test for each additional 25 cubic feet of nonshrink grout placed.

d. Consistency: As specified in Article NONSHRINK GROUT. Grout with consistencies outside range requirements shall be rejected.

e. Segregation: As specified in Article NONSHRINK GROUT. Grout when aggregate separates shall be rejected.

f. Nonshrink grout cubes shall test equal to or greater than minimum strength specified.

g. Strength Test Failures: Nonshrink grout work failing strength tests shall be removed and replaced.

h. Perform bleeding test to demonstrate grout will not bleed.

i. Store cubes at 70 degrees F.

j. Independent testing laboratory shall prepare, store, cure, and test cubes in accordance with ASTM C 1107.

3.3 MANUFACTURER'S SERVICES

3.3.1 General

a. Coordinate demonstrations, training sessions, and applicable site visits with grout manufacturer's representative.

b. Provide and conduct onsite, demonstration and training sessions for bleed tests, mixing, flow cone measurement, cube testing, application, and curing for each category and type of nonshrink grout.

c. Necessary equipment and materials shall be available for demonstration.

3.3.2 Training

a. Training is required for all Type II and Type III grout installations.

b. Grout manufacturer's representative shall train CONTRACTOR to perform grout work.

c. Manufacturer's Training Schedule: Establish location at site and schedule time for grout manufacturer's demonstration and training session of proposed nonshrink grouts. Mix nonshrink grouts to required consistency, test, place, and cure on actual Project, e.g., baseplates and tie holes to provide actual on-the-job training.

d. Use minimum of five bags for each grout Category II and Category III. Mix grout to fluid consistency and conduct flow cone and two bleed tests, make a minimum of six cubes for testing of two cubes at 1, 3, and 28 days. Use remaining grout for final Work.

e. Training shall include Method for Curing Grout.

f. Mix and demonstrate patching through-bolt holes and blockouts for gate guides, and similar items.

g. Transport test cubes to independent test laboratory and obtain Demonstration Test Report.

Produce Certificate of Compliance for grout installed on project.

3.4 24-HOUR EVALUATION OF NONSHRINK GROUT TEST FORM

_____
(Test Lab Name)

_____
(Address)

_____
(Phone No.)

24-hour Evaluation of Nonshrink Grout Test Form

OBJECTIVE: Define standard set of test procedures for an independent testing laboratory to perform and complete within a 24-hour period.

SCOPE: Utilize test procedures providing 24-hour results to duplicate field grouting demands. Intent of evaluation is establish grout manufacturer's qualifications.

PRIOR TO TEST: Obtain five bags of each type of grout.

1. From intended grout supplier for Project.
2. Five bags of grout shall be of same lot number.

ANSWER THE FOLLOWING QUESTIONS FOR GROUT BEING TESTED FROM LITERATURE, DATA, AND PRINTING ON BAG:

a. Product data and warranty information contained in company literature and data? Yes_____ No_____

b. Literature & bag information meet specified requirements? Yes_____ No_____

c. Manufacturer guarantees grout as specified in Article GUARANTEE? Yes_____ No_____

d. Guarantee extends beyond grout replacement value and allows participation with CONTRACTOR in replacing and repairing defective areas? Yes_____ No_____

e. Water demands and limits printed on bag? Yes_____ No_____

f. Mixing information printed on the bag? Yes_____ No_____

g. Temperature restrictions printed on bag? Yes_____ No_____

*Rejection of a grout will occur if one or more answers are noted NO.

3.5 GROUT TESTING PROCEDURES

GROUT TESTING PROCEDURES

a. Bagged Material:

1. List lot numbers.
2. List expiration date.
3. Weigh bags and record weight.

The Contracting Officer will disqualify grout if bag weights have misstated measure plus or minus 2 pounds by more than one out of five bags. (Accuracy of weights is required to regulate amount of water used in mixing since this will affect properties.)

b. Mixing and Consistency Determination:

1. Mix full bag of grout in 10 gallon pail.
2. Use electric drill with a paddle device to mix grout (jiffy or jiffler type paddle).
3. Use maximum water allowed per water requirements listed in bag instructions.
4. Mix grout to maximum time listed on bag instructions.
5. In accordance with ASTM C 939 (flow cone) determine time of mixed grout through the flow cone. _____ seconds
6. Add water to attain 20 to 30 second flow in accordance with ASTM C 939.
7. Record time of grout thru cone at new water demand. _____ seconds
8. Record total water needed to attain 20 to 30 second flow. _____ pounds
9. Record percent of water. _____ percent

c. When fluid grout is specified and additional water is required beyond grout manufacturer's listed maximum water, ASTM C 1107 will be run at new water per grout ratio to determine whether grout passes using actual water requirements to be fluid. Use new water per grout ratio on remaining tests.

d. Bleed Test:

1. Fill two gallon cans half full of freshly mixed grout at ambient temperatures for each category and at required consistency for each.
2. Place one can of grout in tub of ice water and leave one can at ambient temperature.
3. Cover top of both cans with glass or plastic plate preventing evaporation.
4. Maintain 38 to 42 degrees F temperature with grout placed in ice and maintain ambient temperature for second container for 1 hour.
5. Visual check for bleeding of water at 15-min. intervals for 2 hours.

6. Perform final observation at 24 hours.

If grout bleeds a small amount at temperatures specified, grout will be rejected.

e. Extended Flow Time and Segregation Test (for Category II and III):

1. Divide the remaining grout into two 3 gallon cans. Place the cans into the 40 degree F and 100 degree F containers and leave for 20, 40, and 60 minutes. Every 20 minutes remove and check for segregation or settlement of aggregate. Use a gloved hand to reach to the bottom of the can, if more than 1/4 inch of aggregate has settled to the bottom or aggregate has segregated into clumps reject the grout.
2. Right after the settlement test mix the grout with the drill mixer for 10 seconds. Take a ASTM C 939 flow cone test of grout and record flow time. Maintain this process for 1 hour at ambient temperatures of 40 and 100 degrees F.
   a) 20 min _____, sec. @ 40 degrees F.
   b) 40 min _____, sec. @ 40 degrees F.
   c) 60 min _____, sec. @ 40 degrees F.
   d) 20 min _____, sec. @ 100 degrees F.
   e) 40 min _____, sec. @ 100 degrees F.
   f) 60 min _____, sec. @ 100 degrees F.

All Category II and III grout that will not go through the flow cone with continuous flow after 60 minutes will be disqualified.

_____ _____
Qualified Disqualified

f. 24-hour Strength Test:

1. Using grout left in mixing cans in accordance with ASTM C 1107 for mixing and consistency determination test and for extended time flow test, make minimum of nine cube samples.
2. Store cubes at 70 degrees F for 24 hours.
3. Record average compressive strength of nine cubes at 24 hours. Grout will be disqualified if 24-hour compressive strengths are under 2,500 psi for grouts claiming fluid placement capabilities. Grouts that have not been disqualified after these tests are qualified for use on the Project for the application indicated in Nonshrink Grout Schedule.

_____ _____
Signature of Independent Testing Laboratory Date Test Conducted

-- End of Section --

SECTION TABLE OF CONTENTS

DIVISION 04 - MASONRY

SECTION 04200

MASONRY

PART 1 GENERAL

1.1 REFERENCES
1.2 SUBMITTALS
1.3 DELIVERY, HANDLING, AND STORAGE
1.3.1 Masonry Units
1.3.2 Reinforcement, Anchors, and Ties
1.3.3 Cementitious Materials, Sand and Aggregates
1.4 SPECIAL INSPECTION

PART 2 PRODUCTS

2.1 GENERAL REQUIREMENTS
2.2 CONCRETE MASONRY UNITS (CMU)
2.2.1 Aggregates
2.2.2 Kinds and Shapes
2.3 PREFACED CONCRETE MASONRY UNITS
2.4 MORTAR
2.4.1 Admixtures
2.5 GROUT
2.5.1 Admixtures
2.5.2 Grout Barriers
2.6 JOINT REINFORCEMENT
2.7 REINFORCING STEEL BARS AND RODS
2.8 EXPANSION-JOINT MATERIAL

PART 3 EXECUTION

3.1 ENVIRONMENTAL REQUIREMENTS
3.1.1 Hot Weather Installation
3.2 LAYING MASONRY UNITS
3.2.1 Surface Preparation
3.2.2 Forms and Shores
3.2.3 Concrete Masonry Units
3.2.4 Tolerances
3.2.5 Cutting and Fitting
3.2.6 Jointing
3.2.6.1 Flush Joints
3.2.6.2 Tooled Joints
3.2.6.3 Door and Window Frame Joints
3.2.7 Joint Widths
3.2.7.1 Concrete Masonry Units
3.2.7.2 Prefaced Concrete Masonry Units

3.2.8 Embedded Items
3.2.9 Unfinished Work
3.2.10 Masonry Wall Intersections
3.3 PREFACED CONCRETE MASONRY UNITS
3.4 MORTAR
3.5 REINFORCING STEEL
3.5.1 Positioning Bars
3.5.2 Splices
3.6 JOINT REINFORCEMENT
3.7 PLACING GROUT
3.7.1 Vertical Grout Barriers for Fully Grouted Walls
3.7.2 Horizontal Grout Barriers
3.7.3 Grouting Equipment
3.7.3.1 Grout Pumps
3.7.3.2 Vibrators
3.7.4 Grout Placement
3.7.4.1 Low-Lift Method
3.8 BOND BEAMS
3.9 CONTROL JOINTS
3.10 SHELF ANGLES
3.11 LINTELS
3.11.1 Masonry Lintels
3.12 POINTING AND CLEANING
3.12.1 Concrete Masonry Unit
3.12.2 Prefaced Concrete Masonry Unit Surfaces
3.13 PROTECTION
3.14 TEST REPORTS
3.14.1 Field Testing of Grout

-- End of Section Table of Contents --

SECTION 04200

MASONRY

PART 1 GENERAL

1.1 REFERENCES

The publications listed below form a part of this specification to the extent referenced. The publications are referred to in the text by basic designation only.

ACI INTERNATIONAL (ACI)

ACI SP-66	(1994) ACI Detailing Manual

ASTM INTERNATIONAL (ASTM)

ASTM A 82	(2001) Steel Wire, Plain, for Concrete Reinforcement
ASTM A 153/A 153M	(2001a) Zinc Coating (Hot-Dip) on Iron and Steel Hardware
ASTM C 90	(2002) Loadbearing Concrete Masonry Units
ASTM C 91	(2001) Masonry Cement
ASTM C 270	(2001a) Mortar for Unit Masonry
ASTM C 476	(2001) Grout for Masonry
ASTM C 494/C 494M	(1999ae1) Chemical Admixtures for Concrete
ASTM C 641	(1998el) Staining Materials in Lightweight Concrete Aggregates
ASTM C 744	(1999) Prefaced Concrete and Calcium Silicate Masonry Units
ASTM C 780	(2000) Preconstruction and Construction Evaluation of Mortars for Plain and Reinforced Unit Masonry
ASTM C 1019	(2000b) Sampling and Testing Grout
ASTM C 1072	(2000a) Measurement of Masonry Flexural Bond Strength

INTERNATIONAL CONFERENCE OF BUILDING OFFICIALS (ICBO)

ICBO Building Code (2000) Uniform Building Code (3 Vol.)

1.2 SUBMITTALS

Government approval is required for submittals with a "G" designation; submittals not having a "G" designation are for information only. When used, a designation following the "G" designation identifies the office that will review the submittal for the Government. The following shall be submitted in accordance with Section 01330, SUBMITTAL PROCEDURES:

SD-02 Shop Drawings

Masonry Work; G, RE

Drawings including plans, elevations, and details of wall reinforcement; details of reinforcing bars at corners and wall intersections; offsets; tops, bottoms, and ends of walls; control and expansion joints; and wall openings. Bar splice locations shall be shown. Bent bars shall be identified on a bending diagram and shall be referenced and located on the Drawings. Wall dimensions, bar clearances, and wall openings greater than one masonry unit in area shall be shown. No approval will be given to the shop Drawings until the Contractor certifies that all openings, including those for mechanical and electrical service, are shown. If, during construction, additional masonry openings are required, the approved shop Drawings shall be resubmitted with the additional openings shown along with the proposed changes. Location of these additional openings shall be clearly highlighted. The minimum scale for wall elevations shall be 1/4 inch per foot. Reinforcement bending details shall conform to the requirements of ACI SP-66.

SD-03 Product Data

Prefaced Concrete Masonry Units; G, RE

SD-04 Samples

Concrete Masonry Units (CMU); G, RE
Prefaced Concrete Masonry Units; G, RE

Color samples of three stretcher units and one unit for each type of special shape. Units shall show the full range of color and texture.

Expansion-Joint Material; G, RE

One piece of each type used.

Joint Reinforcement; G, RE

One piece of each type used, including corner and wall intersection pieces, showing at least two cross wires.

SD-06 Test Reports

Field Testing of Grout; G, RE

Test reports from an approved independent laboratory. Test reports on a previously tested material shall be certified as the same as that proposed for use in this project.

Special Inspection; G, RE

Copies of masonry inspector reports.

SD-07 Certificates

Concrete Masonry Units (CMU); G, RE
Prefaced Concrete Masonry Units; G, RE
Reinforcing Steel Bars and Rods; G, RE
Masonry Cement; G, RE
Grout Admixtures; G, RE

Certificates of compliance stating that the materials meet the specified requirements.

1.3 DELIVERY, HANDLING, AND STORAGE

Materials shall be delivered, handled, stored, and protected to avoid chipping, breakage, and contact with soil or contaminating material.

1.3.1 Masonry Units

Concrete masonry units shall be covered or protected from inclement weather. In addition, glass block unitsand prefaced concrete units shall be stored with their finish surfaces covered. Prefabricated lintels shall be marked on top sides to show either the lintel schedule number or the number and size of top and bottom bars.

1.3.2 Reinforcement, Anchors, and Ties

Steel reinforcing bars, coated anchors, ties, and joint reinforcement shall be stored above the ground. Steel reinforcing bars and uncoated ties shall be free of loose mill scale and rust.

1.3.3 Cementitious Materials, Sand and Aggregates

Cementitious and other packaged materials shall be delivered in unopened containers, plainly marked and labeled with manufacturers' names and brands. Cementitious material shall be stored in dry, weathertight enclosures or be completely covered. Cement shall be handled in a manner that will prevent the inclusion of foreign materials and damage by water or dampness. Sand and aggregates shall be stored in a manner to prevent contamination or segregation.

1.4 SPECIAL INSPECTION

A qualified masonry inspector approved by the Contracting Officer shall perform inspection of the masonry work. Minimum qualifications for the masonry inspector shall be 5 years of reinforced masonry inspection experience or acceptance by a State, municipality, or other governmental body having a program of examining and certifying inspectors for reinforced masonry construction. The masonry inspector shall be present during preparation of masonry prisms, sampling and placing of masonry units, placement of reinforcement (including placement of dowels in footings and foundation walls), inspection of grout space, immediately prior to closing of cleanouts, and during grouting operations. The masonry inspector shall assure Contractor compliance with the Drawings and specifications. The masonry inspector shall keep a complete record of all inspections and shall submit daily written reports to the Quality Control Supervisory Representative reporting the quality of masonry construction.

PART 2 PRODUCTS

2.1 GENERAL REQUIREMENTS

The source of materials which will affect the appearance of the finished work shall not be changed after the work has started except with Contracting Officer's approval.

2.2 CONCRETE MASONRY UNITS (CMU)

Hollow and solid concrete masonry units shall conform to ASTM C 90. Cement shall have a low alkali content and be of one brand.

2.2.1 Aggregates

Lightweight aggregates and blends of lightweight and heavier aggregates in proportions used in producing the units, shall comply with the following requirements when tested for stain-producing iron compounds in accordance with ASTM C 641: by visual classification method, the iron stain deposited on the filter paper shall not exceed the "light stain" classification.

2.2.2 Kinds and Shapes

Units shall be modular in size and shall include closer, header, lintel, and bond beam units and special shapes and sizes to complete the work as indicated. Units used in exposed masonry surfaces in any one building shall have a uniform fine to medium texture and a uniform color.

2.3 PREFACED CONCRETE MASONRY UNITS

Prefaced concrete masonry units shall conform to ASTM C 744 using masonry units conforming to ASTM C 90. The facing shall turn over the edges and ends of the unit at least 3/8 inch in the direction of the thickness of the unit to form a lip at least 1/16 inch thick. Variation in color and texture shall not exceed that of the approved samples. All shapes and sizes shall be provided for a complete installation. Bullnose units shall be used along sills and caps and at vertical external corners including door jambs, window jambs, and other such openings. Radius of the bullnose

shall be 1 inch. Base units shall be coved to meet finished floor surfaces where ceramic tile floor occurs.

2.4 MORTAR

Mortar shall be Type S in accordance with the proportion specification of ASTM C 270 except Type S cement-lime mortar proportions shall be 1 part cement, 1/2 part lime and 4-1/2 parts aggregate; Type N cement-lime mortar proportions shall be 1 part cement, 1 part lime and 6 parts aggregate; when masonry cement ASTM C 91 is used the maximum air content shall be limited to 12 percent and performance equal to cement-lime mortar shall be verified. Verification of masonry cement performance shall be based on ASTM C 780 and ASTM C 1072. Mortar for prefaced concrete masonry unit wainscots shall contain aggregates with 100 percent passing the No. 8 sieve and 95 percent passing the No. 16 sieve. Pointing mortar in showers and kitchens shall contain ammonium stearate, or aluminum tri-stearate, or calcium stearate in an amount equal to 3 percent by weight of cement used. Cement shall have a low alkali content and be of one brand. Aggregates shall be from one source.

2.4.1 Admixtures

In cold weather, a non-chloride based accelerating admixture may be used subject to approval. Accelerating admixture shall be non-corrosive, shall contain less than 0.2 percent chlorides, and shall conform to ASTM C 494/C 494M, Type C.

2.5 GROUT

Grout shall conform to ASTM C 476. Cement used in grout shall have a low alkali content. Grout slump shall be between 8 and 10 inches. Grout shall be used subject to the limitations of Table III. Proportions shall not be changed and materials with different physical or chemical characteristics shall not be used in grout for the work unless additional evidence is furnished that the grout meets the specified requirements.

2.5.1 Admixtures

In cold weather, a non-chloride based accelerating admixture may be used subject to approval. Accelerating admixture shall be non-corrosive, shall contain less than 0.2 percent chlorides, and shall conform to ASTM C 494/C 494M, Type C.

2.5.2 Grout Barriers

Grout barriers for vertical cores shall consist of fine mesh wire, fiberglass, or expanded metal.

2.6 JOINT REINFORCEMENT

Joint reinforcement shall be factory fabricated from steel wire conforming to ASTM A 82, welded construction. Wire shall have zinc coating conforming to ASTM A 153/A 153M, Class B-2. All wires shall be a minimum of 9 gauge. Reinforcement shall be ladder type design, having one longitudinal wire in

the mortar bed of each face shell for hollow units and one wire for solid units. Joint reinforcement shall be placed a minimum of 5/8 inch cover from either face. The distance between crosswires shall not exceed 16 inches. Joint reinforcement for straight runs shall be furnished in flat sections not less than 10 feet long. Joint reinforcement shall be provided with factory formed corners and intersections. If approved for use, joint reinforcement may be furnished with adjustable wall tie features.

2.7 REINFORCING STEEL BARS AND RODS

Reinforcing steel bars and rods shall be as specified in Section 03200, CONCRETE REINFORCEMENT.

2.8 EXPANSION-JOINT MATERIAL

Backer rod and sealant shall be adequate to accommodate joint compression equal to 50 percent of the width of the joint. The backer rod shall be compressible rod stock of polyethylene foam, polyurethane foam, butyl rubber foam, or other flexible, nonabsorptive material as recommended by the sealant manufacturer. Sealant shall conform to Section 07920, JOINT SEALANTS.

PART 3 EXECUTION

3.1 ENVIRONMENTAL REQUIREMENTS

3.1.1 Hot Weather Installation

The following precautions shall be taken if masonry is erected when the ambient air temperature is more than 99 degrees F in the shade and the relative humidity is less than 50 percent. All masonry materials shall be shaded from direct sunlight; mortar beds shall be spread no more than 4 feet ahead of masonry; masonry units shall be set within one minute of spreading mortar; and after erection, masonry shall be protected from direct exposure to wind and sun for 48 hours.

3.2 LAYING MASONRY UNITS

All Masonry Work will require the submission and approval of shop Drawings prior to commencing work. Masonry units shall be laid in the indicated bond pattern. Facing courses shall be level with back-up courses, unless the use of adjustable ties has been approved in which case the tolerances shall be plus or minus 1/2 inch. Each unit shall be adjusted to its final position while mortar is still soft and plastic. Units that have been disturbed after the mortar has stiffened shall be removed, cleaned, and relaid with fresh mortar. Air spaces, cavities, chases, expansion joints, and spaces to be grouted shall be kept free from mortar and other debris. Units used in exposed masonry surfaces shall be selected from those having the least amount of chipped edges or other imperfections detracting from the appearance of the finished work. Vertical joints shall be kept plumb. Units being laid and surfaces to receive units shall be free of water film and frost. Solid units shall be laid in a nonfurrowed full bed of mortar. Mortar for veneer wythes shall be beveled and sloped toward the center of the wythe from the cavity side. Units shall be shoved into place so that

the vertical joints are tight. Vertical joints of brick and the vertical face shells of concrete masonry units, except where indicated at control, expansion, and isolation joints, shall be completely filled with mortar. Mortar will be permitted to protrude up to 1/2 inch into the space or cells to be grouted. Means shall be provided to prevent mortar from dropping into the space below. In double wythe construction, the inner wythe may be brought up not more than 16 inches ahead of the outer wythe. Collar joints shall be filled with mortar or grout during the laying of the facing wythe, and filling shall not lag the laying of the facing wythe by more than 8 inches.

3.2.1 Surface Preparation

Surfaces upon which masonry is placed shall be cleaned of laitance, dust, dirt, oil, organic matter, or other foreign materials and shall be slightly roughened to provide a surface texture with a depth of at least 1/8 inch. Sandblasting shall be used, if necessary, to remove laitance from pores and to expose the aggregate.

3.2.2 Forms and Shores

Forms and shores shall be sufficiently rigid to prevent deflections which may result in cracking or other damage to supported masonry and sufficiently tight to prevent leakage of mortar and grout. Supporting forms and shores shall not be removed in less than 10 days.

3.2.3 Concrete Masonry Units

Units in piers, pilasters, columns, starting courses on footings, solid foundation walls, lintels, and beams, and where cells are to be filled with grout shall be full bedded in mortar under both face shells and webs. Other units shall be full bedded under both face shells. Head joints shall be filled solidly with mortar for a distance in from the face of the unit not less than the thickness of the face shell. Foundation walls below grade shall be grouted solid. Jamb units shall be of the shapes and sizes to conform with wall units. Solid units may be incorporated in the masonry work where necessary to fill out at corners, gable slopes, and elsewhere as approved. Double walls shall be stiffened at wall-mounted plumbing fixtures by use of strap anchors, two above each fixture and two below each fixture, located to avoid pipe runs, and extending from center to center of the double wall. Walls and partitions shall be adequately reinforced for support of wall-hung plumbing fixtures when chair carriers are not specified.

3.2.4 Tolerances

Masonry shall be laid plumb, true to line, with courses level. Bond pattern shall be kept plumb throughout. Corners shall be square unless noted otherwise. Except for walls constructed of prefaced concrete masonry units, masonry shall be laid within the following tolerances (plus or minus unless otherwise noted):

TABLE II

TOLERANCES

Variation from the plumb in the lines and surfaces of columns, walls and arises	
In adjacent masonry units	1/8 inch
In 10 feet	1/4 inch
In 20 feet	3/8 inch
In 40 feet or more	1/2 inch

Variations from the plumb for external corners, expansion joints, and other conspicuous lines	
In 20 feet	1/4 inch
In 40 feet or more	1/2 inch

Variations from the level for exposed lintels, sills, parapets, horizontal grooves, and other conspicuous lines	
In 20 feet	1/4 inch
In 40 feet or more	1/2 inch

Variation from level for bed joints and top surfaces of bearing walls	
In 10 feet	1/4 inch
In 40 feet or more	1/2 inch

Variations from horizontal lines	
In 10 feet	1/4 inch
In 20 feet	3/8 inch
In 40 feet or more	1/2 inch

Variations in cross sectional dimensions and in thickness of walls	
Minus	1/4 inch
Plus	1/2 inch

3.2.5 Cutting and Fitting

Full units of the proper size shall be used wherever possible, in lieu of cut units. Cutting and fitting, including that required to accommodate the work of others, shall be done by masonry mechanics using power masonry saws. Concrete masonry units may be wet or dry cut. Wet cut units, before being placed in the work, shall be dried to the same surface-dry appearance

as uncut units being laid in the wall. Cut edges shall be clean, true and sharp. Openings in the masonry shall be made carefully so that wall plates, cover plates or escutcheons required by the installation will completely conceal the openings and will have bottoms parallel with the masonry bed joints. Reinforced masonry lintels shall be provided above openings over 12 inches wide for pipes, ducts, cable trays, and other wall penetrations, unless steel sleeves are used.

3.2.6 Jointing

Joints shall be tooled when the mortar is thumbprint hard. Horizontal joints shall be tooled last. Joints shall be brushed to remove all loose and excess mortar. Mortar joints shall be finished as follows:

3.2.6.1 Flush Joints

Joints in concealed masonry surfaces and joints at electrical outlet boxes in wet areas shall be flush cut. Flush cut joints shall be made by cutting off the mortar flush with the face of the wall. Joints in unparged masonry walls below grade shall be pointed tight. Flush joints for architectural units, such as fluted units, shall completely fill both the head and bed joints.

3.2.6.2 Tooled Joints

Joints in exposed exterior and interior masonry surfaces shall be tooled v-groove. Joints shall be tooled with a jointer slightly larger than the joint width so that complete contact is made along the edges of the unit. Tooling shall be performed so that the mortar is compressed and the joint surface is sealed. Jointer of sufficient length shall be used to obtain a straight and true mortar joint.

3.2.6.3 Door and Window Frame Joints

On the exposed interior side of exterior frames, joints between frames and abutting masonry walls shall be raked to a depth of 3/8 inch. On the exterior side of exterior frames, joints between frames and abutting masonry walls shall be raked to a depth of 3/8 inch.

3.2.7 Joint Widths

Joint widths shall be as follows:

3.2.7.1 Concrete Masonry Units

Concrete masonry units shall have 3/8 inch joints, v-groove horizontal joints and flush vertical joints, except for prefaced concrete masonry units.

3.2.7.2 Prefaced Concrete Masonry Units

Prefaced concrete masonry units shall have a joint width of 3/8 inch wide on unfaced side as noted above and not less than 3/16 inch nor more than 1/4 inch wide on prefaced side.

3.2.8 Embedded Items

Spaces around built-in items shall be filled with mortar. Openings around flush-mount electrical outlet boxes in wet locations shall be pointed with mortar. Anchors, ties, wall plugs, accessories, flashing, pipe sleeves and other items required to be built-in shall be embedded as the masonry work progresses. Anchors, ties and joint reinforcement shall be fully embedded in the mortar. Cells receiving anchor bolts and cells of the first course below bearing plates shall be filled with grout.

3.2.9 Unfinished Work

Unfinished work shall be stepped back for joining with new work. Toothing may be resorted to only when specifically approved. Loose mortar shall be removed and the exposed joints shall be thoroughly cleaned before laying new work.

3.2.10 Masonry Wall Intersections

Each course shall be masonry bonded at corners and elsewhere as shown. Masonry walls shall be anchored or tied together at corners and intersections with bond beam reinforcement and prefabricated corner or tee pieces of joint reinforcement as shown.

3.3 PREFACED CONCRETE MASONRY UNITS

Prefaced concrete masonry units shall be installed as specified for concrete masonry units and as required herein. The facing shall be used for dimensional and plane reference in the installation. Two-faced walls shall consist of two units bonded and tied together as specified for composite walls. Units shall be set level and true so that bases and walls will present true planes and surfaces free of waviness, offset, or other distortion. Joint reinforcing shall be placed not over 16 inches on center vertically.

3.4 MORTAR

Mortar shall be mixed in a mechanically operated mortar mixer for at least 3 minutes, but not more than 5 minutes. Measurement of ingredients for mortar shall be by volume. Ingredients not in containers, such as sand, shall be accurately measured by the use of measuring boxes. Water shall be mixed with the dry ingredients in sufficient amount to provide a workable mixture which will adhere to the vertical surfaces of masonry units. Mortar that has stiffened because of loss of water through evaporation shall be retempered by adding water to restore the proper consistency and workability. Mortar that has reached its initial set or that has not been used within 1-1/2 hours after mixing shall be discarded. A certificate shall be submitted to verify Masonry Cement conforms with all specifications.

3.5 REINFORCING STEEL

Reinforcement shall be cleaned of loose, flaky rust, scale, grease, mortar,

grout, or other coating which might destroy or reduce its bond prior to placing grout. Bars with kinks or bends not shown on the Drawings shall not be used. Reinforcement shall be placed prior to grouting. Unless otherwise indicated, vertical wall reinforcement shall extend to within 2 inches of tops of walls.

3.5.1 Positioning Bars

Vertical bars shall be accurately placed within the cells at the positions indicated on the Drawings. A minimum clearance of 1/2 inch shall be maintained between the bars and masonry units. Minimum clearance between parallel bars shall be one diameter of the reinforcement. Vertical reinforcing may be held in place using bar positioners located near the ends of each bar and at intermediate intervals of not more than 192 diameters of the reinforcement. Column and pilaster ties shall be wired in position around the vertical steel. Ties shall be in contact with the vertical reinforcement and shall not be placed in horizontal bed joints.

3.5.2 Splices

Bars shall be lapped a minimum of 48 diameters of the reinforcement. Welded or mechanical connections shall develop at least 125 percent of the specified yield strength of the reinforcement.

3.6 JOINT REINFORCEMENT

Joint reinforcement shall be installed at 16 inches on center or as indicated. Reinforcement shall be lapped not less than 6 inches. Prefabricated sections shall be installed at corners and wall intersections. The longitudinal wires of joint reinforcement shall be placed to provide not less than 5/8 inch cover to either face of the unit.

3.7 PLACING GROUT

Certificates shall be submitted to verify that all Grout Admixtures conform with all specifications. Cells containing reinforcing bars shall be filled with grout. Hollow masonry units in walls or partitions supporting plumbing, heating, or other mechanical fixtures, voids at door and window jambs, and other indicated spaces shall be filled solid with grout. Cells under lintel bearings on each side of openings shall be filled solid with grout for full height of openings. Walls below grade, lintels, and bond beams shall be filled solid with grout. Units other than open end units may require grouting each course to preclude voids in the units. Grout not in place within 1-1/2 hours after water is first added to the batch shall be discarded. Sufficient time shall be allowed between grout lifts to preclude displacement or cracking of face shells of masonry units. If blowouts, flowouts, misalignment, or cracking of face shells should occur during construction, the wall shall be torn down and rebuilt.

3.7.1 Vertical Grout Barriers for Fully Grouted Walls

Grout barriers shall be provided not more than 30 feet apart, or as required, to limit the horizontal flow of grout for each pour.

3.7.2 Horizontal Grout Barriers

Grout barriers shall be embedded in mortar below cells of hollow units receiving grout.

3.7.3 Grouting Equipment

3.7.3.1 Grout Pumps

Pumping through aluminum tubes will not be permitted. Pumps shall be operated to produce a continuous stream of grout without air pockets, segregation, or contamination. Upon completion of each day's pumping, waste materials and debris shall be removed from the equipment, and disposed of outside the masonry.

3.7.3.2 Vibrators

Internal vibrators shall maintain a speed of not less than 5,000 impulses per minute when submerged in the grout. At least one spare vibrator shall be maintained at the site at all times. Vibrators shall be applied at uniformly spaced points not further apart than the visible effectiveness of the machine. Duration of vibration shall be limited to time necessary to produce satisfactory consolidation without causing segregation.

3.7.4 Grout Placement

Masonry shall be laid to the top of a pour before placing grout. Grout shall not be placed in hollow unit masonry until mortar joints have set for at least 24 hours. Grout shall be placed using a hand bucket, concrete hopper, or grout pump to completely fill the grout spaces without segregation of the aggregates. Vibrators shall not be inserted into lower pours that are in a semi-solidified state. The height of grout pours and type of grout used shall be limited by the dimensions of grout spaces as indicated in Table III. Low-lift grout methods may be used on pours up to and including 5 feet in height. High-lift grout methods shall be used on pours exceeding 5 feet in height.

3.7.4.1 Low-Lift Method

Grout shall be placed at a rate that will not cause displacement of the masonry due to hydrostatic pressure of the grout. Mortar protruding more than 1/2 inch into the grout space shall be removed before beginning the grouting operation. Grout pours 12 inches or less in height shall be consolidated by mechanical vibration or by puddling. Grout pours over 12 inches in height shall be consolidated by mechanical vibration and reconsolidated by mechanical vibration after initial water loss and settlement has occurred. Vibrators shall not be inserted into lower pours that are in a semi-solidified state. Low-lift grout shall be used subject to the limitations of Table III.

TABLE III

POUR HEIGHT AND TYPE OF GROUT FOR VARIOUS GROUT SPACE DIMENSIONS

Maximum Grout Pour Height (feet) (4)	Grout Type	Grouting Procedure	Minimum Dimensions of the Total Clear Areas Within Grout Spaces and Cells (in.) (1,2) Multiwythe Masonry (3)	Hollow-unit Masonry
1	Coarse	Low Lift	1-1/2	1-1/2 x 3
5	Coarse	Low Lift	2	2-1/2 x 3

Notes:

(1) The actual grout space or cell dimension must be larger than the sum of the following items:
a) The required minimum dimensions of total clear areas given in the table above;
b) The width of any mortar projections within the space;
c) The horizontal projections of the diameters of the horizontal reinforcing bars within a cross section of the grout space or cell.

(2) The minimum dimensions of the total clear areas shall be made up of one or more open areas, with at least one area being 3/4 inch or greater in width.

(4) Where only cells of hollow masonry units containing reinforcement are grouted, the maximum height of the pour shall not exceed the distance between horizontal bond beams.

3.8 BOND BEAMS

Bond beams shall be filled with grout and reinforced as indicated on the Drawings. Grout barriers shall be installed under bond beam units to retain the grout as required. Reinforcement shall be continuous, including around corners, except through control joints or expansion joints, unless otherwise indicated on the Drawings. Where splices are required for continuity, reinforcement shall be lapped 48 bar diameters. A minimum clearance of 1/2 inch shall be maintained between reinforcement and interior faces of units.

3.9 CONTROL JOINTS

Control joints shall be provided as indicated and shall be constructed by using mortar to fill the head joint in accordance with the details shown on the Drawings. Sash jamb units shall have a 3/4 by 3/4 inch groove near the center at end of each unit. The vertical mortar joint at control joint locations shall be continuous, including through all bond beams. This shall be accomplished by utilizing half blocks in alternating courses on each side of the joint. The control joint key shall be interrupted in courses containing continuous bond beam steel. In single wythe exterior

masonry walls, the exterior control joints shall be raked to a depth of 3/4 inch; backer rod and sealant shall be installed in accordance with Section 07920 JOINT SEALANTS. Exposed interior control joints shall be raked to a depth of 1/4 inch. Concealed control joints shall be flush cut.

3.10 SHELF ANGLES

Shelf angles shall be adjusted as required to keep the masonry level and at the proper elevation. Shelf angles shall be galvanized. Shelf angles shall be provided in sections not longer than 10 feet and installed with a 1/4 inch gap between sections. Shelf angles shall be mitered and welded at building corners with each angle not shorter than 4 feet, unless limited by wall configuration.

3.11 LINTELS

3.11.1 Masonry Lintels

Masonry lintels shall be constructed with lintel units filled solid with grout in all courses and reinforced with a minimum of two No. 4 bars in the bottom course unless otherwise indicated on the Drawings. Lintel reinforcement shall extend beyond each side of masonry opening 40 bar diameters or 24 inches, whichever is greater. Reinforcing bars shall be supported in place prior to grouting and shall be located 1/2 inch above the bottom inside surface of the lintel unit.

3.12 POINTING AND CLEANING

After mortar joints have attained their initial set, but prior to hardening, mortar and grout daubs or splashings shall be completely removed from masonry-unit surfaces that will be exposed or painted. Before completion of the work, defects in joints of masonry to be exposed or painted shall be raked out as necessary, filled with mortar, and tooled to match existing joints. Immediately after grout work is completed, scum and stains which have percolated through the masonry work shall be removed using a high pressure stream of water and a stiff bristled brush. Masonry surfaces shall not be cleaned, other than removing excess surface mortar, until mortar in joints has hardened. Masonry surfaces shall be left clean, free of mortar daubs, dirt, stain, and discoloration, including scum from cleaning operations, and with tight mortar joints throughout. Metal tools and metal brushes shall not be used for cleaning.

3.12.1 Concrete Masonry Unit

Exposed concrete masonry unit shall be dry-brushed at the end of each day's work and after any required pointing, using stiff-fiber bristled brushes.

3.12.2 Prefaced Concrete Masonry Unit Surfaces

Prefaced concrete masonry unit surfaces shall be cleaned with soap powder and clean water applied with stiff fiber brushes. Excess mortar shall be removed with wood paddles. Metal cleaning tools, metal brushes, abrasive powders, and acid solutions shall not be used. At the completion of cleaning operations, the surfaces shall be rinsed with clean water. In

areas of traffic within the building, a barricade of wood supported by framing lumber shall be erected to protect the units. In other areas, a heavy kraft-type building paper shall be taped over the units until final acceptance. Exposed faces of single-faced units at exterior of building shall receive medium sandblast finish to expose aggregates while interior face is protected.

3.13 PROTECTION

Facing materials shall be protected against staining. Top of walls shall be covered with nonstaining waterproof covering or membrane when work is not in progress. Covering of the top of the unfinished walls shall continue until the wall is waterproofed with a complete roof or parapet system. Covering shall extend a minimum of 2 feet down on each side of the wall and shall be held securely in place. Before starting or resuming, top surface of masonry in place shall be cleaned of loose mortar and foreign material.

3.14 TEST REPORTS

3.14.1 Field Testing of Grout

Field sampling and testing of grout shall be in accordance with the applicable provisions of ASTM C 1019. A minimum of three specimens of grout per day shall be sampled and tested. Each specimen shall have a minimum ultimate compressive strength of 2000 psi at 28 days.

Masonary unit and grout testing shall be in conformance with ICBO Building Code, "Unit Strength Method". Other UBC Test methods may be submitted as an alternative.

-- End of Section --

SECTION TABLE OF CONTENTS

DIVISION 05 - METALS

SECTION 05120

STRUCTURAL STEEL

PART 1 GENERAL

1.1 REFERENCES
1.2 GENERAL REQUIREMENTS
1.3 SUBMITTALS
1.4 STORAGE
1.5 WELDING INSPECTOR

PART 2 PRODUCTS

2.1 STRUCTURAL STEEL
2.1.1 Carbon Grade Steel
2.1.2 Structural Shapes for Use in Building Framing
2.2 STRUCTURAL TUBING
2.3 STEEL PIPE
2.4 HIGH STRENGTH BOLTS AND NUTS
2.5 CARBON STEEL BOLTS AND NUTS
2.6 NUTS DIMENSIONAL STYLE
2.7 WASHERS
2.8 PAINT

PART 3 EXECUTION

3.1 FABRICATION
3.2 ERECTION
3.2.1 Structural Connections
3.2.2 Base Plates and Bearing Plates
3.2.3 Field Priming
3.3 WELDING

-- End of Section Table of Contents --

SECTION 05120

STRUCTURAL STEEL

PART 1 GENERAL

1.1 REFERENCES

The publications listed below form a part of this specification to the extent referenced. The publications are referred to in the text by basic designation only.

AMERICAN INSTITUTE OF STEEL CONSTRUCTION (AISC)

AISC ASD Manual	(1989) Manual of Steel Construction Allowable Stress Design
AISC FCD	(1995a) Quality Certification Program
AISC LRFD Vol II	(1995) Manual of Steel Construction Load & Resistance Factor Design, Vol II: Structural Members, Specifications & Codes

ASTM INTERNATIONAL (ASTM)

ASTM A 6/A 6M	(2001b) General Requirements for Rolled Structural Steel Bars, Plates, Shapes, and Sheet Piling
ASTM A 36/A 36M	(2001) Carbon Structural Steel
ASTM A 53/A 53M	(2001) Pipe, Steel, Black and Hot-Dipped, Zinc-Coated, Welded and Seamless
ASTM A 307	(2000) Carbon Steel Bolts and Studs, 60 000 PSI Tensile Strength
ASTM A 500	(2001a) Cold-Formed Welded and Seamless Carbon Steel Structural Tubing in Rounds and Shapes
ASTM A 563	(2000) Carbon and Alloy Steel Nuts
ASTM A 992/A 992M	(2002) Steel for Structural Shapes For Use in Building Framing
ASTM F 844	(2000) Washers, Steel, Plain (Flat), Unhardened for General Use

AMERICAN WELDING SOCIETY (AWS)

AWS A2.4	(1998) Standard Symbols for Welding, Brazing and Nondestructive Examination
AWS D1.1	(2000) Structural Welding Code - Steel

ASME INTERNATIONAL (ASME)

ASME B46.1	(1995) Surface Texture (Surface Roughness, Waviness, and Lay)

THE SOCIETY FOR PROTECTIVE COATINGS (SSPC)

SSPC Paint 25	(1997; R 2000) Zinc Oxide, Alkyd, Linseed Oil Primer for Use Over Hand Cleaned Steel, Type I and Type II

1.2 GENERAL REQUIREMENTS

Structural steel fabrication and erection shall be performed by an organization experienced in structural steel work of equivalent magnitude. The Contractor shall be responsible for correctness of detailing, fabrication, and for the correct fitting of structural members. Connections, for any part of the structure not shown on the contract Drawings, shall be considered simple shear connections and shall be designed and detailed in accordance with pertinent provisions of AISC ASD Manual. Substitution of sections or modification of connection details will not be accepted unless approved by the Contracting Officer. AISC ASD Manual and AISC ASD Manual AISC LRFD Vol II shall govern the work. Welding shall be in accordance with AWS D1.1; except that welding for critical applications shall be in accordance with paragraph WELDING. High-strength bolting shall be in accordance with AISC ASD Manual.

1.3 SUBMITTALS

Government approval is required for submittals with a "G" designation; submittals not having a "G" designation are for information only. When used, a designation following the "G" designation identifies the office that will review the submittal for the Government. The following shall be submitted in accordance with Section 01330, SUBMITTAL PROCEDURES:

SD-02 Shop Drawings

Structural Steel System; G, RE
Structural Connections; G, RE

Shop and erection details including members (with their connections) not shown on the contract Drawings. Welds shall be indicated by standard welding symbols in accordance with AWS A2.4.

SD-03 Product Data

Erection; G, RE

Prior to erection, erection plan of the structural steel framing describing all necessary temporary supports, including the sequence of installation and removal.

Welding; G, RE

WPS prequalified.

SD-04 Samples

Carbon Steel Bolts and Nuts; G, RE
Nuts Dimensional Style; G, RE
Washers;

Random samples of bolts, nuts, and washers as delivered to the job site if requested, taken in the presence of the Contracting Officer and provided to the Contracting Officer for testing to establish compliance with specified requirements.

SD-07 Certificates

Mill Test Reports; G, RE

Certified copies of mill test reports for structural steel, structural bolts, nuts, washers and other related structural steel items, including attesting that the structural steel furnished contains no less than 25 percent recycled scrap steel and meets the requirements specified, prior to the installation.

Welder Qualifications; G, RE

Certified copies of welder qualifications test records showing qualification in accordance with AWS D1.1.

Welding Inspector; G, RE

Welding Inspector qualifications.

Fabrication; G, RE

A copy of the AISC certificate indicating that the fabrication plant meets the specified structural steelwork category.

1.4 STORAGE

Material shall be stored out of contact with the ground in such manner and location as will minimize deterioration.

1.5 WELDING INSPECTOR

Welding Inspector qualifications shall be in accordance with AWS D1.1

PART 2 PRODUCTS

2.1 STRUCTURAL STEEL

Submit certified copies of Mill Test Reports for structural steel bolts, nuts, washer and other related structural steel items.

2.1.1 Carbon Grade Steel

Carbon grade steel shall conform to ASTM A 36/A 36M .

2.1.2 Structural Shapes for Use in Building Framing

Wide flange shapes in accordance with ASTM A 992/A 992M shall be used where indicated on the Drawings.

2.2 STRUCTURAL TUBING

Structural tubing shall conform to ASTM A 500, Grade B or C.

2.3 STEEL PIPE

Steel pipe shall conform to ASTM A 53/A 53M, , Grade B.

2.4 HIGH STRENGTH BOLTS AND NUTS

High strength bolts shall conform to ASTM A 307.

2.5 CARBON STEEL BOLTS AND NUTS

Carbon steel bolts shall conform to ASTM A 307, Grade A with carbon steel nuts conforming to ASTM A 563, Grade A.

2.6 NUTS DIMENSIONAL STYLE

Carbon steel nuts shall be Hex style when used with ASTM A 307 bolts.

2.7 WASHERS

Plain washers shall conform to ASTM F 844.

2.8 PAINT

Paint shall conform to SSPC Paint 25.

PART 3 EXECUTION

3.1 FABRICATION

Fabrication shall be in accordance with the applicable provisions of AISC ASD Manual. Fabrication and assembly shall be done in the shop to the greatest extent possible. Compression joints depending on contact bearing shall have a surface roughness not in excess of 500 micro inches as determined by ASME B46.1, and ends shall be square within the tolerances for milled ends specified in ASTM A 6/A 6M. Structural steelwork, except surfaces of steel to be encased in concrete, surfaces to be field welded,

surfaces to be fireproofed, and contact surfaces of friction-type high-strength bolted connections shall be prepared for painting in accordance with endorsement "P" of AISC FCD and primed with the specified paint.

3.2 ERECTION

Erection of Structural Steel System shall be in accordance with the applicable provisions of AISC ASD Manual. Erection plan shall be reviewed, stamped and sealed by a structural engineer licensed by the state in which the project is located.

3.2.1 Structural Connections

Anchor bolts and other connections between the structural steel and foundations shall be provided and shall be properly located and built into connecting work. Field welded structural connections shall be completed before load is applied.

3.2.2 Base Plates and Bearing Plates

Column base plates for columns and bearing plates for beams, girders, and similar members shall be provided. Base plates and bearing plates shall be provided with full bearing after the supported members have been plumbed and properly positioned, but prior to placing superimposed loads. Separate setting plates under column base plates will not be permitted. The area under the plate shall be damp-packed solidly with bedding mortar, except where nonshrink grout is indicated on the Drawings. Bedding mortar and grout shall be as specified in Section 04200, MASONRY.

3.2.3 Field Priming

After erection, the field bolt heads and nuts, field welds, and any abrasions in the shop coat shall be cleaned and primed with paint of the same quality as that used for the shop coat.

3.3 WELDING

The contractor shall develop and submit the Welding Procedure Specifications (WPS) for all welding, including welding done using prequalified procedures. Prequalified procedures may be submitted for information only; however, procedures that are not prequalified shall be submitted for approval. Submit certified copies of all welder qualifications test records showing qualification in accordance with AWS D1.1

-- End of Section --

SECTION TABLE OF CONTENTS

DIVISION 05 - METALS

SECTION 05500

MISCELLANEOUS METAL

PART 1 GENERAL

1.1 REFERENCES
1.2 SUBMITTALS
1.3 GENERAL REQUIREMENTS
1.4 DEFINITIONS
1.4.1 Submerged
1.4.2 Exterior Area
1.4.3 Interior Wet Area
1.4.4 Interior Dry Area
1.5 DISSIMILAR MATERIALS
1.6 WORKMANSHIP
1.7 ANCHORAGE
1.8 ALUMINUM FINISHES
1.9 SHOP PAINTING

PART 2 PRODUCTS

2.1 ACCESS HATCHES
2.1.1 Access Hatch Hardware
2.2 ANCHOR BOLTS AND ANCHOR BOLT SLEEVES
2.2.1 Cast-in-Place Anchor Bolts
2.2.2 Plastic Anchor Bolt Sleeves
2.2.3 Fabricated Steel Anchor Bolt Sleeve
2.3 CONCRETE AND MASONRY DRILLED ANCHORS
2.3.1 Expansion Anchors
2.3.2 Adhesive Anchors
2.3.2.1 Threaded Rod
2.3.2.2 Adhesive
2.3.2.3 Packaging and Storage
2.3.3 Adhesive Threaded Inserts
2.4 HANDRAILS
2.4.1 Steel Handrails, Including Carbon Steel Inserts
2.5 MISCELLANEOUS
2.6 PARTITIONS
2.7 SHELVING
2.8 STEEL DOOR FRAMES

PART 3 EXECUTION

3.1 GENERAL INSTALLATION REQUIREMENTS
3.2 ACCESS HATCHES
3.3 CAST-IN-PLACE ANCHOR BOLTS

3.4 CONCRETE AND MASONRY DRILLED ANCHORS
3.5 ATTACHMENT OF HANDRAILS
3.5.1 Installation of Steel Handrails
3.6 PARTITION POSTS AND OPENINGS
3.7 DOOR FRAMES
3.8 FASTENER SCHEDULE

-- End of Section Table of Contents --

SECTION 05500

MISCELLANEOUS METAL

PART 1 GENERAL

1.1 REFERENCES

The publications listed below form a part of this specification to the extent referenced. The publications are referred to in the text by basic designation only.

ALUMINUM ASSOCIATION (AA)

AA DAF-45	(1997) Designation System for Aluminum Finishes

AMERICAN NATIONAL STANDARDS INSTITUTE (ANSI)

ANSI MH28.1	(1997) Design, Testing, Utilization, and Application of Industrial Grade Steel Shelving

ASTM INTERNATIONAL (ASTM)

ASTM A 36/A 36M	(2001) Carbon Structural Steel
ASTM A 53/A 53M	(2001) Pipe, Steel, Black and Hot-Dipped, Zinc-Coated, Welded and Seamless
ASTM A 123/A 123M	(2001a) Zinc (Hot-Dip Galvanized) Coatings on Iron and Steel Products
ASTM A 653/A 653M	(2001a) Steel Sheet, Zinc-Coated (Galvanized) or Zinc-Iron Alloy-Coated (Galvannealed) by the Hot-Dip Process
ASTM A 924/A 924M	(1999) General Requirements for Steel Sheet, Metallic-Coated by the Hot-Dip Process
ASTM F 593	(2001) Stainless Steel Bolts, Hex Cap Screws, and Studs
ASTM F 1554	(1999) Anchor Bolts, Steel, 36, 55, and 105-ksi Yield Strength

AMERICAN WELDING SOCIETY (AWS)

AWS D1.1	(2000) Structural Welding Code - Steel

U.S. GENERAL SERVICES ADMINISTRATION (GSA)

CID A-A-344 (Rev B) Lacquer (Clear Gloss)

1.2 SUBMITTALS

Government approval is required for submittals with a "G" designation; submittals not having a "G" designation are for information only. When used, a designation following the "G" designation identifies the office that will review the submittal for the Government. The following shall be submitted in accordance with Section 01330 SUBMITTAL PROCEDURES:

SD-02 Shop Drawings

Miscellaneous Metal Items; G, RE

Detail Drawings indicating material thickness, type, grade, and class; dimensions; and construction details. Drawings shall include catalog cuts, erection details, manufacturer's descriptive data and installation instructions, and templates. Detail Drawings for the following items: Handrails, Guardrails, Restroom Gates, Site Entry Gates, Site Fencing, Toilet Paper Dispensers and Toilet Partitions.

SD-04 Samples

Miscellaneous Metal Items; G, RE

Samples of the following items: Square Metal Screening and Wire Mesh at Gates. Samples shall be full size, taken from manufacturer's stock, and shall be complete as required for installation in the structure. Samples may be installed in the work, provided each sample is clearly identified and its location recorded.

1.3 GENERAL REQUIREMENTS

The Contractor shall verify all measurements and shall take all field measurements necessary before fabrication. Welding to or on structural steel shall be in accordance with AWS D1.1. Items specified to be galvanized, when practicable and not indicated otherwise, shall be hot-dip galvanized after fabrication. Galvanizing shall be in accordance with ASTM A 123/A 123M, ASTM A 653/A 653M, or ASTM A 924/A 924M, as applicable. Exposed fastenings shall be compatible materials, shall generally match in color and finish, and shall harmonize with the material to which fastenings are applied. Materials and parts necessary to complete each item, even though such work is not definitely shown or specified, shall be included. Poor matching of holes for fasteners shall be cause for rejection. Fastenings shall be concealed where practicable. Thickness of metal and details of assembly and supports shall provide strength and stiffness. Joints exposed to the weather shall be formed to exclude water.

1.4 DEFINITIONS

1.4.1 Submerged

Location at or below top of wall of open water-holding structure, such as a basin or channel, or wall, ceiling or floor surface inside a covered water-holding structure, or exterior belowgrade wall or roof surface of water-holding structure, open or covered.

1.4.2 Exterior Area

Location not protected from the weather by a building or other enclosed structure.

1.4.3 Interior Wet Area

Location inside building or structure where floor is sloped to floor drains or gutters and is subject to liquid spills or washdown, or where wall, floor, or roof slab is common to a water-holding or earth-retaining structure.

1.4.4 Interior Dry Area

Location inside building or structure where floor is not subject to liquid spills or washdown, nor where wall or roof slab is common to a water-holding or earth-retaining structure.

1.5 DISSIMILAR MATERIALS

Where dissimilar metals are in contact, or where aluminum is in contact with concrete, mortar, masonry, wet or pressure-treated wood, or absorptive materials subject to wetting, the surfaces shall be protected with a coat of bituminous paint or asphalt varnish.

1.6 WORKMANSHIP

Miscellaneous metalwork shall be well formed to shape and size, with sharp lines and angles and true curves. Drilling and punching shall produce clean true lines and surfaces. Welding shall be continuous along the entire area of contact except where tack welding is permitted. Exposed connections of work in place shall not be tack welded. Exposed welds shall be ground smooth. Exposed surfaces of work in place shall have a smooth finish, and unless otherwise approved, exposed riveting shall be flush. Where tight fits are required, joints shall be milled. Corner joints shall be coped or mitered, well formed, and in true alignment. Work shall be accurately set to established lines and elevations and securely fastened in place. Installation shall be in accordance with manufacturer's installation instructions and approved Drawings, cuts, and details.

1.7 ANCHORAGE

Anchorage shall be provided where necessary for fastening miscellaneous metal items securely in place. Anchorage not otherwise specified or indicated shall include slotted inserts made to engage with the anchors, expansion shields, and power-driven fasteners when approved for concrete;

toggle bolts and through bolts for masonry; machine and carriage bolts for steel; and lag bolts and screws for wood.

1.8 ALUMINUM FINISHES

Unless otherwise specified, aluminum items shall have standard mill finish. The thickness of the coating shall be not less than that specified for protective and decorative type finishes for items used in interior locations or architectural Class I type finish for items used in exterior locations in AA DAF-45. Items to be anodized shall receive a polished satin finish. Aluminum surfaces to be in contact with plaster or concrete during construction shall be protected with a field coat conforming to CID A-A-344.

1.9 SHOP PAINTING

Surfaces of ferrous metal except galvanized surfaces, shall be cleaned and shop coated with the manufacturer's standard protective coating unless otherwise specified. Surfaces of items to be embedded in concrete shall not be painted. Items to be finish painted shall be prepared according to manufacturer's recommendations or as specified.

PART 2 PRODUCTS

2.1 ACCESS HATCHES

Hatches shall be flush type unless otherwise indicated. Frames for access doors shall be fabricated of not lighter than 1/4 inch thick extruded aluminum angle frame with concrete anchors and integral neoprene gasket strip. Door leaf(s) shall be manufactured of 1/4 inch thick aluminum diamond pattern plate. Provide stainless steel safety chain and attachments for end of double-leaf door assembly when open. Access hatches shall be hinged to frame and provided with a flush face, screw driver operated latch. Exposed metal surfaces shall have a baked enamel finish.

2.1.1 Access Hatch Hardware

Hinges shall be heavy-duty brass or stainless steel with stainless steel pins, through-bolted to cover plate with tamper-proof stainless steel bolts flush with top of cover and to outside leg of channel frame with stainless steel bolts and locknuts. Lifting mechanism shall be a stainless steel compression lift with springs enclosed in telescoping vertical housing or stainless steel torsion lift springs. Hold-Open arm shall lock automatically in open position and disengage with slight pull on vinyl grip with one hand. Door can be easily closed with one hand by pulling forward and down on vinyl grip. Stainless steel snap lock shall be mounted on bottom of door leaf with removable topside key wrench and inside fixed lever handle. The outside threaded plug is flush with outside surface with key wrench removed. Aluminum shall be mill finished with protective coating applied to surfaces to be contact with concrete, as specified in Section 09900 PAINTING.

2.2 ANCHOR BOLTS AND ANCHOR BOLT SLEEVES

2.2.1 Cast-in-Place Anchor Bolts

Cast-in-Place anchor bolts shall be headed type unless otherwise shown on the Drawings in accordance with ASTM F 1554, Grade 55. Material type and protective coating as indicated in Fastener Schedule at end of section.

2.2.2 Plastic Anchor Bolt Sleeves

Plastic anchor bolt sleeves shall be of single unit construction with corrugated sleeve manufactured of high density polyethylene. Top of sleeve shall be self-threading to provide adjustment of threaded anchor bolt projection in accordance with ASTM A 36/A 36M.

2.2.3 Fabricated Steel Anchor Bolt Sleeve

Fabricated steel anchor bolt sleeve shall conform to ASTM A 36/A 36M.

2.3 CONCRETE AND MASONRY DRILLED ANCHORS

Concrete and masonry drilled anchors shall be ASTM F 593, stainless, hot-dip galvanized, or zinc-plated steel, as shown in FASTENER SCHEDULE at end of this section with a current evaluation and acceptance reports by ICBO or other similar code organization. Anchor bolts shall be acceptable for use in potable water structures by EPA and local health agencies or NSF.

2.3.1 Expansion Anchors

Expansion anchors shall be self-drilling, snap-off or flush type, zinc-plated. Nondrilling Anchors shall be flush type for use with zinc-plated or stainless steel bolt, or stud type with projecting threaded stud.

2.3.2 Adhesive Anchors

2.3.2.1 Threaded Rod

ASTM F 593, stainless steel threaded rod, diameter as shown on the Drawings clean and free of grease, oil, or other deleterious material. Length as required to provide minimum depth of embedment.

2.3.2.2 Adhesive

Adhesive shall be two-component, designed to be used in adverse freeze/thaw environments, with gray color after mixing. Cure temperature, pot life, and workability shall be compatible for intended use and environmental conditions. Product shall be non-sag, with selected viscosity base on installation temperature and overhead application where applicable.

2.3.2.3 Packaging and Storage

Disposable, self-contained cartridge system capable of dispensing both components in the proper mixing ratio and fitting into a manually or pneumatically operated caulking gun. Store adhesive cartridges on pallets or shelving in covered storage area, in accordance with manufacturer's

written instructions. Cartridge markings shall include manufacturer's name, product name, material type, batch or serial number, and adhesive expiration date. Dispose of cartridges if shelf life has expired.

2.3.3 Adhesive Threaded Inserts

Stainless steel, internally threaded inserts.

2.4 HANDRAILS

Handrails shall be designed to resist a concentrated load of 200 pounds in any direction at any point of the top of the rail or 20 pounds per foot applied horizontally to top of the rail, whichever is more severe.

2.4.1 Steel Handrails, Including Carbon Steel Inserts

Steel handrails, including inserts in concrete, shall be steel pipe conforming to ASTM A 53/A 53M. Steel railings shall be 1-1/2 inch nominal size. Railings shall be shop painted. Pipe collars shall be hot-dip galvanized steel.

a. Joint posts, rail, and corners shall be fabricated by one of the following methods:

   1. Flush type rail fittings of commercial standard, welded and ground smooth with railing splice locks secured with 3/8 inch hexagonal recessed-head setscrews.
   2. Mitered and welded joints by fitting post to top rail and intermediate rail to post, mitering corners, groove welding joints, and grinding smooth. Railing splices shall be butted and reinforced by a tight fitting interior sleeve not less than 6 inches long.
   3. Railings may be bent at corners in lieu of jointing, provided bends are made in suitable jigs and the pipe is not crushed.

b. Removable sections, toe-boards, and brackets shall be provided as indicated.

2.5 MISCELLANEOUS

Miscellaneous plates and shapes for items that do not form a part of the structural steel framework, such as lintels, sill angles, miscellaneous mountings, and frames, shall be provided to complete the work.

2.6 PARTITIONS

Partitions shall be constructed as indicated on the Drawings. Steel frames, posts, and intermediate members shall be of the sizes and shapes indicated.

2.7 SHELVING

Shelving shall conform to ANSI MH28.1 and shall be bolted and capable of resisting a uniform load of 25 lbs per foot. Minimum dimensions and number

of shelves shall be as indicated.

2.8 STEEL DOOR FRAMES

Steel door frames built from structural shapes shall be neatly mitered and securely welded at the corners with all welds ground smooth. Jambs shall be provided with 2 by 1/4 by 12 inch bent, adjustable metal anchors spaced not over 2 feet 6 inches on centers. Provision shall be made to stiffen the top member for all spans over 3 feet. Continuous door stops shall be made of 1-1/2 by 5/8 inch bars.

PART 3 EXECUTION

3.1 GENERAL INSTALLATION REQUIREMENTS

All items shall be installed at the locations shown and according to the manufacturer's recommendations. Items listed below require additional procedures as specified.

3.2 ACCESS HATCHES

Install access hatches in accordance with manufacturer's instructions. Accurately position prior to placing concrete, such that covers are flush with floor surface. Protect from damage resulting from concrete placement. Thoroughly clean exposed surfaces of concrete spillage to obtain a clean, uniform appearance.

3.3 CAST-IN-PLACE ANCHOR BOLTS

Accurately locate and hold anchor bolts in place with templates at the time concrete is placed. Use anchor bolt sleeves for location adjustment and provide two nuts and one washer per bolt of same material as bolt. Minimum bolt size shall be 1/2 inch diameter by 12 inches long, unless otherwise shown on the drawings.

3.4 CONCRETE AND MASONRY DRILLED ANCHORS

Begin installation only after concrete or masonry to receive anchors has attained design strength. Install in accordance with manufacturer's instructions. Provide minimum embedment, edge distance, and spacing as follows, unless indicated otherwise by anchor manufacturer's instructions or shown otherwise on Drawings:

Anchor Types in Bolt Diameters

Anchor Type	Min. Embedment	Min. Edge Dist.	Min. Spacing
Wedge	9	6	12
Expansion and Sleeve	4	6	12
Adhesive	9	9	13.5

Use only drill type and bit type and diameter recommended by anchor manufacturer. Clean hole of debris and dust with brush and compressed air. For undercut anchors, use special undercutting drill bit and rotary hammer drill and apply final torque as recommended by anchor manufacturer. When embedded steel or rebar is encountered in the drill path, slant drill to clear obstruction. If drill must be slanted more than 10 degrees to clear obstruction, notify the Contracting Officer for direction on how to proceed.

Adhesive Anchors: Do not install adhesive anchors when temperature of concrete is below 40 degrees F or above 100 degrees F. Remove any standing water from hole with oil-free compressed air. Inside surface of hole shall be dry where required by manufacturer's instructions. Do not disturb anchor during recommended curing time. Do not exceed maximum torque as specified in manufacturer's instructions.

3.5 ATTACHMENT OF HANDRAILS

Toeboards and brackets shall be installed where indicated. Splices, where required, shall be made at expansion joints. Removable sections shall be installed as indicated.

3.5.1 Installation of Steel Handrails

Installation shall be in pipe sleeves embedded in concrete and filled with molten lead or sulphur with anchorage covered with standard pipe collar pinned to post. Rail ends shall be secured by steel pipe flanges anchored by expansion shields and bolts.

3.6 PARTITION POSTS AND OPENINGS

Posts shall be set in shoes bolted to the floor and in caps tap-screwed to clip angles in overhead construction, as indicated. Openings shall be formed using channels similar to the partition frames at ducts, pipes, and other obstructions.

3.7 DOOR FRAMES

Door frames shall be secured to the floor slab by means of angle clips and expansion bolts. Continuous door stops shall be welded to the frame or tap screwed with countersunk screws at no more than 18 inch centers, assuring in either case full contact with the frame. Any necessary reinforcements shall be made and the frames shall be drilled and tapped as required for hardware.

3.8 FASTENER SCHEDULE

Use anti-seizing lubricant on all stainless steel threads.

Service Use/Location	Product	Remarks
1. Anchor Bolts Cast into Concrete for Equipment Bases		
a. Interior Dry Areas	Stainless Steel headed anchor	

	bolts, unless otherwise specified with equipment	
b. Submerged, Ext., Interior Wet Areas	Stainless Steel headed anchor bolts, unless otherwise specified with equipment	

2. Anchor Bolts Cast into Conc. for Metal Fabrications/Struct. Components

a. Interior Dry Areas	Hot-dip galvanized steel headed anchor bolts	
b. Submerged, Ext., Interior Wet Areas	Stainless Steel headed anchor bolts	

3. Drilled Anchors for Mtl. Components to Cast-in-place Concrete

a. Submerged, Ext., Interior Wet Areas	Adhesive stainless Steel anchors	

4. Anchors in Grout-filled Concrete Masonry Units

a. Interior/Exterior Wet/Dry Areas	Hot-dip galvanized steel headed anchor bolts, zinc-plated or stainless steel sleeve anchors, or stainless steel adhesive anchors	

5. Connections for Structural Steel Framing

a. Interior/Exterior Wet/Dry Areas	High-strength steel connections	Use hot-dipped galv. high-strength bolted connections for galv. steel framing members

6. All Others

a. Interior/Exterior Wet/Dry Areas	Stainless steel fasteners	

-- End of Section --

SECTION TABLE OF CONTENTS

DIVISION 07 - THERMAL & MOISTURE PROTECTION

SECTION 07920

JOINT SEALANTS

PART 1 GENERAL

1.1 REFERENCES
1.2 SUBMITTALS
1.3 ENVIRONMENTAL CONDITIONS
1.4 DELIVERY AND STORAGE

PART 2 PRODUCTS

2.1 SEALANTS
2.1.1 Interior Sealant
2.1.2 Exterior Sealant
2.2 PRIMERS
2.3 BOND BREAKERS
2.4 BACKSTOPS
2.5 CLEANING SOLVENTS

PART 3 EXECUTION

3.1 SURFACE PREPARATION
3.1.1 Steel Surfaces
3.1.2 Aluminum or Bronze Surfaces
3.2 SEALANT PREPARATION
3.3 APPLICATION
3.3.1 Joint Width-To-Depth Ratios
3.3.2 Backstops
3.3.3 Primer
3.3.4 Bond Breaker
3.3.5 Sealants
3.4 PROTECTION AND CLEANING
3.4.1 Protection
3.4.2 Final Cleaning

-- End of Section Table of Contents --

SECTION 07920

JOINT SEALANTS

PART 1 GENERAL

1.1 REFERENCES

The publications listed below form a part of this specification to the extent referenced. The publications are referred to in the text by the basic designation only.

ASTM INTERNATIONAL (ASTM)

ASTM C 834	(2000el) Latex Sealants
ASTM C 920	(2002) Elastomeric Joint Sealants

1.2 SUBMITTALS

Government approval is required for submittals with a "G" designation; submittals not having a "G" designation are for information only. When used, a designation following the "G" designation identifies the office that will review the submittal for the Government. The following shall be submitted in accordance with Section 01330, SUBMITTAL PROCEDURES:

SD-03 Product Data

Sealants
Primers
Bond breakers
Backstops

Data for the sealants shall include shelf life and recommended cleaning solvents.

1.3 ENVIRONMENTAL CONDITIONS

The ambient temperature shall be within the limits of 40 and 100 degrees F when sealant is applied.

1.4 DELIVERY AND STORAGE

Deliver materials to the job site in unopened manufacturers' external shipping containers, with brand names, date of manufacture, color, and material designation clearly marked thereon. Elastomeric sealant containers shall be labeled to identify type, class, grade, and use. Carefully handle and store materials to prevent inclusion of foreign materials or subjection to sustained temperatures exceeding 100 F degrees or less than 0 degrees F.

PART 2 PRODUCTS

2.1 SEALANTS

Provide sealant that has been tested and found suitable for the substrates to which it will be applied.

2.1.1 Interior Sealant

ASTM C 834. Location(s) and color(s) of sealant shall be as follows:

	LOCATION	COLOR
a.	Small voids between walls or partitions and adjacent lockers, casework, shelving, door frames, built-in or surface-mounted equipment and fixtures, and similar items.	clear
b.	Perimeter of frames at doors, windows, and access panels which adjoin exposed interior concrete and masonry surfaces.	clear
c.	Joints between plumbing fixtures and ceramic surface;	clear
d.	Joints formed between concrete floor and tile surfaced base cove; joints occurring where substrates change.	clear
e.	Behind escutcheon plates at pipe penetrations; behind weld plates at ceramic surfaced walls.	clear

2.1.2 Exterior Sealant

For joints in vertical surfaces, provide ASTM C 920, Type S or M, Grade NS, Class 25, Use NT. For joints in horizontal surfaces, provide ASTM C 920, Type S or M, Grade P, Class 25, Use T. Location(s) and color(s) of sealant shall be as follows:

	LOCATION	COLOR
a.	Joints and recesses formed where frames of doors and gates adjoin masonry or metal frames. Use sealant at both exterior and interior surfaces of exterior wall penetrations.	clear
c.	Masonry joints where shelf angles occur.	clear
h.	Metal reglets, where flashing is inserted into masonry joints, and where flashing is penetrated by coping dowels.	clear

LOCATION	COLOR
i. Metal-to-metal joints where sealant is indicated or specified.	clear
j. Joints between ends of gravel stops, fascias, copings, and adjacent walls.	clear

2.2 PRIMERS

Provide a nonstaining, quick-drying type and consistency recommended by the sealant manufacturer for the particular application.

2.3 BOND BREAKERS

Provide the type and consistency recommended by the sealant manufacturer for the particular application.

2.4 BACKSTOPS

Provide glass fiber roving or neoprene, butyl, polyurethane, or polyethylene foams free from oil or other staining elements as recommended by sealant manufacturer. Backstop material shall be compatible with sealant.

2.5 CLEANING SOLVENTS

Provide type(s) recommended by the sealant manufacturer except for aluminum and bronze surfaces that will be in contact with sealant.

PART 3 EXECUTION

3.1 SURFACE PREPARATION

Surfaces shall be clean, dry to the touch, and free from dirt frost, moisture, grease, oil, wax, lacquer, paint, or other foreign matter that would tend to destroy or impair adhesion. When resealing an existing joint, remove existing calk or sealant prior to applying new sealant.

3.1.1 Steel Surfaces

Remove loose mill scale by sandblasting or, if sandblasting is impractical or would damage finish work, scraping and wire brushing. Remove protective coatings by sandblasting or using a residue-free solvent.

3.1.2 Aluminum or Bronze Surfaces

Remove temporary protective coatings from surfaces that will be in contact with sealant. When masking tape is used as a protective coating, remove tape and any residual adhesive just prior to sealant application. For removing protective coatings and final cleaning, use nonstaining solvents recommended by the manufacturer of the item(s) containing aluminum or bronze surfaces.

3.2 SEALANT PREPARATION

Do not add liquids, solvents, or powders to the sealant. Mix multicomponent elastomeric sealants in accordance with manufacturer's instructions.

3.3 APPLICATION

3.3.1 Joint Width-To-Depth Ratios

a. Acceptable Ratios:

JOINT WIDTH	JOINT DEPTH Minimum	JOINT DEPTH Maximum
For metal, or other nonporous surfaces:		
1/4 inch (minimum)	1/4 inch	1/4 inch
over 1/4 inch	1/2 of width	Equal to width
For concrete, masonry		
1/4 inch (minimum)	1/4 inch	1/4 inch
Over 1/4 inch to 1/2 inch	1/4 inch	Equal to width
Over 1/2 inch to 2 inches	1/2 inch	5/8 inch
Over 2 inches	(As recommended by sealant manufacturer)	

b. Unacceptable Ratios: Where joints of acceptable width-to-depth ratios have not been provided, clean out joints to acceptable depths and grind or cut to acceptable widths without damage to the adjoining work. Grinding shall not be required on metal surfaces.

3.3.2 Backstops

Install backstops dry and free of tears or holes. Tightly pack the back or bottom of joint cavities with backstop material to provide a joint of the depth specified. Install backstops in the following locations:

a. Where indicated.

b. Where backstop is not indicated but joint cavities exceed the acceptable maximum depths specified in paragraph entitled, "Joint Width-to-Depth Ratios."

3.3.3 Primer

Immediately prior to application of the sealant, clean out loose particles from joints. Where recommended by sealant manufacturer, apply primer to

joints in concrete masonry units, wood, and other porous surfaces in accordance with sealant manufacturer's instructions. Do not apply primer to exposed finish surfaces.

3.3.4 Bond Breaker

Provide bond breakers to the back or bottom of joint cavities, as recommended by the sealant manufacturer for each type of joint and sealant used, to prevent sealant from adhering to these surfaces. Carefully apply the bond breaker to avoid contamination of adjoining surfaces or breaking bond with surfaces other than those covered by the bond breaker.

3.3.5 Sealants

Provide a sealant compatible with the material(s) to which it is applied. Do not use a sealant that has exceeded shelf life or has jelled and can not be discharged in a continuous flow from the gun. Apply the sealant in accordance with the manufacturer's instructions with a gun having a nozzle that fits the joint width. Force sealant into joints to fill the joints solidly without air pockets. Tool sealant after application to ensure adhesion. Sealant shall be uniformly smooth and free of wrinkles. Upon completion of sealant application, roughen partially filled or unfilled joints, apply sealant, and tool smooth as specified.

3.4 PROTECTION AND CLEANING

3.4.1 Protection

Protect areas adjacent to joints from sealant smears. Masking tape may be used for this purpose if removed 5 to 10 minutes after the joint is filled.

3.4.2 Final Cleaning

Upon completion of sealant application, remove remaining smears and stains and leave the work in a clean and neat condition.

a. Masonry and Other Porous Surfaces: Immediately scrape off fresh sealant that has been smeared on masonry and rub clean with a solvent as recommended by the sealant manufacturer. Allow excess sealant to cure for 24 hour then remove by wire brushing or sanding.

b. Metal and Other Non-Porous Surfaces: Remove excess sealant with a solvent-moistened cloth.

-- End of Section --

SECTION TABLE OF CONTENTS

DIVISION 09 - FINISHES

SECTION 09900

PAINTS AND COATINGS

PART 1 GENERAL

1.1 REFERENCES
1.2 SUBMITTALS
1.3 REGULATORY REQUIREMENTS
1.3.1 Environmental Protection
1.3.2 Lead Content
1.3.3 Chromate Content
1.3.4 Asbestos Content
1.3.5 Mercury Content
1.3.6 Silica
1.3.7 Human Carcinogens
1.4 PACKAGING, LABELING, AND STORAGE
1.5 SAFETY AND HEALTH
1.5.1 Safety Methods Used During Coating Application
1.5.2 Toxic Materials
1.6 ENVIRONMENTAL CONDITIONS
1.6.1 Coatings
1.7 LOCATION AND SURFACE TYPE TO BE PAINTED
1.7.1 Painting Included
1.7.1.1 Exterior Painting
1.7.1.2 Interior Painting
1.7.2 Painting Excluded
1.7.3 Definitions and Abbreviations
1.7.3.1 Qualification Testing
1.7.3.2 Batch Quality Conformance Testing
1.7.3.3 Coating
1.7.3.4 DFT or dft
1.7.3.5 DSD
1.7.3.6 EPP
1.7.3.7 EXT
1.7.3.8 INT
1.7.3.9 micron / microns
1.7.3.10 mil / mils
1.7.3.11 mm
1.7.3.12 MPI Gloss Levels
1.7.3.13 MPI System Number
1.7.3.14 Paint
1.7.3.15 REX
1.7.3.16 RIN

PART 2 PRODUCTS

2.1 MATERIALS

PART 3 EXECUTION

3.1 PROTECTION OF AREAS AND SPACES NOT TO BE PAINTED
3.2 SURFACE PREPARATION
3.3 PREPARATION OF METAL SURFACES
3.3.1 New Ferrous Surfaces
3.3.2 Galvanized Surfaces
3.3.3 Non-Ferrous Metallic Surfaces
3.3.4 Existing Surfaces with a Bituminous or Mastic-Type Coating
3.4 PREPARATION OF CONCRETE AND CEMENTITIOUS SURFACE
3.4.1 Concrete and Masonry
3.4.1.1 Curing
3.4.1.2 Surface Cleaning
3.4.1.3 Allowable Moisture Content
3.4.1.4 Cosmetic Repair of Minor Defects
3.5 APPLICATION
3.5.1 Coating Application
3.5.2 Mixing and Thinning of Paints
3.5.3 Coating Systems
3.6 COATING SYSTEMS FOR METAL
3.7 COATING SYSTEMS FOR CONCRETE AND CEMENTITIOUS SUBSTRATES
3.8 INSPECTION AND ACCEPTANCE
3.9 PAINT TABLES
3.9.1 EXTERIOR PAINT TABLES

-- End of Section Table of Contents --

SECTION 09900

PAINTS AND COATINGS

PART 1 GENERAL

1.1 REFERENCES

The publications listed below form a part of this specification to the extent referenced. The publications are referred to within the text by the basic designation only.

AMERICAN CONFERENCE OF GOVERNMENTAL INDUSTRIAL HYGIENISTS (ACGIH)

ACGIH Limit Values	(2001) Threshold Limit Values for Chemical Substances and Physical Agents and Biological Exposure Indices
ACGIH TLV-DOC	(2001) Documentation of Biological Exposure Indices

ASTM INTERNATIONAL (ASTM)

ASTM D 523	(1989; R 1999) Specular Gloss
ASTM D 2092	(1995; R 2001el) Preparation of Zinc-Coated (Galvanized) Steel Surfaces for Painting
ASTM D 4263	(1983; R 1999) Indicating Moisture in Concrete by the Plastic Sheet Method
ASTM F 1869	(1998) Measuring Moisture Vapor Emission Rate of Concrete Subfloor Using Anhydrous Calcium Chloride

MASTER PAINTERS INSTITUTE (MPI)

MPI 10	(May 2002) Exterior Latex, Flat
MPI 23	(July 2002) Surface Tolerant Metal Primer
MPI 26	(July 2002) Cementitious Galvanized Metal Primer
MPI 79	(May 2002) Marine Alkyd Metal Primer
MPI 94	(May 2002) Exterior Alkyd, Semi-Gloss
MPI 107	(July 2002) Rust Inhibitive Primer

	(Water-Based)
MPI 134	(July 2002) Waterborne Galvanized Primer

SCIENTIFIC CERTIFICATION SYSTEMS (SCS)

SCS-EPP-SP01-01	(2002) Environmentally Preferable Product Specification for Architectural and Anti-Corrosive Paints

THE SOCIETY FOR PROTECTIVE COATINGS (SSPC)

SSPC PA 1	(2000) Shop, Field, and Maintenance Painting
SSPC PA 3	(1982; R 1995) Safety in Paint Application
SSPC SP 1	(1982; R 2000) Solvent Cleaning
SSPC SP 2	(1982; R 2000) Hand Tool Cleaning
SSPC SP 3	(1982; R 2000) Power Tool Cleaning
SSPC SP 6	(2000) Commercial Blast Cleaning

U.S GENERAL SERVICES ADMINISTRATION (GSA)

FED-STD-313	(Rev. D) Material Safety Data, Transportation Data and Disposal Data for Hazardous Materials Furnished to Government Activities

U.S. NATIONAL ARCHIVES AND RECORDS ADMINISTRATION (NARA)

29 CFR 1910.1000	Air Contaminants

1.2 SUBMITTALS

Submit the following in accordance with Section 01330, "Submittal Procedures."

The current MPI, "Approved Product List" which lists paint by brand, label, product name and product code as of the date of contract award, will be used to determine compliance with the submittal requirements of this specification. The Contractor may choose to use a subsequent MPI "Approved Product List", however, only one list may be used for the entire contract and each coating system is to be from a single manufacturer. All coats on a particular substrate must be from a single manufacturer. No variation from the MPI Approved Products List is acceptable.

Samples of specified materials may be taken and tested for compliance with specification requirements.

In keeping with the intent of Executive Order 13101, "Greening the Government through Waste Prevention, Recycling, and Federal Acquisition", products certified by SCS as meeting SCS-EPP-SP01-01 shall be given preferential consideration over registered products. Products that are registered shall be given preferential consideration over products not carrying any EPP designation.

SD-02 Shop Drawings

Piping identification

Submit color stencil codes

SD-03 Product Data

Coating; G, RE

Manufacturer's Technical Data Sheets

SD-04 Samples

Color; G, RE

Submit manufacturer's samples of paint colors. Cross reference color samples to color scheme as indicated.

SD-07 Certificates

Applicator's qualifications

Qualification For Testing laboratory for coatings G, RE

SD-08 Manufacturer's Instructions

Application instructions

Mixing

Detailed mixing instructions, minimum and maximum application temperature and humidity, potlife, and curing and drying times between coats.

Manufacturer's Material Safety Data Sheets

Submit manufacturer's Material Safety Data Sheets for coatings, solvents, and other potentially hazardous materials, as defined in FED-STD-313.

SD-10 Operation and Maintenance Data

Coatings: G, RE

Preprinted cleaning and maintenance instructions for all coating systems shall be provided.

1.3 REGULATORY REQUIREMENTS

1.3.1 Environmental Protection

In addition to requirements specified elsewhere for environmental protection, provide coating materials that conform to the restrictions of the local Air Pollution Control District and regional jurisdiction. Notify Contracting Officer of any paint specified herein which fails to conform.

1.3.2 Lead Content

Do not use coatings having a lead content over 0.06 percent by weight of nonvolatile content.

1.3.3 Chromate Content

Do not use coatings containing zinc-chromate or strontium-chromate.

1.3.4 Asbestos Content

Materials shall not contain asbestos.

1.3.5 Mercury Content

Materials shall not contain mercury or mercury compounds.

1.3.6 Silica

Abrasive blast media shall not contain free crystalline silica.

1.3.7 Human Carcinogens

Materials shall not contain ACGIH Limit Values and ACGIH TLV-DOC confirmed human carcinogens (A1) or suspected human carcinogens (A2).

1.4 PACKAGING, LABELING, AND STORAGE

Paints shall be in sealed containers that legibly show the contract specification number, designation name, formula or specification number, batch number, color, quantity, date of manufacture, manufacturer's formulation number, manufacturer's directions including any warnings and special precautions, and name and address of manufacturer. Paints and thinners shall be stored in accordance with the manufacturer's written directions, and as a minimum, stored off the ground, under cover, with sufficient ventilation to prevent the buildup of flammable vapors, and at temperatures between 40 to 95 degrees F.

1.5 SAFETY AND HEALTH

Apply coating materials using safety methods and equipment in accordance with the following:

Work shall comply with applicable Federal, State, and local laws and regulations. The Activity Hazard Analysis shall include analyses of the

potential impact of painting operations on painting personnel and on others involved in and adjacent to the work zone.

1.5.1 Safety Methods Used During Coating Application

Comply with the requirements of SSPC PA 3.

1.5.2 Toxic Materials

To protect personnel from overexposure to toxic materials, conform to the most stringent guidance of:

a. The applicable Manufacturer's Material Safety Data Sheets (MSDS) or local regulation.

b. 29 CFR 1910.1000.

c. ACGIH Limit Values, threshold limit values.

1.6 ENVIRONMENTAL CONDITIONS

1.6.1 Coatings

Do not apply coating when air or substrate conditions are:

a. Less than 5 degrees F above dew point;

b. Below 50 degrees F or over 95 degrees F, unless specifically pre-approved by the Contracting Officer and the product manufacturer. Under no circumstances shall application conditions exceed manufacturer recommendations.

1.7 LOCATION AND SURFACE TYPE TO BE PAINTED

1.7.1 Painting Included

Where a space or surface is indicated to be painted, include the following unless indicated otherwise.

a. Surfaces behind portable objects and surface mounted articles readily detachable by removal of fasteners, such as screws and bolts.

b. New factory finished surfaces that require identification or color coding and factory finished surfaces that are damaged during performance of the work.

1.7.1.1 Exterior Painting

Includes new surfaces of the building and exterior public wall surfaces as indicated.

1.7.1.2 Interior Painting

Includes new surfaces of the building and appurtenances as indicated. Where a space or surface is indicated to be painted, include the following items, unless indicated otherwise.

a. Exposed columns, beams, joists, and metal deck; and

b. Other contiguous surfaces.

1.7.2 Painting Excluded

Do not paint the following unless indicated otherwise.

a. Steel to be embedded in concrete or indicated to be finish free.

b. Copper, stainless steel, aluminum, brass, and lead except existing coated surfaces.

c. Hardware, fittings, and other factory finished items.

1.7.3 Definitions and Abbreviations

1.7.3.1 Qualification Testing

Qualification testing is the performance of all test requirements listed in the product specification. This testing is accomplished by MPI to qualify each product for the MPI Approved Product List, and may also be accomplished by Contractor's third party testing lab if an alternative to Batch Quality Conformance Testing by MPI is desired.

1.7.3.2 Batch Quality Conformance Testing

Batch quality conformance testing determines that the product provided is the same as the product qualified to the appropriate product specification. This testing shall only be accomplished by MPI testing lab.

1.7.3.3 Coating

A film or thin layer applied to a base material called a substrate. A coating may be a metal, alloy, paint, or solid/liquid suspensions on various substrates (metals, plastics, wood, paper, leather, cloth, etc.). They may be applied by electrolysis, vapor deposition, vacuum, or mechanical means such as brushing, spraying, calendering, and roller coating. A coating may be applied for aesthetic or protective purposes or both. The term "coating" as used herein includes emulsions, enamels, stains, varnishes, sealers, epoxies, and other coatings, whether used as primer, intermediate, or finish coat. The terms paint and coating are used interchangeably.

1.7.3.4 DFT or dft

Dry film thickness, the film thickness of the fully cured, dry paint or coating.

1.7.3.5 DSD

Degree of Surface Degradation, the MPI system of defining degree of surface degradation. Five (5) levels are generically defined under the Assessment sections in the MPI Maintenance Repainting Manual.

1.7.3.6 EPP

Environmentally Preferred Products, a standard for determining environmental preferability in support of Executive Order 13101.

1.7.3.7 EXT

MPI short term designation for an exterior coating system.

1.7.3.8 INT

MPI short term designation for an interior coating system.

1.7.3.9 micron / microns

The metric measurement for 0.001 mm or one/one-thousandth of a millimeter.

1.7.3.10 mil / mils

The English measurement for 0.001 in or one/one-thousandth of an inch, equal to 25.4 microns or 0.0254 mm.

1.7.3.11 mm

The metric measurement for millimeter, 0.001 meter or one/one-thousandth of a meter.

1.7.3.12 MPI Gloss Levels

MPI system of defining gloss. Seven (7) gloss levels (G1 to G7) are generically defined under the Evaluation sections of the MPI Manuals. Traditionally, Flat refers to G1/G2, Eggshell refers to G3, Semigloss refers to G5, and Gloss refers to G6.

Gloss levels are defined by MPI as follows:

Gloss Level	Description	Units @ 60 degrees	Units @ 85 degrees
G1	Matte or Flat	0 to 5	10 max
G2	Velvet	0 to 10	10 to 35
G3	Eggshell	10 to 25	10 to 35
G4	Satin	20 to 35	35 min
G5	Semi-Gloss	35 to 70	
G6	Gloss	70 to 85	
G7	High Gloss		

Gloss is tested in accordance with ASTM D 523. Historically, the Government has used Flat (G1 / G2), Eggshell (G3), Semi-Gloss (G5), and

Gloss (G6).

1.7.3.13 MPI System Number

The MPI coating system number in each Division found in either the MPI Architectural Painting Specification Manual or the Maintenance Repainting Manual and defined as an exterior (EXT/REX) or interior system (INT/RIN). The Division number follows the CSI Master Format.

1.7.3.14 Paint

See Coating definition.

1.7.3.15 REX

MPI short term designation for an exterior coating system used in repainting projects or over existing coating systems.

1.7.3.16 RIN

MPI short term designation for an interior coating system used in repainting projects or over existing coating systems.

PART 2 PRODUCTS

2.1 MATERIALS

Conform to the coating specifications and standards referenced in PART 3. Submit manufacturer's technical data sheets for specified coatings and solvents. Submit table of piping identification and color system.

PART 3 EXECUTION

3.1 PROTECTION OF AREAS AND SPACES NOT TO BE PAINTED

Prior to surface preparation and coating applications, remove, mask, or otherwise protect, hardware, hardware accessories, machined surfaces, radiator covers, plates, lighting fixtures, public and private property, and other such items not to be coated that are in contact with surfaces to be coated. Following completion of painting, workmen skilled in the trades involved shall reinstall removed items. Restore surfaces contaminated by coating materials, to original condition and repair damaged items.

3.2 SURFACE PREPARATION

Remove dirt, splinters, loose particles, grease, oil, and other foreign matter and substances deleterious to coating performance as specified for each substrate before application of paint or surface treatments. Oil and grease shall be removed prior to mechanical cleaning. Cleaning shall be programmed so that dust and other contaminants will not fall on wet, newly painted surfaces. Exposed ferrous metals such as nail heads on or in contact with surfaces to be painted with water-thinned paints, shall be spot-primmed with a suitable corrosion-inhibitive primer capable of preventing flash rusting and compatible with the coating specified for the

adjacent areas.

3.3 PREPARATION OF METAL SURFACES

3.3.1 New Ferrous Surfaces

a. Ferrous Surfaces including Shop-coated Surfaces and Small Areas That Contain Rust, Mill Scale and Other Foreign Substances: Solvent clean or detergent wash in accordance with SSPC SP 1 to remove oil and grease for elements to receive paint coating.

3.3.2 Galvanized Surfaces

a. New Galvanized Surfaces With Only Dirt and Zinc Oxidation Products: Clean with solvent, steam, or non-alkaline detergent solution in accordance with SSPC SP 1. If the galvanized metal has been passivated or stabilized, the coating shall be completely removed by brush-off abrasive blast. New galvanized steel to be coated shall not be "passivated" or "stabilized" If the absence of hexavalent stain inhibitors is not documented, test as described in ASTM D 2092, Appendix X2, and remove by one of the methods described therein.

3.3.3 Non-Ferrous Metallic Surfaces

Aluminum and aluminum-alloy, lead, copper, and other nonferrous metal surfaces.

a. Surface Cleaning: Solvent clean in accordance with SSPC SP 1 and wash with mild non-alkaline detergent to remove dirt and water soluble contaminants.

3.3.4 Existing Surfaces with a Bituminous or Mastic-Type Coating

Remove chalk, mildew, and other loose material by washing with a solution of 1/2 cup trisodium phosphate, 1/4 cup household detergent, one quart 5 percent sodium hypochlorite solution and 3 quarts of warm water.

3.4 PREPARATION OF CONCRETE AND CEMENTITIOUS SURFACE

3.4.1 Concrete and Masonry

3.4.1.1 Curing

Concrete, stucco and masonry surfaces shall be allowed to cure at least 30 days before painting, except concrete slab on grade, which shall be allowed to cure 90 days before painting.

3.4.1.2 Surface Cleaning

Remove the following deleterious substances:

a. Dirt, Chalking, Grease, and Oil: Wash new surfaces with a solution composed of 1/2 cup trisodium phosphate, 1/4 cup

household detergent, and 4 quarts of warm water. Then rinse thoroughly with fresh water. For large areas, water blasting may be used.

b. Fungus and Mold: Wash new surfaces with a solution composed of 1/2 cup trisodium phosphate, 1/4 cup household detergent, 1 quart 5 percent sodium hypochlorite solution and 3 quarts of warm water. Rinse thoroughly with fresh water.

c. Paint and Loose Particles: Remove by wire brushing.

d. Efflorescence: Remove by scraping or wire brushing followed by washing with a 5 to 10 percent by weight aqueous solution of hydrochloric (muriatic) acid. Do not allow acid to remain on the surface for more than five minutes before rinsing with fresh water. Do not acid clean more than 4 square feet of surface, per workman, at one time.

3.4.1.3 Allowable Moisture Content

Latex coatings may be applied to damp surfaces, but not to surfaces with droplets of water. Do not apply epoxies to damp vertical surfaces as determined by ASTM D 4263 or horizontal surfaces that exceed 3 lbs of moisture per 1000 square feet in 24 hours as determined by ASTM F 1869. In all cases follow manufacturers recommendations. Allow surfaces to cure a minimum of 30 days before painting.

3.4.1.4 Cosmetic Repair of Minor Defects

Repair or fill mortar joints and minor defects, including but not limited to spalls, in accordance with manufacturer's recommendations and prior to coating application.

3.5 APPLICATION

3.5.1 Coating Application

Painting practices shall comply with applicable federal, state and local laws enacted to insure compliance with Federal Clean Air Standards. Apply coating materials in accordance with SSPC PA 1. SSPC PA 1 methods are applicable to all substrates, except as modified herein.

At the time of application, paint shall show no signs of deterioration. Uniform suspension of pigments shall be maintained during application.

Unless otherwise specified or recommended by the paint manufacturer, paint may be applied by brush, roller, or spray. Rollers for applying paints and enamels shall be of a type designed for the coating to be applied and the surface to be coated. Submit Applicator's qualifications and Application instructions.

Paints, except water-thinned types, shall be applied only to surfaces that are completely free of moisture as determined by sight or touch.

Thoroughly work coating materials into joints, crevices, and open spaces. Special attention shall be given to insure that all edges, corners, crevices, welds, and rivets receive a film thickness equal to that of adjacent painted surfaces.

Each coat of paint shall be applied so dry film shall be of uniform thickness and free from runs, drops, ridges, waves, pinholes or other voids, laps, brush marks, and variations in color, texture, and finish. Hiding shall be complete.

Touch up damaged coatings before applying subsequent coats. Interior areas shall be broom clean and dust free before and during the application of coating material.

a. Drying Time: Allow time between coats, as recommended by the coating manufacturer, to permit thorough drying, but not to present topcoat adhesion problems. Provide each coat in specified condition to receive next coat.

b. Primers, and Intermediate Coats: Do not allow primers or intermediate coats to dry more than 30 days, or longer than recommended by manufacturer, before applying subsequent coats. Follow manufacturer's recommendations for surface preparation if primers or intermediate coats are allowed to dry longer than recommended by manufacturers of subsequent coatings. Each coat shall cover surface of preceding coat or surface completely, and there shall be a visually perceptible difference in shades of successive coats.

c. Finished Surfaces: Provide finished surfaces free from runs, drops, ridges, waves, laps, brush marks, and variations in colors.

d. Thermosetting Paints: Topcoats over thermosetting paints (epoxies and urethanes) should be applied within the overcoating window recommended by the manufacturer.

3.5.2 Mixing and Thinning of Paints

Reduce paints to proper consistency by adding fresh paint, except when thinning is mandatory to suit surface, temperature, weather conditions, application methods, or for the type of paint being used. Obtain written permission from the Contracting Officer to use thinners. The written permission shall include quantities and types of thinners to use.

When thinning is allowed, paints shall be thinned immediately prior to application with not more than 1 pint of suitable thinner per gallon. The use of thinner shall not relieve the Contractor from obtaining complete hiding, full film thickness, or required gloss. Thinning shall not cause the paint to exceed limits on volatile organic compounds. Paints of different manufacturers shall not be mixed.

3.5.3 Coating Systems

a. Systems by Substrates: Apply coatings that conform to the

respective specifications listed in the following Tables:

Table

Division 3. Exterior Concrete Paint Table
Division 4. Exterior Concrete Masonry Units Paint Table
Division 5. Exterior Metal, Ferrous and Non-Ferrous Paint Table
Division 9: Paint Table

b. Minimum Dry Film Thickness (DFT): Apply paints, primers, varnishes, enamels, undercoats, and other coatings to a minimum dry film thickness of 1.5 mil each coat unless specified otherwise in the Tables. Coating thickness where specified, refers to the minimum dry film thickness.

c. Coatings for Surfaces Not Specified Otherwise: Coat surfaces which have not been specified, the same as surfaces having similar conditions of exposure.

3.6 COATING SYSTEMS FOR METAL

Apply coatings of Tables in Division 5 for Exterior and Interior.

a. Apply specified ferrous metal primer on the same day that surface is cleaned, to surfaces that meet all specified surface preparation requirements at time of application.

b. Inaccessible Surfaces: Prior to erection, use one coat of specified primer on metal surfaces that will be inaccessible after erection.

c. Shop-primed Surfaces: Touch up exposed substrates and damaged coatings to protect from rusting prior to applying field primer.

d. Surface Previously Coated with Epoxy or Urethane: Apply MPI 101, 1.5 mils DFT immediately prior to application of epoxy or urethane coatings.

e. Pipes and Tubing: The semitransparent film applied to some pipes and tubing at the mill is not to be considered a shop coat, but shall be overcoated with the specified ferrous-metal primer prior to application of finish coats.

f. Exposed Nails, Screws, Fasteners, and Miscellaneous Ferrous Surfaces. On surfaces to be coated with water thinned coatings, spot prime exposed nails and other ferrous metal with latex primer MPI 107.

3.7 COATING SYSTEMS FOR CONCRETE AND CEMENTITIOUS SUBSTRATES

Apply coatings of Tables in Division 3, 4 and 9 for Exterior and Interior.

3.8 INSPECTION AND ACCEPTANCE

In addition to meeting previously specified requirements, demonstrate mobility of moving components, including swinging and sliding doors, cabinets, and windows with operable sash, for inspection by the Contracting Officer. Perform this demonstration after appropriate curing and drying times of coatings have elapsed and prior to invoicing for final payment. Submit certification of Qualification for testing laboratory for coatings.

3.9 PAINT TABLES

All DFT's are minimum values.

3.9.1 EXTERIOR PAINT TABLES

DIVISION 3: EXTERIOR CONCRETE PAINT TABLE

a. New exposed concrete; vertical and horizontal surfaces:

1. Water repellent block filler
System DFT: 0.0 mils

2. Permanent Anti-Graffiti Coating
System DFT: 2.0 mils

3. Sacrificial Anti-Graffiti Coating
System DFT: 3.0 mils

DIVISION 4: EXTERIOR CONCRETE MASONRY UNITS PAINT TABLE

a. New concrete masonry on uncoated surface:

1. Water repellent block filler
System DFT: 0.0 mils

2. Permanent Anti-Graffiti Coating
System DFT: 2.0 mils

3. Sacrificial Anti-Graffiti Coating
System DFT: 3.0 mils

DIVISION 5: INTERIOR AND EXTERIOR METAL, FERROUS AND NON-FERROUS PAINT TABLE

STEEL / FERROUS SURFACES

a. New Steel that has been hand or power tool cleaned to SSPC SP 2 or SSPC SP 3

1. Alkyd
New; MPI EXT 5.1Q-G5 (Semigloss) Existing; MPI REX 5.1D-G5

Primer:	Intermediate:	Topcoat:
MPI 23	MPI 94	MPI 94

System DFT: 5.25 mils

b. New Steel that has been blast-cleaned to SSPC SP 6:

STEEL / FERROUS SURFACES

1. Alkyd
New; MPI EXT 5.1D-G5 (Semigloss) / Existing; MPI REX 5.1D-G5

Primer:	Intermediate:	Topcoat:
MPI 79	MPI 94	MPI 94

System DFT: 5.25 mils

EXTERIOR GALVANIZED SURFACES

c. New Galvanized surfaces:

1. Cementitious primer / Latex
MPI EXT 5.3A-G1 (Flat)

Primer:	Intermediate:	Topcoat:
MPI 26	MPI 10	MPI 10

System DFT: 4.5 mils

2. Waterborne Primer / Latex
MPI EXT 5.3H-G1 (Flat)

Primer:	Intermediate:	Topcoat:
MPI 134	MPI 10	MPI 10

System DFT: 4.5 mils

-- End of Section --

SECTION TABLE OF CONTENTS

DIVISION 09 - FINISHES

SECTION 09915

COLOR SCHEDULE

PART 1 GENERAL

1.1 GENERAL
1.2 SUBMITTALS

PART 2 PRODUCTS

2.1 REFERENCE TO MANUFACTURER'S COLOR
2.2 COLOR SCHEDULE
2.2.1 Exterior Walls
2.2.2 Exterior Trim

PART 3 EXECUTION (Not Applicable)

-- End of Section Table of Contents --

SECTION 09915

COLOR SCHEDULE

PART 1 GENERAL

1.1 GENERAL

This section covers only the color of the exterior and interior materials and products that are exposed to view in the finished construction. The word "color" as used herein includes surface color and pattern. Requirements for quality and method of installation are covered in other appropriate sections of the specifications. Specific locations where the various materials are required are shown on the Drawings. Items not designated for color in this section may be specified in other sections. When color is not designated for items, the Contractor shall propose a color for approval.

1.2 SUBMITTALS

Government approval is required for submittals with a "G" designation; submittals not having a "G" designation are for information only. When used, a designation following the "G" designation identifies the office that will review the submittal for the Government. The following shall be submitted in accordance with Section 01330, SUBMITTAL PROCEDURES:

SD-04 Samples

Color Schedule; G, RE

Three sets of color boards, 45 days after the Contractor is given Notice to proceed, complying with the following requirements:

a. Color boards shall reflect all actual finish textures, patterns, and colors required for this contract.

b. Materials shall be labeled with the finish type, manufacturer's name, pattern, and color reference.

c. Samples shall be on size A4 or 8-1/2 by 11 inch boards with a maximum spread of size A1 or 25-1/2 by 33 inches for foldouts.

d. Samples for this color board are required in addition to samples requested in other specification sections.

PART 2 PRODUCTS

2.1 REFERENCE TO MANUFACTURER'S COLOR

Where color is shown as being specific to one manufacturer, an equivalent color by another manufacturer may be submitted for approval. Manufacturers and materials specified are not intended to limit the selection of equal colors from other manufacturers.

2.2 COLOR SCHEDULE

The color schedule lists the colors, patterns and textures required for exterior and interior finishes, including both factory applied and field applied colors.

2.2.1 Exterior Walls

Exterior wall colors shall apply to exterior wall surfaces including recesses at entrances and projecting vestibules. Conduit shall be painted to closely match the adjacent surface color. Wall color shall be provided to match the colors listed below.

a. Concrete Masonry Units: Clear Sealer, Non-sacrificial and sacrificial graffiti coatings as manufactured by Rainguard, International.

b. Precast Concrete: Adobe Brown as manufactured by Davis Colors.

2.2.2 Exterior Trim

Exterior trim shall be provided to match the colors listed below.

a. Gates and Frames: #233, Archives as manufactured by ICI Paints with Eggshell Finish.

b. Handrails: Sandblast off mill finish.

c. Caulking and Sealants: To match adjacent surface.

PART 3 EXECUTION (Not Applicable)

-- End of Section --

SECTION TABLE OF CONTENTS

DIVISION 09 - FINISHES

SECTION 09971

COATING OF EQUIPMENT

PART 1 GENERAL

1.1 REFERENCES
1.2 DEFINITIONS
1.3 SUBMITTALS
1.4 QUALITY ASSURANCE
1.4.1 Design Data
1.4.2 Test Reports
1.4.2.1 Coatings Qualification Test Reports
1.4.2.2 Recycled Metallic Abrasive Field Test Reports (Daily and Weekly)
1.4.3 Certificates
1.4.3.1 Work Plan
1.4.3.2 Qualifications of Certified Industrial Hygienist (CIH)
1.4.3.3 Qualifications of Testing Laboratory for Coatings
1.4.3.4 Qualifications of Testing Laboratory for Abrasive
1.4.3.5 Qualifications of Coating Contractors
1.4.3.6 Qualifications of Coating Manufacturer's Representative
1.4.3.7 Coating Materials
1.4.3.8 Coating System Component Compatibility
1.4.3.9 Non-metallic Abrasive
1.4.3.10 Metallic Abrasive
1.4.4 Product Data
1.4.4.1 Coating System Instructions
1.5 DELIVERY AND STORAGE
1.6 COATING HAZARDS
1.7 JOB SITE REFERENCES
1.8 PRE-APPLICATION MEETING

PART 2 PRODUCTS

2.1 COATING SYSTEM
2.1.1 Zinc-Rich Epoxy Primer Coat
2.1.2 Epoxy Intermediate Coat
2.1.3 Polyurethane Topcoat
2.2 COATING SAMPLE COLLECTION AND SHIPPING KIT
2.3 ABRASIVE SAMPLE COLLECTION AND SHIPPING KIT
2.4 SOLUBLE SALTS TEST KITS
2.4.1 Test Kit for Measuring Chlorides on Steel Surfaces
2.5 ABRASIVE
2.5.1 Non-metallic Abrasive
2.5.2 Metallic Abrasive
2.5.2.1 New and Remanufactured Steel Grit
2.5.2.2 Recycled Steel Grit

PART 3 EXECUTION

3.1 COATING AND ABRASIVE SAMPLE COLLECTION AND TESTING
3.1.1 Coating Sample Collection
3.1.2 Abrasive Sample Collection
3.1.3 Coating Sample Test Reports
3.1.4 Abrasive Sample Test Reports
3.2 SURFACES TO BE COATED
3.3 LIGHTING
3.4 SURFACE PREPARATION
3.4.1 Abrasive Blasting Equipment
3.4.2 Surface Standard
3.4.3 Pre-Preparation Testing for Surface Contamination
3.4.3.1 Pre-Preparation Testing for Oil and Grease Contamination
3.4.3.2 Pre-Preparation Testing for Soluble Salts Contamination
3.4.4 Abrasive Blasting
3.4.5 Disposal of Used Abrasive
3.4.6 Pre-Application Testing For Surface Contamination
3.4.6.1 Pre-Application Testing for Oil and Grease Contamination
3.4.6.2 Pre-Application Testing for Soluble Salts Contamination
3.4.6.3 Pre-Application Testing for Surface Cleanliness
3.5 MIXING AND APPLICATION OF SEALANT AND COATING SYSTEM
3.5.1 Preparation of Sealant and Coating Materials for Application
3.5.1.1 Mixing Sealant, Primer and Intermediate Coat Materials
3.5.1.2 Mixing Topcoat Material
3.5.1.3 Pot Life
3.5.1.4 Application Conditions and Recoat Windows
3.5.2 Application of Coating System
3.5.2.1 Application of Primer
3.5.2.2 Application of Stripe Coat
3.5.2.3 Application of Intermediate Coat
3.5.2.4 Application of Topcoat
3.5.2.5 Application of Joint Sealant
3.5.2.6 Procedure for Holiday and Spot Repairs of Newly Applied Coating
3.5.2.7 Structure Occupancy After Coating Application
3.6 FIELD TESTS AND INSPECTION
3.6.1 Coating Inspector
3.6.2 Field Inspection
3.6.2.1 Inspection Requirements
3.6.2.2 Daily Inspection Reports
3.6.2.3 Inspection Logbook
3.6.2.4 Inspection Equipment
3.6.3 Hold Points for Quality Control Inspections
3.7 FINAL CLEANUP

-- End of Section Table of Contents --

SECTION 09971

COATING OF EQUIPMENT

PART 1 GENERAL

1.1 REFERENCES

The following publications of the issues listed below, but referred to thereafter by basic designation only, form a part of this specification to the extent indicated by the references thereto:

ASTM INTERNATIONAL (ASTM)

ASTM D 1200	(1994; R 1999) Viscosity by Ford Viscosity Cup
ASTM D 1640	(1995; R 1999) Drying, Curing, or Film Formation of Organic Coatings at Room Temperature
ASTM D 3276	(2000) Standard Guide for Painting Inspectors (Metal Substrates)
ASTM D 3925	(1991; R 1996) Sampling Liquid Paints and Related Pigmented Coatings
ASTM D 4285	(1983; R 1999) Indicating Oil or Water in Compressed Air
ASTM D 4417	(1993; R 1999) Field Measurement of Surface Profile of Blast Cleaned Steel

U.S. DEPARTMENT OF DEFENSE (DOD)

MIL-DTL-24441	(Rev. C; Supp. 1) Paint, Epoxy-Polyamide
MIL-DTL-24441/19	(Rev. B) Paint, Epoxy-Polyamide, Zinc Primer, Formula 159, Type III
MIL-DTL-24441/31	(Rev. A) Paint, Epoxy-Polyamide, White, Formula 152, Type IV
MIL-PRF-85285	(Rev. C) Coating: Polyurethane, High-Solids

U.S. NATIONAL ARCHIVES AND RECORDS ADMINISTRATION (NARA)

29 CFR 1910-SUBPART Z	Toxic and Hazardous Substances
29 CFR 1910.134	Respiratory Protection

29 CFR 1910.1000	Air Contaminants
29 CFR 1926.59	Hazard Communication

THE SOCIETY FOR PROTECTIVE COATINGS (SSPC)

SSPC AB 2	(1996) Cleanliness of Recycled Ferrous Metallic Abrasives
SSPC AB 3	(1997; R 2000) Newly Manufactured or Re-Manufactured Steel Abrasives
SSPC PA 1	(2000) Shop, Field, and Maintenance Painting
SSPC PA 2	(1996) Measurement of Dry Paint Thickness with Magnetic Gages
SSPC SP 1	(1982; R 2000) Solvent Cleaning
SSPC SP 7	(2000) Brush-Off Blast Cleaning
SSPC SP 10	(2000) Near-White Blast Cleaning
SSPC SP COM	(2000) Surface Preparation Commentary
SSPC Guide 12	(1998) Guide for Illumination of Industrial Painting Projects
SSPC QP 1	(1998; R 2000) Evaluating Qualifications of Painting Contractors (Field Application to Complex Industrial Structures)
SSPC Guide to VIS 1	(1989) Guide to Visual Standard for Abrasive Blast Cleaned Steel
SSPC VIS 1	(1989) Visual Standard for Abrasive Blast Cleaned Steel (Standard Reference Photographs)

1.2 DEFINITIONS

Definitions are provided throughout this Section, generally in the Article where used, and denoted by capital letters.

1.3 SUBMITTALS

Submit the following in accordance with Section 01330, SUBMITTAL REQUIREMENTS.

SD-06 Test Reports

Coatings Qualification Test Reports; G, RE

Coating Sample Test Reports; G, RE

Abrasive Sample Test Reports; G, RE

Daily Inspection Reports; G, RE

Recycled Metallic Abrasive Field Test Reports (Daily and Weekly); G, RE

SD-07 Certificates

Work Plan; G, RE

Qualifications of Certified Industrial Hygienist (CIH); G, RE

Qualifications of Testing Laboratory for Coatings; G, RE

Qualifications of Testing Laboratory for Abrasive; G, RE

Qualifications of Coating Contractors; G, RE

Qualifications of Coating Manufacturer's Representative; G, RE

Coating Materials; G, RE

Coating System Component Compatibility; G, RE

Non-metallic Abrasive; G, RE

Metallic Abrasive; G, RE

SD-08 Manufacturer's Instructions

Joint Sealant; G, RE

Coating System Instructions; G, RE

SD-11 Closeout Submittals

Disposal of Used Abrasive; G, RE

Inspection Logbook; G, RE

1.4 QUALITY ASSURANCE

1.4.1 Design Data

1.4.2 Test Reports

1.4.2.1 Coatings Qualification Test Reports

Submit test results from independent laboratory of representative samples of each coating material. U.S. Department of Defense laboratories are considered to be independent laboratories for purposes of compliance with

"QUALIFICATION INSPECTION" requirements herein. Samples must have been tested within the last three years. Submit results for epoxy materials as required in article entitled "QUALIFICATION INSPECTION" of MIL-DTL-24441, and as revised by article entitled "Coating System" herein. Submit results for polyurethane materials as required in article entitled "QUALIFICATION INSPECTION" of MIL-PRF-85285, and as revised by article entitled "Coating System" herein. Note that requirement for "QUALIFICATION INSPECTION" is a pre-qualification requirement, and involves the same testing required for listing in the Qualified Products List of the respective material.

1.4.2.2 Recycled Metallic Abrasive Field Test Reports (Daily and Weekly)

Submit test results from independent laboratory of daily and weekly Quality Control testing required by SSPC AB 2.

1.4.3 Certificates

1.4.3.1 Work Plan

Submit a written plan describing in detail all phases of coating operations. Address work sequencing, surface preparation, coating application, recoat and cure time projections, as well as how each step will be controlled, tested, and evaluated. Describe equipment and methods used to measure and monitor weather conditions, including but not limited to temperature, relative humidity, and dew point. Provide detailed procedures, including manufacturer's instructions, for repairing defects in the coating film such as runs, drips, sags, holidays, overspray, etc. Address safety measures, work scheduling around weather, and record keeping.

1.4.3.2 Qualifications of Certified Industrial Hygienist (CIH)

Submit name, address, telephone number, FAX number, and e-mail address of the independent third party CIH. Submit documentation that hygienist is certified by the American Board of Industrial Hygiene in comprehensive practice, including certification number and date of certification/recertification. Provide evidence of experience with hazards involved in industrial coating application work.

1.4.3.3 Qualifications of Testing Laboratory for Coatings

Submit name, address, telephone number, FAX number, and e-mail address of the independent third party laboratory selected to perform testing of coating samples for compliance with specification requirements. Submit documentation that laboratory is regularly engaged in testing of paint samples for conformance with specifications, and that persons performing analyses are qualified.

1.4.3.4 Qualifications of Testing Laboratory for Abrasive

Submit name, address, telephone number, FAX number, and e-mail address of the independent third party laboratory selected to perform testing of abrasive for compliance with specification requirements. Submit documentation that laboratory has experience in testing samples of abrasive for conformance with specifications, and that persons performing analyses

are qualified.

1.4.3.5 Qualifications of Coating Contractors

All Contractors and subcontractors that perform surface preparation or coating application shall be certified by the Society for Protective Coatings (formerly Steel Structures Painting Council) (SSPC) to the requirements of SSPC QP 1 prior to contract award, and shall remain certified while accomplishing any surface preparation or coating application. The painting Contractors and painting subcontractors must remain so certified for the duration of the project. If a Contractor's or subcontractor's certification expires, the firm will not be allowed to perform any work until the certification is reissued. Requests for extension of time for any delay to the completion of the project due to an inactive certification will not be considered and liquidated damages will apply. Notify the Contracting Officer of any change in Contractor certification status.

Submit the name, address, telephone number, FAX number, and e-mail address of the Contractor that will be performing all surface preparation and coating application. Submit evidence that key personnel have successfully performed surface preparation and application of coatings on water plants or water production facilities on a minimum of three separate projects within the past three years. List information by individual and include the following:

a. Name of individual and proposed position for this work.

b. Information about each previous assignment including:

    a. Position or responsibility

    b. Employer (if other than the Contractor)

    c. Name of facility owner

    d. Mailing address, telephone number, and telex number (if non-US) of facility owner

    e. Name of individual in facility owner's organization who can be contacted as a reference

    f. Location, size and description of structure

    g. Dates work was carried out

    h. Description of work carried out on structure

1.4.3.6 Qualifications of Coating Manufacturer's Representative

Evidence of experience and training of the Coating Manufacturer’s Representative(s), including name, phone number and address, a statement from the coating manufacturer certifying that the representative has successfully completed all of the manufacturer’s training for material

storage, mixing, application, and testing, has been directly involved in evaluation and application of industrial coatings for not less than 10 steel structures within the last 5 years, and is not an employee of the Contractor. The manufacturer's representative shall advise on surface preparation, inspections, surface repair materials and methods, material handling, batching and mixing, application, curing, and testing.

1.4.3.7 Coating Materials

Provide manufacturer's certification of conformance to contract requirements.

1.4.3.8 Coating System Component Compatibility

Provide certification from each manufacturer of components of the coating system, epoxy primer, epoxy intermediate, and polyurethane topcoat, that the supplied coating material is suitable for use in the specified coating system. Each manufacturer shall identify the specific products, including manufacturer's name, which their product may be used with. The certification shall provide the name of the manufacturer that will provide technical support for the entire system. When all coating materials are manufactured by one manufacturer, this certification is not required.

1.4.3.9 Non-metallic Abrasive

Provide manufacturer's certification of conformance to contract requirements and provide copies of test results.

1.4.3.10 Metallic Abrasive

Provide manufacturer's certification of conformance to contract requirements and provide copies of test results.

1.4.4 Product Data

1.4.4.1 Coating System Instructions

Submit manufacturer's printed instructions including detailed mixing and application procedures, number and types of coats required, minimum and maximum application temperatures, and curing procedures. Include materials safety data sheets (MSDS) for materials to be used at the job site in accordance with 29 CFR 1926.59.

1.5 DELIVERY AND STORAGE

Ship, store, and handle materials in accordance with SSPC PA 1, and as modified in this Section. Maintain temperature in storage spaces between 40 and 75 degrees F, and air temperature more than 5 degrees F above the dew-point at all times. Inspect materials for damage prior to use and return non-compliant materials to manufacturer. Remove materials with expired shelf life from government property immediately and notify the Contracting Officer. Expired materials may be returned to manufacturer, tested, and if compliant, issued a shelf life extension.

1.6 COATING HAZARDS

Ensure that employees are trained in all aspects of the safety plan. Specified coatings may have potential health hazards if ingested or improperly handled. The coating manufacturer's written safety precautions shall be followed throughout mixing, application, and curing of the coatings. During all cleaning, cleanup, surface preparation, and paint application phases, ensure that employees are protected from toxic and hazardous chemical agents which exceed concentrations in 29 CFR 1910.1000. Comply with respiratory protection requirements in 29 CFR 1910.134. The CIH shall approve work procedures and personal protective equipment.

1.7 JOB SITE REFERENCES

Make available to the Contracting Officer at least one copy each of ASTM D 3276, ASTM D 3925, ASTM D 4285, ASTM D 4417, SSPC SP COM, SSPC SP 1, SSPC SP 7, SSPC SP 10, SSPC PA 1, SSPC PA 2, SSPC Guide 12, SSPC Guide to VIS 1, SSPC VIS 1, and an SSPC Certified Contractor Evaluation Form at the job site.

1.8 PRE-APPLICATION MEETING

After approval of submittals but prior to the initiation of coating work, Contractor representatives, including at a minimum, project superintendent and QC manager, paint foreman, Contracting Officer representatives, coating inspector, shall have a pre-application coating preparatory meeting. This meeting shall be in addition to the pre-construction conference. Specific items addressed shall include: work plan, safety plan, inspection standards, inspector qualifications and tools, test procedures, environmental control system, safety plan, and test logs. Notify Contracting Officer at least ten days prior to meeting.

PART 2 PRODUCTS

2.1 COATING SYSTEM

Alternate systems or products will not be considered. All primer, intermediate coat and topcoat materials shall be supplied by one supplier. The entire coating system is intended to be applied in the field. Alternatively, surface preparation may be accomplished in the shop, following all temperature, humidity, and testing requirements listed herein, followed by an application of a universal primer compatible with the intermediate and final coats. Adjust all shop preparation to avoid conflicts with final surface preparation requirements.

The Military specification epoxy and polyurethane products specified in this Section do not require approval for listing on the QPL prior to contract award, as indicated in paragraph 3.2 of MIL-DTL-24441 and paragraph 3.1 of MIL-PRF-85285. Testing of products by an independent laboratory to the "QUALIFICATION INSPECTION" requirements of MIL-DTL-24441 and MIL-PRF-85285prior to contract award is required. See specific submittal requirements in Article entitled "Quality Assurance."

2.1.1 Zinc-Rich Epoxy Primer Coat

Epoxy polyamide, MIL-DTL-24441/19 (Formula 159, Type III).

2.1.2 Epoxy Intermediate Coat

Epoxy polyamide, MIL-DTL-24441/31 (Formula 152, Type IV, White (Tinted)). Tint using pigment dispersions prepared for epoxy paint tinting. Manufacturer shall tint material and appropriately label. All other requirements of this Military Specification apply.

2.1.3 Polyurethane Topcoat

Polyurethane coating topcoat of MIL-PRF-85285, Type II, color to be selected by the Contracting Officer.

Modify paragraph 3.6.4 of MIL-PRF-85285, Viscosity and Pot Life, as follows:

The viscosity of the admixed coating, when tested in accordance with ASTM D 1200 through a No. 4 Ford cup, shall be as follows:

Time from mix (minimum)	Maximum time through a No. 4 Ford cup
Initially	30 seconds
2 hours	60 seconds
4 hours	No gel

Modify paragraph 3.7.1 of MIL-PRF-85285, Drying Time, as follows:

When applied by spray techniques and when tested in accordance with ASTM D 1640, the coating shall be set-to-touch within four hours and dry-hard within eight hours (see 4.6 and table I).

2.2 COATING SAMPLE COLLECTION AND SHIPPING KIT

Provide a kit that contains one quart can for the base of each coating material, an appropriately sized can for each activator, dipping cups for each component to be sampled, a shipping box sized for the samples to to be shipped, and packing material. Mark cans for the appropriate component. Provide shipping documents, including either pre-paid shipping or a shipper number that can be used by the Contracting Officer to arrange pickup, addressed to the approved coating testing laboratory.

2.3 ABRASIVE SAMPLE COLLECTION AND SHIPPING KIT

Provide a kit that contains one suitable plastic bag or container for each sample to be collected. Mark containers for the appropriate component. Provide shipping documents, including either pre-paid shipping or a shipper number that can be used by the Contracting Officer to arrange pickup, addressed to the approved coating testing laboratory.

2.4 SOLUBLE SALTS TEST KITS

2.4.1 Test Kit for Measuring Chlorides on Steel Surfaces

Provide test kits called CHLOR*TEST, as manufactured by CHLOR*RID

International Inc. of Chandler, Arizona (www.chlor-rid.com), or equal. An "equal" test kit shall meet the following requirements:

a. Kit contains all materials,supplies, tools and instructions for field testing and on-site quantitative evaluation;

b. Kit extract solution is acidic, factory pre-measured, pre-packaged, and of uniform concentration;

c. Kit components and solutions are mercury free and environmentally friendly;

d. Kit contains a factory sealed titration device;

e. Kit contains new materials and solutions for each test;

f. Test container (vessel, sleeve, cell. etc.) creates a sealed, encapsulated environment during chloride ion extraction;

g. Test container is suitable for testing the following steel surfaces: horizontal (up/down configuration), vertical, flat, curved, smooth, pitted, and rough;

h. Kit uses test container, with resulting chloride ion extract solution, as the titration container;

i. Chloride ion concentration is directly measured in micrograms per square centimeter without using either conversion charts or tables.

2.5 ABRASIVE

The referenced abrasive specifications have maximum limits for soluble salts contamination, however, this maximum level of contamination does not guarantee that contamination will not be transferred to the steel surface during abrasive blasting. Other factors such as on-site handling and recycling can allow contamination of abrasive. Contractors are cautioned to verify that the chosen abrasive, along with work and storage processes, allow the final surface cleanliness requirements to be achieved. Successful testing of chlorides in abrasive does not negate the final acceptance testing of steel surfaces.

Abrasive material shall contain not more than a maximum of one percent by weight of any toxic substance listed in either Table Z-1, Z-2, or Z-3 or 29 CFR 1910-SUBPART Z, with the exception of inert or nuisance dust materials, arsenic, beryllium, cadmium, cobalt, lead, mercury, rhodium, silver, tellurium, thallium, and uranium.

2.5.1 Non-metallic Abrasive

Use abrasive that is specifically selected and graded to provide a sharp, angular profile to the specified depth. Do not use ungraded abrasive. Make adjustments to processes or abrasive gradation to achieve specified surface profile. Recycled non-metallic abrasive shall meet all requirements of the specification each time that it is placed in the blast

pot.

2.5.2 Metallic Abrasive

2.5.2.1 New and Remanufactured Steel Grit

Conform to the chemical and physical properties of SSPC AB 3.

2.5.2.2 Recycled Steel Grit

Conform to the chemical and physical properties of SSPC AB 2

PART 3 EXECUTION

3.1 COATING AND ABRASIVE SAMPLE COLLECTION AND TESTING

3.1.1 Coating Sample Collection

Notify Contracting Officer three days in advance of sampling. The Contracting Officer and either the QC Manager or NACE Coating Inspector shall witness all sampling. Provide a sample collection kit as required in Article entitled "Coating Sample Collection and Shipping Kit." Obtain a one quart sample of each batch of each base material, and proportional samples of each activator based on mix ratio, by random selection from sealed containers in accordance with ASTM D 3925. Prior to sampling, mix contents of each sealed container to ensure uniformity. A batch is defined as that quantity of material processed by the manufacturer at one time and identified by number on the label. Identify samples by designated name, specification number, batch number, project contract number, sample date, intended use, and quantity involved. The Contracting Officer will take possession of the packaged samples, contact the shipping company to arrange for pickup, and relinquish the samples only to the shipping representative for shipment to the approved laboratory for testing as required by the paragraph entitled "Coating Sample Testing."

3.1.2 Abrasive Sample Collection

Notify Contracting Officer three days in advance of sampling. The Contracting Officer shall witness all sampling. Provide suitably sized containers for each sample to be taken. Provide a sample collection kit as required in Article entitled "Abrasive Sample Collection and Shipping Kit." For purposes of quality conformance inspection, a lot shall consist of all abrasive materials of the same type from a single, uniform batch produced and offered for delivery at one time. Obtain samples of each abrasive lot. The addition of any substance to a batch shall constitute a new lot. Identify samples by designated name, specification number, lot number, project contract number, sample date, intended use, and quantity involved. The Contracting Officer will take possession of the packaged samples, contact the shipping company to arrange for pickup, and relinquish the samples only to the shipping representative for shipment to the approved laboratory for testing as required by the Article entitled "Abrasive Sample Testing."

3.1.3 Coating Sample Test Reports

Test samples of all primer, intermediate, and topcoat materials for compliance with requirements of Table I. Reject entire batch represented by samples that fail one or more tests, reselect, and retest samples.

3.1.4 Abrasive Sample Test Reports

Test samples of abrasive materials for compliance with the appropriate abrasive specification. Reject entire lot represented by samples that fail one or more tests, reselect, and retest samples.

3.2 SURFACES TO BE COATED

Coat exterior surfaces of above ground equipment and equipment in vaults.

3.3 LIGHTING

Provide lighting for all work areas as prescribed in SSPC Guide 12.

3.4 SURFACE PREPARATION

3.4.1 Abrasive Blasting Equipment

Use abrasive blasting equipment of conventional air, force-feed, or pressure type. Maintain a minimum pressure of 95 psig at nozzle. Confirm that air supply for abrasive blasting is free of oil and moisture when tested in accordance with ASTM D 4285. Test air quality at each startup, but in no case less often than every five operating hours.

3.4.2 Surface Standard

Inspect surfaces to be coated, and select plate with similar properties and surface characteristics for use as a surface standard. Blast clean one or more 1 foot square steel panels as specified in Article entitled "Surface Preparation." Record blast nozzle type and size, air pressure at nozzle and compressor, distance of nozzle from panel, and angle of blast to establish procedures for blast cleaning. Measure surface profile in accordance with ASTM D 4417. When the surface standard complies with all specified requirements, seal with a clearcoat protectant. Use the surface standard for comparison to abrasive blasted surfaces throughout the course of work.

3.4.3 Pre-Preparation Testing for Surface Contamination

Perform testing, abrasive blasting, and testing in the prescribed order.

3.4.3.1 Pre-Preparation Testing for Oil and Grease Contamination

Inspect all surfaces for oil and/or grease contamination using two or more of the following inspection techniques: 1) Visual inspection, 2) WATER BREAK TEST, 3) CLOTH RUB TEST. Reject oil and/or grease contaminated surfaces, clean in accordance with SSPC SP 1, and recheck for contamination until surfaces are free of oil and grease.

WATER BREAK TEST - Spray atomized mist of distilled water onto surface, and observe for water beading. If water "wets" surface rather than beading up, surface can be considered free of oil or grease contamination. Beading of water (water forms droplets) is evidence of oil or grease contamination.

CLOTH RUB TEST - Rub a clean, white, lint free, cotton cloth onto surface and observe for discoloration. To confirm oil or grease contamination in lightly stained areas, a non-staining solvent may be used to aid in oil or grease extraction. Any visible discoloration is evidence of oil or grease contamination.

3.4.3.2 Pre-Preparation Testing for Soluble Salts Contamination

Test surfaces for soluble salts, and wash as required, prior to abrasive blasting. Soluble salt testing is also required in Article entitled "Pre-Application Testing for Soluble Salts Contamination" as a final acceptance test of prepared surfaces after abrasive blasting, and successful completion of this phase does not negate that requirement. This phase is recommended since pre-preparation testing and washing are generally more advantageous than attempting to remove soluble salt contamination after abrasive blasting. Effective removal of soluble salts will require removal of any barrier to the steel surface, including rust. This procedure may necessitate combinations of wet abrasive blasting, high pressure water rinsing, and cleaning using a solution of water washing and soluble salts remover. The soluble salts remover shall be acidic, biodegradable, nontoxic, noncorrosive, and after application, will not interfere with primer adhesion. Delays between testing and preparation, or testing and coating application, may allow for the formation of new contamination. Use potable water, or potable water modified with soluble salt remover, for all washing or wet abrasive blasting. Test methods and equipment used in this phase are selected at the Contractor's discretion.

3.4.4 Abrasive Blasting

Abrasive blast steel surfaces to near-white metal in accordance with SSPC SP 10. Prepared surfaces shall conform to SSPC VIS 1 and SSPC Guide to VIS 1 and shall match the prepared test-panels. Provide a 2 to 3 mil surface profile. Reject profile greater than 3 mils, discontinue abrasive blasting, and modify processes and materials to provide the specified profile. Measure surface profile in accordance with ASTM D 4417. Measure profile at rate of three tests for the first 1000 square feet plus one test for each additional 1000 square feet or part thereof. Provide two additional measurements for each non-compliant measurement. When surfaces are reblasted for any reason, retest profile as specified. If Method C of ASTM D 4417 is used to measure profile, attach test tapes to Daily Inspection Reports. Following abrasive blasting, remove dust and debris by brushing, blowing with oil-free and moisture-free compressed air, or vacuum cleaning. Time interval between abrasive blasting and application of primer shall not exceed eight hours.

3.4.5 Disposal of Used Abrasive

Dispose of used abrasive off Government property in accordance with Federal, State, and Local mandated regulations.

3.4.6 Pre-Application Testing For Surface Contamination

3.4.6.1 Pre-Application Testing for Oil and Grease Contamination

Ensure tank surfaces are free of contamination as described in Article entitled "Pre-Preparation Testing for Oil and Grease Contamination," except that only questionable areas need be checked for beading of water misted onto surface.

3.4.6.2 Pre-Application Testing for Soluble Salts Contamination

Test surfaces for chloride contamination using the Test Kit described in article entitled "Test Kit for Measuring Chlorides on Steel Surfaces." Test all surfaces at rate of three tests for the first 1000 square feet plus one test for each additional 2000 square feet or part thereof. Concentrate testing of bare steel at areas of coating failure to bare steel and areas of corrosion pitting. Perform 30% of tests on bare steel at welds, divided equally between horizontal and vertical welds. One or more readings greater than 5 micrograms per square centimeter of chlorides is evidence of chloride contamination. Reject contaminated surfaces, wash as discussed in article entitled "Pre-Preparation Testing for Soluble Salts Contamination," allow to dry, and re-test until all required tests show allowable results. Reblast tested and cleaned areas as required. Label all test tubes and retain for test verification.

3.4.6.3 Pre-Application Testing for Surface Cleanliness

Apply coatings to dust free surfaces. To test surfaces, apply strip of clear adhesive tape to surface and rub onto surface with finger. When removed, the tape should show little or no dust, blast abrasive, or other contaminant. Reject contaminated surfaces and retest. Test surfaces at rate of three tests for the first 1000 square feet plus one test for each additional 1000 square feet or part thereof. Provide two additional tests for each failed test or questionable test. Attach test tapes to Daily Inspection Reports.

3.5 MIXING AND APPLICATION OF SEALANT AND COATING SYSTEM

3.5.1 Preparation of Sealant and Coating Materials for Application

Each of the sealant, primer, intermediate, and topcoat materials is a two-component material supplied in separate containers.

3.5.1.1 Mixing Sealant, Primer and Intermediate Coat Materials

Mix in accordance with manufacturer's instructions, which may differ for each product. Do not mix partial kits, or alter mix ratios. Mix materials in same temperature and humidity conditions specified in article entitled "Delivery and Storage." Allow mixed material to stand for the required induction time based on its temperature.

3.5.1.2 Mixing Topcoat Material

Do not mix partial kits, or alter mix ratios. Mix polyurethane coating materials in same temperature conditions specified in article entitled "Delivery and Storage." The polyurethane coating material is moisture sensitive and any introduction of moisture or water into the material during mixing or application will shorten usable pot life. Use a mixer that does not create a vortex. Do not add solvent without specific written recommendation from the manufacturer. No induction time is required, only thorough agitation of the mixed material.

3.5.1.3 Pot Life

Apply mixed products within stated pot life for each product. Stop applying when material becomes difficult to apply in a smooth, uniform wet film. Add all required solvent at time of mixing. Do not add solvent to extend pot life. Pot life is based on standard conditions at 70 degrees F and 50 percent relative humidity. For every 18 degrees F rise in temperature, pot life is reduced by approximately half, and for every 18 degrees F drop it is approximately doubled. Usable pot life depends on the temperature of the material at the time of mixing and the sustained temperature at the time of application. Other factors such as the shape of the container and volume of mixed material may also affect pot life. Precooling or exterior icing of components for at least 24 hours to a minimum of 50 degrees F in hot climates will extend pot life. High humidity at time of mixing and application shortens pot life of the Polyurethane topcoat material. Following are approximate pot life times:

a.	Epoxy primer and intermediate materials	4 hours
b.	Polyurethane topcoat materials	2 hours

3.5.1.4 Application Conditions and Recoat Windows

The application condition requirements for the coating system are very time and temperature sensitive, and are intended to avoid the delamination problems frequently found on industrial structures. Plan coating application to ensure that specified temperature, humidity, and condensation conditions are met. If conditions do not allow for orderly application of sealant, primer, stripe coat, intermediate coat and topcoat, use appropriate means of controlling air and surface temperatures, as required. Partial or total enclosures may be required, as well as other measures, to control conditions to allow for orderly application of all required coats.

Apply coating only when ambient air and steel temperatures are between 60 and 100 degrees F, and steel surface temperature is more than 5 degrees F above the dew-point of the ambient air during application and the first four hours for epoxy and the first eight hours for polyurethane. Do not apply coatings above 100 degrees F or below 60 degrees F.

Use Table entitled "RECOAT WINDOWS" to determine appropriate recoat windows for each coat after the initial coat. Apply each coating during appropriate RECOAT WINDOW.

If coating is not applied during RECOAT WINDOW, apply during EXTENDED

RECOAT WINDOW. Application of any epoxy coat within the EXTENDED RECOAT WINDOW requires application of a TACK COAT prior to applying any full coat. Perform cure test immediately prior to application of TACK COAT to determine condition of applied coating. If CURE TEST indicates that surface is fully cured, provide GLOSS REMOVAL prior to application of TACK COAT.

If coating is not applied during EXTENDED RECOAT WINDOW, or if surface temperature exceeds 120 degrees F between applications, wash surface with water and detergent, rinse clean with fresh water and allow surface to dry thoroughly, provide GLOSS REMOVAL, apply TACK COAT, where applicable, within 24 hours, and apply next full coat within TACK COAT RECOAT WINDOW.

RECOAT WINDOWS

EPOXY OVER EPOXY

Temperature degrees F	60-70	71-80	81-90	91-100	101-110	111-120
RECOAT WINDOW (Hrs.)	24-72	18-60	16-48	12-36	8-18	4-6
EXTENDED RECOAT WINDOW (Hrs.)	72-168	60-140	48-120	36-96	18-36	6-12
TACK COAT RECOAT WINDOW (Hrs.)	6-72	4-60	4-48	3-36	2-18	1-6

POLYURETHANE OVER EPOXY

Temperature degrees F	60-70	71-80	81-90	91-100	101-110	111-120
RECOAT WINDOW (Hrs.)	24-96	24-72	16-48	12-36	10-24	8-16
EXTENDED RECOAT WINDOW (Hrs.)	96-168	72-144	48-120	36-96	24-48	16-24
TACK COAT RECOAT WINDOW (Hrs.)	24-96	24-72	16-48	12-36	10-24	8-16

POLYURETHANE OVER POLYURETHANE

Temperature degrees F	60-70	71-80	81-90	91-100	101-110	111-120
RECOAT WINDOW (Hrs.)	8-48	6-48	4-36	3-24	2-12	1-2
EXTENDED RECOAT WINDOW (Hrs.)	NONE ----------					
TACK COAT RECOAT WINDOW (Hrs.)	NO TACK COAT USED ----------					

The temperature ranges shown in the table above are for determining recoat windows. Choose recoat window based on the highest surface temperature that was sustained for one or more hours between coats. This applies to the entire time between coats. Measure and record air and surface temperatures on hourly basis to determine appropriate recoat windows. If surface temperature goes above 100 degrees F, measure and record temperatures every half hour.

CURE TEST - Where indicated, test surface for cure using high-flash

aromatic Naphtha only (cas #64742-95-6). Do not use aliphatic VMP Naphtha. Wipe surface with rag saturated with Naphtha, and check for surface tackiness, loss of gloss, or other indications that solvent has softened surface. If softening is found on 95% of test sites, this is indication that coating has not fully cured, and GLOSS REMOVAL is not required if TACK COAT is applied within three hours and full coat is applied within the TACK COAT RECOAT WINDOW. Test surfaces at rate of three tests for the first 1000 square feet plus one test for each additional 1000 square feet or part thereof.

TACK COAT - Where indicated, apply coat of intermediate coat epoxy, at 1 to 2 mils WFT, then apply next specified full coat within TACK COAT RECOAT WINDOW. Thin TACK COAT material approximately 25% by volume, using appropriate epoxy thinner.

GLOSS REMOVAL - Where indicated, remove all gloss by hand sanding with 150-200 grit wet/dry sandpaper in a linear fashion, pressure wash or wipe down with a clean rag soaked with denatured alcohol to remove dust. Do not use rotary sanders or grinders.

3.5.2 Application of Coating System

Apply coatings in accordance with SSPC PA 1 and as specified herein. Apply coatings to surfaces that meet all stated surface preparation requirements.

After application of primer coat and prior to application of each subsequent coat, perform testing prescribed in article entitled "Pre-Application Testing For Surface Contamination," as necessary, to ensure minimal intercoat contamination. This testing may be reduced to one half of the prescribed rate for bare steel if the testing indicates no contamination when sampling is evenly distributed over surfaces being tested. If contamination is found between coats, revert to the specified testing rate. Generally, oil and grease contamination and soluble salts contamination are not encountered if subsequent coats are applied within specified recoat windows and unusual atmospheric events do not occur. Such atmospheric events as a coastal storm blowing onshore can bring unusual chloride contamination. Concern for intercoat contamination should be continually prevalent, and spot testing should be accomplished to verify satisfactory conditions. Where visual examination or spot testing indicates contamination, perform sufficient testing to verify non-contamination, or to define extent of contamination for appropriate treatment.

Apply each coat in a consistent wet film, at 90 degrees to previous coat. Ensure that primer and intermediate coat "cold joints" are no less than six inches from welds. Apply stripe coat by brush. Apply all other coats by spray application. Use appropriate controls to prevent airborne coating fog from drifting beyond 15 feet from the structure perimeter. Cover or protect all surfaces that will not be coated. The cleanliness, temperature, recoat windows, and airborne paint containment requirements may necessitate the use of enclosures, portable shelters, or other appropriate controls.

Apply coatings at the following specified thickness:

Coat	Desired Thickness Range Mils DFT	Minimum Mils DFT	Maximum Mils DFT
Primer	2 - 5	2	6
Intermediate	3 - 5	3	8
Top	2 - 3	2	4
Total system	-----	9	12

3.5.2.1 Application of Primer

Apply primer coat, maintaining paint supply container height within 3 feet of the paint nozzle for applying zinc primer. Maintain constant agitation of paint pot to ensure that zinc does not settle in container.

3.5.2.2 Application of Stripe Coat

Apply a stripe coat of intermediate coat epoxy material within RECOAT WINDOW of primer, allowing sufficient dry time to allow application of intermediate coat within RECOAT WINDOW of primer. Apply by brush, working material into corners, crevices, angles, and welds, and onto outside corners and angles.

3.5.2.3 Application of Intermediate Coat

Apply intermediate coat within RECOAT WINDOW of primer coat.

3.5.2.4 Application of Topcoat

Make all required repairs to primer and intermediate coats as specified in paragraph entitled "Procedure for Holiday and Spot Repairs of Newly Applied Coating" prior to applying topcoat. Apply topcoat within RECOAT WINDOW of intermediate coat. The polyurethane topcoat may require multiple passes to achieve desired aesthetics and required thickness. Consult manufacturer for thinning and application procedures for anticipated temperature, humidity, and wind conditions. Touch-up blemishes and defects within recoat window of polyurethane topcoat. Retain sample of polyurethane topcoat, from the same batch used to coat structure, to make touch-ups that might be required later.

3.5.2.5 Application of Joint Sealant

Apply joint sealant to back-to-back steel joints that are less that 3/8 inches wide and are not seal welded. Apply sealant to top and bottom, or each side, of narrow joints. Apply sealant within 48 hours of application of the topcoat, and touch-up with topcoat after appropriate cure of the sealant.

3.5.2.6 Procedure for Holiday and Spot Repairs of Newly Applied Coating

Repair coating film defects at the earliest practicable time, preferably before application of the succeeding coat. Observe all requirements for soluble salts contamination, cleanliness between coats, and application conditions. Prepare defective area in accordance with SSPC SP 10, and

feather coating as required to leave 4 inches of each succeeding coat feathered and abraded. Protect adjacent areas from damage and overspray. Remove dust and solvent wipe the prepared area plus an additional 4 inches beyond the prepared area with clean denatured alcohol. Apply each coat within RECOAT WINDOW of preceeding coat. Within four hours of preparation, apply zinc-rich primer to prepared steel and feather onto prepared primer. Apply intermediate coat to primed area and feather to prepared intermediate area. Apply topcoat to intermediate coat and feather to prepared topcoat. Apply each repair coat to approximate thickness of surrounding coating system.

3.5.2.7 Structure Occupancy After Coating Application

Use clean canvas or other approved shoe covers when walking on coated surfaces, regardless of curing time allowed. For heavily trafficked areas, provide cushioned mats for additional protection.

3.6 FIELD TESTS AND INSPECTION

For marking of tank surfaces, use chalk for marking bare steel, and water based markers for marking coated surfaces, and remove marks prior to coating. Do not use any wax or grease based markers, or any other markers that leave a residue or stain.

3.6.1 Coating Inspector

The coating inspector shall be considered a QC Specialist, shall work for the QC Manager, and shall be qualified in accordance with Section 01451, CONTRACTOR QUALITY CONTROL. The Coating Inspector shall be present during all pre-preparation testing, surface preparation, coating application, initial cure of the coating system, and during all coating repair work. The Coating Inspector shall provide complete documentation of conditions and occurrences on the job site, and be aware of conditions and occurrences that are potentially detrimental to the coating system. The requirements for inspection listed in this Section are in addition to the QC inspection and reporting requirements outlined in Section 01451, CONTRACTOR QUALITY CONTROL. The Coating Inspector shall prepare a project reference sheet outlining all requirements, tests, test methods, and evaluation criteria, and hold regular meetings with Contractor personnel, including nozzlemen and applicators, to review requirements and evaluation criteria for upcoming work in advance of the work.

3.6.2 Field Inspection

3.6.2.1 Inspection Requirements

Accomplish field inspection in accordance with ASTM D 3276 and as required herein. Perform all appropriate tests and inspections, except that viscosity and weight per gallon measurements are not required. Provide all tools and instruments required to perform the required testing, as well as any tools or instruments that the inspector considers necessary to perform the required inspections and tests. Document each inspection and test, including required hold points and other required inspections and tests, as well as those inspections and tests deemed prudent from on-site evaluation,

as follows:

a. Location or area;

b. Purpose (required or special);

c. Method;

d. Criteria for evaluation;

e. Results;

f. Determination of compliance;

g. List of required rework;

h. Observations.

Collect and record Environmental Conditions as described in ASTM D 3276 on a 24 hour basis, as follows:

a. During surface preparation, every two hours or when changes occur;

b. During coating application and the first four days of initial cure, every hour, or when changes occur;

c. Overnight hours may be excluded if conditions are measured and recorded through 1800 hours and then prior to dawn the next day;

d. Note location, time, and temperature of the highest and lowest surface temperatures each day;

e. Use a non-contact thermometer to locate temperature extremes, then verify with contact thermometers.

Document all equipment used in inspections and testing, including manufacturer, model number, serial number, last calibration date and future calibration date, and results of on-site calibration performed.

3.6.2.2 Daily Inspection Reports

Submit one copy of daily inspection report completed each day when performing work under this Section, to the Contracting Officer. Use ASTM D 3276 Appendix X1 Inspection Checklist to monitor daily activity and prepare Daily Inspection Report. Use of forms containing entry blocks for all required data is encouraged. The data may be in any format, but must be legible and presented so that it can be easily interpreted. Note all non-compliance issues, and all issues that were reported for rework in accordance with QC procedures of Section 01451 CONTRACTOR QUALITY CONTROL. Submit report within 24 hours of date recorded on the report.

3.6.2.3 Inspection Logbook

A continuous record of all activity related to this Section shall be

maintained in an Inspection Logbook on a daily basis. The logbook shall be hard or spiral bound with consecutively numbered pages, and shall be used to record all information provided in the Daily Inspection Reports, as well as other pertinent observations and information. The Coating Inspector's Logbook that is sold by NACE is satisfactory. Submit the original Inspection Logbook to the Contracting Officer upon completion of the project and prior to final payment.

3.6.2.4 Inspection Equipment

All equipment shall be in good condition, operational within its design range, and calibrated as required by the specified standard for use of each device.

3.6.3 Hold Points for Quality Control Inspections

Provide appropriate QC inspections at the following hold-points:

Step	Action
Prior to preparation of structure(s) for cleaning and repair	1. Safety inspection
After cleaning of structure(s) and prior to abrasive blasting	1. Safety inspection, removal of dirt, trash, debris, and any hindrance to abrasive blasting. 2. Surface inspection for oil, grease, soluble salts, or other contaminants
Initiation of abrasive blasting, and at each work stoppage	1. Confirm environmental conditions are suitable for abrasive blasting and coating, and are expected to remain suitable to the point where the coating will be unaffected. 2. Surface inspection to insure all aspects of surface preparation are properly addressed, as specified in article entitled "Surface Preparation." 3. Test compressor air for oil and water contamination
After abrasive blasting	1. Surface inspection to insure all aspects of surface preparation are properly addressed, as specified in article entitled "Surface Preparation."
Immediately prior to coating application - provide for each coating application evolution	1. Confirm environmental conditions are suitable for coating application and are expected to remain suitable to the point where the coating will be unaffected. 2. Surface inspection to insure all aspects

	of surface preparation are properly addressed, as specified in article entitled "Surface Preparation."
	3. Confirm that testing equipment for monitoring for hazardous conditions during coating application are working properly and are prepared for use as outlined in Contractor's Safety Plan.
During and after coating application.	1. Coating application inspection per paragraphs entitled "Application of Coating System" and "Field Tests and Inspection".
After final cleanup	1. Clean-up inspection specified in the

paragraph entitled "Final Cleanup."

3.7 FINAL CLEANUP

Following completion of the work, remove debris, equipment, and materials from the site. Remove temporary connections to Government or Contractor furnished water and electrical services. Restore existing facilities in and around the work areas to their original condition.

TABLE 1

COATING QUALITY CONFORMANCE INSPECTION REQUIREMENTS

Table Ia - Zinc-rich Epoxy Primer Coat MIL-DTL-24441/19 Formula 159

Test	Component A		Component B		Mixed	
	Min.	Max.	Min.	Max.	Min.	Max.
Pigment content, percent (zinc dust)	---	---	81.5	85.5	---	---
Volatiles, percent	42.8	44.3	8.0	8.4	---	---
Non-volatile vehicle percent	53.7	57.7	8.3	8.7	---	---
Weight,						
Kilograms/liter	0.87	1.01	3.30	3.40	---	---
Pounds/gallon	7.3	8.4	27.5	28.4	---	---
Flashpoint						
Degrees C	35.6	---	37.8	---	---	---
Degrees F	96	---	100	---	---	---
Consistency, grams	---	---	250	500	---	---
Set to touch time, hours at 23 degrees C, 73 degrees F	---	---	---	---	---	2
Dry-hard time, hours at 23 degrees C, 73 degrees F	---	---	---	---	---	8
Pot life, hours at 23 degrees C, 73 degrees F	---	---	---	---	4	---
Sag resistance						
Micrometers	---	---	---	---	300	---
Mils	---	---	---	---	12	---
VOC						
Grams/liter	---	---	---	---	---	304
Pounds/gallon	---	---	---	---	---	2.5

NOTES:
Test methods as specified in MIL-DTL-24441.

TABLE 1

COATING QUALITY CONFORMANCE INSPECTION REQUIREMENTS

Table Ib. - Epoxy Intermediate Coat MIL-DTL-24441/31 Formula 152 Type IV (White (Tinted))

Test	Component A		Component B		Mixed	
	Min.	Max.	Min.	Max.	Min.	Max.
Pigment content, percent	44.0	49.0	33.0	38.0	---	---
Volatiles, percent	29.0	35.0	16.0	21.0	---	---
Non-volatile vehicle, percent	17.5	23.5	44.0	49.0	---	---
Coarse particles, percent	---	0.3	---	0.3	---	---
Consistency, grams	180	320	300	470	---	---
Weight						
Kilograms/liter	1.39	1.45	1.29	1.35	---	---
Pounds per gallon	11.6	12.1	10.8	11.3	---	---
Set to touch, hours at 23 degrees C, 73 degrees F	---	---	---	---	---	3
Dry-hard time, hours at 23 degrees C, 73 degrees F	---	---	---	---	---	8
Fineness of grind, Hegman	4	---	4	---	---	---
Flashpoint						
Degrees C	35.5	---	37.8	---	---	---
Degrees F	96	---	100	---	---	---
Titanium dioxide, percent of pigment	91	---	---	---	---	---
Pot life, hours at 23 degrees C, 73 degrees F	---	---	---	---	4	---
Sag resistance						
Micrometers	---	---	---	---	300	---
Mils	---	---	---	---	12	---
Color of dry film to approximate color of color 27778	---	---	---	---	Conform	
Contrast ratio, at 75 micrometers, 3 mils DFT	---	---	---	---	0.98	---
VOC						
Grams/liter	---	---	---	---	---	340
Pounds/gallon	---	---	---	---	---	2.8

GENERAL NOTES:
Test methods as specified in MIL-DTL-24441.
Where "Conform" is indicated, refer to specific requirements of MIL-DTL-24441/31.

TABLE 1

COATING QUALITY CONFORMANCE INSPECTION REQUIREMENTS

Table Ic - Polyurethane Topcoat MIL-PRF-85285 Type II
(White and Colors)

Test	Component A		Component B		Mixed	
	Min.	Max.	Min.	Max.	Min.	Max.
Moisture content, percent	---	1	---	---	---	---
Coarse particles, percent	---	---	---	---	---	.5
Viscosity	---	---	---	---	See Note 1	
Fineness of grind, Hegman	---	---	---	---	7	---
Drying to touch (See Note 2)	---	---	---	---	---	4
Dry hard (See Note 2)	---	---	---	---	---	8
VOC, grams per liter	---	---	---	---	---	340
Color	---	---	---	---	delta E+-1.0	
Gloss 60 degree specular gloss						
Gloss	---	---	---	---	---	90
Semi-gloss	---	---	---	---	15	45
Opacity	---	---	---	---	0.95	---
Flexibility	---	---	---	---	Conform	
Fluid resistance	---	---	---	---	Conform	
Heat resistance (cure)	---	---	---	---	Conform	
Solvent resistance (cure)	---	---	---	---	Conform	
Condition in container	---	---	---	---	Conform	
Odor	---	---	---	---	Conform	
Lead percent	---	---	---	---	---	0.06
Cadmium percent	---	---	---	---	---	0.06
Chromium percent	---	---	---	---	---	0.00

NOTES:
(1) Modify paragraph 3.6.4 Viscosity and Pot Life, of MIL-PRF-85285 as follows:

The viscosity of the admixed coating, when tested in accordance with ASTM D 1200 through a No. 4 Ford cup, shall be as follows:

Time from mix (minimum)	Maximum time through a No. 4 Ford cup
Initially	30 seconds
2 hours	60 seconds
4 hours	No gel

(2) Modify paragraph 3.7.1 Drying Time, of MIL-PRF-85285

When applied by spray techniques and when tested in accordance with ASTM D 1640, the coating shall be set-to-touch within four hours and dry-hard within eight hours (see 4.6 and table I).

GENERAL NOTES:

- Test methods as specified in MIL-PRF-85285.
- Where "Conform" is indicated, refer to specific requirements of MIL-PRF-85285.

-- End of Section --

SECTION TABLE OF CONTENTS

DIVISION 11 - EQUIPMENT

SECTION 11212

PUMPS: WATER DISTRIBUTION PUMPING STATION

PART 1 GENERAL

1.1 REFERENCES
1.2 DEFINITIONS
1.3 SCOPE
1.4 GENERAL REQUIREMENTS
1.4.1 Standard Products
1.4.2 Nameplates
1.4.3 Verification of Dimensions
1.5 SUBMITTALS
1.6 DELIVERY AND STORAGE

PART 2 PRODUCTS

2.1 PUMP AND MOTOR REQUIREMENTS
2.1.1 Type of Installation
2.2 PUMP PERFORMANCE
2.3 WATER DISTRIBUTION PUMPS (P-40-1-1, P-40-1-2, P-50-1-1, P-50-1-2)
2.3.1 Discharge Head
2.3.1.1 Pump Driver
2.3.2 Water-Lubricated Column and Shaft Assembly
2.3.2.1 Lubrication
2.3.3 Pump Bowl Assembly
2.3.3.1 Pump Bowls
2.3.3.2 Impellers
2.3.3.3 Pump Shafts
2.3.3.4 Bearings
2.3.4 Suction Bell and Strainer
2.4 WATER DISTRIBUTION MAINTENANCE PUMPS (P-40-1-3, P-50-1-3)
2.4.1 Pump Driver
2.4.1.1 General
2.4.1.2 Horsepower Rating
2.4.1.3 Service Factor
2.4.1.4 Voltage and Frequency Rating
2.4.1.5 Locked Rotor Ratings
2.4.1.6 Balance and Vibration Control
2.4.1.7 Nameplates
2.4.1.8 Special Motors
2.4.2 Pump Head Assembly
2.4.3 Pump Bowl Assembly
2.4.3.1 Pump Bowls
2.4.3.2 Impellers
2.4.3.3 Pump Shafts
2.4.3.4 Bearings
2.4.3.5 Pump Basket Strainer

2.4.4 Discharge Pipe
2.4.5 Check Valves
2.4.6 Isolation Valves
2.5 PUMP ACCESSORIES
2.5.1 Water-Level Indicator Assembly
2.5.1.1 Electrode Indicator
2.5.2 Pressure Gauge
2.5.3 Air-Vent
2.6 PUMP SKID ACCESSORIES
2.7 ELECTRICAL
2.7.1 Scope
2.7.2 Power Distribution and Control Enclosure
2.7.3 Codes
2.7.4 Lightning and Surge Arrester
2.7.5 Main disconnect
2.7.6 Control Power
2.7.7 Skid Conduit
2.7.8 Skid Grounding
2.7.9 Junction Boxes
2.8 ADJUSTABLE FREQUENCY DRIVES
2.8.1 System Description
2.8.2 Spare Parts
2.8.3 Service Conditions
2.8.4 Components
2.8.5 Factory Finishing
2.8.6 Source Quality Control
2.8.7 Field Quality Control
2.9 MOTOR CONTROL
2.9.1 General
2.9.2 Combination Full-Voltage, Magnetic Starter
2.10 STATION CONTROLS
2.10.1 Scope
2.11 EQUIPMENT APPURTENANCES
2.11.1 Attachments
2.11.2 Shop Painting

PART 3 EXECUTION

3.1 INSTALLATION
3.1.1 General
3.1.2 Unloading and Setting Supervision
3.1.3 Station Base
3.2 PAINTING AND FINISHING
3.3 TESTING
3.3.1 Factory Pump Test
3.3.2 Field Equipment Test
3.3.2.1 Correct Installation of Appurtenances
3.3.2.2 Deficiencies
3.4 MANUFACTURER'S FIELD SERVICES
3.5 FIELD TRAINING
3.6 POSTED INSTRUCTIONS
3.7 PUMP VALVES
3.7.1 Pump Discharge Isolation Valves
3.7.2 Station Discharge Isolation Valve

3.7.3 Pressure Relief Valve
3.8 ELECTRICAL
3.8.1 Pressure Transducer
3.8.2 Flow Meter (Magnetic)
3.8.3 Primary Head
3.8.4 Signal Converter
3.8.4.1 Grounding Rings
3.8.4.2 Calibration and Testing
3.8.5 Controls
3.8.6 Alarms and shutdowns
3.8.7 Individual Motor Phase
3.8.8 Operator Interface Device (OID)
3.8.9 Operation
3.8.10 Remote Disabling of Pumps from Project Control System
3.8.11 Instrument Enclosures and Intrinsically Safe Circuits
3.9 GENERAL
3.9.1 Start Up
3.10 WARRANTY
3.10.1 Scope
3.10.2 Warranty
3.11 REMOTE MONITORING AND CONTROL PACKAGE
3.11.1 Scope
3.11.2 Remote Pumping Station Control and Monitoring
3.12 SKID MOUNTED AND CONTROL INTEGRATED EQUIPMENT
3.12.1 Scope
3.12.2 Autoflush Wye Strainer
3.12.3 Inline Filter
3.12.4 Lake Level Controls - AC
3.12.5 Power Zone
3.12.6 Inside Panel Lighting Package
3.13 ADDITIONAL EQUIPMENT
3.13.1 Scope
3.13.2 Automatic Rotating Lake Screen
3.13.3 Discharge Dog Leg

-- End of Section Table of Contents --

SECTION 11212

PUMPS: WATER DISTRIBUTION PUMPING STATION

PART 1 GENERAL

1.1 REFERENCES

The publications listed below form a part of this specification to the extent referenced. The publications are referred to in the text by basic designation only.

AMERICAN NATIONAL STANDARDS INSTITUTE (ANSI)

ANSI B16.5	(1996) Pipe Flanges & Flanged Fittings

ASTM INTERNATIONAL (ASTM)

ASTM A 105/A 105M	(2001) Carbon Steel Forgings for Piping Applications
ASTM A 123/A 123M	(2001a) Zinc (Hot-Dip Galvanized) Coatings on Iron and Steel Products
ASTM A 126	(2001) Gray Iron Castings for Valves, Flanges, and Pipe Fittings
ASTM A 153/A 153M	(2001a) Zinc Coating (Hot-Dip) on Iron and Steel Hardware
ASTM A 307	(2000) Carbon Steel Bolts and Studs, 60 000 PSI Tensile Strength

AMERICAN WATER WORKS ASSOCIATION (AWWA)

AWWA E101	(1988) Vertical Turbine Pumps - Line Shaft and Submersible Types

ASME INTERNATIONAL (ASME)

ASME B1.1	(1989; R 2001) Unified Inch Screw Threads (UN and UNR Thread Form)

INSTITUTE OF ELECTRICAL AND ELECTRONICS ENGINEERS (IEEE)

IEEE C62.41	(1991) Recommended Practice for Surge Voltages in Low-Voltage AC Power Circuits
IEEE Std 519	(1992) Recommended Practices and Requirements for Harmonics Control in Electrical Power Systems

NATIONAL ELECTRICAL MANUFACTURERS ASSOCIATION (NEMA)

NEMA CP 1	(2000) Shunt Capacitors
NEMA ICS 2	(2002) Industrial Control and Systems Controllers, Contactors, and Overload Relays Rated Not More Than 2,000 Volts AC or 750 Volts DC
NEMA MG 1	(1998) Motors and Generators
NEMA MG 13	Frame Assignments for Alternating Current Integral Horsepower Induction Motors
NEMA WC 57	(1995) Control Cables

NATIONAL FIRE PROTECTION ASSOCIATION (NFPA)

NFPA 70	(2002) National Electrical Code
NFPA 79	(2002) Electrical Standard for Industrial Machinery

STEEL STRUCTURES PAINTING COUNCIL (SSPC)

SSPC-10	(1997) Manufactured or Re-Manufactured Steel Abrasives

UNDERWRITERS LABORATORIES (UL)

UL 1	(2000) Flexible Metal Conduit
UL 674	(1994; Rev thru Oct 1998) Electric Motors and Generators for Use in Division 1 Hazardous (Classified) Locations

1.2 DEFINITIONS

a. Terms that may be used in this section:

1. AFD: Adjustable frequency drive.
2. CMOS: Complementary metal oxide semiconductor.
3. GTO: Gate Turn-Off Thyristor.
4. MTBF: Mean time between failure.
5. PWM: Pulse width modulation.
6. ROM: Read only memory.
7. RTD: Resistance temperature detector.
8. Rated Load: Load specified for the equipment.
9. Rated Speed: Nominal rated (100 percent) speed specified for the equipment.
10. TDD: Total demand distortion.
11. THD: Total harmonic distortion.
l2. TTL: Transistor-transistor-logic.

1.3 SCOPE

a. a. Provide two distribution pumping stations (one located at 7th Ave and one located at 7th St), a complete package system on a skid which shall include the following:.

   1. Two Water Distribution Pumps
   2. One Water Distribution Maintenance Pump

b. Each package system shall include pumps, motors, adjustable frequency drives (two total, one per each water distribution pump), one water distribution maintenance pump, mechanical, electrical and control systems and all valves, piping, appurtanences, piping supports specified herein.

c. Each control system shall include a programmable logic controller (PLC). Program the PLC to automatically control the three pumps. Provide I/O modules for the required signal interface for all three pumps.

d. Contractor shall design, install, train, and provide Drawings which shall be sealed by a licensed Engineer in the State of Arizona.

1.4 GENERAL REQUIREMENTS

1.4.1 Standard Products

Material and equipment shall be the standard products of a manufacturer with at least 10 years experience in the manufacture of the vertical turbine pumps and irrigation pumping stations products and shall essentially duplicate items that have been in satisfactory use for at least 2 years prior to bid opening. Equipment shall be supported by a service organization that is, in the opinion of the Contracting Officer, reasonably convenient to the site. Pumps of the same type shall be the product of one manufacturer.

1.4.2 Nameplates

Each major item of equipment shall have the manufacturer's name, address, type or style, model, serial number, and catalog number on a plate secured to the item of equipment. Submersible pumps and motors shall also have identical nameplates affixed in a conspicuous place to the discharge piping. In addition, the nameplate for each pump shall show the capacity in gallons per minute at rated head in feet and speed in revolutions per minute. Nameplate for each electric motor shall show the horsepower, speed in revolutions per minute, full load current, voltage, frequency, phases, time rating, maximum ambient temperature, insulation class code letter, and service factor.

1.4.3 Verification of Dimensions

The Contractor shall become familiar with all details of the work, verify all dimensions in the fields and shall advise the Contracting Officer of

any discrepancy before performing the work.

1.5 SUBMITTALS

Government approval is required for submittals with a "G" designation; submittals not having a "G" designation are for information only. When used, a designation following the "G" designation identifies the office that will review the submittal for the Government. The following shall be submitted in accordance with Section 01330 SUBMITTAL PROCEDURES:

SD-02 Shop Drawings

Adjustable Frequency Drives; G, RE

Submittal shall include, as a minimum, the following information:

1. Overall drive system operating data, including efficiencies, input currents, and power factors, at driven equipment actual load and rated system input voltage, at 0, 40, 60, 80, 100, and 110 percent of rated speed.

2. Calculated individual and total harmonic content (voltage and current) reflected in system normal source supply, at the PCC1 shown and under the following load conditions: actual drive-operated loads at 50 percent and 100 percent of rated speed, and all non-drive loads as shown. Normal source system short-circuit current available at drive shall be calculated from the data furnished in the Supplement to this section shown. Use TDD and THD factors as defined in IEEE Std 519 to designate total harmonic content.

3. AFD output pulse maximum peak voltage, pulse rise time and pulse rate of rise, including any justification for proposed deviation from specified values. Include motor manufacturer's certification that motor insulation will withstand long-term overvoltages caused at motor terminals due to specified output pulse data or any proposed deviation from this data.

4. Data on the shelf life of "DC link" capacitor.

5. Complete adjustable frequency drive rating, including all name plate data, continuous operation load capability throughout speed range of 0 to 120 percent of rated speed and coordinated with motor full load nameplate current rating; list any controller special features being supplied.

6. Controller, reactor, harmonic filter, and isolating transformer (if applicable) dimension drawings; information on size and location of space for incoming and outgoing conduits.

7. Maximum heat dissipation from enclosure(s) and details of any cooling provisions.

8. Should separate enclosures and equipment be necessary for

filter elements provide complete dimensional information including location of space for incoming and outgoing conduit, weight, maximum heat loss, and minimum current carrying capacity and recommended wire sizes for required interconnecting circuits. Filter, drive, and transformer enclosures must fit within space provided on the Drawings.

9. Outline and arrangement Drawings for all enclosures, showing internal and external layout of devices, wiring, terminal blocks, etc. Information on size and location of space for incoming and outgoing conduit.

10. Layout of controller face showing keypads, displays, pushbuttons, switches, instruments, indicating lights, etc.

11. Complete system operating description.

12. Complete system schematic (elementary) wiring diagrams. Coordinate control requirements with the P&IDs.

13. Complete system interconnection diagrams showing terminal blocks for interface with drive motor and all related components or controls external to system, including wire numbers and terminal board point identification.

14. One-line diagram of system, including component ratings.

15. Description of diagnostic features being provided.

16. Descriptive literature for all control and interface devices such as relays, timers, communication or signal input modules, etc.

17. Itemized bill-of-materials listing all system components.

18. Specific description of provisions, such as isolation, conditioning, or harmonic suppression, being made to ensure proper system operation.

19. Outline Drawings of the pump showing dimensions, make, model, and weight of each pump/motor.

20. Nameplate data in accordance with NEMA MG 1.

21. Provide rating information including service factor, locked rotor current, no load current, guaranteed minimum full load efficiency and power factor.

22. Enclosure type and mounting (e.g. horizontal, vertical).

23. Conduit box dimensions and usable volume as defined in NEMA MG 1 and NFPA 70.

24. Bearing type, bearing lubrication, and bearing life

calculations.

25. Space heater voltage and watts.

26. Description and rating of motor thermal protection.

27. Motor sound power level in accordance with NEMA MG 1.

28. Maximum brake horsepower required by motor.

29. Description and rating of submersible motor moisture and temperature sensing system.

30. To uniquely identify process equipment and instrumentation, show tag numbers on all applicable submittal Drawings and descriptive literature.

31. Calculations showing pipe support system design. Pipe supports shall meet the requirements of Section 15060, PIPING SUPPORT SYSTEMS.

Installation

Detail Drawings consisting of a complete list of equipment and materials. Detail Drawings containing complete wiring and schematic diagrams and any other details required to demonstrate that the system has been coordinated and will properly function as a unit. Drawings shall show proposed layout, support and anchorage of equipment and appurtenances, and equipment relationship to other parts of the work including clearances for maintenance and operation.

SD-03 Product Data

Water Distribution Pumps; G, RE

Manufacturer's descriptive data and technical literature, performance charts and curves, catalog cuts, and installation instructions. Curves shall show head capacity, horsepower demand and pump performance efficiency over the entire operating range of the pump(s).

Proposed diagrams, instructions, and other sheets, prior to posting. Diagrams shall include details showing equipment dimensions, size, and locations of connections and weights of associated equipment.

Spare parts data for each different item of material and equipment specified, after approval of the detail Drawings and not later than two months prior to the date of beneficial occupancy. Data shall include a complete list of parts and supplies, with current unit prices and source of supply, and a list of the parts recommended by the manufacturer to be replaced after 3 year(s) of service.

SD-06 Test Reports

Factory Test Report; G, RE

Within 30 days of receipt of approval of the witnessed field test, submit nine bound copies of a report covering test setup and performance tests. The factory test report shall include the specified information.

Field Test Report; G, RE

Submit five (5) copies of the field test report.

Submit the installation report and Manufacturer's Certificate of Proper Installation.

SD-08 Manufacturer's Instructions:

Manufacturer's Written Instructions

Submittal shall include, as a minimum, the following information:

1. Statement of Supplier qualifications.

2. Statement of pipe welder's qualifications.

3. Factory functional test reports.

4. Special shipping, storage and protection, and handling instructions.

5. Manufacturer's printed installation instructions.

6. Field test reports.

7. Manufacturer's Certificate of Proper Installation.

8. Suggested spare parts list to maintain equipment in service for a period of 1 year. Include a list of special tools required for checking, testing, parts replacement, and maintenance with current price information.

9. List special tools, materials, and supplies furnished with equipment for use prior to and during startup and for future maintenance.

SD-10 Operation and Maintenance Data

Vertical Turbine and Submersible Pumping Units

Ten complete copies of operating manual outlining the step-by-step procedures required for system startup, operation and shutdown. The manual shall include a table of contents the

manufacturer's name, model number, service manual, parts list, and brief description of all equipment and their basic operating features. Ten complete copies of maintenance manual listing routine maintenance procedures, possible breakdowns and repairs, and troubleshooting guide. The manuals shall include simplified wiring, layout, and control diagrams of the system as installed. Each manual shall be tabbed to match the table of contents.

1.6 DELIVERY AND STORAGE

All equipment delivered and placed in storage shall be stored with protection from the weather, humidity and temperature variations, dirt and dust, or other contaminants. Manufacturer shall deliver all spare parts at one time with each item properly labeled by part number.

PART 2 PRODUCTS

2.1 PUMP AND MOTOR REQUIREMENTS

2.1.1 Type of Installation

The work shall include furnishing, installing, and testing Vertical Turbine and Submersible Pumping Units and their appurtenances as indicated. Pumps shall be installed in a wet well and the electrical motor shall be installed above ground. Line shaft lubrication shall be the pumped water.

2.2 PUMP PERFORMANCE

Pumps shall be capable of discharging quantities of water at maximum pump speed and total pump head with the minimum efficiency indicated. Total pump head in feet shall consist of the pumping level below datum and the static and friction head above datum at design capacity. The sound level produced by each pumping station shall not exceed 55dB when measured at a distance of 1000 feet. Pump criteria is provided on the attached Pump Data Sheets.

2.3 WATER DISTRIBUTION PUMPS (P-40-1-1, P-40-1-2, P-50-1-1, P-50-1-2)

Each Water Distribution pumping station shall be equipped with two line shaft vertical turbine pumps with flow and head defined in the data sheets. The vertical turbine pumps shall be manufactured according to the standards of the Hydraulic Institute. The bowl assembly, column pipe, line-shaft, head shaft, and discharge head shall be of U.S. manufacture. The pumping systems manufacturer shall have a network of service centers which shall have available spare parts and trained pump technicians to handle service, repair and warranty procedures.

2.3.1 Discharge Head

Discharge head shall be of the fabricated steel type with a minimum 60,000 psi tensile strength. The discharge shall have a working pressure of not less than 275 psi and incorporate a 150 ANSI discharge flange. Complete discharge head shall be hydrostatically tested to a minimum of 412 psi. A product lubricated high pressure stuffing box containing at least six rings

of packing and two lantern rings shall be provided. Packing shall be compressed around shaft by an adjustable two-piece gland. Dual bypass tubing shall be included for proper packing lubrication and cooling. The discharge head stuffing box area shall also include a drain which will be piped back to the wet well. Discharge head to be designed to include leakless configuration. Discharge head shall incorporate an integral air separation chamber, allowing air to be discharged through an air release line mounted on top of head. Stuffing box bushing shall be SAE 660 cast iron.

The head shaft shall be of the two piece type, 416 stainless steel and shall be turned and ground. The pump manufacturer shall include a method for adjusting the impeller running clearance at the top of the head shaft. Adequate space shall exist to couple the head shaft and the line shaft above the stuffing box. Coupling shall be extra heavy duty AISI 416 stainless steel with a minimum service factor of 2 to 1.

2.3.1.1 Pump Driver

a. Provide A.C. Induction Motors for the following:

1. Water Distribution Pumps - Quantity (4) Four

b. Vertical Hollow Shaft Motors: Motor(s) for the water distribution pumps shall be of the vertical hollow shaft high thrust design. Motor shall have a TEFC enclosure, 1.15 service factor, and class F insulation. Motors shall be wound for the starting configuration as called out in the technical data sheet. Design pump brake horsepower shall not exceed 87% of motor horsepower exclusive of service factor. Maximum pump run out horsepower shall not be greater than motor rating exclusive of service factor. Motor shall be rated for continuous duty and be designed to carry the maximum thrust load of the pump and will have B10 bearing life of no less than 5 years. Motors shall be rated for proper ambient temperature and proper altitude per motor manufacturers recommendations.

c. Motor Space Heater: The pumping station manufacturer shall provide on each pump motor a 120 volt, single phase space heater of ample size to prevent condensation from occurring within the motor during non-operating periods.

2.3.2 Water-Lubricated Column and Shaft Assembly

Each section of the discharge column shall consist of a column pipe, line shaft with hardened journal surfaces, bearing spiders with bearings spaced not more than 10 feet on centers, and line shaft and discharge column pipe couplings. Stainless steel shaft sleeves shall be furnished at each bearing location. Line shaft bearings shall be bronze and shall be held in place by bronze or other noncorrodible metal bearing retainers.

2.3.2.1 Lubrication

Lubrication of line shaft pumps shall be furnished by the water being

pumped.

2.3.3 Pump Bowl Assembly

Pump bowl assembly shall include the pump bowl, pump impeller, and the pump shaft and bearings and may be of multistage configuration.

2.3.3.1 Pump Bowls

Bowls shall be of close-grained cast-iron and shall have integrally-cast vanes with smooth, streamlined water passageways. The pump bowls shall be lined with porcelain enamel. Suction bowl shall contain a bronze bearing permanently packed with nonsoluble grease and fitted with a sand collar to serve as the bottom bearing of the pump shaft. Casing wearing rings of bronze shall be installed for pumps with enclosed impellers.

2.3.3.2 Impellers

The impellers shall be C83800 bronze and of the enclosed type design. Pump shaft shall be AISI 416 SS turned and ground. The shaft shall be supported by bronze bearings above and below each impeller. The suction bell bearing shall be extra long and permanently greased packed and sealed with a bronze sand collar.

2.3.3.3 Pump Shafts

Pump line shaft shall be AISI 416 SS. The size of the shaft shall be no less than determined by AWWA E101.

2.3.3.4 Bearings

Intermediate bowl bearings shall be water lubricated bronze or fluted rubber. Top bowl bearings and suction case bearings shall be grease packed bronze, water-lubricated bronze. Grease in grease-packed bearings shall be nonwater-soluble hydraulic type permanently sealed against loss. Grease-packed bearings shall be provided with sand caps to prevent intrusion of abrasive particles.

2.3.4 Suction Bell and Strainer

Suction bell length shall be recommended by manufacturer. Suction strainer shall be of the basket type, fabricated from stainless steel.

2.4 WATER DISTRIBUTION MAINTENANCE PUMPS (P-40-1-3, P-50-1-3)

Each Water Distribution Maintenance Pump shall have the capacity to maintain system pressure during non irrigation periods. Each pump shall be of the submersible vertical type with stainless steel housing and stainless steel impeller. The pumps shall be sized to prevent main pump cycling.

2.4.1 Pump Driver

2.4.1.1 General

a. Water Distribution Maintenance Pump: Motor for pressure maintenance pump shall be a stainless steel submersible type.

b. Meet requirements of NEMA MG 1.

c. Frame assignments in accordance with NEMA MG 13.

d. Motors shall be specifically designed for the use and conditions intended, with a NEMA design letter classification to fit the application.

e. Lifting lugs on all motors weighing 100 pounds or more.

f. Operating Conditions:

1. Maximum ambient temperature not greater than 40 degrees C.
2. Motors shall be suitable for operating conditions without any reduction being required in the nameplate rated horsepower or exceeding the rated temperature rise.
3. Overspeed in either direction in accordance with NEMA MG 1.

2.4.1.2 Horsepower Rating

a. As designated in enclosed Submersible Pump Data Sheets.

2.4.1.3 Service Factor

a. 1.15 minimum at rated ambient temperature for pure sine wave.

2.4.1.4 Voltage and Frequency Rating

a. System Frequency: 60-Hz.

b. Voltage Rating: Unless otherwise indicated in motor-driven equipment specifications:

Size	Voltage	Phases
3/4 hp through 300 hp	480	3

c. Suitable for full voltage starting.

d. Suitable for accelerating the connected load with supply voltage at motor starter supply terminals dipping to 90 percent of motor rated voltage.

2.4.1.5 Locked Rotor Ratings

a. Locked rotor kVA Code F or lower if motor horsepower not covered by NEMA MG 1 tables.

b. Safe stall time 12 seconds or greater.

2.4.1.6 Balance and Vibration Control

a. In accordance with NEMA MG 1, Section 7.

2.4.1.7 Nameplates

a. Raised or stamped letters on stainless steel or aluminum.
b. Display all motor data required by NEMA MG 1-10.37 and NEMA MG 1-10.38 in addition to bearing numbers for both bearings.
c. Premium efficiency motor nameplates to also display NEMA nominal efficiency, guaranteed minimum efficiency, full load power factor, and maximum allowable kVAR for power factor correction capacitors.

2.4.1.8 Special Motors

a. Requirements in this article take precedence over conflicting features specified elsewhere in this section.
b. Submersible Pump Motor:

1. At 100 Percent Load:

Submersible Pump Motors

Horsepower	Guaranteed Minimum Efficiency	Guaranteed Minimum Power Factor
3 through 10	80	82

2. Insulation System: Manufacturer's standard Class B or Class F.
3. Motor capable of running dry continuously.
4. Enclosure:
(a) Hermetically sealed, watertight, for continuous submergence up to 65-foot depth.
(b) Listed to meet UL 674 and NFPA 70 requirements for Class 1, Division 1, Group D, Hazardous Atmosphere.
(c) Seals: Tandem mechanical.
5. Bearing and Lubrication:
(a) Permanently sealed and lubricated, replaceable antifriction guide and thrust bearings.
(b) Minimum 40,000 hours L-10 bearing life.
6. Inrush kVA/horsepower no greater than NEMA MG 1 and NFPA 70, Code F.
7. Winding Thermal Protection:
(a) Thermal sensor and switch assembly, one each phase, embedded in stator windings and wired in series.
(b) Switches normally closed, open upon excessive winding temperature, and automatically reclose when temperature has cooled to safe operating level.
(c) Switch contacts rated at 5 amps, 120V ac.
8. Monitoring module with control power transformer, probe test switch and test light, and two independent 120V ac contacts, one opening and one closing when the flux of moisture is detected.
9. Winding thermal protection, moisture detection, and bearing overtemperature specified above may be monitored by a single

device providing two independent 120V ac contacts, one closing and one opening on malfunction.

10. Connecting Cables:

(a) One cable containing power, control, and grounding conductors.

(b) Each cable suitable for hard service, submersible duty with watertight seal where cable enters motor.

(c) Length: As required, 30 feet minimum.

(d) UL 1 listed and sized in accordance with NFPA 70.

2.4.2 Pump Head Assembly

Pump head assembly shall consist of the surface plate from which the vertical discharge pipe is suspended and an elbow or fitting as required for connecting to the piping system. Head assembly shall be provided with eyebolts, lugs, or other means for securing slings to facilitate setting and lifting.

2.4.3 Pump Bowl Assembly

Pump bowl assembly shall include the pump bowls, impellers, shaft, and bearings and may be of multistage configuration.

2.4.3.1 Pump Bowls

Pump bowls shall have fabricated vanes with smooth, streamlined water passageways, and shall be constructed of stainless steel.

2.4.3.2 Impellers

Impellers shall be carefully finished with smooth water passageways and shall not load the prime mover beyond the nameplate rating over the entire performance range of the pump. Impellers shall be of the enclosed type and shall be constructed of stainless steel.

2.4.3.3 Pump Shafts

Pump shafts shall be stainless steel and the pump-motor coupling shall be stainless steel capable of transmitting the required thrust in either direction.

2.4.3.4 Bearings

Radial bearings shall be manufactured of urethane, Thrust bearings shall be located in the pump motor.

2.4.3.5 Pump Basket Strainer

A stainless steel strainer shall be furnished at the pump suction.

2.4.4 Discharge Pipe

Discharge pipe shall be sized as shown. Pipe supports shall be minimum requirements of Section 15060, PIPING SUPPORT SYSTEMS. Piping shall meet

requirements of Section 02510, WATER SUPPLY AND DISTRIBUTION SYSTEM PIPELINES.

2.4.5 Check Valves

Check valves shall be of the silent operating type that begin to close as forward velocity diminishes and be fully closed at zero velocity preventing flow reversal. Check valve to be positive sealing and manufactured of cast bronze with cast bronze poppet, monel spring and stainless steel self locking nut, plus retainer. Provide di-electric unions as required.

2.4.6 Isolation Valves

Isolation valves shall be as described in Paragraph 3.7 herein. Provide di-electric unions as required.

2.5 PUMP ACCESSORIES

2.5.1 Water-Level Indicator Assembly

A low water-level sensor assembly shall be provided for the pumping station. When probe indicates low water level in the wetwell, pump system shall shut down. Once water level returns to acceptable level in wetwell, pump system shall be allowed to restart. Indicator shall be the electrode type.

2.5.1.1 Electrode Indicator

Device shall operate by indicating current flow at the galvanometer when the electrode touches the water surface in the well. Means shall be provided for lowering the electrode, wire, and well cable in the well and reading the water-level depth when the electrode contacts the water surface.

2.5.2 Pressure Gauge

A pressure gauge shall be mounted on the discharge header with a 1/2 inch isolation ball valve. All gauges shall be glycerin silicon filled to reduce wear due to vibration. Accuracy shall be within 2%. Gauge diameter shall be 4 inch - 3-1/2 inch minimum. Range shall be at least 50% higher than the highest pressure attainable from the pumps at shutoff head conditions. Stainless steel back & bronze internal.

2.5.3 Air-Vent

Air-vent with the necessary pipe connections shall be provided to permit the automatic escape of air from the discharge column when the pump is started. Size of the air-vent and piping shall suit the actual requirements of the individual installation and the recommendations of the pump manufacturer.

2.6 PUMP SKID ACCESSORIES

Pump skid accessories are specified in Paragraphs 3.7, 3.8, 3.12 and 3.13 herein.

2.7 ELECTRICAL

2.7.1 Scope

Power supply at 480 V, 3-wire, 3-Phase, 60 Hz will be provided at one point. Provide complete instrumentation and controls, including power and control wiring and associated equipment to automatically start, stop and modulate pump speed(s) to smoothly, efficiently and reliably pump variable flow rates at a constant discharge pressure and shall include all the items specified hereunder and required to make the pumping station functional as specified. Full alarms and safety features needed to protect the equipment and irrigation piping system. Additionally, provide 8-20A, single phase, 120V circuits in the panel provided on the skid, for use by others, as shown on the drawings. Leave at least 20 percent spare breakers on the panel. Provide minimum 15 KVA transformer as shown on the drawings.

2.7.2 Power Distribution and Control Enclosure

Power distribution and controls, including AFD's and starters shall be housed in a NEMA 4 enclosure with integral latches. Panel shall also house the programmable logic controller. Automatically controlled pumps shall have three-position MANUAL-OFF-AUTOMATIC selector switches. Provide a total of three switches. Locate selector switches on the front of each panel CP-40-1(NE 7 AVE) and CP-50-1(SE 7ST). Automatic control shall be implemented by means of a PLC. See Article Controls.The control enclosure should be constructed of 12 gauge steel and the back plate assembly shall be constructed of 12 gauge steel. A control enclosure 60 inch wide and larger shall be 10 gauge or thicker. The enclosure shall be Powder coat painted. All enclosure cut-outs to be done by laser for proper fit, sealing and coating retention. All indicating lights, reset buttons, speed potentiometer, selector switches and the operator interface device shall be mounted on enclosure door and also be rated NEMA 4. All internal components shall be mounted and secured to the removable back plate assembly. A closed type cooling system shall be included to cool the enclosure and reject heat from the AFD. Open type cooling systems allowing outside ambient air to enter the panel are not acceptable. No water line connections shall be permitted inside of the control enclosure. AFD status and internal parameters must be viewable without the opening of the enclosure door.

2.7.3 Codes

The power distribution and control panel with controls shall be built in accordance with NFPA 70, City of Phoenix, Arizona State and local installation codes and U.L. standards. The pumping station including electrical components and enclosure shall be labeled as a complete U.L. listed assembly with manufacturer's U.L. label applied to the pumping station. All equipment and wiring shall be mounted within the enclosure and labeled for proper identification. All adjustments and maintenance shall be able to be done from the front of the control enclosure. A complete wiring circuit and legend with all terminals, components, and wiring identification shall be provided. Main disconnect shall be interlocked with door. Cabinet to be lockable. Provisions shall be made to

padlock main disconnect, circuit breakers for each motor, AFD, and other equipment in OFF position.

2.7.4 Lightning and Surge Arrester

All electrical equipment shall be protected by a U.L. Listed approved Category C and Category B surge arrester to suppress voltage surges on incoming power. The device under IEEE C62.41 Category C will withstand a impulse of 10Kv/10Ka and Category B to withstand a ringwave of 6Kv/500a and a impulse of 6Kv/3Ka. Pass voltage for a 480v device to the end equipment shall not exceed 1500V-1800V when subjected to a 8ms * 20ms waveshape resulting in the following performance statistics: 3720 joules minimum with a power dissipation of 82,500,000VA at 1800V maximum pass voltage to the protected equipment. Response time shall be less that 5 nanoseconds.

2.7.5 Main disconnect

A non-fusible main disconnect shall be provided to completely isolate all controls and motor starting equipment from incoming power. Main disconnect shall have a through the door operator, and shall be sized as shown in the technical data sheet including horsepower rating. Disconnect shall not be rated as a service disconnect.

2.7.6 Control Power

Power for the controls shall be provided by a control power transformer which will provide low voltage, single phase power for the pumping system control operation. Control power transformer shall not be used for any other external load. The control power transformer shall be protected on the primary and secondary side by current limiting fuses of adequate size and voltage rating. All control components will be protected by time delay circuit breakers of adequate size.

2.7.7 Skid Conduit

All on skid conduit shall be liquid tight flexible metal conduit with water tight connections at enclosure and termination device. All conduit shall be fastened to the skid every 24 inches.

2.7.8 Skid Grounding

Provide grounding lugs on the skids for connections to ground grid at the location shown on Electrical Drawings.

2.7.9 Junction Boxes

All off skid devices requiring control interface shall be terminated in a junction box. This junction box shall be located at the skid edge nearest the installation point of the off skid device. Provide terminations in a NEMA 4 junction box located on the top left side of the main controls enclosure to allow end user connection.

2.8 ADJUSTABLE FREQUENCY DRIVES

Provide adjustable frequency drive systems, one for each Water Distribution Pump.

2.8.1 System Description

a. Adjustable frequency drives and any harmonic conditioning equipment shall be furnished complete, as shown and as specified, and ready for operation. All specified harmonic distortion limits must be met.

b. Current and voltage harmonic distortion under operation from utility sources shall be controlled within the specified limits.

c. Performance Requirements:

1. Rated Continuous Operation Capacity: Not less than 1.15 times full load current rating of driven motor, as indicated on the motor nameplates, and suitable for continuous operation at any continuous overload which may be imposed on motor by driven equipment operating over specified speed range.
2. Application of High-Pulse-Equivalent-Rectifier Drives: Where the proposed drive equipment's rectifier input operates on a twelve-(12)-pulse basis or higher, effectively eliminating the effects of high magnitude lower-order harmonics, harmonic computations are not required. Furnish test documentation that demonstrates minimal harmonic distortion levels of the proposed equipment under similar conditions of operation.
3. Basis for Harmonic Computations: Using One-Line Diagram for current and voltage distortion computations (see Drawings), furnish harmonic filters, line reactors, isolation transformers, or higher pulse converter arrangements required, to meet current/voltage distortion limits.
4. Normal Current Source Harmonic Distortion:
(a) Compute normal source individual and total current harmonic distortion at the location identified as PCC1, in accordance with IEEE Std 519. Refer to Drawings E-9 and E-11 for location of PCC1.
(b) For harmonic computations, assume all drives running except those shown as standby.
5. Normal Source Voltage Harmonic Distortion: Compute normal source voltage harmonic distortion at location identified as PCC1. THD shall not exceed 5 percent, and individual voltage harmonic distortion shall not exceed 3 percent.
6. Furnish isolating transformers or series reactors, harmonic filters, or other devices necessary for proper system operation. Furnish necessary devices and circuits to prevent operation of one drive from adversely affecting operation of other drives, supplied from same transformer or same bus.
7. Additional features and components have been specified for the purposes of limiting input current/voltage distortion, isolating the drive inputs from incoming power transient conditions, preventing the output of a drive from adversely affecting its connected motor, and preventing the output of a drive from adversely affecting circuits or devices connected to drive signal or communication interfaces.

8. When isolation transformers are used, design to meet K-factor requirements of drive(s) connected.

d. Design Requirements:

1. Design and provide drive system consisting of adjustable frequency controller, auxiliary items, and components necessary for complete operating system.
2. Other equipment is being powered from same bus as adjustable frequency drives. Ensure proper operation of drives and other loads under normal conditions.
3. Furnish AFDs rated on basis of actual motor full load nameplate current rating.
4. Drive System: Convert incoming three-phase, 60-Hz AC power to variable voltage, adjustable frequency output for adjustable speed operation of a standard AC induction squirrel-cage motor, using the pulse-width-modulation (PWM) technique to produce the adjustable frequency output.
5. System rated for continuous industrial duty and suitable for use with NEMA MG 1, Design B motors. Motors are specified as inverter duty.
6. Drive rating shall be based upon the specified carrier frequency. AFD variable torque load rating shall equal or exceed the driven motor's nameplate horsepower rating. Units shall be rated for continuous industrial duty and suitable for use with the motors being supplied.
7. Incoming Line Reactor: Design to minimize harmonic distortion on incoming power feeder.
8. Provide control and signal inputs, outputs, and interfaces, as specified and as shown.

2.8.2 Spare Parts

a. Furnish for Each Drive Unit:

1. Complete set of components likely to fail in normal service.
2. Printed circuit boards.

b. One Each Type/Size: Input/output interface modules not integral to drive board (if applicable).

c. Six of each type and rating of fuse.

2.8.3 Service Conditions

a. Ambient Operating Temperature: 32 to 104 degrees F.

b. Storage Temperature: Minus 40 to 158 degrees F.

c. Humidity: 0 to 95 percent relative (noncondensing).

d. Altitude: 0 to 4,700 feet.

e. Frequency Stability: Plus or minus 0.1 percent of maximum

frequency.

2.8.4 Components

a. Drive Units:

1. Incorporate a switching power supply operating from a DC bus, to produce a PWM output waveform simulating a sine wave.
2. Current-limiting semiconductor fuses for protection of internal power semiconductors.
3. Employ a diode bridge rectifier providing a constant displacement power factor of 0.95 minimum at all operating speeds and loads.
4. Use transistors for output section, providing a minimum 97 percent drive efficiency at full speed, full load.
5. Employ DC power discharge circuit so that after removal of input power DC link capacitor voltage level will decay below 50 volts DC within 1 minute after de-energizing following NEMA CP 1 and NFPA 79. Design DC link capacitor for a MTBF of 5 years.
6. Operate with an open circuited output.
7. Input Voltage: 460V AC plus or minus 10 percent.
8. Output Voltage: 0 to 460 volts, three-phase, 0 to 66 -Hz, minimum.
9. Maximum peak voltage of PWM AFD output pulse of 1,000 volts, with pulse rise time of not less than 2 microseconds, and a maximum rate of rise of 500 volts per microsecond. Provide user-selectable output pulse (carrier) frequency. Available frequency range shall be 2,000 to 6,000 Hz. AFD rating and performance in the specified application(s) shall be based upon a carrier frequency of 4,000 Hz.
10. Motor Audible Noise Level: When operating throughout speed range of PWM AFD, no more than 3 dBA above that designated in NEMA MG 1 for same motor operated at constant speed with a 60-Hz supply voltage.
11. Short-Time Overload Capacity: 125 percent of rated load in rms current for 1 minute following full load, full speed operation.
12. Equipment Short-Circuit Rating: Suitable for connection to system with maximum source three-phase, bolted fault, short-circuit available of 65,000 amps rms symmetrical at 480 volts.
13. Furnish drives with output current-limiting reactors or filters-mounted within equipment enclosures.
14. Conditioning:
    a) Line reactors or filters may be installed on the top of the drive enclosure. Submit details for approval. Otherwise, install all devices within the drive panel or enclosure.
    b) Power Input: Provide series line reactors of 3 percent nominal reactance.
    c) Signal/Communication Inputs: Provide common mode toroidal chokes on analog and remote I/O inputs.
15. Diagnostics: Comprehensive for drive adjustment and troubleshooting:
    a) Memory battery backup; 100-hour minimum during a power loss.

b) Status messages will not stop drive from running but will prevent it from starting.

c) Fault Condition Messages and History: First fault protection function to be activated, ability to store six successive fault occurrences in order. Minimum faults shall include:

(1) Overcurrent (time and instantaneous).
(2) Overvoltage.
(3) Undervoltage (DC and AC).
(4) Drive overtemperature.
(5) Serial communication fault.
(6) Short-circuit/ground fault (motor and drive).
(7) Motor stalled.
(8) Semiconductor fault.
(9) Microprocessor fault.
(10) Single-phase voltage condition.

16. Drive Protection:

a) Fast-acting semiconductor fuses.
b) Overcurrent, instantaneous overcurrent trip.
c) DC undervoltage protection, 70 percent dropout.
d) DC overvoltage protection, 130 percent pickup.
e) Overtemperature, drive, inverter, converter, and DC link components.
f) Overtemperature, motor, and pump (Type: Thermistor).
g) Single-phase protection.
h) Reset overcurrent protection (manual or automatic reset).
i) Active current limit/torque limit protection.
j) Semiconductor fault protection.
k) Short-circuit/ground fault protection.
l) Serial communication fault protection.
m) Microprocessor fault.
n) Surge protection for transient overvoltage (6,000 volts, 80 joule surge, tested per IEEE C62.41).
o) Visual display of specific fault conditions.

17. Operational Features:

a) Use manufacturer's standard unless otherwise indicated.
b) Programmable response to power loss.
c) Power Loss Ride-through: Output (15 milliseconds minimum at full load), logic and control (0.5 second minimum).
d) Catch a spinning motor on the fly.
e) Process proportional-integral controller.
f) Selectable volts/Hz control.
g) Motor torque-current control for optimized starting and accelerating torque.
h) Selectable acceleration and deceleration profiles.
i) Electronic motor overload protection.
j) Stall protection.
k) Slip compensation.
l) Automatic restart after power return (ability to enable/disable function).
m) Critical frequency lockout (three selectable points minimum, by 1.5-Hz steps in 10-Hz bands, to prevent resonance of system).
n) Drive maintenance system software for complete

programming and diagnostics.

o) Ground fault protection, drive, and motor.

p) Operate with no motor connected to output terminals.

18. Output Isolation Contactor.

b. Rectifier: Three-phase, 12-pulse minimum, full wave diode bridge rectifier to provide a constant DC voltage to the drive's DC bus.

c. Furnish series choke and capacitors on DC bus to reduce ripple in rectifier output and to reduce harmonic distortion reflected into incoming power supply.

d. Controller: Microprocessor-controller PWM inverter to convert to DC voltage to variable voltage, adjustable frequency three-phase AC output. The output voltage shall vary proportionally with the frequency to maintain a constant ratio of volts to hertz up to 60-Hz. Above 60-Hz, the voltage shall remain constant, with the drive operating in a constant horsepower output mode.

e. Enclosure and Electrical:

1. AFD shall be housed in the Power Distribution and Control enclosure as specified in article 3.8.2, completely front accessible, with hinged doors. Enclosure shall not require rear excess.

2. Furnish drive complete with incoming cable termination compartment, padlockable doors, emergency stop pushbutton, alphanumeric keypad/display-type operator interface unit, and operator's controls.

3. Wire drive from above for power and control wiring.

4. Size air cooling system for periodic operation to cool unit with enclosure temperature not to exceed 95 degrees F. A closed type cooling system shall be included to cool the enclosure and reject heat from the Adjustable Frequency Drive. Open type cooling systems allowing outside ambient air to enter the panel are not acceptable. No water line connections shall be permitted inside the control enclosure.

5. Wiring: Bundle stranded copper wiring neatly with nylon tie wraps or with continuous plastic spiral binding. Terminate all incoming and outgoing circuits at numbered terminal blocks identified as shown. Label each terminal for permanent identification of leads. Identify each wire at each end with imprinted mylar adhesive-back wire markers. For wiring across door hinges, use 19-strand, NEMA WC 57 Class C stranding looped for proper twist rather than bending at hinge. Provide connections internal to panels by crimp-on terminals.

6. Selector switches, indicating lights, potentiometers, instruments, protective devices, major system components, etc., shall be identified by means of engraved, laminated nameplates.

7. Provide 120-volt, single-phase, 60-Hz circuits for control power and operator controls from internal control power transformer.

f. Operator Interface and Controls:

1. Controls: Mount drive local controls on interior dead front panel of enclosure. Provide keypad/display-type operator interface unit and control switch for the following operator functions:
   a) Start (when in local mode).
   b) Stop (when in local mode).
   c) Speed increase (when in local mode).
   d) Speed decrease (when in local mode).
   e) Parameter mode selection (recall programmed parameters).
   f) LOCAL/REMOTE control selection. In the LOCAL mode, remote run control and speed control, via digital/analog input or serial interface, shall be locked out.
   g) Manual fault reset, for all faults (except loss of AC input voltage, which is automatic reset upon restoration).
   h) RUN at preset speed.
   i) Parameter lock (password or key switch lockout of changes to parameters).
   j) Start disable (key switch or programmed code).
2. Control circuit disconnect shall be de-energized circuits in units that are not de-energized by main power disconnect device.
3. Provide 120 volts, single-phase, 60-Hz circuits for control power and operator controls from internal control power transformer.
4. Arrange components and circuits such that failure of any single component cannot cause cascading failure(s) of any other component(s).
5. Alphanumeric Display: During normal operation and routine test, the following parameters shall be available:
   a) Motor current (percent of drive rated current).
   b) Output frequency (Hertz).
   c) Output voltage.
   d) Running time.
   e) Local/remote indication.
   f) Status of digital inputs and outputs.
   g) Analog input and output values.
   h) Output motor current per leg.
   i) All test points and configuration parameters.
   j) Adjustable Parameters: Set all drive operating parameters and indicate in a numeric form.
6. Provide start/stop interlocks, motor winding thermostat relay interface, and control of external devices as shown, including all interposing relays.
7. Power Circuits: Provide 120 V single-phase AC circuit for motor space heater. Switch this circuit on when the drive is not running.

g. Signal Interface:

1. Digital Inputs: As shown.
2. Digital Output: Furnish discrete output dry contact closures rated 5 amps at 120V AC.
   a) DRIVE RUNNING.
   b) DRIVE FAULT (with common contact closure for all fault conditions).

c) DRIVE IN REMOTE MODE.
d) DRIVE OFF.

3. Analog Input: When in REMOTE mode, control drive speed from a remote 4 to 20 mA DC signal. Provide adjustment of minimum and maximum motor speed which shall result from this signal. Factory set this adjustment to comply with operating speed range designated in driven equipment specifications. Frequency resolution shall be 0.1 percent of base speed.
4. Analog Output: Furnish two 4 to 20 mA DC signals, proportional to actual frequency, actual load.
5. Serial Communication Interface: Optional.

h. Accessories:

1. Equipment Identification Plate: 16-gauge stainless steel with 1/4 inch die-stamped equipment tag number securely mounted in a readily visible location.
2. Lifting Lugs: Equipment weighing over 100 pounds.

2.8.5 Factory Finishing

a. Enclosure:

1. Primer: One coat of rust-inhibiting coating.
2. Finish:
a) Interior: One coat white enamel.
b) Exterior: One coat manufacturer's standard gray enamel.

2.8.6 Source Quality Control

a. Factory Inspections: Inspect control panels for required construction, electrical connection, and intended function.

b. Factory Tests and Adjustments: Test all equipment actually furnished.

c. Record test data for factory test report.

d. Functional Test: Perform manufacturer's standard, confirming all functions and performance, specified or shown.

2.8.7 Field Quality Control

a. Functional Test:

1. Conduct on each controller.
2. Configure each drive in accordance with Contracting Officer requirements. Provide typewritten tabulation of parameter settings.
3. Inspect controller for electrical supply termination connections, interconnections, proper installation, and quiet operation.
4. Demonstrate operation, configuration, and interfaces.
5. Record test data for field test report.

b. Performance Test:

1. Conduct on each controller.
2. Perform under actual or approved simulated operating conditions. Coordinate with the testing, startup, and adjustment of any associated active harmonic conditioner equipment.
3. Operate for continuous 12-hour period without malfunction.
4. Demonstrate performance by operating the continuous period while varying the application load, as the input conditions allow, to verify system performance.
5. Record test data for field test report.
6. With station load connected to normal utility source and following startup and adjustment of any associated AHC equipment, measure the following to show parameters within specified limits:
   a) Total and individual current harmonic distortion (up to and including 35th harmonic) at locations identified as PCC1 on each One-Line Diagram, under following load conditions:
      (1) All AFDs on that bus running at full load.
      (2) All AFDs on that bus running at half load.
      (3) Half of the AFDs on that bus running at full load.
      (4) Half of the AFDs on that bus running at half load.
   b) Power factor at input side of each drive. Documented verification that power factor is maintained at 95 percent as speed of drive is adjusted from 100 percent to 33 percent.
   c) Voltage THD at locations identified as PCC1 under the following conditions: All AFD's running at full load and half load (except standby drives).

c. Test Equipment:

1. Use Dranetz, Model No. 626-PA, harmonic distortion monitor and Series 626 disturbance analyzer or equivalent instrument to document results. Provide any CT's and PT's required for connection to the instrument.
2. Provide diagnostic plug-in test card, complete with instructions, multiposition selector switch, and meters or built-in diagnostic control panel or ROM-based processor for monitoring AC, DC, and digital signals to assist in troubleshooting and startup of drive.

2.9 MOTOR CONTROL

Motor starter for Water Distribution Maintenance Pump shall be mounted on a single back panel in a single NEMA 4 enclosure as specified in Paragraph 2.6.2 herein. Motor starters shall meet NEMA standards. Motor overload relays shall be NEMA rated class 20 ambient compensated. Circuit breaker or motor circuit protection shall supply short circuit protection to each motor and shall be rated for a minimum 65,000 amp interrupting capacity. Motor over-loads shall be manual reset only. Auto-reset of motor overloads shall not be permitted.

2.9.1 General

Provide a NEMA ICS 2, Class A Combination Full-Voltage, Magnetic Starter for water distribution maintenance pump motor as specified below. Make all adjustments as necessary to wiring, conduit, disconnect devices, motor starters, and branch circuit protection to accommodate motors actually provided under this contract. In each ungrounded phase, provide a thermal overload protection device mounted within the starter unit. Device shall include inverse-time limit characteristic; Class 10, bimetallic overload, adjustable trip heater; standard Class 20 relay trip; and manual reset. Provide a two-winding 120-volt secondary control transformer mounted in the starter. Transformer shall include two current-limiting fuses in the primary circuit and a single fuse in the secondary circuit of the transformer. Controller shall be suitable for use with 75 degrees C wire at full NFPA 70, 75 degrees C ampacity, and shall be rated for use in 45 degree C ambient temperature. Controller shall be fully rated without any de-rating for operation conditions stated above. Equipment finish shall be electrocoated over a rust-inhibiting phosphated base coating.

2.9.2 Combination Full-Voltage, Magnetic Starter

Starter shall be horsepower-rated at 600 volts and UL labeled for 65,000 amperes with overload protection. Unit shall be three-phase, non-reversing, full voltage. Provide Hand/Off/Auto selector switch and a circuit breaker or motor circuit protection as a disconnecting means. Provide red ON and green Off pilot lights and a padlockable operating handle.

2.10 STATION CONTROLS

2.10.1 Scope

To provide complete instrumentation and controls to automatically start, stop and modulate pump speed(s) to smoothly, efficiently and reliably pump variable flow rates at a constant discharge pressure. Full alarms and safety features needed to protect the equipment and irrigation piping system. All electrical controls shall be U.L. Listed as an Industrial Control Device.

2.11 EQUIPMENT APPURTENANCES

2.11.1 Attachments

All necessary bolts, nuts, washers, bolt sleeves, and other types of attachments for the installation of the equipment shall be furnished with the equipment. Bolts shall conform to the requirements of ASTM A 307and nuts shall be hexagonal of the same quality as the bolts used. Threads shall be clean-cut and shall conform to ASME B1.1. Bolts, nuts, and washers specified to be galvanized or not otherwise indicated or specified, shall be zinc coated after being threaded, by the hot-dip process conforming to ASTM A 123/A 123M or ASTM A 153/A 153M as appropriate. Bolts, nuts, and washers specified or indicated to be stainless steel shall be Type 316.

2.11.2 Shop Painting

Structural steel, attached piping, and supports shall be grit-blasted with #50 steel grit per SSPC-10 to a near white metal condition. The cleaned steel surface shall be immediately primed with an industrial grade primer to thickness of 2 1/2 to 3 mils epoxy primer. The finish coat shall be acrylic enamel to a thickness of no less than 3 mils and applied through an electrostatic method to insure proper adhesion. Manufacture shall provide a touch up kit for owners use. Powder coating will not be an accepted paint process since powder coating can not be field applied.

PART 3 EXECUTION

3.1 INSTALLATION

3.1.1 General

Equipment shall be installed with the Manufacturer's Written Instructions and under the direct supervision of the manufacturer's representative and the impellers shall be set by the manufacturer's representative.

3.1.2 Unloading and Setting Supervision

Setting of the pumping station is the responsibility of the manufacturer, unless specifically called out elsewhere in the specification. Crane to off-load and set the pumping station on the concrete slab is to be provided by others.

3.1.3 Station Base

The pumping station base shall be designed and fabricated to provide proper structural support for all attached equipment. The base shall supply sufficient rigidity to withstand the stresses of reasonable and competent transportation to site, off loading, installation, and operation. Main structural members shall be constructed from heavy weight channel or I-beam steel. Provisions shall be made in the station base for off-loading and handling the station at the site of installation. Base shall include 3/16" checkered deck plate and 1 inch steel plate mounted under pump discharge heads. All 3/16 inch deck plate and 1 inch steel plate shall be 100% seal welded to main structural members. Maximum allowable deflection on skid assembly to be 0.1 inch per linear foot. Skip welding is not acceptable. The pump steel skid shall completely cover the wet wall with integral, framed access hatches. Wet well access shall be made of 3/16 inch deck plate.

3.2 PAINTING AND FINISHING

Unless otherwise specified all exposed ferrous metal not factory finished shall be painted as specified in Section 09900 PAINTS AND COATINGS. No factory finished equipment or appurtenances shall be painted except that damaged factory finishes shall be retouched in an acceptable manner with paint obtained from the manufacturer. Nameplates shall not be covered with paint but shall be cleaned and legible at completion of the work.

3.3 TESTING

3.3.1 Factory Pump Test

Factory pump performance test shall be made in conformance with AWWA E101 and test reports shall be provided for the following:

a. Shop inspection.
b. Hydrostatic test of discharge head.

3.3.2 Field Equipment Test

After installation of the pumping units and appurtenances is complete, operating tests shall be carried out to assure that the pumping installation operates properly. The Contractor shall make arrangements to have the manufacturer's representatives present when field equipment tests are made. Each pumping unit shall be given a running field test in the presence of the Contracting Officer for a minimum of 2 hours with each combination of electric motor. Each pumping unit shall be operated at its rated capacity or such other point on its head-capacity curve selected by the Contracting Officer. The Contractor shall provide an accurate and acceptable method of measuring the discharge flow. Each pump motor assembly shall be operated for a minimum of 4 hours at a point of maximum horsepower indicated on the pump head-capacity curve or such other point on the curve selected by the Contracting Officer. Record volts, amps and KW per phase for pumping units, an insulation resistance test of the cable and the motor shall be conducted prior to installation of the pump, during installation of the pump, and after installation is complete. The resistance readings shall be not less than 10 megohms. The Contractor shall conduct a sound level reading at a distance no more than 1000 feet from each pumping station. The average noise level measured at no further than 1000 feet shall not exceed 55 dB when measured on an "A" weighted sound level meter and according to the procedures of the Environmental Protection Agency. The results of all field equipment tests shall be detailed in the test reports.

3.3.2.1 Correct Installation of Appurtenances

Tests shall assure that the units and appurtenances have been installed correctly, that there is no objectionable heating, vibration, or noise from any parts, and that all manual and automatic controls function properly.

3.3.2.2 Deficiencies

If any deficiencies are revealed during any tests, such deficiencies shall be corrected and the tests shall be reconducted.

3.4 MANUFACTURER'S FIELD SERVICES

The Contractor shall obtain the services of a manufacturer's representative experienced in the installation, adjustment, and operation of the equipment specified. The representative shall supervise the installing, adjusting, and testing of the equipment.

3.5 FIELD TRAINING

Contractor shall conduct a training course for the maintenance and operating staff. The training period of 8 hours normal working time shall start after the system is functionally complete but before the final acceptance tests. The training shall include all of the items contained in the operating and maintenance instructions as well as demonstrations of routine maintenance operations. Contracting Officer shall be given at least two weeks advance notice of such training.

3.6 POSTED INSTRUCTIONS

Instructions in laminated plastic, including wiring and control diagrams showing the complete layout of the entire system, shall be posted in the electrical enclosure.

3.7 PUMP VALVES

3.7.1 Pump Discharge Isolation Valves

Pump isolation valves shall be of the butterfly type with grooved ends to provide for expansion and vibration dampening and a lever operator. Lug style isolation valves are not acceptable. They shall be sized as shown in the technical data sheet. Valve body shall be constructed of ductile iron with a polyphenylene sulfide coating. Valve disc is rubber coated ductile iron. Valve shall be rated to 200 PSI.

3.7.2 Station Discharge Isolation Valve

Station isolation valve shall be installed on the discharge of the pumping station to completely isolate the pumping system from the irrigation system. Valve shall be of the lug style butterfly type. Valve shall have one piece body cast from ASTM A 126 cast iron. Stem shall be 416 stainless steel. Disc shall be nickel plated ductile iron. Stem bushings shall be Acetyl to prevent stem seizure to body during prolonged periods of non-use. Seat shall be Buna-N elastomer, one piece construction, and shall also form the flange sealing gaskets. Valves 8 inches and smaller shall have a lever operator. Valves 10 inches and larger shall have a gear operator with hand wheel. Valve shall be rated at 200 psi bubble shutoff.

3.7.3 Pressure Relief Valve

A pilot operated modulating pressure relief valve shall be included and sized per the technical data sheet. The valve shall be set 10 to 14 PSI above operating pressure and will relieve when inlet pressure exceeds spring setting on pilot. Valve shall be quick opening and slow closing to minimize surging. Pressure relief valve or lug valve shall not be used as integral part of normal irrigation pressure control. Discharge of relief valve shall be piped back to wet well. Valve body shall be Ductile iron with 125 pound inlet and outlet flanges, and shall be rated for 250 psi. A wye strainer shall be installed in the inlet side of the valve body to provide clean water to the CRL pilot. A wafer style butterfly valve shall be installed on the inlet of the relief valve. Specifications for this isolation valve will be the same as for the station isolation valve found later in the specification. The pressure relief valve shall work hydraulically and shall not be operated or opened from any electrical

external source or control. The relief valve shall work solely as a safety for over pressure relief and shall not function as a normal part of the station controls.

3.8 ELECTRICAL

3.8.1 Pressure Transducer

Pressure transducer shall be utilized for providing all pressure signals for the control logic. Pressure transducer shall be a solid-state bonded strain gage type with an accuracy of plus/minus 0.20% and constructed of 316L stainless steel. Transducer shall be rated for station discharge pressure as shown on technical data sheet, and shall provide gauge pressure output, rather than an absolute. Pressure transducer constructed of plastic is not acceptable. Threshold transducers are not acceptable.

3.8.2 Flow Meter (Magnetic)

The pumping station shall have a flow sensor installed, which shall be utilized for control and to display the pumping station flow rate, and to display total flow through the pumping station controller operator interface device (OID). Flow meter shall be electro magnetic flow meter comprised of two major components, a primary head and a signal converter. Flow meter signal converter shall produce two separate signals, pulse and 4-20mA, in linear proportion to flow rate. Flow meter shall read flows from 0-40 fps, with a worst case inaccuracy of 0.5% of indicated value (not a percentage of full scale) at 1.3 fps or greater. Flows under 1.3 fps shall have a lower accuracy with accuracy applying to indicated value (not full scale). Flow meter shall be sized so that maximum system flow lies between 16 and 24 fps through the meter. Meter shall be installed according to manufacturers recommendations. Manufacturer shall have a US based manufacturing and assembly center.

3.8.3 Primary Head

The flow tube shall be a ANSI B16.5 class 150 flanged for sizes less than 24 inches and AWWA class D flanged for sizes above 24 inches with a 304SS spool. Wetted liner shall be hard rubber. Liner shall extend beyond the ends of the flow tube and over the flange faces. Liner shall remain stable and in place under a 500 mBar absolute vacuum or pressure situation. Liner shall be rated for the medium pumped. Magnetic coils shall be wound by the flow meter manufacturer and held in place in such a way as to prevent any fluctuation in the magnetic field generated. Magnetic coils in flow tubes 6 inches and smaller shall be epoxied together through a fusion bonding process, which renders the magnetic coil a single solid piece with no loose windings. Electrodes shall be from Hastelloy C4. They shall be inserted from the inside of the flow tube, and shall be sealed along their length. Electrodes sealed at one or more discrete points shall not be accepted. The wires connecting the electrodes to the primary head shall be fastened in place along their entire length to prevent the transmission of erroneous data or signal noise acquired through signal wire movement. All wiring shall be brought into the primary head connection box and terminated. The shroud protecting the coils and electrodes shall be welded in place, and internally pressure tested to 1.5 atmospheres with air pressure. On

completion, the flow tube shall be finish painted on all outside metallic surfaces.

3.8.4 Signal Converter

The signal converter shall be NEMA 4X rated, and shall house the microprocessor-based electronics required for magnet excitation and flow measurement. Functions and data requirements shall be set by either a PC or by a hand held programmer. Unit shall process flow using a bipolar pulsed DC signal. Power supply shall be 115/230VAC 48-64 Hz. Outputs shall be 4-20 mA and pulsed output scalable at 0-100Hz or 0-1000 Hz for full scale range. Signal converter shall also include a binary output to indicate direction of flow.

3.8.4.1 Grounding Rings

Where magnetic flow meters are placed in a pipeline that insulates the water from ground (e.g. epoxy lined steel pipe or plastic) grounding rings are required at both ends of the flow meter to eliminate eddy currents that may exist within the medium being pumped. Grounding rings and flow meter body must be grounded properly., in accordance with manufacturers recommendations.

3.8.4.2 Calibration and Testing

Meter shall be hydraulically calibrated on a testing device that is at least 10 times more accurate than the meter, and shall not be calibrated against a master meter. Each and every flow meter produced by the flow meter manufacturer shall be flow tested and hydraulically calibrated according to this procedure. Manufacturer's test and calibration equipment shall be internationally certified, and shall be re-certified every three years. Calibration shall be accomplished through direct volumetric comparison, on rigs certified as having a measurement error of equal to or less than 0.03%. A calibration certificate shall be issued for each and every flow meter produced by the flow meter manufacturer. Calibration certificate shall be traceable to the US National Bureau of Standards. Meters shall be calibrated under standard conditions to a measurement error of less than 0.50% of rate.

3.8.5 Controls

All control logic shall be handled by an industrial grade programmable logic controller (PLC) with a 160 character LED industrial operator interface providing data entry and read-out capabilities. PLC shall provide demand controlled sequential pump start-up, shutdown and safety features through its pressure sensing, flow sensing and voltage sensing devices. PLC shall have LED indicators for input, output, and six diagnostic read-outs showing PC Run, CPU Fault, and two communications, (battery and force). An LED visual status light is provided for each I/O to indicate on/off status. PLC shall be provided with a built in EEPROM, capacitor, and battery for memory backup. All logic for system control, timing, and control of AFD speed shall be handled by the PLC. A separate set point controller is not acceptable. PLC shall have a built in clock calendar.

Control software shall be parameter driven, fully documented, and allow user to easily change ALL operational parameters. Standard control features and equipment which need to be included as a minimum are as follows :

Fully program the PLC for complete automatic operation of all three pumps.

3.8.6 Alarms and shutdowns

Low discharge pressure
High discharge pressure (Attempt restart)*
Low water level (attempt restart)
Phase loss (Attempts restart)*
Low voltage (Attempts restart)*
Phase unbalance (Attempts restart)*
Phase reversal
Individual motor overload/phase loss (indicates which individual motor was shut down) Manual reset only. Automatic reset is not acceptable.
AFD fault (shutdown AFD pump only and attempts restart)*

* Three unsuccessful restarts in 60 minute period will give hard shutdown.

All alarms will be indicated by a red general alarm light. Specific alarm conditions along with procedures for correction will be displayed in English on the operator interface display (OID).

a. Panel face switches and lights: Controls shall be designed so operator can discretely start and stop all pumps in all modes of operation including manual mode, operator interface failure, AFD bypass and PLC bypass modes with enclosure doors closed and disconnect switch fully engaged. Enclosure shall include the following switches/ or indicator lights:

   Individual pump run lights
   Individual pump on/off switches
   System Hand / Off / Automatic switch
   Mode select switch - allows automatic bypass mode of operation which can be used in the event of AFD failure
   AFD selector switch - in manual mode, allows user to select which pump will be run of the AFD
   Reset - Acknowledges pumping station alarms
   Speed potentiometer - in manual mode allows user to adjust AFD pump speed
   Low discharge pressure over-ride switch - disables low discharge pressure alarm individual pump run lights

b. PLC bypass switch allows user to manually operate pumps should PLC fail. The bypass switch shall be din-rail mounted inside the enclosure. When in bypass the station shall be capable of running all pumps in the manual mode with door operator switches. Any excess flow and pressure shall be bypassed through the pumping station relief valve.

c. Five distinct set point pressures (normal, lockouts 1 & 2, and 3 high elevation). The lockout feature gives the user the flexibility to lower the set point pressure automatically at days and times, and "locking out" the operation of one or more of main pumps if local power authority imposes penalties for operating these pumps during such times. It also allows user to set a maximum RPM for the AFD pump during these lockout times so that user can limit amperage draw during penalty periods. The high elevation set point can be tied into a computerized irrigation system, or directly linked to high elevation satellites. When high elevation satellites are operating, control software will automatically and gradually elevate the pressure to the new desired set point. When finished, the high set point will be lowered back to normal. The high elevation set point will only be used if called out on the technical data sheet.

d. Software will be included to automatically and gradually ramp up irrigation system pressure to the desired operating pressure (i.e., 1 psi every 4 seconds) without overshooting design pressure. This feature operates whenever pressure drops below set point pressure. This ramp up time is fully adjustable by the operator. This control feature is based on an increase in pressure over a pre-defined time period. The acceleration control on the AFD is NOT an acceptable means of adjusting pressure ramp up speed.

e. Software will be included for optionally maintaining a lower irrigation system pressure when not irrigating. Reduced pressure values will be shown in the technical data sheet. Controls will cycle the Water Distribution (Low Pressure) Maintenance pump at these reduced pressures during non irrigation times and pressure will gradually increase to design pressure when the irrigation periods begin.

f. Neither flow meter nor AFD output frequency shall be used for shutting down last AFD driven pump. Controls and software shall incorporate a method to eliminate excessive cycling of AFD pump at very low flow conditions, yet not run the pump excessively at no flow conditions.

g. Real time clock calendar allows PLC to internally provide all date, time, and day of week functions used above.

h. Two separately adjustable PID control loops for both low flow and high flow pressure stability.

i. Full manual operation capability with panel face mounted speed potentiometer for manually adjusting AFD speed.

j. Light test sequence: Pressing the reset button for 5 seconds illuminates all lights.

k. All pumping station shutdowns shall be of the controlled type that sequentially retires pumps at user selectable intervals to reduce

water hammer within the irrigation system. Phase fault shut-down shall have accelerated rate to minimize motor damage. All pump system shut downs shall be of a controlled type that sequentially retire pumps at intervals appropriate to the specific individual alarms.

l. The pumping station software program shall be user friendly enough to enable the set point pressure from being raised or lowered by the end user at the pumping station or through the remote monitoring software package if provided. The pumping station software ladder logic shall be written in such a way that no other value would require changing if the set point pressure had to be adjusted. Pressure maintenance pump and main irrigation pump start pressures, the pressure maintenance pump stop pressure, low discharge shutdown and high discharge shutdown shall not be at a specific value but a differential pressure off of set point (i.e. pressure maintenance pump (PMP) to start 5 psi below set point and stop 5 psi above setpoint).

m. Disable each pump when a pump DISABLE signal is received from the plant SCADA System. The disable feature shall be active in all modes. When the disable ceases, the pump shall resume normal operation without local operator intervention.

n. External Interface with the Process Control System: Discrete outputs shall be isolated contact closures rated for 120 volts AC and 5 amps continuous. Analog outputs shall be 4-20-mA 24-volt DC signals that can drive loads up to 600 ohms impedance. Provide an isolator on each analog output signal. Provide the following signal interfaces:

Pumping Station Common Fail (Discrete Output)
Pump 1 (Distribution) On Status (Discrete Output)
Pump 2 (Distribution) On Status (Discrete Output)
Pump 3 (Maintenance) On Status (Discrete Output)
Pumping Station Distribution Pressure (Analog Output)
Pumping Station Distribution Flowrate (Analog Output)
Pump 1 (Distribution) Disable Command (Discrete Input from SCADA System)
Pump 2 (Distribution) Disable Command (Discrete Input from SCADA System)
Pump 3 (Maintenance) Disable Command (Discrete Input from SCADA System)

3.8.7 Individual Motor Phase

Individual motor phase failure and low voltage safety circuitry shall retire any pump that experiences low voltage, phase failure or phase unbalance as monitored at the load-side of each pump motor contactor. Each pump motor shall have its individual protective device and time delay to allow for transient low voltage during motor starting to allow maximum motor protection. Separate main phase failure and low voltage safety circuit shall also be provided to retire the pumping system if it experiences low voltage, phase failure or phase reversal as monitored at

line-side of control enclosure. Phase monitor shall have a time delay to allow for transient low voltage during motor starting and to allow maximum motor protection. Operator interface device (OID), mounted in enclosure door, shall signal phase failure for any affected pump. The individual pumps or pumping system shall not operate until the voltage problem has been corrected and safety has been manually reset. Single incoming phase monitor safety circuit is not acceptable.

3.8.8 Operator Interface Device (OID)

The pumping station shall include a NEMA 4, 40 character LED display and keypad mounted on the control panel door. This device will allow the operator to view and selectively modify all registers in the PLC. The unit shall store its messages in non-volatile memory. The operator interface device shall incorporate password protection for protecting data integrity. The device will allow for display and modification of all timers, set points, lockout times, etc. The device shall communicate with the PLC through the programming port, and shall include an RS232 communications port allowing a printer to be attached for real time station status logging.

In addition to the data entry keys, the following shall be included on the systems main menu.

a. In addition to the data entry keys, the following shall be included on the systems main menu.

b. Pressure, Flow and System Status: The current pressure, flow, AFD RPM and a system status overview shall be displayed. Codes or Faults ID numbers shall not be adequate.

c. Current Condition of all Alarms: The input state and alarm state for all active alarms shall be shown.

d. Pump Runtime and Starts: Runtime and number of starts for each pump shall be readily accessible. The starts and runtime must be verified by electrical pump feedback. The OID will include a grand total and since reset value for each pump.

e. Alarm History: The last nine alarms shall stored in PLC Memory with detailed information about time, pressure and flow at the time of occurrence. The log will also include diagnostic and recommendations for correction of condition.

f. Total Flow Output: This total shall include a grand total since commission and a total since reset. Stations Events: The last 255 events shall be stored in PLC memory. This will include all alarms, individual pump starts and stops, and change in system status.

g. The display shall provide detailed diagnostic information to the operator about the logical state which starts and stops irrigation pumps. This diagnostic information will provide direct insight to controller internal logic.

3.8.9 Operation

During non irrigation times, the pressure maintenance pump (PM) will cycle on and off as required to maintain irrigation system pressure. The start and stop pressures shall be a differential off of set point. The cycling pressures can be user selected and can be set substantially below normal set point pressure, if desired. If the PM pump cannot maintain the desired pressure, then the AFD will start the first pump and will gradually ramp the pressure up to desired irrigation pressure. The start pressure of the AFD pump shall be a differential below the set point. The pump speed will be modulated to hold a constant discharge pressure regardless of flow. As the flow rate increases and the AFD pump can no longer maintain pressure while at maximum speed, the next sequential pump will be started and the AFD driven pump will accordingly reduce its speed and modulate. An algorithm shall be included for accurately reducing the AFD pump speed as the next sequential pump is started so that no pressure surges are generated during the transition (even with across the line starting). If the user prefers to switch the AFD from pump to pump for sequential starting, he can select this option with the OID. As the flow continues to increase, pumps will sequentially be started until all pumps are running. As the flow begins to decrease, pumps will be sequentially turned off until only a single AFD driven pump is operating. When a no flow condition occurs, PLC must check and verify pump curve position prior to station shutdown.

3.8.10 Remote Disabling of Pumps from Project Control System

The control panel shall receive disable commands for each pump from the overall project control system. When each signal is received, disable the respective pump.

3.8.11 Instrument Enclosures and Intrinsically Safe Circuits

Portions of the project area include abandoned landfills in which the presence of methane gas is possible. To reduce the probability of an explosive incident, use appropriate installation methods for all instrumentation located within a wet well or within an 18 inch envelope above the wet well. For each passive device such as a float, provide an intrinsically safe circuit between the passive device and the control panel to which it is wired. Within the control panel, provide an intrinsically safe relay for each intrinsically safe circuit. For each device that is powered, such as a four-wire transmitter, either provide an intrinsically safe circuit between each transmitter and its sensor, or provide each transmitter with a NEMA 7 explosion proof enclosure.

3.9 GENERAL

3.9.1 Start Up

When discharge piping, electrical connections, and electrical inspection have been completed, the pumping station manufacturer shall be contacted for start up. A minimum one week notice shall be given to manufacturer prior to scheduled start up date. During start up, the complete pumping system shall be given a running test of normal start and stop, and fully

loaded operating conditions. During this test, each pump shall demonstrate its ability to operate without undue vibration, or overheating and shall demonstrate its general fitness for service. All defects shall be corrected and adjustments made at the expense of the pumping station manufacturer. Test shall be repeated until satisfactory results are obtained. Start up assistance will be provided but will be limited to one 8 hour day unless otherwise specified.

After the station startup has been completed, but before leaving the job site, a training session will be given. The training session will be given to the owner or the owner's representative to familiarize them with the pumping system operation, maintenance and adjustments.

3.10 WARRANTY

3.10.1 Scope

Manufacturer shall maintain a Factory Trained and Managed Service Network to execute all warranty claims. All service entities must maintain as their primary core business the maintenance, service and repair of pump systems and shall be supported by a Factory Direct Service Group to include dedicated factory phone support technicians for 24/7 technical assistance. The manufacturer shall provide 24/7 technical phone support to the end user during and after the warranty period. Authorized Service Technicians must be Factory Trained and maintain a minimum of 25 hours per year of on going in-factory training.

3.10.2 Warranty

The manufacturer shall warrant the water pumping system or component shall be free of defects in workmanship for one year from date of authorized start-up but not later than fifteen months from date of manufacturer's invoice.

Manufacturer shall provide a replacement part or component and field installation during the warranty life. Repairs done at manufacturer's expense must be pre-authorized.

3.11 REMOTE MONITORING AND CONTROL PACKAGE

3.11.1 Scope

Pumping station manufacturer shall provide the following remote monitoring system. Remote monitoring and control software shall have been developed internally by the pump system manufacturer and shall operate within the Windows® operating platform.

3.11.2 Remote Pumping Station Control and Monitoring

Remote PC compatible pumping station monitoring software shall be provided which allows user to remotely view all specified items on Instrumentation and Control drawings (IN-1 through IN-11). Pumping station monitoring software shall be included that is 100% compatible with the Microsoft Windows 95 (or later) operating system. Software shall be graphic with

full mouse (point and click) control. The monitoring system shall be capable of communicating at baud rates from 300 Baud to 19,200 baud. User shall be able to view and/or change any and all station operating parameters (i.e., set point pressure, lockout times, ramp up speed, etc.) and also acknowledge and reset fault conditions. The pumping station software shall be field configurable for direct hardware connect, phone modem, radio modem, or cellular modem.

The software shall enable users to locally and/or remotely access (the same or multiple) pumping stations simultaneously. Software shall support program-to-program network communications via TCP/IP to allow the exchange of settings and data with other applications hosted on the same or a remote PC. Software shall support simultaneous monitoring to the same pumping station by any computer networked (LAN, WAN or WWW) to the PC that is connected to the station (via direct or dial up). Complete historical reporting capabilities shall be included. All required PLC interface card(s), modem and hardware required (other than computer, monitor screen, and direct burial cable) shall be supplied by pumping station manufacturer.

a. Manufacturer shall provide the capability to monitor and control the pump system from a remote location. The manufacturer shall provide a complete system, including the portable computer, the remote monitoring and control software package, computer operating system software, and ancillaries. As a minimum, the manufacturer shall provide the following:
PC with Pentium (or higher) processor
Microsoft Windows 2000 operating system with TCP/IP networking installed
128 MB RAM minimum
Hard disk space required: 200 MB minimum
SVGA video card and monitor
CD-ROM drive
Microsoft or compatible pointing device
Available serial port
Hayes-compatible telephone modem

b. The monitoring software shall provide the ability for auto-datalog-download. This feature shall allow the timed retrieval of pumping station historical data in order for complete station history storage and recall. Display of historical information shall be in a logical, graphical format. The data shall also be available as tabular information, either for screen viewing or for ASCII export to external programs. The file format shall be non-proprietary and a description supplied with the software.

c. The monitoring system shall store up to 4 channels of data for analysis and system performance verification. These 4 channels shall be easily user selectable at any time through the graphic interface in the Windows environment. These 4 channels shall be capable of recording any of the following information:

Irrigation system pressure as well as set-point pressure
Pumping station tank pressure (if so equipped)

System flow rate
Auxiliary system pressure (as equipped)
Auxiliary system flow rate (as equipped)
AFD motor speed (as equipped)
Any auxiliary analog equipment such as level and temperature sensors

d. The system shall also store all station events for retrieval and graphical display. The events which are recorded shall be as follows:

Pump start XL (across the line)
Pump start AFD (adjustable speed drive)
Pump stop
All pump switch setting changes
Controller power loss
System switch setting changes
Faults - system and individual pump
Automatic and manual fault reset

e. The pump monitoring system shall graphically display the following real time information:

Pump run status
Pump RPM
Motor/pump hours
Pump system fault
Individual pump faults
Pump control panel switch status
System flow rate
System total flow
All pump control system monitoring pressures

f. The pump monitoring system shall allow remote control of the pump system. Functions are to include:

Ability to read from or write to any valid register within the station controller (PLC)
User defined set of register synonyms for routine setting changes
System fault information including time of occurrence
Pump system lockout scheduling

g. Manufacturer shall provide the following monitor and control items:

1. Software - to be developed "in-house" and be fully documented and serviceable.
2. Hardware - To be provided by manufacturer, including portable computer, monitor, mouse, phone modem, and operating system software.

Graphical display of datalog values will be included with user selectable ranges of 15 minutes, 1/2 hour, 1 hour, 12 hour, and 24 hours per screen.

Monitoring software shall be user configurable. Communications shall be

selected between two basic modes as specified in technical specifications:

a. Direct connection - communicate via buried cable shall be Paige Electric #P7171D for a 2 pair (4 wires) #18 AWG shielded buried cable or #P7171D-A for a 2 pair (4 wire) #18 AWG shielded buried signal cable.

b. Modem - communicate via phone (RJ-11) dial-in @ 9600 Baud. Communications port shall be selected by user (i.e., COM1:, COM2:, etc).

c. Password security shall be provided to guard against unauthorized system changes.

d. The system shall be equipped with a remote sentry system which will provide a simple means of remotely monitoring equipment alarm conditions and notifying a digital cell phone or pager if any alarm condition occurs. The system shall be programmed via Windows based software. The sentry system shall have complete battery back-up capabilities for operation during power outages. The sentry system parameters shall be stored in nonvolatile memory. The sentry unit shall operate on 12 to 24 volts AC or DC with a 9v alkaline battery for backup operation. The manufacturer shall provide din-rail connector and computer cables for all software. The sentry system shall have the following minimum requirements:

Four dry contact inputs to separately monitor four different alarms
Independent trigger time per input (up to two hours per input)
Independent repeat timer per input (up to two hours per input)
User definable, individual alarm code for each input
29 character dialing string with special termination characters
LED activity indicators for each input.

3.12 SKID MOUNTED AND CONTROL INTEGRATED EQUIPMENT

3.12.1 Scope

Pump system manufacturer shall provide the following equipment on skid and shall integrate those devices controls into the main control panel. If there are any discrepancies between this options section and the main specifications, this section takes precedence.

3.12.2 Autoflush Wye Strainer

The pumping station manufacturer shall provide an automatic flushing wye strainer mounted and wired on skid. The wye strainer basket shall be piloted in both body and cover and fabricated from 24 gauge stainless steel with perforations as shown in the technical specifications. The body of the strainer shall be cast iron with flanged connections. Pressure drop through the strainer shall be not more than 1.75 psi at full station capacity. The strainer shall be automatically flushed after a specific pumping station run duration period. This timer is adjustable through the computer operator interface device (OID) as called out for in these

specifications. An H.O.A. selector switch shall be mounted on the control panel face. Provided as an integral part of the strainer package shall be a normally closed solenoid operated valve. The PLC shall initiate the flushing cycle by opening the 2 inch solenoid valve for 15 seconds. The flushing duration shall be an adjustable timer through the computer interface device. A 2 inch ball valve shall be supplied to isolate the solenoid valve from the irrigation system. The wye strainer size shall be specified in the technical data sheet. The flush line shall be piped to skid edge. Others to supply flush line back to supply pond.

3.12.3 Inline Filter

Pump system manufacture shall provide an inline filter system on the discharge header. The unit(s) shall continuously filter water at maximum system flow at 200 micron.

The filter, including all its monitoring and flushing operations, shall be controlled by a Programmable Logic Controller (PLC). The PLC, and its related circuitry, shall be housed in a wall-mounted NEMA 4 rated enclosure. An adjustable Differential Pressure Switch (DPS) shall sense the pressure differential across the filter as filter cake builds up on the element. The DPS shall signal the PLC to initiate the cleaning cycle of the filter when the filter cake causes a pressure differential of no more than 7 psi. The DPS shall have the capability being adjusted to sense a differential of 3 psi to 10 psi.

The filter's integral PLC and DPS control package design shall insure that the flushing cycle is automatically initiated by simultaneously opening the solenoid operated waste exhaust valve and an electrically operated cleaning mechanism. The cleaning process shall require a minimum inlet pressure of 35 psi, and the cycle shall be completed in no more than 40 seconds. The electrically driven cleaning scanner shall operate automatically during the backwash cycle. It shall function to dislodge suspended materials on the internal surface of the filter screen and hydraulically flush the suspended solids through the automatic waste-exhaust valve. The waste-exhaust flow rate shall be no more than 220 GPM, at 30 psi. At no time shall the exhaust waste-water exceed more than 1% of the total system flow rate. During the flush cycle, the filter shall also continue to provide filtered water to the service line. The filter shall not produce more than 2 psi pressure drop, at the designed flow rate, with the screen clean. At no time shall a "backwash" cycle be required to clean the screen. Under no circumstances shall the systems fluid be allowed to move backwards through the filter element.

The filter(s) shall be designed to permit integral operation of multiple units in series or in parallel for flow rates in excess of the capacity of a single unit.

FILTER MANAGEMENT FEATURES SHALL INCLUDE:

a. The filter shall not be allowed to flush during pressure maintenance pump operation.

b. The filter shall not be allowed to flush during station start.

The system shall have time to stabilize after to start-up prior to flushing cycle.

c. When more than one filter is provided, filters shall flush sequentially and never be allowed to flush at the same time.

d. The filter controls shall allow for flushing based on operational time regardless of pressure differential.

e. The filter flush duration shall be adjustable by the end user.

f. The filter controls shall be capable of an automatic maintenance flush.

g. The pressure differential control shall be adjustable to allow the end user to set the pressure span.

h. Filter Housing. The housing shall be high grade, epoxy-coated carbon steel. The filter housing shall have a maximum operating pressure of 150 psi and a maximum fluid temperature of 176 degrees F. The interior and exterior wetted surfaces shall be epoxy coated.

i. Filtration elements shall be 200 micron. The screen integrity design shall be adequate to support and withstand a full pressure differential equal to the specified pressure rating of the housing and shall be pressure tested to 300 psi burst strength. The screen may be changed without removal of the filter from its piped connection (installed position).

j. The fine screen shall provide a minimum of nine (9) times the open area of the inlet pipe.

k. The filter shall conform to international quality code ISO-9002. (ISO-9002 meets or exceeds all current US domestic quality requirements for filtration devices. Including but not limited to; ASNI, AWWA, ASE, ETC.)

l. The manufacture shall provide piping from the discharge(s) of the filter flush valve to the edge of the skid structure and provide a flange for connection by the end user. The end user shall supply the required piping to carry the backflush water and the rinse control water to a drain.

3.12.4 Lake Level Controls - AC

Reservoir level shall be continuously monitored by a liquid level sensor. When low level is sustained for a period of time, a 120v AC signal shall be directed to start future supply will pump through dry-contact closure of a relay which shall be mounted at the filling source. Signal shall be maintained until reservoir is filled to the upper sensor. Upon cessation of signal, relay shall drop out and pump shall stop. An HOA selector switch with green light shall be mounted on the control panel face.

3.12.5 Power Zone

The pumping station manufacturer shall provide an auxiliary power supply prewired and mounted on the skid. It should be capable of delivering 120 volt OR 220 Volt single phase power, with KVA and breaker ratings as called out in the technical data sheets and specified in article 2.6.1.

3.12.6 Inside Panel Lighting Package

The pumping station manufacturer shall provide within their control panel, fluorescent internal lighting that is switch activated when the control panel door is open. The light fixture should be mounted on the top of the enclosure and should be capable of illuminating the entire inside of the enclosure.

3.13 ADDITIONAL EQUIPMENT

3.13.1 Scope

Pump system manufacturer shall provide the following as part of the pumping system. These items shall be shipped loose and installed on site. All items shall be properly labeled with part name and item number. If there are any discrepancies between this options section and the main specifications, this section takes precedence.

3.13.2 Automatic Rotating Lake Screen

The pumping station manufacturer shall provide a automatic lake screen compatible with the flows required from the pumping station. The automatic lake screen shall be a rotation type and shall operate when any pump is called on to operate. The lake screen shall be supplied with a wye strainer to filter water used for the screen operation. The lake screen shall start upon activation of any pump and remain in operation throughout the pump system operation cycle.

The lake screen shall be fabricated from high density polyethylene including frame, end covers. Screen shall be powder epoxy coated aluminum mesh. Screen shall be #10 mesh. GPM requirements for screen operation shall be as required and shall be added to total system flow for horsepower calculations. Hydraulic water supply piping shall be provided and installed by others.

3.13.3 Discharge Dog Leg

The pumping station manufacturer shall supply the discharge pipe connecting the pumping station discharge to the irrigation main line. ASTM A 105/A 105M SCHEDULE 40 PIPE OR HEAVIER. The discharge pipe shall be painted the same as the main pumping station and shall be size per the technical data sheets.

-- End of Section --

PUMP DATA SHEET
VERTICAL TURBINE PUMPS NO. P-40-1-1, P-40-1-2, P-50-1-1, P-50-1-2

Project: Rio Salado Environmental Restoration Project

Owner: City of Phoenix, Arizona

Service: Irrigation Water

Pump Name: Water Distribution Pumps

Equip. Tag Number(s): P-40-1-1, P-40-1-2, P-50-1-1, P-50-1-2

Pump Mfr.:

Size & Type:

No. Stages: 5

Serial No.:

Model No.:

No. Pumps Required: 4

Drive Type: ☐ Constant ☒ Adjustable

LIQUID	OPERATING CONDITIONS	SERVICE CONDITIONS
Name: Distribution System Water	Capacity (U.S. gpm):	Temp (°F): Max 125 Min 20
Pumping Temperature (°F):	Normal 425 Rated 425	Rel. Hum (%): Max 100 Min 30
Normal 75 Max 90 Min 68	Total Dynamic Head (ft): 170	Altitude (ft): 1070
Specific Gravity @ 68 °F: 1.0	Suction Lift (psig):	☐ Indoor ☐ Heated
Vapor Pressure (psia): 0.34	Max N/A Rated N/A	☒ Outdoor ☒ Unheated
Viscosity (CP) @ 68 °F: 1.0	Submergence (min. ft.):	Will Pump be Submerged?
pH: 6.5-8.0	NPSH Available (ft):	☒ Yes ☐ No
Corrosion/Erosion/Abrasion Caused by:		Area Classification: unclassified
Groundwater contaminants		Other:
Remarks:	Remarks:	Remarks:

PERFORMANCE REQUIREMENTS (manufacturer to supply missing data)

Proposal Curve No.:	Min. Continuous Flow (gpm):	NPSH Required (ft water): 5
Pump Speed Range (rpm): 1,770	Max. Head (ft): 250	3% Head Drop
Efficiency (%):	Max. Power (BHP): 27.4	Suction Specific Speed: 2290
Rated Power (BHP):		Factory Testing:
		☒ Required ☐ Not Required

Remarks:

Equipment Tag Number(s): P-40-1-1, P-40-1-2, P-50-1-1, P-50-1-2

PUMP CONSTRUCTION DETAILS (manufacturer to supply missing data)

Nozzles

	Size	Rating	Facing	Location
Suction	N/A			
Discharge				

Miscellaneous Connections

	Size	Location
Drain		
Vent		
Pres. Gauge		
Warm Up		

Casing Mount:

☒ Vertical

☐ Vertical Barrel

Max. Allowable Pressure (psig):

At 60°F: _____

At Norm. Pump. Temp.: 400

Pump Shaft Dia. (In.): _____

Column Size (In.): _____

Lineshaft Type:

☐ Open ☐ Enclosed

Lineshaft Size (In.): _____

Hydro Test Pressure (psig): _____

Field Testing: ☐ Not required

☒ Required, functional and performance

Impeller Type:

☐ Semiopen

☐ Open ☒ Closed

Impeller Diameter (in.):

Rated 6.2 Max _____ Min _____

Bowl Size (in.) 9.25

No. of Stages: 5

Packing Mfr: _____

Type Packing Box

Size/No. Rings (5/16")/7

API Class Code _____

Manufacturer _____

Model _____

Manufacturer Code _____

Bearings (Type/No.):

Bowl _____

Lineshaft _____ Pump Shaft _____

Intermediate _____ Guide _____

Head Shaft: _____

Lubrication Type:

☐ Grease ☐ Oil

☒ Pumped Liquid

Coupling:

Manufacturer _____

Type _____ Model _____

Driver Half-Coupling Mounted by:

☐ Pump Mfr. ☐ Driver Mfr.

☐ Purchaser

Gland Type/Material: _____

Gland Plate Taps Required:

☐ Quench ☐ Flush
☐ Drain ☐ Vent

MATERIALS (manufacturer to supply missing data)

Bowl: ASTM A48 CL30

Bowl Wear Rings: _____

Column: ASTM A38

Remarks: _____

Impeller: ASTM B584

Impeller Wear Rings: Bronze

Bowl Bearing: Bronze

Head Shaft Bearing: Bronze

Lineshaft Bearing: Bronze

Shaft: ASTM A582 416 SS

Shaft Sleeve: N/A

Discharge Head:

Type Fabricated

Material Carbon Steel

ADDITIONAL REQUIREMENTS

Sole Plate
Suction Strainer

INDUCTION MOTOR DATA SHEET

Project: Rio Salado Environmental Restoration Project

Owner: City of Phoenix, Arizona

Equipment Name: Water Distribution Pumps

Equipment Tag Number(s): P-40-1-1, P-40-1-2, P-50-1-1, P-50-1-2

Type: Squirrel-cage induction meeting requirements of NEMA MG 1

Manufacturer: For multiple units of the same type of equipment, furnish motors and accessories of a single manufacturer

Hazardous Location: ☐ Furnish motors for hazardous (classified) locations that conform to UL 674 and have an applied UL listing mark

Motor Horsepower: 25

Voltage: 460

Phase: 3

Frequency: 60

Synchronous Speed: 1,800 rpm

☐ Multispeed, Two-Speed:

_____ / _____ rpm

☐ Constant Horsepower

☐ Variable Torque

☐ Constant Torque

Winding: ☐ One ☐ Two

Guaranteed Minimum Efficiency at Full Load: 90.1 percent

Guaranteed Minimum Power Factor at Full Load: 85 percent

Service Factor (@ rated max. amb. temp.): ☐ 1.0 ☒ 1.15

Enclosure Type: TEFC

Mounting Type: ☐ Horizontal ☒ Vertical

☒ Vertical Shaft: ☐ Solid ☒ Hollow

☒ Vertical Thrust Capacity (lb): Up _____ Down 2,500

☒ Adjustable Speed Drive:

Operating Speed Range: 100 to 70% of Rated Speed

☒ Thermal Protection: Thermostat

☒ Space Heater: 120 volts, single phase

☒ Oversize main terminal (conduit) box for motors

☒ Terminal for connection of equipment grounding wire in each terminal box

Additional Motor Requirements: ☐ See Section

Special Features:

Motor shall be inverter duty motor.

SUBMERSIBLE PUMP DATA SHEET, 11212-1

Tag Numbers: P-40-1-3, P-50-1-3

Pump Name: Water Distribution Maintenance Pump

Manufacturer and Model Number: (1) _____
(2) _____

SERVICE CONDITIONS

Liquid Pumped (Material and Percent): Distribution System Water

Pumping Temperature (Fahrenheit): Normal: 75 Max 100 Min 50

Specific Gravity at 60 Degrees F: 1 Viscosity Range: ___

pH: 6.5 - 8.0

Abrasive (Y/N) N Possible Scale Buildup (Y/N): Y

Min. NPSH Available (Ft. Absolute): _____

PERFORMANCE REQUIREMENTS

Capacity (US gpm): Rated: 53 Secondary: _____.

Total Dynamic Head (Ft): Rated: 140 Secondary: _____.

Maximum Shutoff Pressure (Ft): 258.

Min. Rated Pump Hydraulic Efficiency at Rated Capacity (%): 65

Max. Pump Speed at Rated Capacity (rpm): 3600 Constant (Y/N): Y
Adjustable (Y/N): N

DESIGN AND MATERIALS

Pump Type: Heavy-Duty Non-Clog (Y/N) N Other: _____

Volute Material: Stainless Steel Pump Casing Material: Stainless Steel _____

Motor Housing Material: Stainless Steel

Wear Rings Case (Y/N) ____

Wear Ring Impeller (Y/N): _____ M

SUBMERSIBLE PUMP DATA SHEET, 11212-2_

Tag Numbers: P-40-1-3, P-50-1-3

Pump Name: Water Distribution Maintenance Pump

Elastomers: _____

Fasteners: _____

Impeller: Type: Double-Shrouded Non-Clog (Y/N): Y Other: _____
Material: Stainless Steel

Shaft Material: _____

Base Elbow: _____

Double Mechanical Seal: ____ Bearing Life (Hrs): min 40,000 hrs

DRIVE MOTOR

Horsepower: 3 Voltage: 460 Phase: 3 Synchronous Speed (rpm) 3600

Enclosure: EXP-Submersible

CLASSIFICATION: Class 1, Group D, Division 1

Other Features: _____

REMARKS Moisture Detection Switches: Yes

Thermal Protection Embedded in Winding: Yes

SECTION TABLE OF CONTENTS

DIVISION 13 - SPECIAL CONSTRUCTION

SECTION 13121

PRE-FABRICATED STEEL BRIDGES

PART 1 GENERAL

1.1 REFERENCES
1.2 DESCRIPTION OF BRIDGES
1.2.1 Dimensions
1.2.2 Framing
1.2.3 Abutment Requirements
1.3 EXPERIENCE
1.3.1 Manufacturer
1.3.2 Installer
1.4 DESIGN REQUIREMENTS
1.4.1 Dead and Live Loads
1.4.2 Wind Loads
1.4.3 Seismic Loads
1.4.4 Collateral Loads
1.4.5 Camber
1.4.6 Deflection
1.5 SUBMITTALS
1.6 DELIVERY, STORAGE, AND HANDLING
1.7 WARRANTY
1.8 QUALITY ASSURANCE
1.8.1 Drawings: Structural Steel for Pre-Fabricated Bridges
1.8.2 Design Data: Bridges

PART 2 PRODUCTS

2.1 PRE-FABRICATED STEEL BRIDGE MATERIALS
2.2 BEARING PADS
2.3 CONCRETE MIX DESIGN AND CONCRETE REINFORCEMENT
2.4 GUARDRAIL
2.5 METAL DECK

PART 3 EXECUTION

3.1 INSPECTION
3.2 ERECTION
3.2.1 Field Welding
3.2.2 Field Bolting

-- End of Section Table of Contents --

SECTION 13121

PRE-FABRICATED STEEL BRIDGES

PART 1 GENERAL

1.1 REFERENCES

The publications listed below form a part of this specification to the extent referenced. The publications are referred to in the text by the basic designation only.

AMERICAN ASSOCIATION OF STATE HIGHWAY AND TRANSPORTATION OFFICIALS (AASHTO)

AASHTO SSHB	(1996) Standard Specifications for Highway Bridges, 16th Edition

AMERICAN INSTITUTE OF STEEL CONSTRUCTION (AISC)

AISC LFRD Vol I	(2001) LFRD Manual of Steel Construction Load, 3rd Edition

ASTM INTERNATIONAL (ASTM)

ASTM A 242/A 242M	(2001) High-Strength Low-Alloy Structural Steel
ASTM A 500	(2001a) Cold-Formed Welded and Seamless Carbon Steel Structural Tubing in Rounds and Shapes
ASTM A 572/A 572M	(2001) High Strength Low-Alloy Columbium-Vanadium Structural Steel
ASTM A 606	(2001) Steel, Sheet and Strip, High-Strength, Low-Alloy, Hot-Rolled and Cold-Rolled, with Improved Atmospheric Corrosion Resistance
ASTM A 709/A 709M	(2001bel) Carbon and High-Strength Low-Alloy Structural Steel Shapes, Plates, and Bars and Quenched-and-Tempered Alloy Structural Steel Plates for Bridges

AMERICAN WELDING SOCIETY (AWS)

AWS D1.1	(2000) Structural Welding Code - Steel
AWS D1.5	(1995) Bridge Welding Code

INTERNATIONAL CONFERENCE OF BUILDING OFFICIALS (ICBO)

ICBO Building Code (2000) Uniform Building Code (3 Vol.)

1.2 DESCRIPTION OF BRIDGES

1.2.1 Dimensions

Two bridges are specified in this document, one has a clear span of 88 feet and the other has a clear span of 163 feet. Bridge width shall be 16 feet clear for both bridges. 54 inch pedestrian/bicycle guard rail shall be included. Guardrail shall extend 10 feet past bridge at East abutment (#2) of Road "F" West Maintenance Bridge.

1.2.2 Framing

The overall profile of the bridges shall match what is shown in elevation on the Drawings and detailed with the top chord of bridge trusses at least 54 inch above concrete deck each end. Concrete deck between supporting trusses shall be 8 inches minimum thickness and shall be supported by deck beams and bracing. Deck and supports to be designed and detailed by Bridge Manufacturer. Open truss configuration to meet overall profile shown on Drawings. Truss members shall be structural steel tubular sections fabricated with weathering steel in accordance with ASTM A 572/A 572M or ASTM A 709/A 709M grade 50 or ASTM A 500. Bridge shall be sand blasted, primed and finish coated with an appropriate graffiti resistant paint.

1.2.3 Abutment Requirements

Bridges shall bear directly on bearing pads and concrete bridge abutments detailed on Drawings. Exact bearing surface elevation required by Bridge Manufacturer shall be submitted in Bridge shop Drawings including bearing anchor bolts where required. Final bridge end reactions, dead and live loads, shall be included in Bridge shop Drawings.

1.3 EXPERIENCE

1.3.1 Manufacturer

The manufacturer shall have AISC Major Bridge Certification with fracture critical endorsement, and a minimum of 5 years experience in the design and fabrication of major single span bridges.

1.3.2 Installer

Erection of bridges shall be performed by the Bridge Manufacturer or their approved Erector with at least 5 years of experience in major single span steel bridge erection.

1.4 DESIGN REQUIREMENTS

1.4.1 Dead and Live Loads

Dead weight of Bridge and Deck. HS-20-44 Live Load in accordance with

AASHTO SSHB, Section 3.

1.4.2 Wind Loads

Compute and apply wind pressures per ICBO Building Code. Basic wind speed and multiplying factors are as indicated for area that bridges are to be constructed.

1.4.3 Seismic Loads

Compute and apply seismic loads per ICBO Building Code for area that bridges are to be constructed. Site categorization shall be so as defined by ICBO Building Code.

1.4.4 Collateral Loads

Provide for a minimum collateral live load of 50 psf for 163 feet long bridge and 85 psf for 70 feet long bridge and design for governing case. Indicate additional design loads for mechanical/electrical equipment or piping. Use a minimum uniform load of 5 psf if specific loads are not called out.

1.4.5 Camber

Provide camber to bridge trusses equal to total Dead Load deflection plus 50% live load deflection at midspan. Submit calculations in Bridge Shop Drawings.

1.4.6 Deflection

Maximum deflection to meet requirements of AASHTO SSHB, AISC LFRD Vol I and shall not exceed L/360.

1.5 SUBMITTALS

Submit the following in accordance with Section 01330, "Submittal Procedures."

SD-02 Shop Drawings

Structural Steel for Pre-Fabricated Bridges

Template for required bearing anchor bolts

Submit all required information to erect the bridges and install components.

SD-03 Product Data

Pre-Fabricated steel bridge materials

Submit sufficient data indicating conformance to specified requirements on materials provided under this section.

SD-05 Design Data

Pre-Fabricated Steel Bridges; G, RE

Bridge end reactions; G

Bearing Anchor bolts as required; G, RE

Deck beams and bracing; G, RE

SD-07 Certificates

Pre-Fabricated steel bridge materials

Submit certificates attesting that materials comply with this specification.

1.6 DELIVERY, STORAGE, AND HANDLING

Deliver, store, and handle manufactured items so that materials remain dry and undamaged. Do not store in contact with materials that might cause staining.

1.7 WARRANTY

Provide warranty against structural failures caused by ordinary wear and tear by the elements for a period of 20 years. Such warranty shall start upon final acceptance of the work or the date the Government takes possession, whichever is earlier.

1.8 QUALITY ASSURANCE

1.8.1 Drawings: Structural Steel for Pre-Fabricated Bridges

Submit complete design Drawings for the Pre-Fabricated bridges. Submit all details required to anchor bridges to concrete abutments.

1.8.2 Design Data: Bridges

Submit design calculations for the entire Pre-Fabricated Steel Bridges and anchorage to abutments, prepared and stamped by a professional engineer in the State of Arizona. Also submit for components requested, and stamp with the seal of a professional engineer. Include sizes and location of anchor bolts as required.

PART 2 PRODUCTS

2.1 PRE-FABRICATED STEEL BRIDGE MATERIALS

All steel bridges shall meet the requirements of ASTM A 242/A 242M or ASTM A 606, and shall be designed by a Professional Engineer with at least 5 years experience in the design of single span Pre-Fabricated Steel Bridges.

2.2 BEARING PADS

Manufacturer's standard Neoprene with bonded Teflon Bearing Pads.

2.3 CONCRETE MIX DESIGN AND CONCRETE REINFORCEMENT

Minimum 4,000 psi concrete in accordance with Section 03307, CONCRETE FOR MINOR STRUCTURES and 60,000 psi mild reinforcing in accordance with Section 03200, CONCRETE REINFORCEMENT. These products are to be submitted by Contractor for approval.

2.4 GUARDRAIL

Continuous 54 inch high steel rails attached to inside face of trusses and designed in accordance with AASHTO SSHB, Section 2.7.

2.5 METAL DECK

Metal deck shall be galvanized - 20 gauge minimum. Attachment details shall be designed and detailed by Bridge Manufacturer.

PART 3 EXECUTION

3.1 INSPECTION

Check concrete dimensions, anchor bolt size and placement, and abutment elevation with the bridge manufacturer's templates and Drawings before fabrication. Concrete shall be tested as specified in Section 03307, CONCRETE FOR MINOR STRUCTURES.

3.2 ERECTION

Erect in accordance with the manufacturer's approved erection instructions and diagrams. Correct defects and errors in the fabrication of bridges components in a manner approved by the Contracting Officer. If defects or errors in fabrication of components cannot be corrected, remove and provide nondefective components.

3.2.1 Field Welding

Steel, AWS D1.1 and AWS D1.5.

3.2.2 Field Bolting

AISC LFRD Vol I slip critical connection.

-- End of Section --

SECTION TABLE OF CONTENTS

DIVISION 13 - SPECIAL CONSTRUCTION

SECTION 13405

PROCESS CONTROL

PART 1 GENERAL

1.1 REFERENCES
1.2 CONTROL SYSTEM DESCRIPTION
1.2.1 Control System General Requirements
1.2.2 Control System Operation
1.2.3 Control System Points
1.2.4 Symbols, Definitions, and Abbreviations
1.3 ENVIRONMENTAL CONDITIONS
1.4 SUBMITTALS
1.5 DATA TRANSMISSION SYSTEMS (DTS)
1.5.1 Master Telemetry Unit (MTU)
1.6 EQUIPMENT REQUIREMENTS
1.6.1 Materials and Equipment
1.6.2 Nameplates

PART 2 PRODUCTS

2.1 GENERAL REQUIREMENTS
2.2 MONITORING AND CONTROL PARAMETERS
2.2.1 Transmitter
2.2.2 Liquid Service
2.2.3 Flow Measuring Device - Propeller Meter
2.2.4 Level Instrumentation
2.2.4.1 Conductance Electrode Switch(es)
2.2.4.2 Ultrasonic Level Sensor
2.2.5 Pressure Instrumentation
2.2.5.1 Pressure Gauges
2.3 RADIO COMMUNICATION SYSTEM
2.3.1 General Requirements
2.3.2 Radio Link Design
2.3.3 Radio Survey
2.3.4 Radio Transceivers
2.3.5 Transmission Cable
2.3.6 Radio Antenna
2.3.7 Radio Towers
2.4 PROGRAMMABLE LOGIC CONTROLLER (PLC)
2.4.1 PLC General Requirements
2.4.2 Modular PLC
2.4.2.1 Central Processing Unit (CPU) Module
2.4.2.2 Communications Module
2.4.2.3 Power Supply Module
2.4.2.4 Input/Output (I/O) Modules
2.4.2.5 Operator Interface Unit
2.4.3 Loop PLC

2.4.3.1 Central Processing Unit (CPU)
2.4.3.2 Power Requirements
2.4.3.3 On-Off Switch
2.4.3.4 Parameter Input and Display
2.4.3.5 Self Tuning
2.4.3.6 Manual Tuning
2.4.4 Program Storage/Memory Requirements
2.4.5 Input/Output Characteristics
2.4.6 Wiring Connections
2.4.7 On-Off Switch
2.4.8 Diagnostics
2.4.9 Accuracy
2.5 PLC SOFTWARE
2.5.1 Operating System
2.5.1.1 Startup
2.5.1.2 Failure Mode
2.5.2 Functions
2.5.2.1 Analog Monitoring
2.5.2.2 Logic (Virtual)
2.5.2.3 State Variables
2.5.2.4 Analog Totalization
2.5.2.5 Trending
2.5.3 Alarm Processing
2.5.3.1 Digital Alarms
2.5.3.2 Analog Alarms
2.5.3.3 Pulse Accumulator (PA) Alarms
2.5.4 Constraints
2.5.4.1 Equipment Constraints Definitions
2.5.4.2 Constraints Checks
2.5.5 Control Sequences and Control Loops
2.5.6 Command Priorities
2.5.7 Resident Application Software
2.5.7.1 Program Inputs and Outputs
2.5.7.2 Failure Mode
2.6 SUPERVISORY CONTROL AND DATA ACQUISITION SYSTEM (SCADA) COMPUTER SYSTEM
2.6.1 SCADA General Requirements
2.6.2 Industrial Ethernet Switch
2.6.3 Industrial Computer
2.6.4 SCADA Software
2.6.5 Autodialing Alarm Software
2.7 CONTROL PANELS
2.7.1 Components
2.7.1.1 Enclosures
2.7.1.2 Controllers
2.7.1.3 Standard Indicator Light
2.7.1.4 Selector Switches
2.7.1.5 Push Buttons
2.7.1.6 Relays
2.7.1.7 Relays, Long Distance Signal Transmission
2.7.1.8 Signal Isolators
2.7.1.9 Digital Indicators
2.7.1.10 Terminal Blocks
2.7.1.11 Alarm Horns

2.7.2 Panel Assembly
2.7.3 Electrical Requirements
2.7.4 Grounding
2.7.5 Convenience Outlet
2.7.6 Panel Interior Light
2.7.7 Ventilation System
2.7.8 Heating System
2.7.9 Air Conditioning System, Outdoor, Closed Loop
2.7.10 Battery Power Supply System
2.8 DATA COMMUNICATION REQUIREMENTS
2.8.1 Error Detection and Retransmission
2.9 FACTORY TEST
2.9.1 Factory Test Setup
2.9.2 Factory Test Procedure
2.9.3 Factory Test Report

PART 3 EXECUTION

3.1 EQUIPMENT INSTALLATION REQUIREMENTS
3.1.1 Installation
3.1.1.1 Isolation, Penetrations of Buildings and Clearance from Equipment
3.1.1.2 Device Mounting
3.1.2 Sequences of Operation
3.2 INSTALLATION OF EQUIPMENT
3.2.1 Control Panels
3.2.2 Flow Measuring Device
3.2.2.1 Propeller Meter
3.2.3 Level Instruments
3.2.3.1 Conductance Electrodes
3.2.3.2 Ultrasonic Sensor
3.2.4 Pressure Instruments
3.2.5 Instrument Shelters
3.2.6 Output Devices
3.2.7 Enclosures
3.2.8 Transformers
3.2.9 Radio Towers
3.3 WIRE, CABLE AND CONNECTING HARDWARE
3.3.1 Metering and Sensor Wiring
3.3.1.1 Power Line Surge Protection
3.3.1.2 Sensor and Control Wiring Surge Protection
3.3.1.3 Grounding
3.4 APPLICATION SOFTWARE SUBMITTAL AND DESIGN WORKSHOPS
3.5 SOFTWARE INSTALLATION
3.6 FIELD TESTING AND ADJUSTING EQUIPMENT
3.6.1 Testing, Adjusting and Commissioning
3.6.2 Performance Verification Test (PVT)
3.6.3 Endurance Test
3.6.3.1 Phase I (Testing)
3.6.3.2 Phase II (Assessment)
3.6.3.3 Exclusions
3.7 MANUFACTURER'S FIELD SERVICES
3.8 INSTRUMENTATION AND CONTROL SYSTEM
3.9 FIELD TRAINING

3.9.1 Preliminary Operator Training
3.9.2 Additional Operator Training
3.9.3 Maintenance Training
3.9.4 Specialized Training
3.9.4.1 Flow Meter Training

-- End of Section Table of Contents --

SECTION 13405

PROCESS CONTROL

PART 1 GENERAL

1.1 REFERENCES

The publications listed below form a part of this specification to the extent referenced and are referred to in the text by the basic designation only.

AMERICAN NATIONAL STANDARDS INSTITUTE (ANSI)

ANSI C12.1	(2001) Electric Meters Code for Electricity Metering

ASME INTERNATIONAL (ASME)

ASME FM	(1971; Sixth Edition) Fluid Meters Their Theory and Application

INSTITUTE OF ELECTRICAL AND ELECTRONICS ENGINEERS (IEEE)

IEEE C37.90	(1989) Relays and Relay Systems Associated with Electric Power Apparatus
IEEE C37.90.1	(1989) Surge Withstand Capability (SWC) Tests for Protective Relays and Relay Systems
IEEE C62.41	(1991) Recommended Practice for Surge Voltages in Low-Voltage AC Power Circuits
IEEE Std 100	(2000) IEEE Standard Dictionary of Electrical and Electronic Terms
IEEE Std 142	(1992) Recommended Practice for Grounding of Industrial and Commercial Power Systems - Green Book

INTERNATIONAL ELECTROTECHNICAL COMMISSION (IEC)

IEC 61131-3	(1993) Programmable Controllers - Part 3: Programming Languages

NATIONAL ELECTRICAL MANUFACTURERS ASSOCIATION (NEMA)

NEMA 250	(1997) Enclosures for Electrical Equipment (1000 Volts Maximum)

NEMA ICS 1	(2001) Industrial Control and Systems
NEMA ICS 2	(2002) Industrial Control and Systems Controllers, Contactors, and Overload Relays Rated Not More Than 2,000 Volts AC or 750 Volts DC
NEMA ICS 3	(1993) Industrial Control and Systems Factory Built Assemblies
NEMA ICS 4	(2000) Industrial Control and Systems Terminal Blocks

NATIONAL FIRE PROTECTION ASSOCIATION (NFPA)

NFPA 70	(2002) National Electrical Code

NATIONAL INSTITUTE OF STANDARDS AND TECHNOLOGY (NIST)

NIST SP 250	(1998) Calibration Service Users Guide

UNDERWRITERS LABORATORIES (UL)

UL 508	(1999; Rev thru Dec 2001) Industrial Control Equipment
UL 1059	(2001; 4th Edition) Terminal Blocks

U.S. NATIONAL ARCHIVES AND RECORDS ADMINISTRATION (NARA)

47 CFR 15	Radio Frequency Devices

1.2 CONTROL SYSTEM DESCRIPTION

The process instrumentation and control system shall be used to monitor and control the operation of process equipment as specified and in accordance with the sequence of control and control schematics shown on the drawings. The control system shall provide for operator interaction, overall control system supervision, and process equipment control and monitoring. The Contractor shall provide hardware configured and sized to support expansion as specified and shown on the drawings.

1.2.1 Control System General Requirements

The control system shall consist of field instrumentation, control panels, programmable logic controllers (PLCs), radio transceivers and radio support equipment such as antennas and towers. The PLC at the NE 7th Ave. Reservoir shall be configured as the Master Telemetry Unit (MTU). It shall communicate with PLCs configured as servant Remote Telemetry Units (RTUs) at the Central Ave. and SE 7th St. Reservoirs. The Central Ave. Reservoir RTU was installed in Phase 1A, but no associated radio equipment was installed in that Phase. As part of this project; i.e. WSMR, provide a radio transceiver and associated radio equipment and perform all work

necessary to make the Central Ave. Reservoir a fully operational servant RTU.

Provide control strategies such that well pumps installed in near future phases are started and stopped as a function of level in the receiving reservoir. Discrete signals shall be transmitted between each MTU or RTU and its associated well pump panel installed in a near-future project. The discrete signals shall be 24-volt dc circuits that include relays suitable for long-distance signal transmission. Even though the well pumps have not yet been installed, fully test the control strategies using simulated variables.

The NE 7th Ave. well pump that will be installed in Phase 1B (near-future) will be furnished with an adjustable speed drive. This pump will supply water either to the NE 7th Ave reservoir (constructed in this phase; i.e., Phase WSMR) or to the Central Ave. Reservoir (whose RTU was already installed in Phase 1A).

Control strategies developed for this pump shall be suitable for supplying either reservoir, and shall be selectable at the RTU/MTU.

The radio communication link between the central MTU and each of the two servant RTU sites will be unlicensed 902/928 MHz spread spectrum radio.

Perform a radio survey to confirm that the antenna heights shown in the design provide satisfactory radio communication. The survey shall include an analysis of each radio path and a field study. The study shall measure radio strength data at each site, and shall determine the required antenna heights that result in adequate radio signal strength at each site.

The base bid is based on an antenna height of 40 feet at the master site and 20 feet at remote sites. Adjust antenna heights as necessary to achieve satisfactory communications. If a master site antenna height of 20 feet achieves satisfactory communication, this feasible option shall be discussed with the Contracting Officer, and implemented at their discretion. The control system supplier shall also conduct several application software submittal and design workshops with the Contracting Officer.

Portions of the project area include abandoned landfills in which the presence of methane gas is possible. To reduce the probability of an explosive incident, use appropriate installation methods for all instrumentation located within a wet well or within an 18 inch envelope above the wet well. For each passive device such as a float, provide an intrinsically safe circuit between the passive device and the control panel to which it is wired. Within the control panel, provide an intrinsically safe relay for each intrinsically safe circuit. For devices which are powered, such as a four-wire transmitter, either provide an intrinsically circuit between each transmitter and its sensor, or provide each transmitter with a NEMA 7 explosion proof enclosure.

1.2.2 Control System Operation

The control system provided under this specification shall operate using

direct digital control (DDC) algorithms or ladder logic type and supervisory control to provide the required sequences of operation. Input data to the controller shall be obtained by using instruments and controls interfaced to mechanical, electrical, utility systems and other systems as shown and specified. All required setpoints, settings, alarm limits, and sequences of operation shall be as identified in the database/ settings tables or sequences of operation shown on the drawings. The number and location of control panels shown on drawings shall be provided as a minimum.

1.2.3 Control System Points

Inputs to and outputs from the control system shall be in accordance with the Input/Output (I/O) Summary Table shown on the drawings. Each connected analog output (AO), analog input (AI), digital output (DO), digital input (DI), pulse accumulator (PA) input and other input or output device connected to the control system shall represent a "point" where referred to in this specification.

1.2.4 Symbols, Definitions, and Abbreviations

Symbols, definitions, and engineering unit abbreviations shall conform to IEEE Std 100, as applicable.

1.3 ENVIRONMENTAL CONDITIONS

Capacity and design of the air moving equipment and accessories shall be suitable for 24-hour full load service and shall meet the following criteria.

a. Location

Latitude	33.43
Longitude	112.02
Altitude (above MSL)	1106 ft
Seismic parameters	1

b. Heating Degree Days 488.

c. Winter Design Temperatures

Outside Air (Ventilation)	108 (99%)
Outside Air (Heat Loss)	107 (97.5%)
Inside Air Temperature	75 degrees F

d. Cooling Degree Days 34,521

e. Summer Design Temperatures

Outside Air (Ventilation)	108 DB (1%)
Outside Air (Ventilation)	70 MCWB (1%)
Outside Air (Heat Minimum)	31 DB (2.5%)
Outside Air (Heat Minimum)	34 (2.5%)
Inside Air Temperature	70 degrees F

f. Contaminants: dust.

1.4 SUBMITTALS

Government approval is required for submittals with a "G" designation; submittals not having a "G" designation are for information only. When used, a designation following the "G" designation identifies the office that will review the submittal for the Government. The following shall be submitted in accordance with Section 01330, SUBMITTAL PROCEDURES:

SD-02 Shop Drawings

Installation; G, RE
Wiring; G, RE
Radio Link Design; G, RE

Detail drawings containing complete piping, wiring, schematic, flow diagrams and any other details required to demonstrate that the system has been coordinated and will properly function as a unit. Piping and Instrumentation (P&ID) Drawings (prepared using industry recognized device symbols, clearly defined and describing piping designations to define the service and materials of individual pipe segments and instrument tags employing Instrument Society of America suggested identifiers).

Radio system block diagram and radio link design criteria, radio strength calculations, and a path profile drawing that clearly shows all terrain and obstructions (major buildings and trees) between the ends of each link, path length, and antenna heights); Plot profile on 4/3 earth radius profile paper and include the following parameters: transmitter power, transmission cable type, length, and losses; miscellaneous losses; type and gain of antenna; predicted median path loss, separated into free space loss and diffraction loss categories; predicted median signal level at remote receiver input; remote station receiver fade margin; predicted median link reliability.

Drawings shall include, as appropriate: product specific catalog cuts; a drawing index; a list of symbols; a series of drawings for each control system using abbreviations, symbols, nomenclature and identifiers as shown; valve schedules.

SD-03 Product Data

Instrumentation and Control System; G, RE

Manufacturer's descriptive and technical literature, performance charts and installation instructions. Product specific catalog cuts shall be in booklet form, indexed to the unique identifiers, and shall consist of data sheets that document compliance with the specification. Where multiple components are shown on a catalog cut, the application specific component shall be marked.

Meters and Sensors; G, RE

Manufacturer's descriptive and technical literature, catalog cuts, performance charts and installation instructions.

Training Manual; G, RE

Instruction manual within 180 days of Notice to Proceed.

Performance Verification Test (PVT); G, RE

The performance verification test procedure; it shall refer to the actions and expected results to demonstrate that the control system performs in accordance with the sequence of control. A list of the equipment to be used during the testing shall be included. The list shall also include manufacturer's name, model number, equipment function, the date of the latest calibration and the results of the latest calibration.

Factory Test Procedure; G, RE

Documentation containing factory test methods and procedures.

Ladder logic programming; G, RE

Ladder logic programming documentation for each PLC.

SCADA software programming; G, RE

SCADA software documentation for the server.

SCADA reports; G, RE

Documentation of each report.

SD-06 Test Reports

Factory Test Report; G, RE
Testing, Adjusting and Commissioning; G, RE
Performance Verification Test(PVT); G, RE
Endurance Test; G, RE
Radio Survey; G

Test results in report format.

SD-07 Certificates

Sensor and Control Wiring; G, RE

Certified test results for surge protection.

Testing of Ground Rods; G, RE

Certification stating that the test was performed in accordance with IEEE Std 142.

SD-10 Operation and Maintenance Data

Instrumentation and Control System; G, RE

Six complete copies of operating instructions outlining the step-by-step procedures required for system startup, operation and shutdown. The instructions shall include layout, wiring and control diagrams of the system as installed. The instructions shall include the manufacturer's name, model number, service manual, parts list and a brief description of all equipment and their basic operating features.

Six complete copies of maintenance instructions listing routine maintenance procedures, possible breakdowns and repairs and trouble shooting guides.

1.5 DATA TRANSMISSION SYSTEMS (DTS)

Provide data transmission systems for communication between the Master Telemetry Unit (MTU) and each servant Remote Telemetry Unit (RTU). The Master MTU is located at the NE 7th Ave Reservoir, and the servant RTUs are located at East and SE 7th St. Reservoirs. In addition, provide all work necessary to incorporate, as part of the radio poll, the existing RTU at Central Ave. This RTU was installed as part of the Phase 1A. project. Work includes, but is not limited to, furnishing and installing a radio transceiver, tower antenna, and ancillaries at the Central Ave site.

1.5.1 Master Telemetry Unit (MTU)

The Master Telemetry Unit (MTU) shall sequentially poll each servant Remote Telemetry Unit (RTU) to acquire site information and to issue commands. Polling time between the MTU and each servant RTU shall not exceed 10 seconds for a poll in which only field data are acquired. For a poll in which a command is issued by the Master and feedback received from the Servant, individual site polling time shall not exceed 15 seconds.

a. Communication rate shall be 9600 baud.

b. The communication link shall be narrow band, frequency hopping, spread spectrum radio in the frequency range of 902 - 928 MHz.

c. Radio frequencies will be unlicensed. Radios and related products shall conform to the requirements of 47 CFR 15.

d. The radio link between the Master MTU and each servant RTU site shall have a excess radio signal strength; i.e., fade margin, of at least 20 dB.

1.6 EQUIPMENT REQUIREMENTS

1.6.1 Materials and Equipment

Materials and equipment shall be standard unmodified products of a

manufacturer regularly engaged in the manufacturing of such products. Units of the same type of equipment shall be products of a single manufacturer. Items of the same type and purpose shall be identical and supplied by the same manufacturer, unless replaced by a new version approved by the Government.

1.6.2 Nameplates

Each major component of equipment shall have the manufacturer's name and address, and the model and serial number in a conspicuous place. Laminated plastic nameplates shall be provided for equipment devices and panels furnished. Each nameplate shall identify the device, such as pump "P-1" or valve "VLV-402". Labels shall be coordinate with the schedules and the process and instrumentation drawings. Laminated plastic shall be 1/8 inch thick, white with black center core. Nameplates shall be a minimum of 1 by 3 inches with minimum 1/4 inch high engraved block lettering. Nameplates for devices smaller than 1 by 3 inches shall be attached by a nonferrous metal chain. All other nameplates shall be attached to the device.

PART 2 PRODUCTS

2.1 GENERAL REQUIREMENTS

Equipment located outdoors, not provided with climate controlled enclosure, shall be capable of operating in the ambient temperature range indicated in paragraph ENVIRONMENTAL CONDITIONS, unless otherwise specified. Electrical equipment will conform to Section 16050 BASIC ELECTRICAL MATERIALS AND METHODS. Equipment and wiring must be in accordance with NFPA 70, with proper consideration given to environmental conditions such as moisture, dirt, corrosive agents, and hazardous area classification.

2.2 MONITORING AND CONTROL PARAMETERS

The control system shall be complete including Meters and Sensors, field preamplifiers, signal conditioners, offset and span adjustments, amplifiers, transducers, transmitters, control devices, engineering units conversions and algorithms for the applications; and shall maintain the specified end-to-end process control loop accuracy from sensor to display and final control element. Control equipment shall be powered by a 120 vAc, single phase, 60 Hz power source, with local transformers included as needed for signal transmission and subsystem operation. Connecting conductors shall be suitable for installed service. Enclosures shall be rated for NEMA 4X.

2.2.1 Transmitter

Unless indicated otherwise, each sensor shall be provided with a transmitter, selected to match the sensor. Except where specifically indicated otherwise on the drawings, the transmitter shall be provided with a four digit or analog visual display of the measured parameter and shall provide a 4 to 20 mAdc output signal proportional to the level of the measured parameter. Accuracy shall be plus or minus 1 percent of full scale reading with output error not exceeding plus or minus 0.5 percent of full scale. Transmitter shall be located where indicated, mounted

integrally with the sensor, pipe mounted, wall mounted or installed in the control panel. The distance between the sensor and transmitter shall not exceed the manufacturer's recommendation. Field preamplifiers and signal conditioners shall be included when necessary to maintain the accuracy from sensor to the programmable logic controller or recorder.

2.2.2 Liquid Service

Sensors and meters in liquid service shall be rated for continuous duty service at fluid approach velocities from 2.5 ft/s to 10 ft/s with correspondingly higher constriction velocities over a fluid temperature range from 32 degrees F to 105 degrees F at pressures up to 150 psi gage.

2.2.3 Flow Measuring Device - Propeller Meter

Propeller meter shall consist of a flanged tube, propeller meter with magnetic coupled drive, and ancillaries. The meter shall operate properly up to 150 psig and 100 degrees F fluid temperature. Accuracy shall be plus or minus 2 percent of flowrate. Propeller meter shall be molded polypropylene. Flanged tube shall be carbon steel. Provide a local display of both flowrate and totalized flow. If noted, provide a transmitter in a NEMA 4-rated enclosure.

2.2.4 Level Instrumentation

Pressure taps shall incorporate appropriate snubbers. Relays and housing shall be intrinsically safe or explosion proof as required by the NFPA hazard rating for compatibility with the contents of the tank or sump.

2.2.4.1 Conductance Electrode Switch(es)

Conductance electrodes for use in liquid systems shall consist of electrode(s), electrode holder, relays, relay enclosure, and cabling. Electrode holder shall be 316 stainless steel of mounting type suitable for the application. Electrodes shall be rod type constructed of 316 stainless steel, unless otherwise noted. Length shall be as required for the noted setpoints. Provide quantity of electrodes as required to monitor the noted setpoints. In addition, provide a grounding electrode. Relays shall be solid state and housed in a NEMA 7, explosion-proof enclosure. For each noted setpoint, provide at least one set of SPDT contacts. For each rod-type electrode, provide a PVC sheath and a spacer. Provide all required interconnecting cable.

2.2.4.2 Ultrasonic Level Sensor

The sensor shall be microprocessor based and shall provide continuous, non-contact level measurement of liquids and solids utilizing microwave pulsed time of flight measurement method. The sensor shall operate in a frequency band approved for industrial use. The sensor shall be capable of measuring in a range of 0 to 20 feet with an accuracy of plus or minus 1 percent of full scale. The sensor shall be capable of distinguishing between real echoes, reflections and background noise. The sensor shall automatically compensate for temperature changes. The sensor shall be capable of operating in a temperature range from 20 degrees F to 120

degrees F. Assembly shall be flange mounted or shall include a NPT threaded (male) mounting assembly, as shown on the drawings and of sufficient size to eliminate echoing and suitable for the installed environment indicated. Mounting assembly shall be suitable for service without requiring entry or drainage of the sump where level is being measured.

2.2.5 Pressure Instrumentation

Pressure taps shall incorporate appropriate snubbers.

2.2.5.1 Pressure Gauges

Sensing element of the pressure gauge shall be Bourdon tube. Pressure gauge accuracy shall be plus or minus 0.50 percent of full scale. Scale range shall be as noted. Dial diameter shall be 4-1/2 inch. Gauge front shall be liquid-filled with glycerin. Case material shall be black phenolic plastic with a phosphor-bronze element. Provide gauge with a brass pulsation dampener. Socket shall be brass. Case type shall be solid front. Process connection shall be lower stem mounting with a 1/2 inch NPT threaded connection.

2.3 RADIO COMMUNICATION SYSTEM

2.3.1 General Requirements

Radio communications shall be suitable for 9600 bps minimum half-duplex communication between the Master Telemetry Unit (MTU) and the servant Remote Telemetry Units (RTUs). Radio frequency shall be 902/928 mHz and of the unlicensed narrow band, frequency hopping, spread spectrum type. Radio communication links shall be in accordance with all applicable 47 CFR 15, FCC and FAA regulations. The radio communication path between the central MTU and each servant RTU shall have a minimum 20 dB fade margin, which is nominally 99.5 percent reliable. Provide antennas at heights as required to meet radio communications requirements under all weather conditions. Antenna heights shown on the drawings are minimum requirements. Based upon the radio survey, adjust heights as necessary.

2.3.2 Radio Link Design

Design radio links such that each has sufficient fade margin. Prepare radio system block diagram, summarize radio link design criteria, perform radio strength calculations, prepare a radio path profile drawing, and prepare detailed drawings. See Paragraph Submittals for further requirements.

2.3.3 Radio Survey

Perform a field radio survey. Install a temporary radio transmitter at the central master site, and take actual radio signal measurements at the central master site and each remote servant site. Issue a report that includes the recommended antenna heights, recommends the antenna type and gain, and predicts receiver fade margin at each site. The radio survey report shall supplement and verify radio link design calculations, which is

a shop drawing submittal.

2.3.4 Radio Transceivers

The radio transceivers shall operate in the 902-928 MHz Part 15 Spread Spectrum Band. The frequency hopping range shall include 8 selectable zones each containing 128 frequencies. Frequency stability shall be 1.5 part per million within the temperature range of minus 22 to 140 degrees F. Data port rate shall be 9600 bps asynchronous. Transmitter shall vary its output power from 0.1 to 1.0 watt and its duty cycle shall be continuous. Receiver bit error rate shall be less than 1 in a million at minus 110 dBm. Operating voltage shall range from 10.5 to 30 Vdc. Transceivers shall be reverse polarity protected. Transceivers shall operate properly at a relative humidity of 95 percent at 140 degrees F, non-condensing; and within a temperature range of minus 22 to 140 degrees F. Transceivers shall include the following diagnostics: received signal strength, radio and alarm status; internal temperature; signal to noise ratio; radio go/no go status; and availability of data in each frequency zone. Transceivers shall have end-to-end delays of less than 7 milliseconds. Transceivers shall be field configurable as either a master central or a remote servant.

2.3.5 Transmission Cable

The transmission cable between the radio transceiver and its antenna shall have performance characteristics in accordance with the overall system functional requirements. Cable diameter shall be at least 1/2 inch and larger if necessary to keep signal losses within acceptable limits. Furnish transmission cable with a minimum bend radius 10 inches or less and dielectric jacket. Transmission cable shall be suitable for direct burial and outdoor design environments. Terminate transmission line only in connectors rated for the required service. Furnish the transmission cable with a surge suppressor to reduce damage due to lightning discharges. Ground in accordance with vendor's recommendation.

2.3.6 Radio Antenna

Provide antennas whose type (Omni or Yagi), mounting elevation, and orientation shall achieve the overall system functional requirements. Antenna gain shall be such that the radiated power from its radio site shall comply with article part 247 of 47 CFR 15. Antennas shall be suitable for outdoor design environments. Each antenna shall provide a low resistance, dc path to ground for lightning protection. Antenna type for each site shall be as shown on the drawings.

2.3.7 Radio Towers

Provide towers to support each antenna at an elevation and orientation necessary to achieve the functional requirements. Towers shall be suitable for outdoor environmental conditions, adequate support, and protection for transmission cables, and complete with all necessary mounting accessories. All towers shall be self supporting and not require guy wires. Towers shall be hot-dipped galvanized after fabrication. Towers fabrication and installation shall be in accordance with all applicable building codes. Procure radio towers only after the radio surveys confirms that the antenna

heights shown or noted in the design provide satisfactory radio communications.

2.4 PROGRAMMABLE LOGIC CONTROLLER (PLC)

2.4.1 PLC General Requirements

PLCs shall be micro-processor based, capable of receiving discrete and analog inputs and, through programming, shall be able to control discrete and analog output functions, perform data handling operations and communicate with external devices. PLCs shall meet the requirements of Class A computing devices, and shall be labeled as set forth in 47 CFR 15 and shall be able to withstand conducted susceptibility test as outlined in NEMA ICS 1, NEMA ICS 2, NEMA ICS 3, or IEEE C37.90.1. PLCs shall function properly at temperatures between 32 and 122 degrees F at 5 to 95 percent relative humidity non-condensing and shall tolerate storage temperatures between minus 40 and plus 140 degrees Fat 5 to 95 percent relative humidity non-condensing.

2.4.2 Modular PLC

PLCs shall be based on a modular, field expandable design allowing the system to be tailored to the process control application. The system shall be expandable through the use of additional hardware and/or user software. As a minimum, the PLC shall include a mounting backplane, power supply module, central processing unit (CPU) module, communications module, and input/output (I/O) module. The modules shall be grouped together in a mounting rack or cabinet. The mounting rack backplane shall provide the communications mechanism to fully integrate the individual modules located within the rack. Modules shall plug directly into the backplane. The use of wire connectors between modules will not be allowed. The rack size shall be as needed to hold the equipment necessary while performing the required control functions. The system configuration shall allow for the removal and/or installation of modules under power.

2.4.2.1 Central Processing Unit (CPU) Module

The CPU module shall be a self contained, microprocessor based unit that provides time of day, scanning, application (ladder rung logic) program execution, storage of application programs, storage of numerical values related to the application process and logic, I/O bus traffic control, peripheral and external device communications and self diagnostics.

2.4.2.2 Communications Module

The communications module shall allow peer-to-peer communication with other PLCs and shall allow the PLC to communicate with the central station, or workstation. The communication module shall utilize the manufacturer's standard communication architecture and protocol, ethernet architecture and protocol or a combination of these. The communication module shall allow programming of the PLC to be done locally through the use of a laptop computer or from the central station or remote workstation.

2.4.2.3 Power Supply Module

One or more power supply modules shall be provided as necessary to power other modules installed in the same cabinet. Power supply modules shall plug directly into the backplane. Auxiliary power supplies may be used to supply power to remote cabinets or modules.

a. Power supply modules shall use AC power with a nominal voltage of 120 vAc plus or minus 5 percent. The power supply module shall monitor the incoming line voltage level and shall provide over current and over voltage protection. If the voltage level is detected as being out of range the power supply module shall continue to provide power for an adequate amount of time to allow for a safe and orderly shutdown. Power supply modules shall be capable of withstanding a power loss for a minimum of 20 milliseconds while still remaining in operation and providing adequate power to all connected modules.

b. Each power supply module shall be provided with an on-off switch integral to the module. If the manufacturer's standard power supply module is not provided with an on-off switch, a miniature toggle type switch shall be installed near the PLC and shall be clearly labeled as to its function.

c. Power supply modules shall be provided with an indicating light which shall be lit when the module is operating properly.

2.4.2.4 Input/Output (I/O) Modules

Modules shall be self contained, microprocessor based units that provide an interface to field devices. The modules shall be located in the same mounting rack as the other PLC components. The unit shall plug directly into the backplane of the mounting rack. Each module shall contain visual indication to display the on-off status of individual inputs or outputs.

2.4.2.5 Operator Interface Unit

Where indicated, PLC shall be furnished with an Operator Interface Unit (OIU) that allows the operator to monitor and control process equipment. Display shall be color and be of the Active Matrix Thin Film Transistor (TFT) type with at least 640 X 480 pixels. Nominal display dimensions shall be 8 inches X 6 inches. Backlight shall be field replaceable. Operator interface shall be by touch screen. OIU shall include a built-in library of push buttons, selectors, numeric entry devices, diagnostic indicators, and message displays, and variable displays. Graphics shall be able to be customized to meet the functional requirements. OIU shall have alarm capabilities, including an alarm list to record and display important data on triggered alarms; and an alarm message block that notifies the operator when an alarm occurs by displaying an alarm message and buttons for responding to an alarm. Temperature operating range shall be between 32 and 131 degrees F. OIU NEMA rating shall be NEMA 4X.

2.4.3 Loop PLC

PLCs shall be single or multiple loop controllers depending on the control

system requirements. Controllers shall be self contained and shall include a central processing unit (CPU), program memory, power supply, input/output capability, network communications capability and display/keyboard. The controller shall have a scaleable process variable for each loop. Analog input signals shall be based on the use of proportional, integral and derivative (PID) control logic. Analog outputs shall be configured as direct acting or reverse acting. The controller shall have keyboard, display, auto/manual selection for control of each loop output, remote setpoint, adjustment/local setpoint adjustment selection with adjustable high-end and low-end limits, ratio and bias adjustment on remote setpoint input, operator-initiated self-tune/manual-tune selection and anti-reset wind-up feature. Controller shall power analog output loops to 20 mAdc when connected to a load of 600 ohms.

2.4.3.1 Central Processing Unit (CPU)

The central processing unit shall be microprocessor based and shall provide time of day, scanning, application program (ladder rung logic) execution, storage of application programs, storage of numerical values related to the applications process and logic, I/O bus traffic control, peripheral and external device communications and self diagnostics.

2.4.3.2 Power Requirements

Each controller shall be powered by 120 vAc. Power consumption shall not exceed 25 watts. Controller shall provide electrical noise isolation between the AC power line and the process variable inputs, remote setpoint inputs and output signals of not less than 100 dB at 60 Hertz common mode rejection ration and not less than 60 dB at 60 hertz normal-mode rejection ration.

2.4.3.3 On-Off Switch

Each controller shall be provided with an integral on-off switch. If the controller is not provided with a manufacturers standard on-off switch, a miniature toggle type switch shall be installed near the controller and shall be clearly labeled as to its function.

2.4.3.4 Parameter Input and Display

Control parameters shall be entered and displayed directly, in the correct engineering units, through a series of keystrokes on a front panel display with decimal point and polarity indication. Display shall be in English units.

2.4.3.5 Self Tuning

Controllers shall be provided with self-tuning operation which shall apply to proportional, integral and derivative modes of control and shall modify the mode constants as required. Self-tuning shall only be in operation when selected from the front panel.

2.4.3.6 Manual Tuning

Controllers shall be provided with manual tuning operation which shall apply to proportional, integral and derivative modes of control, by means of individually adjustable mode constants. These adjustments shall be set for the appropriate value if a particular control mode action is required or to zero if that particular mode is not desired. The proportional mode constant shall be adjustable from 0 to 200 percent of the input signal range. The integral mode constant shall be adjustable from 0 to 20 repeats per minute. The derivative mode constant shall be adjustable from 0 to 5 minutes.

2.4.4 Program Storage/Memory Requirements

The CPU shall utilize the manufacturer's standard non-volatile memory for the operating system. The controller shall have electronically erasable, programmable, read only memory (EEPROM) for storage of user programs and battery backed RAM for application memory. The EEPROM shall be loaded through the controller keypad, central station or through the use of a laptop computer. The CPU memory capacity shall be based on the system's control requirements. The memory capacity shall be sized such that, when the system is completely programmed and functional, no more than 50 percent of the memory allocated for these purposes is used.

2.4.5 Input/Output Characteristics

Each controller shall allow for analog input, analog output, discrete input and discrete output. The number and type of inputs and outputs for the system shall be as shown on the drawings and shall comply with the sequence of control. The system capacity shall include a minimum of 20 percent spare input and output points (no less than two points) for each point type provided. During normal operation, a malfunction in any input/output channel shall affect the operation of that channel only and shall not affect the operation of the CPU or any other channel. Analog input circuits shall be available in 4-20 mA. Discrete input circuits shall be available in 79-132 vAc. All input circuits shall have a minimum optical isolation of 1500 VRMS and shall be filtered to guard against high voltage transients from the externally connected devices. Analog output circuits shall be available in 4-20 mA. Discrete output circuits shall be available in 79-132 vAc. All output circuits shall have a minimum optical isolation of 1500 VRMS and shall be filtered to guard against high voltage transients from the externally connected devices.

2.4.6 Wiring Connections

Wiring connections shall be heavy duty, self lifting, pressure type screw terminals to provide easy wire insertion and secure connections. The terminals shall accept two #14 AWG wires. A hinged protective cover shall be provided over the wiring connections. The cover shall have write-on areas for identification of the external circuits.

2.4.7 On-Off Switch

Each controller shall be provided with an integral on-off power switch. If the controller is not provided with a manufacturer's standard on-off switch, a miniature toggle type switch shall be installed in the control

panel near the controller and shall be clearly labeled as to its function.

2.4.8 Diagnostics

Each PLC shall have diagnostic routines implemented in firmware. The CPU shall continuously perform self-diagnostic routines that will provide information on the configuration and status of the CPU, memory, communications and input/output. The diagnostic routines shall be regularly performed during normal system operation. A portion of the scan time of the controller shall be dedicated to performing these housekeeping functions. In addition, a more extensive diagnostic routine shall be performed at power up and during normal system shutdown. The CPU shall log input/output and system faults in fault tables which shall be accessible for display. When a fault affects input/output or communications modules the CPU shall shut down only the hardware affected and continue operation by utilizing the healthy system components. All faults shall be annunciated at the PLC. Diagnostic software shall be useable in conjunction with the portable tester.

2.4.9 Accuracy

Controllers shall have an accuracy of plus or minus 0.25 percent of input span.

2.5 PLC SOFTWARE

All PLC software described in this specification shall be furnished as part of the complete control system.

Portable Tester/Workstation: A portable tester/workstation shall be provided and shall be connectable to any PLC. The portable tester/workstation shall consist of a portable computer with a nominal 10 inch active color matrix liquid crystal display, capable of displaying up to 256 colors at a minimum resolution of 640 x 480 pixels, 64 bit microprocessor operating at a minimum of 200 MHz. The portable tester/workstation shall have, as a minimum, 8 GB hard drive, 32 megabytes of memory, integral pointing device, serial and parallel ports, color VGA video port for an external color monitor, 3.5 inch floppy disk drive, modem, PCMCIA type 3 slot, rechargeable battery, battery charger and a compatible network adapter. The portable tester/workstation shall be provided with the proper cables, connectors, adapters and software required to connect to and be compatible with the PLCs. Connection may be made directly to the PLCs or to the communications network. The tester/work station shall be capable of performing all workstation functions contingent on proper password level.

Communication and Programming Device: A hand-held communication and programming device shall be provided. The communication and programming device shall connect to the PLC directly for readout of variables, override, control, servicing, troubleshooting and adjustment of control parameters. The device shall be provided with all necessary cables, connectors and adapters to allow connection to the PLC. The device shall communicate in English language for inquiry, reporting and programming purposes.

2.5.1 Operating System

Each PLC shall be provided with the manufacturer's standard operating system software package. The PLC shall maintain a point database in its memory that includes all parameters, constraints and the latest value or status of all points connected to the PLC. Execution of the PLC application programs shall use the data in memory resident files. The operating system shall support a full compliment of process control functions. It shall be possible to define these functions using a mix of function blocks, ladder logic diagrams, sequential function charts and text programming. Programming methods and interactions shall be based on IEC 61131-3. A combination of the programming methods shall be possible within a single controller. The operating system shall allow loading of software locally or from the central station and data files from the portable tester. It shall also support data entry and diagnostics using an operator interface panel attached directly to the PLC. Each PLC shall be capable of operating in stand alone mode.

2.5.1.1 Startup

The PLC shall have startup software that causes automatic commencement of operation without human intervention, including startup of all connected I/O functions. A PLC restart program based on detection of power failure at the PLC shall be included in the PLC software. The restart program shall include start time delays between successive commands to prevent demand surges or overload trips.

2.5.1.2 Failure Mode

Upon failure for any reason, each PLC shall perform an orderly shutdown and force all PLC outputs to a predetermined (failure mode) state, consistent with the failure modes shown and the associated control device.

2.5.2 Functions

The controller operating system shall be able to scan inputs, control outputs, and read and write to its internal memory in order to perform the required control as indicated in the sequence of control on the drawings. The controller shall periodically perform self diagnostics to verify that it is functioning properly.

2.5.2.1 Analog Monitoring

The system shall measure and transmit all analog values including calculated analog points.

2.5.2.2 Logic (Virtual)

Logic (virtual) points shall be software points entered in the point database which are not directly associated with a physical I/O function. Logic (virtual) points shall be analog or digital points created by calculation from any combination of digital and analog points, or other data having all the properties of real points, including alarms, without

the associated hardware. Logic (virtual) points shall be defined or calculated and entered into the database by the Contractor. The calculated analog point shall have point identification in the same format as any other analog point.

2.5.2.3 State Variables

If an analog point represents more than two (up to 8) specific states, each state shall be nameable. For example, a level sensor shall be displayed at its measured engineering units plus a state variable with named states usable in programs or for display such as low alarm/low/normal/high/high alarm.

2.5.2.4 Analog Totalization

Any analog point shall be operator assignable to the totalization program. Up to eight analog values shall be totalized within a selectable time period.

2.5.2.5 Trending

Any analog or calculated point shall be operator assignable to the trend program. Up to eight points shall be sampled at individually assigned intervals, selectable between 1 minute and 2 hours. A minimum of the most recent 128 samples of each trended point shall be stored. The sample intervals shall be able to be defined, modified, or deleted online.

2.5.3 Alarm Processing

Each PLC shall have alarm processing software for AI, DI, and PA alarms for all real and virtual points connected to that PLC.

2.5.3.1 Digital Alarms

Digital alarms are those abnormal conditions indicated by DIs as specified and shown. The system shall automatically suppress analog alarm reporting associated with a digital point when that point is turned off.

2.5.3.2 Analog Alarms

Analog alarms are those conditions higher or lower than a defined value, as measured by an AI. Analog readings shall be compared to predefined high and low limits, and alarmed each time a value enters or returns from a limit condition. Unique high and low limits shall be assigned to each analog point in the system. In control point adjustment (CPA) applications, key the limit to a finite deviation traveling with the setpoint. The system shall automatically suppress analog alarm reporting associated with an analog point when that analog point is turned off.

2.5.3.3 Pulse Accumulator (PA) Alarms

Pulse accumulator alarms are those conditions calculated from totalized values of accumulator inputs or PA input rates that are outside defined limits as specified and shown. PA totalized values shall be compared to

predefined limits and alarmed each time a value enters a limit condition. Unique limits shall be assigned to each PA point in the system.

2.5.4 Constraints

2.5.4.1 Equipment Constraints Definitions

Each control point in the database shall have PLC resident constraints defined and entered by the Contractor, including as applicable: maximum starts (cycles) per hour; minimum off time; minimum on time; high limit (value in engineering units); and low limit (value in engineering units).

2.5.4.2 Constraints Checks

All control devices connected to the system shall have the PLC constraints checked and passed before each command is issued. Each command point shall have unique constraints assigned. High and low "reasonableness" values or one differential "rate-of-change" value shall be assigned to each AI. Each individual point shall be capable of being selectively disabled by the operator from the central station.

2.5.5 Control Sequences and Control Loops

Specific functions to be implemented are defined in individual system control sequences and database tables shown on the drawings, and shall include, as applicable, the following functions: PI control shall provide proportional control and proportional plus integral control; two position control shall provide control for a two state device by comparing a set point against a process variable and an established dead band; floating point control shall exercise control when an error signal exceeds a selected dead band, and shall maintain control until the error is within the dead band limits; signal selection shall allow the selection of the highest or lowest analog value from a group of analog values as the basis of control and shall include the ability to cascade analog values so that large numbers of inputs can be reduced to one or two outputs; signal averaging shall allow the mathematical calculation of the average analog value from a group of analog values as the basis of control and shall include the ability to "weight" the individual analog values so that the function output can be biased as necessary to achieve proper control; reset function shall develop an AO based on up to two AIs and one operator specified reset schedule.

2.5.6 Command Priorities

A scheme of priority levels shall be provided to prevent interaction of a command of low priority with a command of higher priority. Override commands entered by the operator shall have higher priority than those emanating from applications programs.

2.5.7 Resident Application Software

The Contractor shall provide resident applications programs developed in accordance with paragraph Graphical Object Oriented Programming to achieve the sequences of operation, parameters, constraints, and interlocks

necessary to provide control of the process systems connected to the control system. All application programs shall be resident in the PLC and shall execute in the PLC, and shall coordinate with each other, to insure that no conflicts or contentions remain unresolved.

2.5.7.1 Program Inputs and Outputs

The Contractor shall use program inputs listed for each application program to calculate the required program outputs. Where specific program inputs are not available, a "default" value or virtual point appropriate for the equipment being controlled and the proposed sequence of operation shall be provided to replace the missing input, thus allowing the application program to operate.

2.5.7.2 Failure Mode

In the event of a PLC failure, the controlled equipment shall continue to function in the failure mode shown on the drawings.

2.6 SUPERVISORY CONTROL AND DATA ACQUISITION SYSTEM (SCADA) COMPUTER SYSTEM

2.6.1 SCADA General Requirements

Provide a complete SCADA System that shall interface with the MTU at the NE 7th Ave site. Via this interface, the SCADA System shall acquire data from the MTU and the two RTU sites. Also provide supervisory control of the three sites. Provide a development version of SCADA server software. Load this software onto the computer server at the NE 7th Ave site. SCADA software shall be suitable for an unlimited number of points. Configure computer screens to implement the required control sequences and control loops. Develop at least 10 computer screens. Also provide auto-dialer software. Automatically dial critical alarms to a phone number assigned by the Contracting Officer. Provide a Local Area Network (LAN) that connects the SCADA computer to the MTU PLC. Network protocol shall be 10 Base T ethernet. Provide a LAN switch with two unused ports. One port shall be reserved for use for connection to a laptop computer. The other port shall be connected in the future to a client workstation located in the O&M facility. Due to rapid technological change, the computer hardware requirements listed are a bare minimum. It is expected that the Process Control System supplier shall provide computers with upgraded features that are commonly available at the time of purchase.

2.6.2 Industrial Ethernet Switch

Industrial Ethernet switch shall interconnect and switch Ethernet nodes. Switch shall consist of chassis, required modules, mounting assembly, and network traffic and monitoring software. Switch shall support up to 4000 MAC addresses per module. Switch shall be fully compliant, and have MTBF reliability of at least 1 million hours. Unit shall be rated for an operating temperature up to 158 degrees F. Power supply will be 10-30 VDC. Unit shall provide at least eight 10/100 Base T ports and two Base FX Multimode fiber ports. Base T ports shall be compatible with Category 5 cable. Fiber ports shall be compatible with 62.5/125 micro m fiber at 1300 nm. Provide network traffic monitoring software.

2.6.3 Industrial Computer

Industrial computer shall be rated for operating in a temperature range of 32 degrees F to 122 degrees F. Unit shall be able to withstand a shock of 15 g peak acceleration of 11 msec duration. Unit front shall be rated NEMA 4X, and shall mount directly on the panel front. Processor shall be at least a Pentium III with a speed of at least 850 MHz. Memory shall be at least 512 MB SDRAM. Operating system shall be Windows 2000, or higher. Software shall include a Structured Query Language (SQL) driver. Provide software so touchscreen functions are equivalent to both a left and right hand mouse. Provide at least a 20 GB hard drive, a floppy drive, and a CD-ROM drive. Provide the following ports: two RS-232; one configurable RS-232/422/485; two parallel ports; two USB ports, one 10BaseT/100 Base-TX Ethernet port; and one keyboard/mouse port. Industrial computer shall be compatible with the dial-up line provided for the project. Provide an industrial modem rated for operating temperatures between 32 and 140 degrees F. Modem shall support a communication speed of at least 28.8 kbps.

2.6.4 SCADA Software

Once configured, SCADA server software shall provide supervisory control and data acquisition functions in real-time applications. Unless otherwise noted provide development server version. Software shall be compatible with the operating system of its associated computer. Package shall be true 32-bit and shall be pre-emptive multitasking. Software includes a Structured Query Language (SQL) package that is Open Database Connectivity (ODBC) compliant. Package can communicate with PLCs, including block transfer. Software supports a client/server architecture and is both Ethernet network and TCP/IP protocol compliant. Graphic displays are standard windows files. Graphic creation is interactive object oriented. Alarm handling supports up to three alarm priorities for each alarm type. Archived data is stored in files in compressed format. Archived data can be printed in trend graphic displays in either color or black and white. Security management is a user-based security system. Software includes a development server, historian, trending and alarm packages.

2.6.5 Autodialing Alarm Software

Software notifies staff by pager or phone of alarm conditions in SCADA software database. Software package shall be compatible with the operating system of its associated computer. Software shall be compatible with third party data modem installed and pager type that the Contracting Officer uses. Software package supports voice call over a telephone dial-up and pager call. Voice call verbally annunciates alarms over a standard voice-grade telephone line. Pre-configure telephone numbers to be called and their order of calling. Alarms can be acknowledged from a touch tone phone. Pager call notifies staff of alarms via alphanumeric or numeric-only pager messages. Software includes a test button function. Software shall allow customized day and time settings, according to staff availability. Alarm grouping is unlimited. Alarms are archived.

2.7 CONTROL PANELS

2.7.1 Components

2.7.1.1 Enclosures

The enclosure for each control panel shall conform to the requirements of NEMA 250 for the types specified. Finish color shall be the manufacturer's standard, unless otherwise indicated. Damaged surfaces shall be repaired and refinished using original type finish. Enclosures for installation in mechanical equipment rooms shall be Type 4; those for installation in clean, dry indoor occupied space may be Type 1; other locations shall be as otherwise specified or shown. Enclosures for equipment installed outdoors shall be Type 4 or as shown. Enclosures for installation in a corrosive environment shall be Type 4X and shall be constructed of stainless steel. Painted steel shall not be allowed for use in a corrosive environment. Enclosure shall be provided with a single, continuously hinged exterior door with print pocket, 3-point latching mechanism and key lock and a single, continuously hinged interior door.

2.7.1.2 Controllers

Controllers shall be in accordance with paragraph Programmable Logic Controller (PLC).

2.7.1.3 Standard Indicator Light

Indicator lights shall comply with NEMA ICS 1, NEMA ICS 2 and UL 508. Lights shall be heavy duty, round and shall mount in a 0.875 inch mounting hole. Lights shall be NEMA 4X, watertight and corrosion-resistant, unless otherwise noted. Indicator lights shall be LED type and shall operate at 120 vAc or 24 vDc. Long life bulbs shall be used. Indicator light shall be provided with a legend plate labeled as shown on the drawings. Lens color shall be as indicated on the drawings. Lights shall be push to test (lamp) type.

2.7.1.4 Selector Switches

Selector switches shall comply with NEMA ICS 1, NEMA ICS 2 and UL 508. Selector switches shall be heavy duty, round and shall mount in a 0.875 inch mounting hole. Selector switches shall be NEMA 4X, watertight and corrosion-resistant, unless otherwise noted.The number of positions shall be as indicated on the drawings. Switches shall be non-illuminated. Switches shall be rated for 600 volts, 10 amperes continuous. Selector switches shall be provided with a legend plate labeled as shown on the drawings. Where indicated or required, dual auxiliary contacts shall be provided for the automatic position to provide position sensing at the central station or workstation. Auxiliary contacts shall be rated for 120 vAc, 1A as a minimum. Where indicated on the drawings, switches shall be key operated. All keys shall be identical.

2.7.1.5 Push Buttons

Push buttons shall comply with NEMA ICS 1, NEMA ICS 2 and UL 508. Push buttons shall be heavy duty, round and shall mount in a 0.875 inch mounting hole. Push buttons shall be NEMA 4X, watertight and corrosion-resistant,

unless otherwise noted. The number and type of contacts shall be as indicated on the drawings or required by the Sequence of Control. Push buttons shall be rated for 600 volts, 10 amperes continuous. Push buttons shall be provided with a legend plate labeled as shown on the drawings.

2.7.1.6 Relays

Relays shall comply with IEEE C37.90. Relays shall be as required by the Sequence of Control. Relay coil shall be 120 vAc and shall be provided with matching mounting socket. Power consumption shall not be greater than 3 watts.

2.7.1.7 Relays, Long Distance Signal Transmission

Relays suitable for long-distance signal transmission shall be solid state that are liquid epoxy-filled. Input to output isolation shall be 4000 volts minimum. Turn-on and turn-off times shall be ½ cycle maximum. Relays shall have zero voltage turn-on with an allowable signal voltage of 32 volts dc. Signal pick-up and drop-out voltages shall be 3 Vdc and 1 Vdc, respectively. Nominal signal input resistance shall be 1000 ohms. Relays shall be able to withstand a 1-cycle surge of 110 amps. Contact ratings shall be 10 amps at 120-volts ac.

2.7.1.8 Signal Isolators

Each isolator shall provide three-way isolation of a 4-20 mA dc input signal, the 4-20 mA dc output signal, and the external power supply. Include an isolator-mounting bracket. Provide three-way isolation for common mode voltages up to 250 Vac or 354V dc of ground on a continuous basis. Unit shall be able to withstand 1500 Vac dielectric strength test for 60 seconds without breakdown. Accuracy shall be plus or minus 0.1 percent of output span. Unit shall be capable of operating over a temperature range of minus 13 degrees F to plus 185 degrees F. Input impedance shall be 75 ohms. Output shall drive loads of at least 650 ohms. Power shall be 120 Vac.

2.7.1.9 Digital Indicators

Each digital indicator shall provide a 4-digit LED display of an analog signal. Unit shall be front panel mounted and rated NEMA 4X. Indicator shall operate over a temperature range of zero to 65 degrees Centigrade. Accuracy shall be 0.05 percent of calibrated span with a display update rate of less than 5 seconds. Process input shall be field selectable between plus or minus 20 mA dc and plus or minus 10 V dc. Decimal point shall be configurable up to 3 decimal places. LED digits shall be nominally 1/2 inch high. Input impedance for the current range shall nominally be 50 ohms.

2.7.1.10 Terminal Blocks

Terminal blocks shall comply with NEMA ICS 4 and UL 1059. Terminal blocks for conductors exiting control panels shall be two-way type with double terminals, one for internal wiring connections and the other for external wiring connections. Terminal blocks shall be made of bakelite or other

suitable insulating material with full deep barriers between each pair of terminals. A terminal identification strip shall form part of the terminal block and each terminal shall be identified by a number in accordance with the numbering scheme on the approved wiring diagrams.

2.7.1.11 Alarm Horns

Alarm horns shall be provided where indicated on the drawings. Horns shall be vibrating type and shall comply with UL 508. Horns shall provide 100 dB at 10 feet. Exterior mounted horns shall be weather proof by design or shall be mounted in a weather proof enclosure that does not reduce the effectiveness of the horn.

2.7.2 Panel Assembly

Control panels shall be factory assembled and shipped to the jobsite as a single unit. Panels shall be fabricated as indicated and devices shall be mounted as shown or required. Each panel shall be fabricated as a bottom-entry connection point for control system electrical power, control system wiring and radio transmission cable.

2.7.3 Electrical Requirements

Each panel shall be powered by a dedicated 120 volts ac sized as recommended by the equipment manufacturer, and a disconnect switch located inside the panel. Wiring shall terminate inside the panel on terminal blocks. Electrical work shall be as specified in Section 16050 BASIC ELECTRICAL MATERIALS AND METHODS and as shown on the drawings.

2.7.4 Grounding

Control panel enclosures shall be equipped with a solid copper ground bus or equivalent. The ground bus shall be securely anchored to the enclosure so as to effectively ground the entire structure. Clamp-type terminals sized large enough to carry the maximum expected current shall be provided on the ground bus for grounding cables. Where a definite circuit ground is required, a single wire not less than #10 AWG shall run independently to the panel ground bus and shall be fastened to the ground bus with a bolted terminal lug. Cases of instruments, relays and other devices shall be effectively grounded through the enclosures steel structure unless otherwise indicated. Insulated wiring having a continuous rated current of not less than the circuit fuse rating shall be used for grounding. Grounding terminals of power receptacles shall be solidly grounded to the panel enclosure.

2.7.5 Convenience Outlet

A 120 volt ac, 20 amp, ground fault interruption (GFI) type duplex convenience outlet shall be provided inside the panel. The outlet circuit shall be separate from the panel power circuit.

2.7.6 Panel Interior Light

Each control panel shall be provided with a 40 watt fluorescent light. The

light shall be operated by a manual on-off switch mounted on the interior door of the enclosure. The light shall be powered by the same circuit as the convenience outlet.

2.7.7 Ventilation System

Where indicated, control panel shall be provided with two single phase, 120 volt ac ventilation fans. Each fan shall supply a minimum of 100 cfm of ventilation air through the enclosure. Each fan shall be provided with a line voltage thermostat. Thermostat setpoints shall be adjustable in a range of 70 to 140 degrees F as a minimum. Each supply and exhaust grille shall contain a filter that is easily removed for cleaning or replacement.

2.7.8 Heating System

Where indicated, control panel(s) shall be provided with a thermostatically controlled electric heater capable of maintaining an enclosure temperature of 40 degrees F when continuously exposed to an ambient temperature of 20 degrees F.

2.7.9 Air Conditioning System, Outdoor, Closed Loop

Where indicated, control panel shall be provided with a mechanical refrigeration air conditioning system. The system shall be capable of maintaining a temperature of 100 degrees F inside the enclosure with all equipment in the panel operating and while continuously exposed to full sunlight and an ambient air temperature of 115 degrees F. The compressor and condenser shall be located outside the control panel enclosure. Provisions shall be made to remove condensate from the control panel and to protect all devices within the enclosure from condensate.

The air conditioner shall provide closed-loop cooling. The recirculated clean air in the control panel being cooled is kept separate from the ambient air flow system. The air conditioner shall be suitable for outdoor service. The enclosure of the air conditioner shall be rated NEMA 4X and made of 304 stainless steel.

2.7.10 Battery Power Supply System

Where indicated, control panel(s) shall be provided with a battery power supply system, which includes an ac/dc converter, a battery charger, and dc/dc converters. The PLC power supply shall be configured to trickle charge the battery when ac power is active, and fail over to the battery when ac power is off. Provide batteries that are sufficient to power the RTU for a minimum of 4 hours after loss of 120 volt ac input power. Batteries shall be sealed lead acid/calcium gelled electrolyte maintenance-free type with rated trickle charge like in excess of two years.

2.8 DATA COMMUNICATION REQUIREMENTS

Control system data communications shall support the specified functions and control system configuration shown on the drawings.

2.8.1 Error Detection and Retransmission

Asynchronous transmission system shall use cyclic code error detection methods. The predicted undetected error rate shall not exceed 1 bit in 1 billion. A message shall be in error if one bit is received incorrectly. The system shall retransmit messages with detected errors. Where a LAN is not utilized for data transmission, a 2-digit decimal number shall be operator assignable to each communication link representing the number of retransmission attempts. When the number of consecutive retransmission attempts equals the assigned quantity, the central station shall close down transmission to that particular device, and print an alarm message. The operator shall manually reopen any communications line after automatic closedown, subject to the same error checking and automatic closedown procedures in effect before the first automatic closedown. The system shall monitor the frequency of data transmission errors for display and logging.

2.9 FACTORY TEST

The control system shall be tested at the factory prior to shipment. Certification of a comprehensive Y2K compliance testing program is required. Written notification of planned testing shall be given to the Government at least 21 days prior to testing, and in no case shall notice be given until after the Contractor has received written Government approval of the test procedures.

2.9.1 Factory Test Setup

The Contractor shall assemble and integrate the factory test setup as specified to prove that performance of the system satisfies all requirements of this project, including system communications requirements in accordance with the approved test procedures. The factory test shall take place during regular daytime working hours on weekdays. Equipment used shall be the same equipment that is to be delivered to the site. The factory test setup shall include the following:

	Factory Test
control panel	not less than two control panels: at least one of each type used in the system plus at least one per DTS type
test set	one of each type
portable tester	one of each type
communications circuits	one of each type and speed to be utilized in the proposed system including bridges, modems, encoder/decoders, transceivers and repeaters.
surge protection equipment	for power, communications, I/O functions and networks
I/O functions	sufficient to demonstrate the I/O

	Factory Test
	capability and system normal operation
software	software required for proper operation of the proposed system including application programs and sequences of operation

2.9.2 Factory Test Procedure

Test procedures shall define the tests required to ensure that the system meets technical, operational, and performance requirements. The test procedures shall define location of tests, milestones for the tests, and identify simulation programs, equipment, personnel, facilities, and supplies required. The test procedures shall provide for testing all control system capabilities and functions specified and shown. The procedures shall cover actual equipment and sequences to be used by the Contractor for the specified project and shall consist of detailed instructions for test setup, execution, and evaluation of test results. The test reports shall document results of the tests. Reports shall be delivered to the Government within 7 days after completion of each test. Surge testing need not be conducted if the Contractor can provide acceptable documented proof that such testing has been satisfactorily demonstrated to the Government with identical surge protection applied. The procedures shall include the following:

	Test Procedure
equipment	block diagram
hardware and software	descriptions
commands	operator commands
I/O functions	test database points with failure modes
passwords	required for each operator access level
each type of digital and analog point in the test database	description
test equipment	list
surge protection	circuit diagrams
inputs required (I/O point values and status) and corresponding expected results of each set of input values	for each application program
default values	for the application program inputs not implemented or provided for in the contract documents for the application programs to

Test Procedure

be tested.

2.9.3 Factory Test Report

Original copies of data produced during the factory test, including results of each demonstration procedure, shall be delivered to the Government at the conclusion of the test, prior to Government approval of the factory test. The report shall be arranged so that commands, responses, and data acquired are correlated to allow logical interpretation of the data.

PART 3 EXECUTION

3.1 EQUIPMENT INSTALLATION REQUIREMENTS

3.1.1 Installation

The Contractor shall install system components and appurtenances in accordance with the manufacturer's instructions and shall provide necessary interconnections, services, and adjustments required for a complete and operable system. Instrumentation and communication equipment and cable grounding shall be installed as necessary to preclude ground loops, noise, and surges from adversely affecting system operation. The Contractor shall adjust or replace devices not conforming to the required accuracies. Factory sealed devices shall be replaced (rather than adjusted). Wiring in exposed areas, including low voltage wiring, shall be installed in metallic raceways or EMT conduit as specified in Section 16110 RACEWAYS. Wiring in air plenum areas installed without conduit shall be plenum-rated per NFPA 70.

3.1.1.1 Isolation, Penetrations of Buildings and Clearance from Equipment

Dielectric isolation shall be provided where dissimilar metals are used for connection and support. Penetrations through and mounting holes in the building exteriors shall be made watertight. Holes in concrete, brick, steel and wood walls shall be drilled or core drilled with proper equipment; conduits installed through openings shall be sealed with materials which are compatible with existing materials. Openings shall be sealed with materials which meet the requirements of NFPA 70. Installation shall provide clearance for control-system maintenance. Control system installation shall not interfere with the clearance requirements for mechanical and electrical system maintenance.

3.1.1.2 Device Mounting

Devices shall be installed in accordance with manufacturers' recommendations and as shown. Control devices to be installed in piping shall be provided with required gaskets, flanges, thermal compounds, insulation, piping, fittings, and manual valves for shutoff, equalization, purging, and calibration. Any deviations shall be documented by the Contractor and submitted to the Government for approval prior to mounting. Damaged insulation shall be replaced or repaired after devices are installed to match existing work. Damaged galvanized surfaces shall be repaired by touching up with zinc paint.

3.1.2 Sequences of Operation

The Contractor shall study the operation and sequence of local equipment controls, as a part of the conditions report, and note any deviations from the described sequences of operation on the contract drawings. The Contractor shall make necessary adjustments to make the equipment operate in an optimum manner and shall fully document changes made.

3.2 INSTALLATION OF EQUIPMENT

The Contractor shall install equipment as specified, as shown and as required in the manufacturer's instructions for a complete and fully operational control system.

3.2.1 Control Panels

Control panels shall be located as indicated on the drawings. Devices located in the control panels shall be as shown on the drawings or as needed to provide the indicated control sequences.

3.2.2 Flow Measuring Device

Fluid flow instruments shall be installed in accordance with ASME FM, unless otherwise indicated in the specification. The minimum straight unobstructed piping for the flowmeter installation shall be 10.0 pipe diameters upstream and 5.0 pipe diameters downstream. Meters for gases and vapors shall be installed in vertical piping, and meters for liquids shall be installed in horizontal piping, unless otherwise recommended by the manufacturer or indicated in the specifications.

3.2.2.1 Propeller Meter

Meter shall be mounted in accordance with manufacturer's published instructions.

3.2.3 Level Instruments

3.2.3.1 Conductance Electrodes

Switches shall be installed in accordance with manufacturer's published instructions. For multiple electrodes, provide spacers to enhance support.

3.2.3.2 Ultrasonic Sensor

Sensor shall be installed vertically in the top of the tank and in accordance with the manufacturer's instructions. Switches shall be accessible for maintenance and calibration. In applications where switches cannot be directly mounted to a tank by the threaded or flanged connection, a mounting bracket shall be provided for connection to the inside tank wall. Sensor shall be positioned to maximize the return echo signal and minimize vessel obstructions in the sensors line of sight. The minimum recommended distance from the tank fill opening and from the side of the tank shall be maintained.

3.2.4 Pressure Instruments

Pressure sensors and pressure transducers shall be verified by calibration. All pressure taps shall incorporate appropriate snubbers. Pressure sensors and pressure switches shall have valves for isolation, venting, and taps for calibration. Pressure switches and pressure transducers installed on liquid or steam lines shall have drains. Pressure transducers, differential pressure sensors and differential pressure switches shall have nulling valves. Pressure switches shall be adjusted to the proper setpoint and shall be verified by calibration. Switch contact ratings and duty shall be selected for the application.

3.2.5 Instrument Shelters

Instrument shelters shall be installed in the location shown with the bottom 4.0 feet above the supporting surface using legs and secured rigidly to minimize vibrations from winds. Instrument shelters shall be oriented with door facing North. Instruments located in shelters shall be mounted in the 3-dimensional center of the open space of the shelter.

3.2.6 Output Devices

Output devices (transducers, relays, contactors, or other devices) which are not an integral part of the control panel, shall be mounted in an enclosure mounted adjacent to the control panel, unless otherwise shown. Where H-O-A and/or override switches on the drawings or required by the control sequence, the switches shall be installed so that the control system controls the function through the automatic position and other controls work through the hand position.

3.2.7 Enclosures

All enclosure penetrations shall be from the bottom of the enclosure, and shall be sealed to preclude entry of water using a silicone rubber sealant.

3.2.8 Transformers

Transformers for control voltages below 120 vAc shall be fed from the nearest power panel or motor control center, using circuits provided for the purpose. The Contractor shall provide a disconnect switch on the primary side and a fuse on the secondary side. Transformers shall be enclosed in a steel cabinet with conduit connections.

3.2.9 Radio Towers

The location shown for the radio towers is approximate. Determine exact location based on results of radio survey before installing each tower and its support base. Antennas shall be installed such that there is line-of-sight and no local obstructions between the master MTU antenna and each servant RTU antenna.

3.3 WIRE, CABLE AND CONNECTING HARDWARE

3.3.1 Metering and Sensor Wiring

Metering and sensor wiring shall be installed in accordance with the requirements of ANSI C12.1, NFPA 70, Section 16120, CONDUCTORS.

3.3.1.1 Power Line Surge Protection

Control panels shall be protected from power line surges. Protection shall meet the requirements of IEEE C62.41. Fuses shall not be used for surge protection.

3.3.1.2 Sensor and Control Wiring Surge Protection

Digital and analog inputs shall be protected against surges induced on control and sensor wiring. Digital and analog outputs shall be protected against surges induced on control and sensor wiring installed outdoors and as shown. Fuses shall not be used for surge protection. Surge protection devices located external of panels shall be housed in NEMA 4 enclosures. The inputs and outputs shall be tested in both the normal and common mode using the following two waveforms: The first waveform shall be 10 microseconds by 1000 microseconds with a peak voltage of 1500 volts and a peak current of 60 amperes. The second waveform shall be 8 microseconds by 20 microseconds with a peak voltage of 1000 volts and a peak current of 500 amperes.

3.3.1.3 Grounding

Each surge protection device located within a panel enclosure shall be grounded to the panel ground bus by means of a dedicated ground wire. The ground wire shall be not less than #10 AWG and shall be fastened to the ground bus with a bolted terminal lug. Each surge protection device located outside a building shall be grounded to the local ground rod by means of a #6 AWG bare solid copper ground. Each surge protection device located indoors but external of a panel shall be grounded to the nearest ground bus by means of a #6 AWG bare solid copper ground. Grounding to conduits is not acceptable.

3.4 APPLICATION SOFTWARE SUBMITTAL AND DESIGN WORKSHOPS

The applications software system supplier shall conduct several application software workshops at the Contracting Officer's facility during the project. The objective is to provide a means for the Contracting Officer and Contractor to review PLC, SCADA, and telemetry hardware, standard and application software submittals and for the Contracting Officer to oversee the development of all application software.

The applications software system supplier shall summarize resolutions reached in each workshop, including cost and schedule impacts and distribute copies to Contracting Officer and Contractor. The order and minimum topics to be covered in each Software Design Workshop shall include:

a. The Applications Software Design Workshop (kick off) shall establish project processes, including Application Software Supplier and Contractor organization and reporting procedures,

workshop objectives, submittal process, and shall review the work sequence and schedule.

b. During the Loop Specifications and P&ID Review Workshop, the application software supplier shall use the P&IDs and specifications to present how the proposed control system design and applications software will meet the functional requirements specified herein. At the completion of this workshop, the applications software supplier shall generate Loop Specifications. The applications software supplier shall submit finalized Loop Specifications along with an outline of any application software cost and schedule impacts.

c. During the PLC Software Standards Submittal Workshop, the PLC Software Standards shall be developed. The objective is to develop, implement, and review implementation of PLC Software Standards in ladder logic programming. Ladder diagram standards for commonly used functions shall be developed, including the following:

1. High and low process variable alarm checking.
2. Instrument failure alarm detection.
3. Equipment control.
4. On/Off pump control.
5. Start/Stop pump control.
6. Valve control.
7. Gate control.
8. Equipment failure detection.
9. Equipment run time.
10. Signal filtering.
11. Flow totalization.
12. Set point ramping.
13. Annunciator routine.
14. Interface with SCADA software.
15. Interface with spread spectrum radios including addressing, and polling.
16. Memory mapping, data transfer (read/write, remote setpoint adjustment, pump control and alarm management).

d. The application software supplier shall submit for review Ladder logic programming for each PLC including: descriptive ladder logic, cross- references, memory map and point databases.

e. The objective of the SCADA Software Standards Workshop is to develop, implement, and review implementation of SCADA software standards in an interactive workshop with the Contracting Officer. Design products and topics shall be finalized, including:

1. SCADA software integration.
2. Tag Group naming convention.
3. SCADA Software tag naming conventions.
4. Overview display design.
5. Process graphics.
6. Display paging and navigation.

7. Dynamic Objects: Pumps, valves, gates, compressors, etc.
8. Equipment control through pop up windows.
9. Loop control through pop up windows.
10. Display philosophy, organization and operation.
11. General data entry through the SCADA software.
12. Use of tool tips.
13. Color graphic standards, symbol standards, etc.
14. Dynamic Objects: Pumps, compressors, valves, gates, controller faceplates, process indicators, indicators with alarms, data entry, controller face plate, samplers, aerator, chemical feed pump, mixers.
15. Security.
16. Alarm Management: Operation of the alarms, alarm areas, alarm filtering.
17. Trending.
18. Historical data storage and retrieval.
19. Variable naming Conventions.
20. Scripting.
21. Tag Group file naming convention.
22. Display file naming convention.

f. As part of the SCADA software standards workshop, the minimum SCADA software design products and topics shall be finalized, which include:

1. Two (2) Overall Site Process Graphics.
2. Eight (2) Pump Station and Reservoir Process Graphics.
3. Sixteen (16) Pop-Up Equipment Operation Control Graphics.
4. One (1) Alarm Summary Process Control Graphic.
5. One (1) Alarm History Process Control Graphic.
6. One (1) Equipment Runtime Process Control Graphic.
7. One (1) Configurable Process Trend Control Graphic.
8. One (1) Analog Process Summary Control Graphic.
9. One (1) SCADA Telemetry Operation Control Graphic.

g. The Applications Software Supplier shall submit for review the SCADA software programming and development for each computer including: memory mapping, database structures, graphic displays, trends, and alarms.

h. The objective of the SCADA Process Reporting Workshop is to develop and document the number and types of reports. Each type of process report shall be identified and defined as described below. The Application Software Supplier shall submit for review the SCADA reports described below.

1. Daily Flow and energy totals
2. Weekly Flow and energy totals
3. Monthly flow and energy totals
4. Yearly flow and energy totals
5. Reservoir Min/Max Levels.
6. Process Equipment Runtime.

3.5 SOFTWARE INSTALLATION

The Contractor shall load software required for an operational control system, including databases (for points specified and shown), operational parameters, and system, command, and application programs. The Contractor shall adjust, tune, debug, and commission all software and parameters for controlled systems to assure proper operation in accordance with the sequences of operation and database tables.

3.6 FIELD TESTING AND ADJUSTING EQUIPMENT

The Contractor shall provide personnel, equipment, instrumentation, and supplies necessary to perform site testing. The Government will witness the PVT, and written permission shall be obtained from the Government before proceeding with the testing. Original copies of data produced, including results of each test procedure, during PVT shall be turned over to the Government at the conclusion of each phase of testing prior to Government approval of the test. The test procedures shall cover actual equipment and functions specified for the project.

3.6.1 Testing, Adjusting and Commissioning

After successful completion of the factory test as specified, the Contractor will be authorized to proceed with the installation of the system equipment, hardware, and software. Once the installation has been completed, the Contractor shall test, adjust, and commission each control loop and system in accordance with NIST SP 250 and shall verify proper operation of each item in the sequences of operation, including hardware and software. The Contractor shall calibrate field equipment, including control devices, adjust control parameters and logic (virtual) points including control loop setpoints, gain constants, constraints, and verify data communications before the system is placed online. Testing of Ground Rods installed by the Contractor shall be as specified in IEEE Std 142. The Contractor shall calibrate each instrumentation device connected to the control system control network by making a comparison between the reading at the device and the display at the workstation, using a standard at least twice as accurate as the device to be calibrated. The Contractor shall check each control point within the control system control network by making a comparison between the control command at the central station and field-controlled device. The Contractor shall deliver trend logs/graphs of all points showing to the Government that stable control has been achieved. Points on common systems shall be trended simultaneously. One log shall be provided showing concurrent samples taken once a minute for a total of 4 hours. The Contractor shall verify operation of systems in the specified failure modes upon Control system network failure or loss of power, and verify that systems return to control system control automatically upon a resumption of control system network operation or return of power. The Contractor shall deliver a report describing results of functional tests, diagnostics, calibrations and commissioning procedures including written certification to the Government that the installed complete system has been calibrated, tested, adjusted and commissioned and is ready to begin the PVT. The report shall also include a copy of the approved PVT procedure.

3.6.2 Performance Verification Test (PVT)

The Contractor shall prepare test procedures for the PVT. The test procedure shall describe all tests to be performed and other pertinent information such as specialized test equipment required and the length of the PVT. The test procedures shall explain, in detail, step-by-step actions and the expected results, to demonstrate compliance with all the requirements of the drawings and this specification. The test procedure shall be site specific and based on the inputs and outputs, required calculated points and the sequence of control. The Contractor shall demonstrate that the completed Control system complies with the contract requirements. All physical and functional requirements of the project including communication requirements shall be demonstrated and shown. The Contractor shall demonstrate that each system operates as required in the sequence of operation. The PVT as specified shall not be started until after receipt by the Contractor of written permission by the Government, based on the Contractor's written report including certification of successful completion of testing, adjusting and commissioning as specified, and upon successful completion of training as specified. Upon successful completion of the PVT, the Contractor shall deliver test reports and other documentation as specified to the Government.

3.6.3 Endurance Test

The Contractor shall use the endurance test to demonstrate the overall system reliability of the completed system. The endurance test shall be conducted in phases. The endurance test shall not be started until the Government notifies the Contractor in writing that the PVT is satisfactorily completed, training as specified has been completed, outstanding deficiencies have been satisfactorily corrected, and that the Contractor has permission to start the endurance test. The Contractor shall provide an operator to man the system 8 hours per day during daytime operations, including weekends and holidays, during Phase I endurance testing, in addition to any Government personnel that may be made available. The Government may terminate testing at any time when the system fails to perform as specified. Upon termination of testing by the Government or by the Contractor, the Contractor shall commence an assessment period as described for Phase II. Upon successful completion of the endurance test, the Contractor shall deliver test reports and other documentation, as specified, to the Government prior to acceptance of the system.

3.6.3.1 Phase I (Testing)

The test shall be conducted 24 hours per day, 7 days per week, for 7 consecutive calendar days, including holidays, and the system shall operate as specified. The Contractor shall make no repairs during this phase of testing unless authorized by the Government in writing.

3.6.3.2 Phase II (Assessment)

After the conclusion of Phase I, the Contractor shall identify failures, determine causes of failures, repair failures, and deliver a written report to the Government. The report shall explain in detail the nature of each failure, corrective action taken, results of tests performed, and shall recommend the point at which testing should be resumed. After delivering

the written report, the Contractor shall convene a test review meeting at the job site to present the results and recommendations to the Government. The meeting shall not be scheduled earlier than 5 business days after receipt of the report by the Government. As a part of this test review meeting, the Contractor shall demonstrate that failures have been corrected by performing appropriate portions of the performance verification test. The Government reserves the right to cancel the test review meeting if no failures or deficiencies occur during the Phase I testing. If the Government chooses to do so, the Contractor will be notified in writing. Based on the Contractor's report and the test review meeting, the Government will determine if retesting is necessary and the restart point. The Government reserves the right to require that the Phase I test be totally or partially rerun. The Contractor shall not commence any required retesting until after receipt of written notification by the Government. After the conclusion of any retesting which the Government may require, the Phase II assessment shall be repeated as if Phase I had just been completed.

3.6.3.3 Exclusions

The Contractor will not be held responsible for failures resulting from the following: Outage of the main power supply in excess of the capability of any backup power source, provided that the automatic initiation of all backup sources was accomplished and that automatic shutdown and restart of the control system performed as specified. Failure of a Government furnished communications link, provided that the PLC automatically and correctly operates in the stand-alone mode as specified, and that the failure was not due to Contractor furnished equipment, installation, or software. Failure of existing Government owned equipment, provided that the failure was not due to Contractor furnished equipment, installation, or software.

3.7 MANUFACTURER'S FIELD SERVICES

The Contractor shall obtain the services of a manufacturer's representative experienced in the installation, adjustment, and operation of the equipment specified. The representative shall supervise the installing, adjusting, and testing of the equipment.

3.8 INSTRUMENTATION AND CONTROL SYSTEM

Control drawings, reproducible, with corresponding CADD files, shall be provided for equipment furnished and for interfaces to equipment at each respective equipment location. Condensed operating instructions explaining preventive maintenance procedures, methods of checking the system for normal safe operation and procedures for safely starting and stopping the system manually shall be prepared in typed form, reproducible, with corresponding word processor files and posted beside the diagrams. Diagrams and instructions shall be submitted prior to posting.

3.9 FIELD TRAINING

Field training oriented to the specific system shall be provided for designated personnel. A copy of the training manual for each trainee plus two additional copies shall be delivered to the Contracting Officer.

Manuals shall include an agenda, the defined objectives for each lesson, and a detailed description of the subject matter for each lesson. The Contractor shall furnish audiovisual equipment and other training supplies and materials. Copies of the audiovisuals shall be delivered with the printed training manuals. The Government reserves the right to videotape training sessions for later use. A training day is defined as 8 hours of classroom instruction, excluding lunchtime, Monday through Friday, during the daytime shift in effect at the training facility. Approval of the Contractor's training schedule shall be obtained from the Government at least 30 days before the training.

3.9.1 Preliminary Operator Training

Prior to the start of field testing, preliminary operator training shall be taught at the project site for 1 training day. Upon completion of this course, each student, using appropriate documentation, should be able to perform elementary operations with guidance and describe the general hardware architecture and functionality of the system. This course shall include: general system architecture; functional operation of the system, including workstations; operator commands; application programs, control sequences, and control loops; database entry and modification; reports generation; alarm reporting; diagnostics; and historical files.

3.9.2 Additional Operator Training

Following the field testing, additional classroom training for operators shall be taught for 1 training day; individual instruction sessions of 4-hour periods in the morning (or afternoon) of the same weekday and an additional 1 day classroom session for answering operator questions. Individual instruction shall consist of "hands-on" training under the constant monitoring of the instructor. Classroom training shall include instruction on the specific hardware configuration of the installed control system and specific instructions for operating the installed system. The Contractor shall schedule activities during this period so that the specified amount of time on the equipment will be available for each student. The final session will address specific topics that the students need to discuss and to answer questions concerning the operation of the system. Upon completion of the course, the students should be fully proficient in system operation and have no unanswered questions regarding operation of the installed control system. Each student should be able to start the system, operate the system, recover the system after a failure and describe the specific hardware architecture and operation of the system and be fully proficient in all system operations. The Contractor shall report the skill level of each student at the end of this course.

3.9.3 Maintenance Training

Following the endurance test, a minimum period of one training day shall be provided by a factory representative or a qualified Contractor trainer for ten designated personnel on maintenance of the equipment. The training shall include: physical layout of each piece of hardware, calibration procedures, preventive maintenance procedures, schedules, troubleshooting, diagnostic procedures and repair instructions.

3.9.4 Specialized Training

Following the maintenance training, a minimum period of one, total training day(s) shall be provided by a factory representative or a qualified Contractor trainer for ten people on the input devices.

3.9.4.1 Flow Meter Training

Each type of flow meter, to include calibration, maintenance and testing of flow elements and transducers.

-- End of Section --

SECTION TABLE OF CONTENTS

DIVISION 15 - MECHANICAL

SECTION 15050

BASIC MECHANICAL MATERIALS AND METHODS

PART 1 GENERAL

1.1 REFERENCES
1.2 RELATED REQUIREMENTS
1.3 QUALITY ASSURANCE
1.3.1 Material and Equipment Qualifications
1.3.2 Alternative Qualifications
1.3.3 Service Support
1.3.4 Manufacturer's Nameplate
1.3.5 Modification of References
1.3.5.1 Definitions
1.3.5.2 Administrative Interpretations
1.4 DELIVERY, STORAGE, AND HANDLING
1.5 ELECTRICAL INSTALLATION REQUIREMENTS
1.5.1 New Work
1.5.2 Modifications to Existing Systems
1.5.3 High Efficiency Motors
1.5.3.1 High Efficiency Single-Phase Motors
1.5.3.2 High Efficiency Polyphase Motors
1.5.4 Three-Phase Motor Protection
1.6 INSTRUCTION TO GOVERNMENT PERSONNEL
1.7 ACCESSIBILITY

PART 2 PRODUCTS (Not used)

PART 3 EXECUTION

3.1 PAINTING OF NEW EQUIPMENT
3.1.1 Factory Painting Systems
3.1.2 Shop Painting Systems for Metal Surfaces

-- End of Section Table of Contents --

SECTION 15050

BASIC MECHANICAL MATERIALS AND METHODS

PART 1 GENERAL

1.1 REFERENCES

The publications listed below form a part of this specification to the extent referenced. The publications are referred to in the text by the basic designation only.

ASTM INTERNATIONAL (ASTM)

ASTM B 117	(1997) Operating Salt Spray (Fog) Apparatus

INSTITUTE OF ELECTRICAL AND ELECTRONICS ENGINEERS (IEEE)

IEEE C2	(2002) National Electrical Safety Code

NATIONAL ELECTRICAL MANUFACTURERS ASSOCIATION (NEMA)

NEMA MG 1	(1998) Motors and Generators
NEMA MG 10	(2001) Energy Management Guide for Selection and Use of Polyphase Motors
NEMA MG 11	(1977; R 1992) Energy Management Guide of Selection and Use of Single Phase Motors

NATIONAL FIRE PROTECTION ASSOCIATION (NFPA)

NFPA 70	(2002) National Electrical Code

1.2 RELATED REQUIREMENTS

This section applies to all sections of Division 15, "Mechanical" and Division 11 "Equipment" of this project specification, unless specified otherwise in the individual section.

1.3 QUALITY ASSURANCE

1.3.1 Material and Equipment Qualifications

Provide materials and equipment that are standard products of manufacturers regularly engaged in the manufacture of such products, which are of a similar material, design and workmanship. Standard products shall have been in satisfactory commercial or industrial use for 2 years prior to bid opening. The 2-year use shall include applications of equipment and materials under similar circumstances and of similar size. The product

shall have been for sale on the commercial market through advertisements, manufacturers' catalogs, or brochures during the 2 year period.

1.3.2 Alternative Qualifications

Products having less than a two-year field service record will be acceptable if a certified record of satisfactory field operation for not less than 6000 hours, exclusive of the manufacturer's factory or laboratory tests, can be shown.

1.3.3 Service Support

The equipment items shall be supported by service organizations. Submit a certified list of qualified permanent service organizations for support of the equipment which includes their addresses and qualifications. These service organizations shall be reasonably convenient to the equipment installation and able to render satisfactory service to the equipment on a regular and emergency basis during the warranty period of the contract.

1.3.4 Manufacturer's Nameplate

Each item of equipment shall have a nameplate bearing the manufacturer's name, address, model number, and serial number securely affixed in a conspicuous place; the nameplate of the distributing agent will not be acceptable.

1.3.5 Modification of References

In each of the publications referred to herein, consider the advisory provisions to be mandatory, as though the word, "shall" had been substituted for "should" wherever it appears. Interpret references in these publications to the "authority having jurisdiction", or words of similar meaning, to mean the Contracting Officer.

1.3.5.1 Definitions

For the International Code Council (ICC) Codes referenced in the contract documents, advisory provisions shall be considered mandatory, the word "should" shall be interpreted as "shall." Reference to the "code official" shall be interpreted to mean the "Contracting Officer." For leased facilities, references to the "owner" shall be interpreted to mean the "Contracting Officer." References to the "permit holder" shall be interpreted to mean the "Contractor."

1.3.5.2 Administrative Interpretations

For ICC Codes referenced in the contract documents, the provisions of Chapter 1, "Administrator," do not apply. These administrative requirements are covered by the applicable Federal Acquisition Regulations (FAR) included in this contract and by the authority granted to the Officer in Charge of Construction to administer the construction of this project. References in the ICC Codes to sections of Chapter 1, shall be applied appropriately by the Contracting Officer as authorized by his administrative cognizance and the FAR.

1.4 DELIVERY, STORAGE, AND HANDLING

Handle, store, and protect equipment and materials to prevent damage before and during installation in accordance with the manufacturer's recommendations, and as approved by the Contracting Officer. Replace damaged or defective items.

1.5 ELECTRICAL INSTALLATION REQUIREMENTS

Electrical installations shall conform to IEEE C2, NFPA 70, and requirements specified herein.

1.5.1 New Work

Provide electrical components of mechanical equipment, such as motors, motor starters (except starters/controllers which are indicated as part of a motor control center), control or push-button stations, float or pressure switches, solenoid valves, integral disconnects, and other devices functioning to control mechanical equipment, as well as control wiring and conduit for circuits rated 100 volts or less, to conform with the requirements of the section covering the mechanical equipment. Extended voltage range motors shall not be permitted. The interconnecting power wiring and conduit, control wiring rated 120 volts (nominal) and conduit, the motor control equipment forming a part of motor control centers, and the electrical power circuits shall be provided under Division 16, except internal wiring for components of package equipment shall be provided as an integral part of the equipment. When motors and equipment furnished are larger than sizes indicated, provide any required changes to the electrical service as may be necessary and related work as a part of the work for the section specifying that motor or equipment.

1.5.2 Modifications to Existing Systems

Where existing mechanical systems and motor-operated equipment require modifications, provide electrical components under Division 16.

1.5.3 High Efficiency Motors

1.5.3.1 High Efficiency Single-Phase Motors

Unless otherwise specified, single-phase fractional-horsepower alternating-current motors shall be high efficiency types corresponding to the applications listed in NEMA MG 11.

1.5.3.2 High Efficiency Polyphase Motors

Unless otherwise specified, polyphase motors shall be selected based on high efficiency characteristics relative to the applications as listed in NEMA MG 10. Additionally, polyphase squirrel-cage medium induction motors with continuous ratings shall meet or exceed energy efficient ratings in accordance with Table 12-11 of NEMA MG 1.

1.5.4 Three-Phase Motor Protection

Provide controllers for motors rated one one horsepower and larger with electronic phase-voltage monitors designed to protect motors from phase-loss, undervoltage, and overvoltage. Provide protection for motors from immediate restart by a time adjustable restart relay.

1.6 INSTRUCTION TO GOVERNMENT PERSONNEL

When specified in other sections, furnish the services of competent instructors to give full instruction to the designated Government personnel in the adjustment, operation, and maintenance, including pertinent safety requirements, of the specified equipment or system. Instructors shall be thoroughly familiar with all parts of the installation and shall be trained in operating theory as well as practical operation and maintenance work.

Instruction shall be given during the first regular work week after the equipment or system has been accepted and turned over to the Government for regular operation. The number of man-days (8 hours per day) of instruction furnished shall be as specified in the individual section. When more than 4 man-days of instruction are specified, use approximately half of the time for classroom instruction. Use other time for instruction with the equipment or system.

When significant changes or modifications in the equipment or system are made under the terms of the contract, provide additional instruction to acquaint the operating personnel with the changes or modifications.

1.7 ACCESSIBILITY

Install all work so that parts requiring periodic inspection, operation, maintenance, and repair are readily accessible. Install concealed valves, expansion joints, controls, dampers, and equipment requiring access, in locations freely accessible through access doors.

PART 2 PRODUCTS (Not used)

PART 3 EXECUTION

3.1 PAINTING OF NEW EQUIPMENT

New equipment painting shall be factory applied or shop applied, and shall be as specified herein, and provided under each individual section.

3.1.1 Factory Painting Systems

Manufacturer's standard factory painting systems may be provided subject to certification that the factory painting system applied will withstand 125 hours in a salt-spray fog test, except that equipment located outdoors shall withstand 500 hours in a salt-spray fog test. Salt-spray fog test shall be in accordance with ASTM B 117, and for that test the acceptance criteria shall be as follows: immediately after completion of the test, the paint shall show no signs of blistering, wrinkling, or cracking, and no loss of adhesion; and the specimen shall show no signs of rust creepage beyond 0.125 inch on either side of the scratch mark.

The film thickness of the factory painting system applied on the equipment shall not be less than the film thickness used on the test specimen. If manufacturer's standard factory painting system is being proposed for use on surfaces subject to temperatures above 120 degrees F, the factory painting system shall be designed for the temperature service.

3.1.2 Shop Painting Systems for Metal Surfaces

Clean, pretreat, prime and paint metal surfaces; except aluminum surfaces need not be painted. Apply coatings to clean dry surfaces. Clean the surfaces to remove dust, dirt, rust, oil and grease by wire brushing and solvent degreasing prior to application of paint, except metal surfaces subject to temperatures in excess of 120 degrees F shall be cleaned to bare metal.

Where more than one coat of paint is specified, apply the second coat after the preceding coat is thoroughly dry. Lightly sand damaged painting and retouch before applying the succeeding coat. Color of finish coat shall be aluminum or light gray.

a. Temperatures Less Than 120 Degrees F: Immediately after cleaning, the metal surfaces subject to temperatures less than 120 degrees F shall receive one coat of pretreatment primer applied to a minimum dry film thickness of 0.3 mil, one coat of primer applied to a minimum dry film thickness of one mil; and two coats of enamel applied to a minimum dry film thickness of one mil per coat.

b. Temperatures Between 120 and 400 Degrees F: Metal surfaces subject to temperatures between 120 and 400 degrees F shall receive two coats of 400 degrees F heat-resisting enamel applied to a total minimum thickness of 2 mils.

c. Temperatures Greater Than 400 Degrees F: Metal surfaces subject to temperatures greater than 400 degrees F shall receive two coats of 600 degrees F heat-resisting paint applied to a total minimum dry film thickness of 2 mils.

-- End of Section --

SECTION TABLE OF CONTENTS

DIVISION 15 - MECHANICAL

SECTION 15060

PIPING SUPPORT SYSTEMS

PART 1 GENERAL

1.1 REFERENCES
1.2 DEFINITIONS
1.3 SUBMITTALS
1.4 QUALIFICATIONS
1.5 DESIGN REQUIREMENTS
1.5.1 General
1.5.2 Piping Support System
1.5.2.1 Support Load
1.5.2.2 Maximum Support Spacing and Minimum Rod Size
1.5.3 Framing Support System
1.5.3.1 Beams
1.5.3.2 Column Members
1.5.3.3 Support Loads
1.5.3.4 Maximum Spans
1.5.3.5 Electrical Conduit Support
1.5.4 Anchoring Devices
1.5.5 Vertical Sway Bracing
1.5.6 Existing Support Systems

PART 2 PRODUCTS

2.1 GENERAL
2.2 SADDLE SUPPORTS
2.2.1 Pedestal Type
2.3 PIPE CLAMPS
2.4 CHANNEL TYPE SUPPORT SYSTEMS
2.4.1 Channel Size
2.4.2 Members and Connections
2.5 ACCESSORIES
2.5.1 Insulation Shields
2.5.2 Welding Insulation Saddles
2.5.3 Vibration Isolation Pads
2.6 INTERMEDIATE PIPE GUIDES
2.6.1 Piping 6 Inches and Smaller
2.6.2 Piping 8 Inches and Larger
2.6.2.1 Type
2.6.2.2 U-Bolt Stock Size
2.7 PIPE ALIGNMENT GUIDES
2.7.1 Type
2.8 PIPE ANCHORS
2.8.1 Type
2.9 ANCHORING SYSTEMS
2.9.1 Size

PART 3 EXECUTION

3.1 INSTALLATION
3.1.1 General
3.1.2 Standard Pipe Supports
3.1.2.1 Horizontal Piping Supported From Floors
3.1.2.2 Vertical Pipe
3.1.3 Intermediate and Pipe Alignment Guides
3.1.4 Accessories
3.1.4.1 Insulation Shield
3.1.4.2 Vibration Isolation Pad
3.1.4.3 Dielectric Barrier
3.1.4.4 Electrical Isolation
3.2 FIELD FINISHING

-- End of Section Table of Contents --

SECTION 15060

PIPING SUPPORT SYSTEMS

PART 1 GENERAL

1.1 REFERENCES

The publications listed below form a part of this specification to the extent referenced. The publications are referred to within the text by the basic designation only.

MANUFACTURERS STANDARDIZATION SOCIETY OF THE VALVE AND FITTINGS INDUSTRY (MSS)

MSS SP-58	(1993) Pipe Hangers and Supports - Materials, Design and Manufacture
MSS SP-69	(1996) Pipe Hangers and Supports - Selection and Application
MSS SP-89	(1998) Pipe Hangers and Supports - Fabrication and Installation Practices

1.2 DEFINITIONS

Wetted or Submerged: Submerged, less than 1 foot above liquid surface, below top of channel wall, under cover or slab of channel or tank, or in other damp locations.

1.3 SUBMITTALS

Government approval is required for submittals with a "G" designation; submittals not having a "G" designation are for information only or as otherwise designated. When used, a designation following the "G" designation identifies the office that will review the submittal for the Government. The following shall be submitted in accordance with Section 01330 SUBMITTAL PROCEDURES:

SD-02 Shop Drawings

Piping Support System; G, RE

SD-10 Operation and Maintenance Data

Piping Support System; G, RE.

Maintenance information on piping support system.

1.4 QUALIFICATIONS

Piping support systems shall be designed and shop drawings prepared and sealed by a registered Professional Engineer in the State of Arizona.

1.5 DESIGN REQUIREMENTS

1.5.1 General

a. Seismic Load: Seismic performance category forces with seismic loads in accordance with local codes.

b. Design, size, and locate piping support systems throughout facility, whether shown or not.

c. Piping Smaller than 30 Inches: Supports are shown only where specific types and locations are required; additional pipe supports may be required.

d. Meet requirements of MSS SP-58, MSS SP-69, and MSS SP-89, or as modified by this section.

1.5.2 Piping Support System

1.5.2.1 Support Load

Dead loads imposed by weight of pipes filled with water, except air and gas pipes, plus insulation.

1.5.2.2 Maximum Support Spacing and Minimum Rod Size

a. Ductile Iron Piping (Note that this spacing may require the use of higher load pipe clamps and more than a single point anchor point in concrete):

Pipe Size	Maximum Support Hanger Spacing	Minimum Rod Size/ Single Rod Hangers
1" & smaller	6 feet	1/4"
1-1/2" through 2-1/2"	8 feet	1/4"
3" & 4"	10 feet	3/8"
6"	12 feet	3/8"
8"	12 feet	1/2"
10" & 12"	14 feet	5/8"
14"	16 feet	3/4"
16" & 18"	16 feet	7/8"
20"	18 feet	1"
24"	18 feet	1-1/4"
30" & larger	As shown on drawings	As shown on drawings

b. Plastic Piping:

1. Maximum support spacing: As recommended by manufacturer for flow temperature in pipe.
2. Minimum Hanger Rod Sizing: Same as listed for steel pipe.

1.5.3 Framing Support System

1.5.3.1 Beams

Size such that beam stress does not exceed 25,000 psi and maximum deflection does not exceed 1/240 of span.

1.5.3.2 Column Members

Size in accordance with manufacturer's recommended method.

1.5.3.3 Support Loads

Calculate using weight of pipes filled with water.

1.5.3.4 Maximum Spans

a. Steel and Ductile Iron Pipe, 3 Inch Diameter and Larger: 10 foot centers, unless otherwise shown.

b. Other Pipelines and Special Situations: May require supplementary hangers and supports.

1.5.3.5 Electrical Conduit Support

Include in design of framing support system.

1.5.4 Anchoring Devices

Design, size, and space support anchoring devices, including anchor bolts, inserts, and other devices used to anchor support, to withstand shear and pullout loads imposed by loading and spacing on each particular support.

1.5.5 Vertical Sway Bracing

10-foot maximum centers, or as shown.

1.5.6 Existing Support Systems

Use existing supports systems to support new piping only if Contractor can show that they are adequate for additional load, or if they are strengthened to support additional load.

PART 2 PRODUCTS

2.1 GENERAL

a. When specified items are not available, fabricate pipe supports of correct material and to general configuration indicated by catalogs.

b. Special support and hanger details are shown for cases where standard catalog supports are inapplicable.

2.2 SADDLE SUPPORTS

2.2.1 Pedestal Type

Schedule 40 pipe stanchion, saddle, and anchoring flange.

a. Nonadjustable Saddle: MSS SP-58 and MSS SP-69, Type 37 with U-bolt.

b. Adjustable Saddle: MSS SP-58 and MSS SP-69, Type 38 without clamp.

2.3 PIPE CLAMPS

Riser Clamp: MSS SP-58 and MSS SP-69, Type 8.

2.4 CHANNEL TYPE SUPPORT SYSTEMS

2.4.1 Channel Size

12-gauge, 1-5/8 inch wide minimum steel, 1-1/2 inch wide, minimum FRP.

2.4.2 Members and Connections

Design for all loads with safety factor of 5.

2.5 ACCESSORIES

2.5.1 Insulation Shields

Type: Galvanized steel or stainless steel, MSS SP-58 and MSS SP-69, Type 40.

2.5.2 Welding Insulation Saddles

Type: MSS SP-58 and MSS SP-69, Type 39.

2.5.3 Vibration Isolation Pads

Type: Neoprene Waffle.

2.6 INTERMEDIATE PIPE GUIDES

2.6.1 Piping 6 Inches and Smaller

Type: Pipe clamp with oversized pipe sleeve to provide minimum 1/8 inch clearance.

2.6.2 Piping 8 Inches and Larger

2.6.2.1 Type

Specially formed U-bolts with double nuts to provide 1/4 inch minimum clearance around pipe.

2.6.2.2 U-Bolt Stock Size

a. 8 Inch Pipe: 5/8 inch.

b. 10 Inch Pipe: 3/4 inch.

c. 12 Through 16 Inch Pipe: 7/8 inch.

d. 18 Through 30 Inch Pipe: 1 inch.

2.7 PIPE ALIGNMENT GUIDES

2.7.1 Type

a. Piping 8 Inches and Smaller: Spider or sleeve type.

b. Piping 10 Inches and Larger: Roller type.

2.8 PIPE ANCHORS

2.8.1 Type

Anchor chair with U-bolt strap.

2.9 ANCHORING SYSTEMS

2.9.1 Size

Sized by equipment manufacturer.

PART 3 EXECUTION

3.1 INSTALLATION

3.1.1 General

a. Install support systems in accordance with MSS SP-69 and MSS SP-89, unless shown otherwise.

b. Support piping connections to equipment by pipe support and not by equipment.

c. Support large or heavy valves, fittings, and appurtenances independently of connected piping.

d. Support no pipe from pipe above it.

e. Support pipe at changes in direction or in elevation, adjacent to flexible joints and couplings, and where shown.

f. Do not install pipe supports in equipment access areas or bridge crane runs.

g. Install lateral supports for seismic loads at all changes in direction.

h. Install pipe anchors where required to withstand expansion thrust loads and to direct and control thermal expansion.

i. Repair mounting surfaces to original condition after attachments are made.

3.1.2 Standard Pipe Supports

3.1.2.1 Horizontal Piping Supported From Floors

a. Stanchion Type:

1. Pedestal type; adjustable with stanchion, saddle, and anchoring flange.
2. Use yoked saddles for piping whose centerline elevation is 18 inches or greater above floor and for exterior installations.
3. Provide neoprene waffle isolation pad under anchoring flanges, adjacent to equipment or where otherwise required to provide vibration isolation.

b. Floor Mounted Channel Supports:

1. Use for piping smaller than 3 inch nominal diameter running along floors and in trenches at piping elevations lower than can be accommodated using pedestal pipe supports.
2. Attach channel framing to floors with anchor bolts.
3. Attach pipe to channel with clips or pipe clamps.

c. Concrete Cradles: Use for piping larger than 3 inch along floor and in trenches at piping elevations lower than can be accommodated using stanchion type.

3.1.2.2 Vertical Pipe

Support with wall brackets and base elbow or riser clamps on floor penetrations.

3.1.3 Intermediate and Pipe Alignment Guides

a. Provide pipe alignment guides (or pipe supports that provide same function) at expansion joints and loops.

b. Guide piping on each side of expansion joint or loop at 4 and 14 pipe diameters from each joint or loop.

c. Install intermediate guides on metal framing support systems not carrying pipe anchor or alignment guide.

3.1.4 Accessories

3.1.4.1 Insulation Shield

Install on insulated nonsteel piping. Oversize rollers and supports.

3.1.4.2 Vibration Isolation Pad

Install under base flange of pedestal type pipe supports adjacent to equipment, and where required to isolate vibration.

3.1.4.3 Dielectric Barrier

a. Install between carbon steel members and copper or stainless steel pipe.

b. Install between stainless steel supports and nonstainless steel ferrous metal piping.

3.1.4.4 Electrical Isolation

Install 1/4 inch by 3 inch neoprene rubber wrap between submerged metal pipe and oversized clamps.

3.2 FIELD FINISHING

Paint atmospheric exposed surfaces hot-dip galvanized steel components as specified in Section 09971 COATING OF EQUIPMENT.

-- End of Section --

SECTION TABLE OF CONTENTS

DIVISION 15 - MECHANICAL

SECTION 15955

PIPING LEAKAGE TESTING

PART 1 GENERAL

1.1 SUBMITTALS

PART 2 PRODUCTS (NOT APPLICABLE)

PART 3 EXECUTION

3.1 PREPARATION
3.2 HYDROSTATIC TEST FOR PRESSURE PIPING
3.2.1 Fluid
3.2.2 Exposed Piping
3.2.3 Buried Piping
3.3 HYDROSTATIC TEST FOR GRAVITY PIPING
3.3.1 Testing Equipment Accuracy
3.3.2 Maximum Allowable Leakage
3.3.3 Gravity Sanitary and Roof Drain Piping
3.3.4 Exfiltration Test
3.3.4.1 Hydrostatic Head
3.3.4.2 Length of Pipe Tested
3.3.5 Defective Piping Sections
3.4 FIELD QUALITY CONTROL
3.4.1 Test Report Documentation

-- End of Section Table of Contents --

SECTION 15955

PIPING LEAKAGE TESTING

PART 1 GENERAL

1.1 SUBMITTALS

Government approval is required for submittals with a "G" designation; submittals not having a "G" designation are for information only or as otherwise designated. When used, a designation following the "G" designation identifies the office that will review the submittal for the Government. The following shall be submitted in accordance with Section 01330 SUBMITTAL PROCEDURES:

SD-06 Test Reports

Testing Plan; G, RE

Submit prior to testing and include at least the information that follows:

Testing dates
Piping systems and section(s) to be tested
Test type
Method of isolation
Calculation of maximum allowable leakage for piping section(s) to be tested

SD-07 Certificates

Testing equipment; G, RE
Certified Test Report; G, RE

PART 2 PRODUCTS (NOT APPLICABLE)

PART 3 EXECUTION

3.1 PREPARATION

a. Contractor shall prepare and submit a Testing Plan to Contracting Officer for approval before conducting any testing. Contractor shall also provide all applicable certifications required of the Testing Equipment to be used.

b. Notify Contracting Officer in writing 5 days in advance of testing. Perform testing in presence of Contracting Officer.

c. Pressure Piping:

1. Install temporary thrust blocking or other restraint as necessary to protect adjacent piping or equipment and make taps in piping prior to testing.
2. Wait 5 days minimum after concrete thrust blocking is installed to perform pressure tests. If high-early strength cement is used for thrust blocking, wait may be reduced to 2 days.
3. Prior to test, remove or suitably isolate appurtenant instruments or devices that could be damaged by pressure testing.
4. New Piping Connected to Existing Piping:
   (a) Isolate new piping with grooved-end pipe caps, spectacle blinds, blind flanges, or as acceptable to Contracting Officer.
5. Items that do not require testing include: Piping between wetwells and wetwell isolation valves, Equipment seal drains.
6. Test Pressure: As specified by equipment manufacturer.

d. Test section may be filled with water and allowed to stand under low pressure prior to testing.

e. Gravity Piping:

1. Perform testing after service connections, manholes, and backfilling have been completed between stations to be tested.
2. Determine groundwater level at time of testing by exploratory holes or other method acceptable to Contracting Officer.

3.2 HYDROSTATIC TEST FOR PRESSURE PIPING

3.2.1 Fluid

Clean water of such quality to prevent corrosion of materials in piping system.

3.2.2 Exposed Piping

a. Perform testing on installed piping prior to application of insulation.

b. Maximum Filling Velocity: 0.25 foot per second, applied over full area of pipe.

c. Vent piping during filling. Open vents at high points of piping system or loosen flanges, using at least four bolts, or use equipment vents to purge air pockets.

d. Maintain hydrostatic test pressure continuously for 60 minutes, minimum, and for such additional time as necessary to conduct examinations for leakage.

e. Examine joints and connections for leakage.

f. Correct visible leakage and retest as specified.

g. Leave pipe full of water after repair of leaks.

3.2.3 Buried Piping

a. Test after backfilling has been completed.

b. Expel air from piping system during filling.

c. Apply and maintain specified test pressure with hydraulic force pump. Valve off piping system when test pressure is reached.

d. Maintain hydrostatic test pressure continuously for 2 hours minimum, reopening isolation valve only as necessary to restore test pressure.

e. Determine actual leakage by measuring quantity of water necessary to maintain specified test pressure for duration of test.

f. Maximum Allowable Leakage:

$$L = \frac{SD(P)}{133,200}^{1/2}$$

where:

L = Allowable leakage, in gallons per hour.
S = Length of pipe tested, in feet.
D = Nominal diameter of pipe, in inches.
P = Test pressure during leakage test, in pounds per square inch.

g. Correct leakage greater than allowable, and retest as specified.

3.3 HYDROSTATIC TEST FOR GRAVITY PIPING

3.3.1 Testing Equipment Accuracy

Plus or minus 1/2 gallon of water leakage under specified conditions.

3.3.2 Maximum Allowable Leakage

0.16 gallons per hour per inch diameter per 100 feet. Include service connection footage in test section, subjected to minimum head specified.

3.3.3 Gravity Sanitary and Roof Drain Piping

Test with 15 feet of water to include highest horizontal vent in filled piping. Where vertical drain and vent systems exceed 15 feet in height, test systems in 15 foot vertical sections as piping is installed.

3.3.4 Exfiltration Test

3.3.4.1 Hydrostatic Head

a. At least 6 feet above maximum estimated groundwater level in section being tested.

b. No less than 6 feet above inside top of highest section of pipe in

test section, including service connections.

3.3.4.2 Length of Pipe Tested

Limit length such that pressure on invert of lower end of section does not exceed 30 feet of water column.

3.3.5 Defective Piping Sections

Replace, and retest as specified.

3.4 FIELD QUALITY CONTROL

3.4.1 Test Report Documentation

a. Test date.

b. Description and identification of piping tested.

c. Test fluid.

d. Test pressure.

e. Remarks, including:

1. Leaks (type, location).
2. Repair/replacement performed to remedy excessive leakage.

f. A Certified Test Report shall be signed by Contractor and Contracting Officer to represent that test has been satisfactorily completed.

-- End of Section --

SECTION TABLE OF CONTENTS

DIVISION 16 - ELECTRICAL

SECTION 16010

BASIC ELECTRICAL REQUIREMENTS

PART 1 GENERAL

1.1 REFERENCES
1.2 RELATED SECTIONS
1.3 DESIGN REQUIREMENTS
1.4 ELECTRICAL SCOPE OF WORK
1.5 ELECTRICAL UTILITIES

PART 2 PRODUCTS

2.1 GENERAL

PART 3 EXECUTION

3.1 GENERAL
3.2 LOAD BALANCE
3.3 CHECKOUT AND STARTUP
3.3.1 Voltage Field Test
3.3.2 Equipment Line Current Tests

-- End of Section Table of Contents --

SECTION 16010

BASIC ELECTRICAL REQUIREMENTS

PART 1 GENERAL

1.1 REFERENCES

The publications listed below form a part of this specification to the extent referenced. The publications are referred to within the text by the basic designation only.

NATIONAL FIRE PROTECTION ASSOCIATION (NFPA)

NFPA 70 (2002) National Electrical Code

1.2 RELATED SECTIONS

Requirements specified within this section apply to all sections in Division 16, ELECTRICAL. Work specified herein shall be performed as if specified in the individual sections.

1.3 DESIGN REQUIREMENTS

All equipment anchoring and mounting shall be in accordance with manufacturer's requirements for the seismic zone criteria given in the project area.

1.4 ELECTRICAL SCOPE OF WORK

a. Electrical work associated with the following:

1. Water Distribution Pumping Station (WDPS) No. 2 and 3.
2. Conduits for future for the following:
   a) Control wiring between Rio Salado Supply Well (RSSW) - 2 (existing), 3, 4, 5, 6, and Reservoirs 2 & 3.
   b) Electrical power supply and power distribution to the irrigation controllers at North and South overbank areas.

b. Minimum work consists of but is not restricted to the following activities:

1. Obtain all permits and pay all fees associated with the electrical work performed under this contract.
2. Provide conduits, wiring/cables, electrical equipment (including service entrance equipment per electrical utilities requirements, switchboards, transformers, electrical panels, lighting, and associated electrical works.
3. Power all vendor supplied panels, control panels, motors, and ancillary equipment.

4. Coordinate with local electrical Utilities and meet their requirements.
5. Provide complete grounding system for electrical installation.
6. Provide personnel and equipment to facilitate start-up and testing of all electrical work, and process equipment under this Contract.
7. After completion of all work, provide Contracting Officer with an O&M manual, which identifies electrical components installed under this Contract including: part number, catalog cut sheets and vendor names for future purchase of equipment. O&M manual shall also include "As-built" power and control Drawings which accurately show final electrical equipment layout, installation location, conduit routing, and operation schemes for all electrical equipment and maintenance procedures.

c. All electrical materials and equipment shall be UL, FM, or CSA approved for their respective installation prior to delivery to the construction site.

d. All work shall be accomplished in accordance with the latest requirements of NFPA 70, City of Phoenix, Arizona State, and local codes.

1.5 ELECTRICAL UTILITIES

a. Following electrical Utilities provide power in the project areas:

1. APS: Provides power to the North side of the Salt River.
Contact and Address: C.J. Powers
Electrical Engineer
Customer Construction Central
10001 N 23rd Ave., Bldg F-2
Phoenix, AZ 85021
Tel: 602-371-6972

2. SRP: Provides power to the South side of the Salt River.
Contact and Address: Cindy Scott
Project Leader
New Business/Commercial Design
& Construction
Mail Station Wv 208
P.O. Box 52025
Phoenix, AZ 85072-2025
Phone: (602) 236-0684

PART 2 PRODUCTS

2.1 GENERAL

a. Equipment Finish:

1. Provide manufacturers' standard finish and color, except where specific color is indicated.
2. If manufacturer has no standard color, provide equipment with

ANSI No. 61, light gray color.

PART 3 EXECUTION

3.1 GENERAL

a. Electrical Drawings show general locations of equipment, devices, and raceway, unless specifically dimensioned.

b. Install work in accordance with NECA Standards of Installation, unless otherwise specified.

3.2 LOAD BALANCE

a. Drawings and Specifications indicate circuiting to electrical loads and distribution equipment.

b. Balance electrical load between phases as nearly as possible on switchboards, panelboards, motor control centers, and other equipment where balancing is required.

c. When loads must be reconnected to different circuits to balance phase loads, maintain accurate record of changes made, and provide circuit directory that lists final circuit arrangement.

3.3 CHECKOUT AND STARTUP

3.3.1 Voltage Field Test

a. Check voltage at point of termination of power company supply system to project when installation is essentially complete and is in operation.

b. Check voltage amplitude and balance between phases for loaded and unloaded conditions.

c. Record supply voltage (all three phases simultaneously on same graph) for 24 hours during normal working day.

1. Submit Voltage Field Test Report within 5 days of test.

d. Unbalance Corrections:

1. Make written request to Contracting Officer to correct condition if balance (as defined by NEMA) exceeds 1 percent, or if voltage varies throughout the day and from loaded to unloaded condition more than plus or minus 4 percent of nominal.
2. Obtain a written certification from a responsible power company official that the voltage variations and unbalance are within their normal standards if corrections are not made.

3.3.2 Equipment Line Current Tests

a. Check line current in each phase for each piece of equipment.

b. Make line current check after power company has made final adjustments to supply voltage magnitude or balance.

c. If any phase current for any piece of equipment is above rated nameplate current, prepare Equipment Line Phase Current Report that identifies cause of problem and corrective action taken.

-- End of Section --

SECTION TABLE OF CONTENTS

DIVISION 16 - ELECTRICAL

SECTION 16050

BASIC ELECTRICAL MATERIALS AND METHODS

PART 1 GENERAL

1.1 REFERENCES
1.2 SUBMITTALS
1.3 QUALITY ASSURANCE
1.4 SPARE PARTS

PART 2 PRODUCTS

2.1 PRIMARY SERVICE EQUIPMENT
2.2 OUTLET AND DEVICE BOXES
2.2.1 Cast Metal
2.2.2 Nonmetallic
2.3 JUNCTION AND PULL BOXES
2.3.1 Outlet Boxes Used as Junction or Pull Box
2.3.2 Conduit Bodies Used as Junction Boxes
2.3.3 Large Steel Box
2.3.4 Large Nonmetallic Box
2.3.5 Concrete Box
2.4 WIRING DEVICES
2.4.1 Switches
2.4.2 Receptacle, Single and Duplex
2.4.3 Receptacle, Ground Fault Circuit Interrupter
2.5 DEVICE PLATES
2.5.1 General
2.5.2 Cast Metal
2.5.2.1 Material
2.5.2.2 Screw
2.5.3 Weatherproof
2.5.3.1 For Receptacles
2.5.3.2 For Switches
2.5.4 Raised Sheet Metal
2.5.5 Sheet Steel
2.6 LIGHTING AND POWER DISTRIBUTION PANELBOARD
2.6.1 Panelboards and Circuit Breakers
2.6.2 Short-Circuit Current Equipment Rating
2.6.3 Rating
2.6.4 Cabinet
2.6.5 Bus Bar
2.6.6 Circuit Breakers
2.7 MINI-POWER CENTER (MPC)
2.7.1 General
2.7.2 Transformer
2.7.3 Panelboard
2.8 NUMBER AND BREAKER AMPERE RATINGS

2.9 CIRCUIT BREAKER, INDIVIDUAL, 0 TO 600 VOLTS
2.10 PUSHBUTTON, INDICATING LIGHT, AND SELECTOR SWITCHES
2.10.1 Contact Rating
2.10.2 Selector Switch Operating Lever
2.10.3 Indicating Lights
2.10.4 Pushbutton Color
2.10.5 Pushbuttons and Selector Switches
2.10.6 Legend Plate
2.11 NONFUSED SWITCH, INDIVIDUAL, 0 TO 600 VOLTS
2.12 INTERLOCK
2.13 TERMINAL JUNCTION BOX
2.13.1 Cover
2.13.2 Interior Finish
2.13.3 Terminal Blocks
2.14 TERMINAL BLOCK (0 TO 600 VOLTS)
2.15 MAGNETIC CONTROL RELAY
2.16 ELAPSED TIME METER
2.16.1 Drive
2.16.2 Range
2.16.3 Mounting
2.17 DRY TYPE TRANSFORMER (0- TO 600-VOLT PRIMARY)
2.18 LOW VOLTAGE, SECONDARY SURGE PROTECTIVE EQUIPMENT
2.19 SUPPORT AND FRAMING CHANNELS
2.19.1 Carbon Steel Framing Channel
2.19.2 Paint Coated Framing Channel
2.19.3 PVC Coated Framing Channel
2.19.4 Stainless Steel Framing Channel
2.19.5 Extruded Aluminum Framing Channel
2.19.6 Nonmetallic Framing Channel
2.20 NAMEPLATES
2.20.1 Material
2.20.2 Attachment Screws
2.20.3 Color
2.20.4 Engraving
2.20.5 Letter Height

PART 3 EXECUTION

3.1 GENERAL
3.2 OUTLET AND DEVICE BOXES
3.3 JUNCTION AND PULL BOXES
3.4 WIRING DEVICES
3.4.1 Switches
3.4.2 Receptacles
3.4.2.1 Ground Fault Interrupter
3.4.2.2 Special-Purpose Receptacles
3.4.2.3 Weatherproof Receptacles
3.4.3 Switch, Motor Rated
3.5 DEVICE PLATES
3.5.1 Flush Mounted
3.5.2 Surface Mounted
3.5.3 Types (Unless Otherwise Shown)
3.6 PUSHBUTTON, INDICATING LIGHT, AND SELECTOR SWITCH
3.6.1 Heavy-Duty, Oiltight Type

3.6.2 Heavy-Duty, Watertight, and Corrosion-Resistant Type
3.7 TERMINAL JUNCTION BOX
3.8 LIGHTING AND POWER DISTRIBUTION PANELBOARD
3.9 CIRCUIT BREAKER, FUSED SWITCH, AND NONFUSED SWITCH ENCLOSURES
3.9.1 Location/Type
3.10 SUPPORT AND FRAMING CHANNEL
3.11 DRY TYPE TRANSFORMER (0- TO 600-VOLT PRIMARY)
3.12 MOTOR SURGE PROTECTION

-- End of Section Table of Contents --

SECTION 16050

BASIC ELECTRICAL MATERIALS AND METHODS

PART 1 GENERAL

1.1 REFERENCES

The publications listed below form a part of this specification to the extent referenced. The publications are referred to within the text by the basic designation only.

AMERICAN NATIONAL STANDARDS INSTITUTE (ANSI)

ANSI C62.11	(1999) Standard for Metal-Oxide Surge Arrestors for AC Circuits

ASTM INTERNATIONAL (ASTM)

ASTM A 167	(1999) Stainless and Heat-Resisting Chromium-Nickel Steel Plate, Sheet, and Strip
ASTM A 570/A 570M	(1998) Steel, Sheet, and Strip, Carbon, Hot-Rolled, Structural Quality

NATIONAL ELECTRICAL CONTRACTOR'S ASSOCIATION (NECA)

NECA 1	(2000) Standard of Installation

NATIONAL ELECTRICAL MANUFACTURERS ASSOCIATION (NEMA)

NEMA 250	(1997) Enclosures for Electrical Equipment (1000 Volts Maximum)
NEMA AB 1	(1999) Molded Case Circuit Breakers and Molded Case Switches
NEMA ICS 2	(2002) Industrial Control and Systems Controllers, Contactors, and Overload Relays Rated Not More Than 2,000 Volts AC or 750 Volts DC
NEMA KS 1	(2001) Enclosed and Miscellaneous Distribution Equipment Switches (600 Volts Maximum)
NEMA LA 1	(1992; R 1999) Surge Arrestors
NEMA PB 1	(2001) Panelboards

NEMA ST 20	(1992; R 1997) Dry-Type Transformers for General Applications
NEMA WD 1	(1999) General Requirements for Wiring Devices

NATIONAL FIRE PROTECTION ASSOCIATION (NFPA)

NFPA 70	(2002) National Electrical Code

UNDERWRITERS LABORATORIES (UL)

UL 67	(1993; Rev thru Jan 2000) Panelboards
UL 486E	(1994; Rev thru May 2000) Equipment Wiring Terminals for Use with Aluminum and/or Copper Conductors
UL 489	(1996; Rev thru Mar 2000) Molded-Case Circuit Breakers, Molded-Case Switches, and Circuit-Breaker Enclosures
UL 943	(1993; Rev thru Apr 2002) Ground-Fault Circuit-Interrupters
UL 1059	(2001; 4th Edition) Terminal Blocks
UL 1561	(1999; Rev Apr 2001) Dry-Type, General Purpose and Power Transformers

1.2 SUBMITTALS

Government approval is required for submittals with a "G" designation; submittals not having a "G" designation are for information only or as otherwise designated. When used, a designation following the "G" designation identifies the office that will review the submittal for the Government. The following shall be submitted in accordance with Section 01330 SUBMITTAL PROCEDURES:

SD-02 Shop Drawings

Outlet and Device boxes; G, RE
Junction and Pull Boxes; G, RE
Terminal Junction Box; G, RE
Lighting and Power Distribution Panel Board; G, RE
Mini-Power Center (MPC); G, RE
Circuit Breaker, Individual; G, RE
Wiring Devices; G, RE
Magnetic Control Relay; G, RE
Dry Type Transformer; G, RE

1.3 QUALITY ASSURANCE

UL Compliance: Materials manufactured within scope of Underwriters Laboratories shall conform to UL Standards and have an applied UL listing mark.

1.4 SPARE PARTS

Furnish, tag, and box for shipment and storage the following spare parts:

Fuses, 0 to 600 Volts: Six of each type and each current rating installed.

PART 2 PRODUCTS

2.1 PRIMARY SERVICE EQUIPMENT

Provide electric service in accordance with electrical utility requirements. Equipment shall include, but not be limited to:

a. Conduit riser.

b. Conduit, wire, and miscellaneous hardware.

2.2 OUTLET AND DEVICE BOXES

2.2.1 Cast Metal

a. Box: Malleable iron.

b. Cover: Gasketed, weatherproof, malleable iron, with stainless steel screws.

c. Hubs: Threaded.

d. Lugs: Cast Mounting.

2.2.2 Nonmetallic

a. Box: PVC.

b. Cover: PVC, weatherproof, with stainless steel screws.

2.3 JUNCTION AND PULL BOXES

2.3.1 Outlet Boxes Used as Junction or Pull Box

As specified under Article OUTLET AND DEVICE BOXES.

2.3.2 Conduit Bodies Used as Junction Boxes

As specified under Article FITTINGS in Section 16110 RACEWAYS.

2.3.3 Large Steel Box

a. NEMA 250, Type12.

b. Box: 14-gauge steel, with white enamel painted interior and gray primed exterior, over phosphated surfaces, with final, No. 61 gray enamel on exterior surfaces.

c. Cover: Hinged with clamps.

d. Hardware and Machine Screws: ASTM A 167, Type 316 stainless steel.

2.3.4 Large Nonmetallic Box

a. NEMA 250, Type 4X.

b. Box: High-impact, fiberglass-reinforced polyester or engineered thermoplastic, with stability to high heat.

c. Cover: Hinged with clamps.

d. Hardware and Machine Screws: ASTM A 167, Type 316 stainless steel.

e. Conduit hubs and mounting lugs.

2.3.5 Concrete Box

a. Box: Reinforced, cast concrete.
b. Cover: Cast iron. Provide steel traffic rated cover in traffic areas.
c. Cover Marking: ELECTRICAL, SIGNAL, or as shown.

2.4 WIRING DEVICES

2.4.1 Switches

a. NEMA WD 1.

b. Specification grade, totally enclosed, AC type, with quiet tumbler switches and screw terminals.

c. Capable of controlling 100 percent tungsten filament and fluorescent lamp loads.

d. Rating: 20 amps, 120/277 volts.

e. Color:

1. Office Areas: Ivory.
2. Other Areas: Brown.

f. Integral grounding terminal on mounting strap.

2.4.2 Receptacle, Single and Duplex

a. NEMA WD 1.

b. Specification grade, two-pole, three-wire grounding type with screw type wire terminals suitable for No. 10 AWG.

c. High strength, thermoplastic base color.

d. Color:

1. Restroom Areas: Ivory.
2. Other Areas: Brown.

e. Contact Arrangement: Contact to be made on two sides of each inserted blade without detent.

f. Rating: 125 volts, NEMA WD 1, Configuration 5-20R, 20 amps.

g. One-piece mounting strap with integral ground contact.

2.4.3 Receptacle, Ground Fault Circuit Interrupter

a. Duplex, specification grade, tripping at 5 mA.

b. Color: Brown.

c. Rating: 125 volts, NEMA WD 1, Configuration 5-20R, 20 amps.

d. Size: For 2 inch by 4 inch outlet boxes.

e. Standard Model: NEMA WD 1, with screw terminals and provisions for testing.

f. Feed-Through Model: NEMA WD 1, with feed-through screw terminals and provisions for testing.

2.5 DEVICE PLATES

2.5.1 General

Sectional type plates not permitted.

2.5.2 Cast Metal

2.5.2.1 Material

Malleable ferrous metal, with gaskets.

2.5.2.2 Screw

2.5.3 Weatherproof

2.5.3.1 For Receptacles

a. Gasketed, cast-aluminum, with individual cap over each receptacle opening.

b. Mounting Screw and Cap Spring: Stainless steel.

2.5.3.2 For Switches

a. Gasketed, cast-metal or -aluminum, incorporating external operator for internal switch.

b. Mounting Screw: Stainless steel.

2.5.4 Raised Sheet Metal

1/2 inch high zinc- or cadmium-plated steel designed for one-piece drawn type sheet steel boxes.

2.5.5 Sheet Steel

Formed sheet steel or Feraloy designed for installation on cast metal boxes.

2.6 LIGHTING AND POWER DISTRIBUTION PANELBOARD

NEMA PB 1, NFPA 70, and UL 67.

2.6.1 Panelboards and Circuit Breakers

Suitable for use with 75 degrees C wire at full NFPA 70, 75 degrees C ampacity.

2.6.2 Short-Circuit Current Equipment Rating

Fully rated; series connected unacceptable.

2.6.3 Rating

Applicable to a system with available short-circuit current of the indicated amperes rms symmetrical at volts as shown.

2.6.4 Cabinet

a. NEMA 250, Type 12 or 3R, as shown.

b. Material: Code-gauge, hot-dip galvanized sheet steel, with reinforced steel frame.

c. Wiring Gutter: Minimum 4 inch square; both sides, top and bottom.

d. Front: Fastened with adjustable clamps.

1. Trim Size:
   a) Surface Mounted: Same as box.
   b) Flush Mounted: 3/4 inch larger than box on all sides.
2. Finish: Rust inhibitor prime, with manufacturer's standard baked enamel or lacquer.

e. Interior:

1. Factory assembled; complete with circuit breakers.
2. Capable of circuit breaker replacement without disturbing adjacent circuit breakers or without removing main bus.
3. Spaces: Cover openings with easily removable metal cover.

f. Door Hinges: Concealed.

g. Locking Device:

1. Flush type.
2. Doors Over 30 Inches in Height: Multipoint.
3. Identical keylocks, with two milled keys each lock.

h. Circuit Directory: Metal frame with transparent plastic face and enclosed card on interior of door.

2.6.5 Bus Bar

a. Material: Copper full sized throughout length.

b. Provide for mounting of future circuit breakers along full length of bus regardless of number of units and spaces shown. Machine, drill, and tap as required for current and future positions.

c. Neutral: Insulated, rated same as phase bus bars with at least one terminal screw for each branch circuit.

d. Ground: Copper, installed on panelboard frame, bonded to box with at least one terminal screw for each circuit.

e. Lugs and Connection Points:

1. Suitable for either copper or aluminum conductors.
2. Solderless main lugs for main, neutral, and ground bus bars.
3. Subfeed or through-feed lugs as shown.

f. Bolt together and rigidly support bus bars and connection straps on molded insulators.

2.6.6 Circuit Breakers

a. NEMA AB 1 and UL 489.

b. Thermal-magnetic, quick-make, quick-break, molded case, of indicating type showing ON/OFF and TRIPPED positions of operating handle.

c. Noninterchangeable, in accordance with NFPA 70.

d. Locking: Provisions for handle padlocking, unless otherwise shown.

e. Type: Bolt-on circuit breakers in all panelboards.

f. Multi-pole circuit breakers designed to automatically open all poles when an overload occurs on one pole.

g. Do not substitute single-pole circuit breakers with handle ties for multi-pole breakers.

h. Do not use tandem or dual circuit breakers in normal single-pole spaces.

i. Ground Fault Interrupter:

1. Equip with conventional thermal-magnetic trip and ground fault sensor rated to trip in 0.025 second for a 30 mA ground fault (UL 943, Class B sensitivity).
2. Sensor with same rating as circuit breaker and a push-to-test button.

2.7 MINI-POWER CENTER (MPC)

2.7.1 General

Transformer, primary and secondary main circuit breakers, and secondary panelboard section enclosed in NEMA 250, Type 3R enclosure.

2.7.2 Transformer

a. Type: Dry, self-cooled, encapsulated.

b. Insulation: Manufacturer's standard, with UL 1561 temperature rise.

c. Full capacity, 2-1/2 percent voltage taps, two above and two below normal voltage.

d. Primary Voltage: 480, single three-phase, as shown.

e. Secondary Voltage: 208/120 volts, single or three-phase, four-wire, as shown.

2.7.3 Panelboard

Full, UL 489, short-circuit current rated.

Type: Thermal-magnetic, quick-make, quick-break, indicating, with noninterchangeable molded case circuit breakers.

2.8 NUMBER AND BREAKER AMPERE RATINGS

Refer to Panel Schedule

2.9 CIRCUIT BREAKER, INDIVIDUAL, 0 TO 600 VOLTS

a. NEMA AB 1, UL 489 listed for use at location of installation.

b. Minimum Interrupt Rating: As indicated.

c. Thermal-magnetic, quick-make, quick-break, indicating type, showing ON/OFF and TRIPPED indicating positions of operating handle.

d. Suitable for use with 75 degrees C wire at full NFPA 70, 75 degrees C ampacity.

e. Locking: Provisions for padlocking handle.

f. Multi-pole breakers to automatically open all poles when an overload occurs on one pole.

g. Enclosure: NEMA 250, Type as indicated in Part 3 of this Specification unless otherwise shown.

h. Interlock: Enclosure and switch shall interlock to prevent opening cover with switch in the ON position.

i. Do not provide single-pole circuit breakers with handle ties where multi-pole circuit breakers are shown.

2.10 PUSHBUTTON, INDICATING LIGHT, AND SELECTOR SWITCHES

2.10.1 Contact Rating

NEMA ICS 2, Type A600.

2.10.2 Selector Switch Operating Lever

Standard.

2.10.3 Indicating Lights

Push-to-test, transformer-type.

2.10.4 Pushbutton Color

a. ON or START: Black.

b. OFF or STOP: Red.

2.10.5 Pushbuttons and Selector Switches

Lockable in OFF position where indicated.

2.10.6 Legend Plate

a. Material: Aluminum.

b. Engraving: 11 character/spaces on one line, 14 character/spaces on each of two lines, as required, indicating specific function.

c. Letter Height: 7/64 inch.

2.11 NONFUSED SWITCH, INDIVIDUAL, 0 TO 600 VOLTS

a. NEMA KS 1.

b. Quick-make, quick-break, motor rated, load-break, heavy-duty (HD) type with external markings clearly indicating ON/OFF positions.

c. Suitable for use with 75 degrees C wire at full NFPA 70, 75 degrees C ampacity.

d. Enclosure: NEMA 250, Type as indicated in Part 3 of this Specification unless otherwise shown.

2.12 INTERLOCK

Enclosure and switch to prevent opening cover with switch in the ON position.

2.13 TERMINAL JUNCTION BOX

2.13.1 Cover

Hinged, unless otherwise shown.

2.13.2 Interior Finish

Paint with white enamel or lacquer.

2.13.3 Terminal Blocks

a. Separate connection point for each conductor entering or leaving box.

b. Spare Terminal Points: 25 percent.

2.14 TERMINAL BLOCK (0 TO 600 VOLTS)

a. UL 486E and UL 1059.

b. Size components to allow insertion of necessary wire sizes.

c. Capable of termination of control circuits entering or leaving equipment, panels, or boxes.

d. Screw clamp compression, dead front barrier type, with current bar providing direct contact with wire between compression screw and yoke.

e. Yoke, current bar, and clamping screw of high strength and high conductivity metal.

f. Yoke shall guide all strands of wire into terminal.

g. Current bar shall ensure vibration-proof connection.

h. Terminals:

1. Capable of wire connections without special preparation other than stripping.
2. Capable of jumper installation with no loss of terminal or rail space.
3. Individual, rail mounted.

i. Marking system, allowing use of preprinted or field-marked tags.

2.15 MAGNETIC CONTROL RELAY

a. NEMA ICS 2, Class A600 (600 volts, 10 amps continuous, 7,200VA make, 720VA break), industrial control with field convertible contacts.

b. Time Delay Relay Attachment:

1. Pneumatic or electronic type, timer adjustable from 0.2 to 60 seconds (minimum).
2. Field convertible from ON delay to OFF delay and vice versa.

c. Latching Attachment: Mechanical latch having unlatching coil and coil clearing contacts.

2.16 ELAPSED TIME METER

2.16.1 Drive

Synchronous motor.

2.16.2 Range

0 to 99,999.9 hours, nonreset type.

2.16.3 Mounting

Semiflush, panel.

2.17 DRY TYPE TRANSFORMER (0- TO 600-VOLT PRIMARY)

a. UL 1561, NEMA ST 20, unless otherwise indicated.

b. Self-cooled, two-winding.

c. Insulation Class and Temperature Rise: Manufacturer's standard.

d. Core and Coil:

1. Encapsulated for single-phase units 1/2 to 25 kVA and for three-phase units 3 to 15 kVA.
2. Thermosetting varnish impregnated for single-phase units 37.5

kVA and above, and for three-phase units 30 kVA and above.

e. Units larger than 5 kVA suitable for use with 75 degrees C wire at full NFPA 70, 75 degrees C ampacity.

f. Enclosure:

1. Single-Phase, 3 to 25 kVA: NEMA 250, Type 3R, nonventilated.
2. Single-Phase, 37-1/2 kVA and Above: NEMA 250, Type 2, ventilated.
3. Three-Phase, 3 to 15 kVA: NEMA 250, Type 3R, nonventilated.
4. Three-Phase, 30 kVA and Above: NEMA 250, Type 2, ventilated.
5. Outdoor Transformers: NEMA 250, Type 3R.

g. Wall Bracket: For single-phase units, 15 to 37-1/2 kVA, and for three-phase units, 15 to 30 kVA.

h. Voltage Taps:

1. Single-Phase, 3 to 10 kVA: Four 2-1/2 percent, full capacity; two above and two below normal voltage rating.
2. Single-Phase, 15 kVA and Above: Four 2-1/2 percent, full capacity; two above and two below normal voltage rating.
3. Three-Phase, 3 to 15 kVA: Four 2-1/2 percent, full capacity; two above and two below normal voltage rating.
4. Three-Phase, 30 kVA and Above: Four 2-1/2 percent, full capacity; two above and two below normal voltage rating.

i. Impedance: 4.5 percent minimum on units 75 kVA and larger.

j. Maximum Sound Level: NEMA ST 20:

1. 40 decibels for 0 to 9 kVA.
2. 45 decibels for 10 to 50 kVA.
3. 50 decibels for 51 to 150 kVA.
4. 55 decibels for 151 to 300 kVA.
5. 60 decibels for 301 to 500 kVA.

k. Vibration Isolators:

1. Rated for transformer's weight.
2. Isolation Efficiency: 99 percent, at fundamental frequency of sound emitted by transformer.
3. Less Than 30 kVA: Isolate entire unit from structure with external vibration isolators.
4. 30 kVA and Above: Isolate core and coil assembly from transformer enclosure with integral vibration isolator.

2.18 LOW VOLTAGE, SECONDARY SURGE PROTECTIVE EQUIPMENT

a. NEMA LA 1, ANSI C62.11.

b. Surge Capacitor:

1. Impregnated with nonPCB, biodegradable dielectric fluid.
2. Integral discharge resistor which will drain residual voltage to 50-volts crest in less than 1 minute after disconnection from circuit.

c. Arrestor: High strength metal oxide valve elements enclosed in high strength, corrosion-resistant, molded resin housing.

d. Equip capacitor and arrestor with mounting nipple, flat washer, and nut suitable for knockout or bracket mounting.

2.19 SUPPORT AND FRAMING CHANNELS

2.19.1 Carbon Steel Framing Channel

a. Material: Rolled, mild strip steel, 12-gauge, ASTM A 570/A 570M, Grade 33.

b. Finish: Hot-dip galvanized after fabrication.

2.19.2 Paint Coated Framing Channel

Carbon steel framing channel with electro-deposited rust inhibiting acrylic or epoxy paint.

2.19.3 PVC Coated Framing Channel

Carbon steel framing channel with 40 mil polyvinyl chloride coating.

2.19.4 Stainless Steel Framing Channel

Rolled, ASTM A 167, Type 316 stainless steel, 12 gauge.

2.19.5 Extruded Aluminum Framing Channel

a. Material: Extruded from Type 6063-T6 aluminum alloy.

b. Fittings fabricated from Alloy 5052-H32.

2.19.6 Nonmetallic Framing Channel

a. Material: Fire retardent, fiber reinforced vinyl ester resin.

b. Channel fitting of same material as channel.

c. Nuts and bolts of long glass fiber reinforced polyurethane.

2.20 NAMEPLATES

2.20.1 Material

Laminated plastic.

2.20.2 Attachment Screws

Stainless steel.

2.20.3 Color

Black, engraved to a white core.

2.20.4 Engraving

a. Pushbuttons/Selector Switches: Name of drive controlled on one, two, or three lines, as required.

b. Panelboards: Panelboard designation, service voltage, and phases.

2.20.5 Letter Height

a. Pushbuttons/Selector Switches: 1/8 inch.

b. Panelboards: 1/4 inch.

PART 3 EXECUTION

3.1 GENERAL

Install equipment in accordance with NECA 1, applicable parts of NFPA 70 and local codes.

3.2 OUTLET AND DEVICE BOXES

Install suitable for conditions encountered at each outlet or device in wiring or raceway system, sized to meet NFPA 70 requirements.

a. Size:

1. Depth: Minimum 2 inches, unless otherwise required by structural conditions. Box extensions not permitted.
2. Hollow Masonry Construction: Install with sufficient depth such that conduit knockouts or hubs are in masonry void space.

b. Locations:

1. Drawing locations are approximate.
2. To avoid interference with mechanical equipment or structural features, relocate outlets as directed by the Contracting Officer.

c. Mounting Height:

1. General:
   a) Dimensions given to centerline of box.
   b) Where specified heights do not suit building construction or finish, mount as directed by Contracting Officer.
2. Light Switch: 48 inches above floor or final grade.
3. Convenience Receptacle:
   a) Industrial Areas, Workshops: 48 inches above floor.

b) Outdoor, All Areas: 24 inches above finished grade.

4. Switch, Motor Starting: 48 inches above floor, unless otherwise indicated.

d. Install plumb and level.

e. Flush Mounted:

1. Install with concealed conduit.
2. Install proper type extension rings or plaster covers to make edges of boxes flush with finished surface.
3. Holes in surrounding surface shall be no larger than required to receive box.

f. Support boxes independently of conduit by attachment to building structure or structural member.

g. Install bar hangers in frame construction, or fasten boxes directly with wood screws on wood, bolts and expansion shields on concrete or brick, toggle bolts on hollow masonry units, and machine screws threaded into steelwork.

h. Threaded studs driven in by powder charge and provided with lock washers and nuts are acceptable in lieu of expansion shields.

i. Boxes embedded in concrete or masonry need not be additionally supported.

j. Install galvanized mounting hardware in industrial areas.

k. Install separate junction boxes for flush or recessed lighting fixtures where required by fixture terminal temperature.

l. Boxes Supporting Fixtures: Provide means of attachment with adequate strength to support fixture.

m. Open no more knockouts in sheet steel device boxes than are required; seal unused openings.

n. Box Type (Steel Raceway System:

1. Exterior Locations: Cast metal.
2. Interior Dry Locations:
   a) Exposed Rigid Conduit: Sheet steel.
   b) Concealed Raceways: Sheet steel.
   c) Concrete Encased Raceways: Cast metal.
   d) Lighting Circuits, Ceiling: Sheet steel.
3. Interior Wet Locations: Cast metal.

o. Box Type, Corrosive Locations (PVC-Coated Rigid Galvanized Steel Raceway System): PVC-coated cast metal.

3.3 JUNCTION AND PULL BOXES

a. Install where shown and where necessary to terminate, tap-off, or redirect multiple conduit runs.

b. Install pull boxes where necessary in raceway system to facilitate conductor installation.

c. Install in conduit runs at least every 150 feet or after the equivalent of three right-angle bends.

d. Use outlet boxes as junction and pull boxes wherever possible and allowed by applicable codes.

e. Use conduit bodies as junction and pull boxes where no splices are required and their use is allowed by applicable codes.

f. Installed boxes shall be accessible.

g. Install plumb and level.

h. Support boxes independently of conduit by attachment to building structure or structural member.

i. Install bar hangers in frame construction, or fasten boxes directly with wood screws on wood, bolts and expansion shields on concrete or brick, toggle bolts on hollow masonry units, and machine screws or welded threaded studs on steelwork.

j. Threaded studs driven in by powder charge and provided with lock washers and nuts are acceptable in lieu of expansion shields.

k. Boxes embedded in concrete or masonry need not be additionally supported.

l. At or Below Grade:

1. Install boxes for below grade conduit flush with finished grade in locations outside of paved areas, roadways, or walkways.
2. If adjacent structure is available, box may be mounted on structure surface just above finished grade in accessible but unobtrusive location.
3. Obtain Contracting Officer's written acceptance prior to installation in paved areas, roadways, or walkways.
4. Use boxes and covers suitable to support anticipated weights. Provide traffic rated covers in traffic areas.

m. Flush Mounted:

1. Install with concealed conduit.
2. Holes in surrounding surface shall be no larger than required to receive box.
3. Make edges of boxes flush with final surface.

n. Mounting Hardware:

1. Noncorrosive Dry Areas: Galvanized.
2. Noncorrosive Wet Areas: Stainless steel.
3. Corrosive Areas: Stainless steel.

o. Location/Type:

1. Wet: NEMA 250, Type 4X.
2. Unfinished, Indoor and Outdoor, Wet, Dust, or Oil: NEMA 250, Type 13.
3. Underground Conduit: Concrete.
4. Corrosive Locations: NEMA 250 Type 4X, stainless steel.
5. Industrial Use in Areas Not Otherwise Classified: NEMA 250, Type 12, unless otherwise shown.

3.4 WIRING DEVICES

3.4.1 Switches

a. Mounting Height: See Article OUTLET AND DEVICE BOXES.

b. Install with switch operation in vertical position.

c. Install single-pole, two-way switches such that toggle is in up position when switch is on.

3.4.2 Receptacles

Install with grounding slot up except where horizontal mounting is shown, in which case install with neutral slot up.

3.4.2.1 Ground Fault Interrupter

Install feed-through model at locations where ground fault protection is specified for "downstream" conventional receptacles.

3.4.2.2 Special-Purpose Receptacles

Install in accordance with manufacturer's instructions.

3.4.2.3 Weatherproof Receptacles

a. Install in cast metal box.

b. Install such that hinge for protective cover is above receptacle opening.

3.4.3 Switch, Motor Rated

a. Install with switch operation in vertical position such that toggle is in up position when ON.

b. Install within sight of motor when used as a disconnect switch.

c. Mounting Height: See Article OUTLET AND DEVICE BOXES.

d. Enclosure Type: See Article OUTLET AND DEVICE BOXES.

3.5 DEVICE PLATES

Securely fasten to wiring device; ensure a tight fit to box.

3.5.1 Flush Mounted

Install with all four edges in continuous contact with finished wall surfaces without use of mats or similar materials. Plaster fillings will not be acceptable.

3.5.2 Surface Mounted

a. Plate shall not extend beyond sides of box unless plates have no sharp corners or edges.

b. Install with alignment tolerance to box of 1/16 inch.

3.5.3 Types (Unless Otherwise Shown)

a. Exterior: Weatherproof.

3.6 PUSHBUTTON, INDICATING LIGHT, AND SELECTOR SWITCH

3.6.1 Heavy-Duty, Oiltight Type

Locations (Unless Otherwise Shown): Nonhazardous, indoor, dry locations, including motor control centers, control panels, and individual stations.

3.6.2 Heavy-Duty, Watertight, and Corrosion-Resistant Type

a. Locations (Unless Otherwise Shown): Nonhazardous, outdoor, or normally wet areas.

b. Mounting: NEMA 250, Type 4X enclosure.

3.7 TERMINAL JUNCTION BOX

a. Install in accordance with Article JUNCTION AND PULL BOXES.

b. Label each block and terminal with permanently attached, nondestructible tag.

c. Location/Type:

1. Indoor, Dry: NEMA 250, Type 12.
2. Unfinished, Indoor and Outdoor, Wet: NEMA 250, Type 4.
3. Unfinished, Indoor and Outdoor, Wet and Corrosive: NEMA 250, Type 4X.
4. Unfinished, indoor and outdoor, wet, dust, or oil: NEMA 250, Type 13.

3.8 LIGHTING AND POWER DISTRIBUTION PANELBOARD

a. Install securely, plumb, in-line and square with walls.

b. Install top of cabinet 6 feet above floor unless otherwise shown.

c. Provide typewritten circuit directory for each panelboard.

d. Cabinet Location/Type:

1. General Use in Finished Areas: NEMA 250, Type 1.
2. Wet or Outdoor: NEMA 250, Type 3R, Outdoor.
3. Industrial Use in Areas Not Otherwise Classified: NEMA 250, Type 12, unless otherwise shown.

3.9 CIRCUIT BREAKER, FUSED SWITCH, AND NONFUSED SWITCH ENCLOSURES

3.9.1 Location/Type

a. Wet: NEMA 250, Type 4.

b. Corrosive: NEMA 250, Type 4X.

c. Wet/Corrosive: NEMA 250, Type 4X.

d. Industrial Use: NEMA 250, Type 12.

e. General Purpose: NEMA 250, Type 1.

f. Where Denoted WP: NEMA 250, Type 3R.

3.10 SUPPORT AND FRAMING CHANNEL

a. Install where required for mounting and supporting electrical equipment and raceway systems.

b. Channel Type:

1. Interior, Wet or Dry (Noncorrosive) Locations:
   a) PVC-Coated Conduit: PVC coated.
   b) Steel Raceway and Other Systems Not Covered: Carbon steel or paint coated.
2. Interior, Corrosive (Wet or Dry) Locations:
   a) PVC Conduit: Type 316 stainless steel or nonmetallic.
   b) PVC-Coated Steel Conduit and Other Systems Not Covered: Type 316 stainless steel, nonmetallic, or PVC-coated steel.
3. Outdoor, Noncorrosive Locations:
   a) Steel Raceway: Carbon steel or paint coated framing channel, except where mounted on aluminum handrail, then use aluminum framing channel.
4. Outdoor Corrosive Locations:
   a) PVC Conduit: Type 316 stainless steel or nonmetallic.
   b) PVC-Coated Steel Conduit, and Other Systems Not Covered: Type 316 stainless steel, nonmetallic, or PVC coated steel.

c. Paint cut ends prior to installation with the following:

1. Carbon Steel Channel: Zinc-rich primer.
2. Painted Channel: Rust-inhibiting epoxy or acrylic paint.
3. Nonmetallic Channel: Epoxy resin sealer.
4. PVC-Coated Channel: PVC patch.

3.11 DRY TYPE TRANSFORMER (0- TO 600-VOLT PRIMARY)

a. Load external vibration isolator such that no direct transformer unit metal is in direct contact with mounting surface.

b. Provide moisture-proof, flexible conduit for electrical connections.

c. Connect voltage taps to achieve (approximately) rated output voltage under normal plant load conditions.

d. Provide wall brackets for single-phase units, 15 to 167-1/2 kVA, and three-phase units, 15 to 112 kVA.

e. Isolation Transformer: Ground isolation shields to unit enclosure with conductor of same material, and same size minimum, as shield ground lead provided with unit.

3.12 MOTOR SURGE PROTECTION

a. Ground in accordance with NFPA 70.

b. Low Voltage: Ground terminals to equipment bus.

-- End of Section --

SECTION TABLE OF CONTENTS

DIVISION 16 - ELECTRICAL

SECTION 16110

RACEWAYS

PART 1 GENERAL

1.1 REFERENCES
1.2 SUBMITTALS
1.3 UL COMPLIANCE
1.4 QUALIFICATIONS

PART 2 PRODUCTS

2.1 CONDUIT AND TUBING
2.1.1 PVC-Coated Rigid Galvanized Steel Conduit
2.1.2 PVC Schedule 40 Conduit
2.1.3 Flexible Metal, Liquid-Tight Conduit
2.2 FITTINGS
2.2.1 PVC-Coated Rigid Galvanized Steel Conduit
2.2.2 PVC Conduit and Tubing
2.2.3 Flexible Metal, Liquid-Tight Conduit
2.2.4 Watertight Entrance Seal Device
2.3 PRECAST HANDHOLES
2.3.1 Concrete Strength
2.3.2 Loading
2.3.3 Access
2.3.4 Drainage
2.3.5 Raceway Entrances
2.3.6 Embedded Pulling Iron
2.3.7 Cable Racks
2.3.8 Handhole Frames and Covers
2.3.9 Hardware
2.4 ACCESSORIES
2.4.1 Duct Bank Spacers
2.4.2 Identification Devices
2.4.3 Wraparound Duct Band

PART 3 EXECUTION

3.1 GENERAL
3.2 INSTALLATION IN CAST-IN-PLACE STRUCTURAL CONCRETE
3.2.1 Slabs and Walls
3.2.2 Columns and Beams
3.3 CONDUIT APPLICATION
3.3.1 Diameter
3.3.2 Exterior, Exposed, Noncorrosive
3.3.3 Interior, Exposed
3.3.4 Interior, Concealed (Not Embedded in Concrete)
3.3.5 Aboveground, Embedded in Concrete Walls, Ceilings, or Floors

3.3.6 Direct Earth Burial
3.3.7 Concrete-Encased Raceways
3.3.8 Under Slabs-On-Grade
3.3.9 Conduits Between AFDs and Motors
3.4 CONNECTIONS
3.5 PENETRATIONS
3.6 SUPPORT
3.7 BENDS
3.8 EXPANSION/DEFLECTION FITTINGS
3.9 PVC CONDUIT
3.9.1 Solvent Welding
3.9.2 Adapters
3.9.3 Belled-End Conduit
3.10 PVC-COATED RIGID STEEL CONDUIT
3.11 WIREWAYS
3.12 TERMINATION AT ENCLOSURES
3.12.1 Cast Metal Enclosure
3.12.2 NEMA 4 and 4X Boxes, Cabinets, and Enclosures
3.12.3 Sheet Metal Boxes, Cabinets, and Enclosures
3.12.4 Switchboard and Free-Standing Enclosures
3.13 UNDERGROUND RACEWAYS
3.14 HANDHOLES
3.15 IDENTIFICATION
3.16 EMPTY RACEWAYS
3.17 IDENTIFICATION DEVICES
3.17.1 Raceway Tags
3.17.2 Warning Tape
3.18 PROTECTION OF INSTALLED WORK

-- End of Section Table of Contents --

SECTION 16110

RACEWAYS

PART 1 GENERAL

1.1 REFERENCES

The publications listed below form a part of this specification to the extent referenced. The publications are referred to within the text by the basic designation only.

AMERICAN NATIONAL STANDARDS INSTITUTE (ANSI)

ANSI C80.1	(1994) Rigid Steel Conduit - Zinc Coated

ASTM INTERNATIONAL (ASTM)

ASTM C 857	(1995; R 2001) Standard Practice for Minimum Structural Design Loading for Underground Precast Concrete Utility Structures

NATIONAL ELECTRICAL CONTRACTOR'S ASSOCIATION (NECA)

NECA 1	(2000) Standard of Installation

NATIONAL ELECTRICAL MANUFACTURERS ASSOCIATION (NEMA)

NEMA RN 1	(1998) Polyvinyl-Chloride (PVC) Externally Coated Galvanized Rigid Steel Conduit and Intermediate Metal Conduit
NEMA TC 2	(1998) Electrical Polyvinyl Chloride (PVC) Tubing (EPT) and Conduit (EPC-40 and EPC-80)
NEMA TC 6	(1990) PVC and ABS Plastic Utilities Duct for Underground Installation

NATIONAL FIRE PROTECTION ASSOCIATION (NFPA)

NFPA 70	(2002) National Electrical Code

UNDERWRITERS LABORATORIES (UL)

UL 6	(2000) Rigid Metal Conduit
UL 360	(1996; Rev thru Aug 2001) Liquid-Tight Flexible Steel Conduit

UL 514B	(1997; Rev Oct 1998) Fittings for Cable and Conduit
UL 651A	(2000) Type EB and A Rigid PVC Conduit and HDPE Conduit

1.2 SUBMITTALS

Government approval is required for submittals with a "G" designation; submittals not having a "G" designation are for information only or as otherwise designated. When used, a designation following the "G" designation identifies the office that will review the submittal for the Government. The following shall be submitted in accordance with Section 01330 SUBMITTAL PROCEDURES:

SD-02 Shop Drawings

PVC-Coated Rigid galvanized steel conduit; G, RE
PVC Schedule 40 conduit; G, RE
Flexible metal, liquid-tight conduit; G, RE
Fittings; G, RE
Precast Handholes;
G, RE

1.3 UL COMPLIANCE

Materials manufactured within scope of Underwriters Laboratories shall conform to UL Standards and have an applied UL listing mark.

1.4 QUALIFICATIONS

PVC-Coated, Rigid Steel Conduit Installer: Must be certified by the conduit manufacturer as having received minimum 2 hours of training on correct installation procedures.

PART 2 PRODUCTS

2.1 CONDUIT AND TUBING

2.1.1 PVC-Coated Rigid Galvanized Steel Conduit

a. Meet requirements of NEMA RN 1.

b. Material:

1. Meet requirements of ANSI C80.1 and UL 6.
2. Exterior finish : PVC coating, 40 mils nominal thickness, bond to metal shall have tensile strength greater than PVC.
3. Interior finish: Urethane coating, 2 mils nominal thickness.

c. Threads: Hot-dipped galvanized and factory coated with urethane.

d. Bendable without damage to either interior or exterior coating.

2.1.2 PVC Schedule 40 Conduit

a. Meet requirements of NEMA TC 2 and UL 651A.

b. UL listed for concrete encasement, underground direct burial, concealed or direct sunlight exposure, and 90 degrees C insulated conductors.

2.1.3 Flexible Metal, Liquid-Tight Conduit

a. UL 360 listed for 105 degrees C insulated conductors.

b. Material: Galvanized steel, with an extruded PVC jacket.

2.2 FITTINGS

2.2.1 PVC-Coated Rigid Galvanized Steel Conduit

a. Meet requirements of UL 514B.

b. Fittings: Rigid galvanized steel type, PVC coated by conduit manufacturer.

c. Conduit Bodies: Cast metal hot-dipped galvanized or urethane finish. Cover shall be of same material as conduit body. PVC coated by conduit manufacturer.

d. Finish: 40 mil PVC exterior, 2 mil urethane interior.

e. Overlapping pressure sealing sleeves.

f. Conduit Hangers, Attachments, and Accessories: PVC-coated.

2.2.2 PVC Conduit and Tubing

a. Meet requirements of NEMA TC 6.

b. Type: PVC, slip-on.

2.2.3 Flexible Metal, Liquid-Tight Conduit

a. Metal insulated throat connectors with integral nylon or plastic bushing rated for 105 degrees C.

b. Insulated throat and sealing O-rings.

2.2.4 Watertight Entrance Seal Device

a. New Construction:

1. Material: Oversized sleeve, malleable iron body with sealing ring, pressure ring, grommet seal, and pressure clamp.
2. Cored-Hole Application:
   a) Material: Assembled dual pressure disks, neoprene sealing

ring, and membrane clamp.

2.3 PRECAST HANDHOLES

2.3.1 Concrete Strength

Minimum, 3,000 psi compressive, in 28 days.

2.3.2 Loading

AASHTO, H-20 in accordance with ASTM C 857.

2.3.3 Access

Provide cast concrete 6 or 12 inch risers and access hole adapters between top of manhole and finished grade at required elevations.

2.3.4 Drainage

a. Slope floors toward drain points, leaving no pockets or other nondraining areas.

b. Provide drainage outlet or sump at low point of floor constructed with a heavy, cast iron, slotted or perforated hinged cover, and 4 inch minimum outlet and outlet pipe.

2.3.5 Raceway Entrances

a. Provide on all four sides.

b. For raceways to be installed under this Contract, provide knockout panels or precast individual raceway openings.

c. At entrances where raceways are to be installed by others, provide minimum 12 inch high by 24 inch wide knockout panels for future raceway installation.

2.3.6 Embedded Pulling Iron

a. Material: 3/4 inch diameter stock, fastened to overall steel reinforcement before concrete is placed.

b. Location:

1. Wall: Opposite each raceway entrance and knockout panel for future raceway entrance.
2. Floor: Centered below manhole or handhole cover.

2.3.7 Cable Racks

a. Arms and Insulators: Adjustable, of sufficient number to accommodate cables for each raceway entering or leaving manhole, including spares.

b. Wall Attachment:

1. Adjustable inserts in concrete walls. Bolts or embedded studs not permitted.
2. Insert Spacing: Maximum 3 foot on center entire inside perimeter of manhole.
3. Arrange so that spare raceway ends are clear for future cable installation.

2.3.8 Handhole Frames and Covers

a. Material: Steel, hot-dipped galvanized.

b. Cover Type: Solid, bolt-on, hinged, of checkered design.

c. Cover Loading: AASHTO H-20.

d. Cover Designation: Burn by welder, on upper side in integral letters, minimum 2 inches in height, appropriate titles:

1. 600 Volts and Below: ELECTRIC LV.

2.3.9 Hardware

Steel, hot-dip galvanized.

Furnish knockout for ground rod in each handhole.

2.4 ACCESSORIES

2.4.1 Duct Bank Spacers

a. Type: Nonmetallic, interlocking, for multiple conduit sizes.

b. Suitable for all types of conduit.

2.4.2 Identification Devices

a. Raceway Tags:

1. Material: Permanent, nonferrous metal.
2. Shape: Round.
3. Raceway Designation: Pressure stamped, embossed, or engraved.
4. Tags relying on adhesives or taped-on markers not permitted.

b. Warning Tape:

1. Material: Polyethylene, 4 mil gauge.
2. Color: Red.
3. Width: Minimum 3 inch.
4. Designation: Warning on tape that electric circuit is located below tape.

c. Material: Sheet bronze, consisting of double-ended arrows,

straight for straight runs and bent at locations where runs change direction.

1. Designation: Incise to depth of 3/32 inch, ELECTRIC CABLES, in letters 1/4 inch high.
2. Minimum Dimension: 1/4 inch thick, 10 inches long, and 3/4 inch wide.

2.4.3 Wraparound Duct Band

Material: Heat-shrinkable, cross-linked polyolefin, precoated with hot-melt adhesive.

PART 3 EXECUTION

3.1 GENERAL

a. Conduit and Tubing sizes shown are based on the use of copper conductors. Reference Section 16120 CONDUCTORS, concerning conduit sizing for aluminum conductors.

b. All installed Work shall comply with NECA 1.

c. Crushed or deformed raceways not permitted.

d. Maintain raceway entirely free of obstructions and moisture.

e. Immediately after installation, plug or cap raceway ends with watertight and dust-tight seals until time for pulling in conductors.

f. Sealing Fittings: Provide drain seal in vertical raceways where condensate may collect above sealing fitting.

g. Avoid moisture traps where possible. When unavoidable in exposed conduit runs, provide junction box and drain fitting at conduit low point.

h. Group raceways installed in same area.

i. Proximity to Heated Piping: Install raceways minimum 12 inches from parallel runs.

j. Follow structural surface contours when installing exposed raceways. Avoid obstruction of passageways.

k. Run exposed raceways parallel or perpendicular to walls, structural members, or intersections of vertical planes.

l. Block Walls: Do not install raceways in same horizontal course with reinforcing steel.

m. Install watertight fittings in outdoor, underground, or wet locations.

n. Paint threads and cut ends, before assembly of fittings, galvanized conduit, or PVC-coated galvanized conduit, installed in exposed or damp locations with zinc-rich paint or liquid galvanizing compound.

o. Metal conduit to be reamed, burrs removed, and cleaned before installation of conductors, wires, or cables.

p. Do not install raceways in concrete equipment pads, foundations, or beams.

q. Horizontal raceways installed under floor slabs shall lie completely under slab, with no part embedded within slab.

r. Install concealed, embedded, and buried raceways so that they emerge at right angles to surface and have no curved portion exposed.

3.2 INSTALLATION IN CAST-IN-PLACE STRUCTURAL CONCRETE

a. Minimum cover 2 inches, including all fittings.

b. Conduit placement shall not require changes in reinforcing steel location or configuration.

c. Provide nonmetallic support during placement of concrete to ensure raceways remain in position.

d. Conduit larger than 1 inch shall not be embedded in concrete slabs, walls, foundations, columns or beams unless approved by the Contracting Officer.

3.2.1 Slabs and Walls

a. Trade size of conduit not to exceed one-fourth of the slab or wall thickness.

b. Install within middle two-fourths of slab or wall.

c. Separate conduit less than 2 inch trade size by a minimum ten times conduit trade size, center-to-center, unless otherwise shown.

d. Separate conduit 2 inch and greater trade size by a minimum eight times conduit trade size, center-to-center, unless otherwise shown.

e. Cross conduit at an angle greater than 45 degrees, with minimum separation of 1 inch.

f. Separate conduit by a minimum six times the outside dimension of expansion/deflection fittings at expansion joints.

g. Conduit shall not be installed below the maximum water surface elevation in walls of water holding structures.

3.2.2 Columns and Beams

a. Trade size of conduit not to exceed one-fourth of beam thickness.

b. Conduit cross-sectional area not to exceed 4 percent of beam or column cross section.

3.3 CONDUIT APPLICATION

3.3.1 Diameter

Minimum 3/4 inch.

3.3.2 Exterior, Exposed, Noncorrosive

PVC-Coated Rigid galvanized steel.

3.3.3 Interior, Exposed

PVC-Coated Rigid galvanized steel.

3.3.4 Interior, Concealed (Not Embedded in Concrete)

PVC-Coated Rigid galvanized steel.

3.3.5 Aboveground, Embedded in Concrete Walls, Ceilings, or Floors

PVC-Coated Rigid galvanized steel.

3.3.6 Direct Earth Burial

PVC Schedule 40.

3.3.7 Concrete-Encased Raceways

PVC Schedule 40.

3.3.8 Under Slabs-On-Grade

PVC Schedule 40.

3.3.9 Conduits Between AFDs and Motors

Flexible Metal Liquid tight or PVC-Coated Rigid Galvanized Steel.

3.4 CONNECTIONS

a. For motors, wall or ceiling mounted fans and unit heaters, dry type transformers, electrically operated valves, instrumentation, and other equipment where flexible connection is required to minimize vibration:

1. Conduit Size 4 Inches or Less: Flexible, liquid-tight conduit.

2. Conduit Size Over 4 Inches: Nonflexible.
3. Wet or Corrosive Areas: Flexible metal liquid-tight.
4. Dry Areas: Flexible, metallic liquid-tight.
5. Length: 18 inch minimum, 60 inch maximum, sufficient to allow movement or adjustment of equipment.

b. Outdoor Areas, Process Areas Exposed to Moisture, and Areas Required to be Oiltight and Dust-Tight: Flexible metal, liquid-tight conduit.

c. Transition From Underground or Concrete Embedded to Exposed: PVC-Coated Rigid galvanized steel conduit.

d. Under Equipment Mounting Pads: PVC-Coated Rigid galvanized steel conduit.

e. Exterior Light Pole Foundations: PVC-Coated Rigid galvanized steel conduit.

3.5 PENETRATIONS

a. Make at right angles, unless otherwise shown.

b. Notching or penetration of structural members, including footings and beams, not permitted.

c. Fire-Rated Walls, Floors, or Ceilings: Firestop openings around penetrations to maintain fire-resistance rating.

d. Apply single layer of wraparound duct band to all metallic conduit protruding through concrete floor slabs to a point 2 inches above and 2 inches below concrete surface.

e. Concrete Walls, Floors, or Ceilings (Aboveground): Provide nonshrink grout dry-pack, or use watertight seal device.

3.6 SUPPORT

a. Support from structural members only, at intervals not exceeding NFPA 70 requirements, and in any case not exceeding 10 feet. Do not support from piping, pipe supports, or other raceways.

b. Multiple Adjacent Raceways: Provide ceiling trapeze or shown.

c. Application/Type of Conduit Strap:

1. PVC-Coated Rigid galvanized steel conduit: PVC-Coated metal.
2. Nonmetallic Conduit: Nonmetallic or PVC coated metal.

d. Provide and attach wall brackets, strap hangers, or ceiling trapeze as follows:

1. Wood: Wood screws.
2. Hollow Masonry Units: Toggle bolts.

3. Concrete or Brick: Expansion shields, or threaded studs driven in by powder charge, with lock washers and nuts or shown.
4. Steelwork: Machine screws.
5. Location/Type of Hardware:
   a) Dry, Noncorrosive Areas: Galvanized.
   b) Wet, Noncorrosive Areas: Stainless steel.
   c) Corrosive Areas: Stainless steel.

e. Nails or wooden plugs inserted in concrete or masonry for attaching raceway not permitted. Do not weld raceways or pipe straps to steel structures. Do not use wire in lieu of straps or hangers.

3.7 BENDS

a. Install concealed raceways with a minimum of bends in the shortest practical distance.

b. Make bends and offsets of longest practical radius.

c. Install with symmetrical bends or cast metal fittings.

d. Avoid field-made bends and offsets, but where necessary, make with acceptable hickey or bending machine. Do not heat metal raceways to facilitate bending.

e. Make bends in parallel or banked runs from same center or centerline with same radius so that bends are parallel.

f. Factory elbows may be installed in parallel or banked raceways if there is change in plane of run, and raceways are same size.

g. PVC Conduit:

1. Bends 30-Degree and Larger: Provide factory-made elbows.
2. 90-Degree Bends: Provide PVC coated rigid galvanized steel elbows.
3. Use manufacturer's recommended method for forming smaller bends.

h. Flexible Conduit: Do not make bends that exceed allowable conductor bending radius of cable to be installed or that significantly restricts conduit flexibility.

i. Contractor shall limit total bends between pull points to 270 degrees.

3.8 EXPANSION/DEFLECTION FITTINGS

a. Provide on all raceways at all structural expansion joints, and in long tangential runs.

b. Provide expansion/deflection joints for 50 degrees F maximum temperature variation.

c. Install in accordance with manufacturer's instructions.

3.9 PVC CONDUIT

3.9.1 Solvent Welding

a. Provide manufacturer recommended solvent; apply to all joints.

b. Install such that joint is watertight.

3.9.2 Adapters

a. PVC to Metallic Fittings: PVC terminal type.

b. PVC to Rigid Metal Conduit: PVC female adapter.

3.9.3 Belled-End Conduit

Bevel the unbelled end of the joint prior to joining.

3.10 PVC-COATED RIGID STEEL CONDUIT

a. Install in accordance with manufacturer's instructions.

b. All tools and equipment used in the cutting, bending, threading and installation of PVC-coated rigid steel conduit shall be designed to limit damage to the PVC coating.

c. Provide PVC boot to cover all exposed threading.

3.11 WIREWAYS

a. Install in accordance with manufacturer's instructions.

b. Locate with cover on accessible vertical face of wireway, unless otherwise shown.

c. Applications:

1. Metal wireway in indoor dry locations.
2. Nonmetallic wireway in indoor wet, outdoor, and corrosive locations.

3.12 TERMINATION AT ENCLOSURES

3.12.1 Cast Metal Enclosure

Provide manufacturer's pre-molded insulating sleeve inside metallic conduit terminating in threaded hubs.

3.12.2 NEMA 4 and 4X Boxes, Cabinets, and Enclosures

Terminate conduit in threaded conduit hubs, maintaining enclosure integrity.

3.12.3 Sheet Metal Boxes, Cabinets, and Enclosures

a. PVC-Coated Rigid Galvanized Steel Conduit: Provide PVC-coated, liquid-tight, metallic connector.

b. Flexible Metal Conduit: Provide two screw type, insulated, malleable iron connectors.

c. PVC Schedule 40 Conduit: Provide PVC terminal adapter with lock nut.

3.12.4 Switchboard and Free-Standing Enclosures

Terminate conduit entering bottom with grounding bushing; provide a grounding jumper extending to equipment ground bus or grounding pad.

3.13 UNDERGROUND RACEWAYS

a. Grade: Maintain minimum grade of 4 inches in 100 feet, either from one manhole, handhole, or pull box to the next, or from a high point between them, depending on surface contour.

b. Cover: Maintain minimum 2 foot cover above conduit and concrete encasement, unless otherwise shown.

c. Make routing changes as necessary to avoid obstructions or conflicts.

d. Couplings: In multiple conduit runs, stagger so that couplings in adjacent runs are not in same transverse line.

e. Union type fittings not permitted.

f. Spacers:

1. Provide preformed, nonmetallic spacers, designed for such purpose, to secure and separate parallel conduit runs in a trench or concrete encasement.
2. Install at intervals not greater than that specified in NFPA 70 for support of the type conduit used, but in no case greater than 10 feet.

g. Support conduit so as to prevent bending or displacement during backfilling or concrete placement.

h. Installation with Other Piping Systems:

1. Crossings: Maintain minimum 12 inch vertical separation.
2. Parallel Runs: Maintain minimum 12 inch separation.
3. Installation over valves or couplings not permitted.

i. Metallic Raceway Coating: Apply wraparound duct band with one-half tape width overlap to obtain two complete layers.

j. Provide expansion fittings that allow minimum of 4 inches of movement in vertical conduit runs from underground where exposed conduit will be fastened to or will enter building or structure.

k. Provide deflectional/expansion fittings in conduit runs that exit building or structure below grade. Conduit from building wall to fitting shall be PVC-coated rigid steel.

l. Concrete Encasement:

1. As specified in Section 03307 CONCRETE FOR MINOR STRUCTURES.
2. Concrete Color: Red.

m. Backfill:

1. As specified in Section 02316 EXCAVATION, TRENCHING, AND BACKFILLING FOR UTILITY SYSTEMS.
2. Do not backfill until inspected by Contracting Officer.

3.14 HANDHOLES

a. Excavate, shore, brace, backfill, and final grade in accordance with Section 02316 EXCAVATION, FILLING AND BACKFILLING FOR UTILITIES SYSTEMS.

b. Do not install until final raceway grading has been determined.

c. Install such that raceways enter at nearly right angles and as near as possible to one end of wall, unless otherwise shown.

d. Grounding: As specified in Section 16450 GROUNDING.

3.15 IDENTIFICATION

Field stamp covers with HANDHOLE NUMBER as indicated. Stamped numbers to be 1 inch minimum height.

3.16 EMPTY RACEWAYS

a. Provide permanent, removable cap over each end.

b. Provide PVC plug with pull tab for underground raceways with end bells.

c. Provide nylon pull cord.

d. Identify, as specified in Article IDENTIFICATION DEVICES, with waterproof tags attached to pull cord at each end, and at intermediate pull point.

3.17 IDENTIFICATION DEVICES

3.17.1 Raceway Tags

a. Identify origin and destination.

b. Install at each terminus, near midpoint, and at minimum intervals of every 50 feet of exposed raceway, whether in ceiling space or surface mounted.

c. Provide noncorrosive wire for attachment.

3.17.2 Warning Tape

Install approximately 12 inches above underground or concrete-encased raceways. Align parallel to, and within 12 inches of, centerline of runs.

3.18 PROTECTION OF INSTALLED WORK

a. Protect products from effects of moisture, corrosion, and physical damage during construction.

b. Provide and maintain manufactured watertight and dust-tight seals over all conduit openings during construction.

c. Touch up painted conduit threads after assembly to cover nicks or scars.

d. Touch up coating damage to PVC-coated conduit with patching compound approved by manufacturer; compound shall be kept refrigerated according to manufacturers' instructions until time of use.

-- End of Section --

SECTION TABLE OF CONTENTS

DIVISION 16 - ELECTRICAL

SECTION 16120

CONDUCTORS

PART 1 GENERAL

1.1 REFERENCES
1.2 SUBMITTALS
1.3 UL COMPLIANCE

PART 2 PRODUCTS

2.1 CONDUCTORS 600 VOLTS AND BELOW
2.1.1 Conductor Type
2.1.2 Insulation
2.1.3 Flexible Cords and Cables
2.2 600-VOLT RATED CABLE
2.2.1 General
2.2.2 Type 1, Multiconductor Control Cable
2.2.2.1 Conductors
2.2.2.2 Cable
2.2.2.3 Cable Sizes
2.2.3 Type 3-No. 16 AWG, Twisted, Shielded Pair, Instrumentation Cable
2.2.3.1 Outer Jacket
2.2.3.2 Individual Pair Shield
2.2.3.3 Dimension
2.2.3.4 Conductors
2.2.4 Type 5-No. 18 AWG, Multi-Twisted, Shielded Pairs with a Common, Overall Shield Instrumentation Cable
2.2.4.1 Conductors
2.2.4.2 Cable Sizes
2.2.4.3 Cable Shield
2.3 GROUNDING CONDUCTORS
2.3.1 Equipment
2.3.2 Direct Buried
2.4 ACCESSORIES FOR CONDUCTORS 600 VOLTS AND BELOW
2.4.1 Tape
2.4.2 Identification Devices
2.4.3 Connectors and Terminations
2.4.4 Cable Lugs
2.4.5 Cable Ties
2.4.6 Heat Shrinkable Insulation
2.5 PULLING COMPOUND
2.6 WARNING TAPE
2.7 SOURCE QUALITY CONTROL

PART 3 EXECUTION

3.1 GENERAL

3.2 POWER CONDUCTOR COLOR CODING
3.2.1 Conductors 600 Volts and Below
3.3 CIRCUIT IDENTIFICATION
3.3.1 Method
3.3.2 Conductors Above 600 Volts
3.3.2.1 Colors
3.4 CONDUCTORS 600 VOLTS AND BELOW
3.4.1 Connections and Terminations
3.4.2 Splices and Terminations
3.4.3 Cabinets and Panels
3.4.4 Control and Instrumentation Wiring
3.4.5 Extra Conductor Length
3.5 FIELD QUALITY CONTROL

-- End of Section Table of Contents --

SECTION 16120

CONDUCTORS

PART 1 GENERAL

1.1 REFERENCES

The publications listed below form a part of this specification to the extent referenced. The publications are referred to within the text by the basic designation only.

ASTM INTERNATIONAL (ASTM)

ASTM B 8	(1999) Concentric-Lay-Stranded Copper Conductors, Hard, Medium-Hard, or Soft

NATIONAL ELECTRICAL CONTRACTOR'S ASSOCIATION (NECA)

NECA 1	(2000) Standard of Installation

NATIONAL ELECTRICAL MANUFACTURERS' ASSOCIATION (NEMA)

NEMA CC 1	(2002) Electric Power Connection for Substations
NEMA WC 3	(1992; Rev 1 1994) Rubber-Insulated Wire and Cable for the Transmission and Distribution of Electrical Energy
NEMA WC 5	(1992; Rev 2 1996) Thermoplastic-Insulated Wire and Cable for the Transmission and Distribution of Electrical Energy
NEMA WC 7	(1998; Rev 3 1996) Cross-Linked-Thermosetting-Polyethylene-Insulated Wire and Cable for the Transmission and Distribution of Electrical Energy
NEMA WC 8	(1988: Rev 3 1996) Ethylene-Propylene-Rubber-Insulated Wire and Cable for the Transmission and Distribution of Electrical Energy
NEMA WC 55	(1992; R 1999) Instrumentation Cables and Thermocouple Wire (ICEA S 82 552)

NATIONAL FIRE PROTECTION ASSOCIATION (NFPA)

NFPA 70	(2002) National Electrical Code

UNDERWRITERS LABORATORIES (UL)

UL 13	(1996; Rev thru Nov 2002) Power-Limited Circuit Cables
UL 44	(1999; Rev thru Apr 2001) Thermoset-Insulated Wires and Cables
UL 62	(1997; Rev thru Apr 1999) Standard for Flexible Cord and Fixture Wire
UL 486A	(1997; Rev thru May 2001) Wire Connectors and Soldering Lugs for Use with Copper Conductors
UL 486C	(2000; Rev thru Oct 2001) Splicing Wire Connections
UL 510	(1994; Rev thru Apr 1998) Polyvinyl Chloride, Polyethylene, and Rubber Insulating Tape
UL 854	(1999; Rev thru Aug 2001) Service-Entrance Cables
UL 1277	(2003) Standard for Electrical Power and Control Tray Cables with Optional Optical-Fiber Members
UL 1581	(2001) Reference Standard for Electrical Wires, Cables, and Flexible Cords

1.2 SUBMITTALS

Government approval is required for submittals with a "G" designation; submittals not having a "G" designation are for information only or as otherwise designated. When used, a designation following the "G" designation identifies the office that will review the submittal for the Government. The following shall be submitted in accordance with Section 01330 SUBMITTAL PROCEDURES:

SD-02 Shop Drawings

Conductors 600 Volts and Below; G, RE
600-Volt Rated Cable; G, RE
Grounding Conductors; G, RE
Accessories for Conductors 600 Volts and Below; G, RE

1.3 UL COMPLIANCE

Materials manufactured within scope of Underwriters Laboratories shall conform to UL Standards and have an applied UL listing mark.

PART 2 PRODUCTS

2.1 CONDUCTORS 600 VOLTS AND BELOW

Conform to applicable requirements of NEMA WC 3, NEMA WC 5, and NEMA WC 7.

2.1.1 Conductor Type

a. 120- and 277-Volt Lighting, No. 10 AWG and Smaller: Stranded copper.

b. 120-Volt Receptacle Circuits, No. 10 AWG and Smaller: Stranded copper.

c. All Other Circuits: Stranded copper.

2.1.2 Insulation

Type XHHW, except for sizes No. 1 and larger, with XHHW-2 insulation.

2.1.3 Flexible Cords and Cables

a. Type SOW-A/50 with ethylene propylene rubber insulation in accordance with UL 62.

b. Conform to physical and minimum thickness requirements of NEMA WC 8.

2.2 600-VOLT RATED CABLE

2.2.1 General

a. Type: TC, meeting requirements of UL 1277, including Vertical Tray Flame Test at 20,000 Btu/hr, and NFPA 70, Article 340, or UL 13 Listed Power Limited Circuit Cable meeting requirements of NFPA 70, Article 725.

b. Permanently and legibly marked with manufacturer's name, maximum working voltage for which cable was tested, type of cable, and UL listing mark.

c. Suitable for installation in open air, in cable trays, or conduit.

d. Minimum Temperature Rating: 90 degrees C dry locations, 75 degrees C wet locations.

e. Overall Outer Jacket: PVC, flame-retardant, sunlight- and oil-resistant.

2.2.2 Type 1, Multiconductor Control Cable

2.2.2.1 Conductors

a. No. 14 AWG, seven-strand copper.

b. Insulation: 15 mil PVC with 4 mil nylon.

c. UL 1581 listed as Type XHHW rated VW-1.

d. Conductor group bound with spiral wrap of barrier tape.

e. Color Code: In accordance with NEMA WC 5, Method 1, Sequence K-2.

2.2.2.2 Cable

Passes the ICEA T-29-520 210,000 Btu/hr Vertical Tray Flame Test.

2.2.2.3 Cable Sizes

No. of Conductors	Max. Outside Diameter (Inches)	Jacket Thickness (Mils)
3	0.41	45
5	0.48	45
7	0.52	45
12	0.72	60
19	0.83	60
25	1.00	60
37	1.15	80

2.2.3 Type 3-No. 16 AWG, Twisted, Shielded Pair, Instrumentation Cable

Single pair, designed for noise rejection for process control, computer, or data log applications meeting NEMA WC 55 requirements.

2.2.3.1 Outer Jacket

45 mil nominal thickness.

2.2.3.2 Individual Pair Shield

1.35 mil, double-faced aluminum/synthetic polymer overlapped to provide 100 percent coverage.

2.2.3.3 Dimension

0.31 inch nominal OD.

2.2.3.4 Conductors

a. Bare soft annealed copper, Class B, seven-strand concentric, meeting requirements of ASTM B 8.

b. 20 AWG, seven-strand tinned copper drain wire.

c. Insulation: 15 mil nominal PVC.

d. Jacket: 4 mil nominal nylon.

e. Color Code: Pair conductors black and red.

2.2.4 Type 5-No. 18 AWG, Multi-Twisted, Shielded Pairs with a Common, Overall Shield Instrumentation Cable

Designed for use as instrumentation, process control, and computer cable, meeting NEMA WC 55 requirements.

2.2.4.1 Conductors

a. Bare soft annealed copper, Class B, seven-strand concentric, in accordance with ASTM B 8.

b. Tinned copper drain wires.

c. Pair drain wire size AWG 20, group drain wire size AWG 18.

d. Insulation: 15 mil PVC.

e. Jacket: 4 mil nylon.

f. Color Code: Pair conductors black and red with red conductor numerically printed for group identification.

g. Individual Pair Shield: 1.35 mil, double-faced aluminum/synthetic polymer.

2.2.4.2 Cable Sizes

Number of Pairs	Maximum Outside Diameter (inches)	Nominal Jacket Thickness (mils)
4	0.50	45
8	0.68	60
12	0.82	60

2.2.4.3 Cable Shield

2.35 mil, double-faced aluminum/synthetic polymer, overlapped for 100 percent coverage.

2.3 GROUNDING CONDUCTORS

2.3.1 Equipment

Stranded copper with green, Type XHHW except for size No. 1 and larger with XHHW-2 insulation.

2.3.2 Direct Buried

Bare stranded copper.

2.4 ACCESSORIES FOR CONDUCTORS 600 VOLTS AND BELOW

2.4.1 Tape

a. General Purpose, Flame Retardant: 7 mil, vinyl plastic, Scotch Brand 33, rated for 90 degrees C minimum, meeting requirements of UL 510.

b. Flame Retardant, Cold and Weather Resistant: 8.5 mil, vinyl plastic, Scotch Brand 88.

c. Arc and Fireproofing: 30 mil, elastomer.

2.4.2 Identification Devices

a. Sleeve: Permanent, PVC, yellow or white, with legible machine-printed black markings.

b. Marker Plate: Nylon, with legible designations permanently hot stamped on plate.

c. Grounding Conductor: Permanent green heat-shrink sleeve, 2 inch minimum.

2.4.3 Connectors and Terminations

a. Nylon, Self-Insulated Crimp Connectors:

b. Nylon, Self-Insulated, Crimp Locking-Fork, Torque-Type Terminator:

c. Self-Insulated, Freespring Wire Connector (Wire Nuts):

1. Plated steel, square wire springs.
2. UL 486C.

d. Self-Insulated, Set Screw Wire Connector:

1. Two piece compression type with set screw in brass barrel.
2. Insulated by insulator cap screwed over brass barrel.

2.4.4 Cable Lugs

a. In accordance with NEMA CC 1.

b. Rated 600 volts of same material as conductor metal.

c. Insulated, Locking-Fork, Compression Lugs:
a) Suitable for use with 75 degrees C wire at full NFPA 70, 75 degrees C ampacity.
b) Seamless.

d. Uninsulated Crimp Connectors and Terminators:
a) Suitable for use with 75 degrees C wire at full NFPA 70, 75 degrees C ampacity.

e. Uninsulated, Bolted, Two-Way Connectors and Terminators.

2.4.5 Cable Ties

Nylon, adjustable, self-locking, and reusable.

2.4.6 Heat Shrinkable Insulation

Thermally stabilized, crosslinked polyolefin.

2.5 PULLING COMPOUND

a. Nontoxic, noncorrosive, noncombustible, nonflammable, wax-based lubricant; UL listed.

b. Suitable for rubber, neoprene, PVC, polyethylene, hypalon, CPE, and lead-covered wire and cable.

c. Suitable for zinc-coated steel, aluminum, PVC, bituminized fiber, and fiberglass raceways.

2.6 WARNING TAPE

As specified in Section 16110 RACEWAYS.

2.7 SOURCE QUALITY CONTROL

Conductors 600-Volts and Below: Test in accordance with UL 44 and UL 854 Standards.

PART 3 EXECUTION

3.1 GENERAL

a. Conductor installation to be in accordance with NECA 1.

b. Conductor and cable sizing shown is based on copper conductors, unless noted otherwise.

c. Do not exceed cable manufacturer's recommendations for maximum pulling tensions and minimum bending radii.

d. Tighten screws and terminal bolts in accordance with UL 486A for copper conductors.

e. Cable Lugs: Provide with correct number of holes, bolt size, and center-to-center spacing as required by equipment terminals.

f. Bundling: Where single conductors and cables in handholes, vaults, cable trays, and other indicated locations are not wrapped together by some other means, bundle conductors from each conduit throughout their exposed length with cable ties placed at intervals not exceeding 18 inches on center.

g. Ream, remove burrs, and clear interior of installed conduit before pulling wires or cables.

h. Concrete-Encased Raceway Installation: Prior to installation of conductors, pull through each raceway a mandrel approximately 1/4 inch smaller than raceway inside diameter.

3.2 POWER CONDUCTOR COLOR CODING

3.2.1 Conductors 600 Volts and Below

a. No. 6 AWG and Larger: Apply general purpose, flame retardant tape at each end, and at accessible locations wrapped at least six full overlapping turns, covering an area 1-1/2 to 2 inches wide.

b. No. 8 AWG and Smaller: Provide colored conductors.

c. Colors: System Conductor Color All Systems Equipment Grounding Green 240/120 Volts Single-Phase, Three-Wire Grounded Neutral One Hot Leg Other Hot Leg White Black Red 208Y/120 Volts Three-Phase, Four-Wire Grounded Neutral Phase A Phase B Phase C White Black Red Blue 480Y/277 Volts Three-Phase, Four-Wire Grounded Neutral Phase A Phase B Phase C White Brown Orange Yellow NOTE: Phase A, B, C implies direction of positive phase rotation.

d. Tracer: Outer covering of white with an identifiable colored strip other than green in accordance with NFPA 70.

3.3 CIRCUIT IDENTIFICATION

3.3.1 Method

a. Conductors No. 3 AWG and Smaller: Identify with sleeves.

b. Cables, and Conductors No. 2 AWG and Larger:

(1) Identify with marker plates.
(2) Attach marker plates with nylon tie cord.

c. Taped-on markers or tags relying on adhesives not permitted.

3.3.2 Conductors Above 600 Volts

Apply general purpose, flame retardant tape at each end, and at accessible locations wrapped at least six full overlapping turns, covering an area 1-1/2 to 2 inches wide.

3.3.2.1 Colors

a. Grounded Neutral: White.

b. Phase A: Red.

c. Phase B: Yellow.

d. Phase C: Blue.

3.4 CONDUCTORS 600 VOLTS AND BELOW

a. Install 10 AWG or 12 AWG conductors for branch circuit power wiring in lighting and receptacle circuits.

b. Do not splice incoming service conductors and branch power distribution conductors No. 6 AWG and larger unless specifically indicated or approved by the Contracting Officer.

3.4.1 Connections and Terminations

a. Install nylon self-insulated crimp connectors and terminators for instrumentation and control, circuit conductors.

b. Install self-insulated, set screw wire connectors for two-way connection of power circuit conductors No. 12 AWG and smaller.

c. Install uninsulated crimp connectors and terminators for instrumentation, control, and power circuit conductors No. 4 AWG through No. 2/0 AWG.

d. Install uninsulated, bolted, two-way connectors and terminators for power circuit conductors No. 3/0 AWG and larger.

e. Install uninsulated terminators bolted together on motor circuit conductors No. 10 AWG and larger.

f. Tape insulate all uninsulated connections.

g. Place no more than one conductor in any single-barrel pressure connection.

h. Install crimp connectors with tools approved by connector manufacturer.

i. Install terminals and connectors acceptable for type of material used.

j. Compression Lugs:

1. Attach with a tool specifically designed for purpose.
2. Tool shall provide complete, controlled crimp and shall not release until crimp is complete.
3. Do not use plier type crimpers.
4. Do not use soldered mechanical joints.

3.4.2 Splices and Terminations

a. Indoors: Use general purpose, flame retardant tape.

b. Outdoors: Use flame retardant, cold- and weather-resistant tape.

c. Cap spare conductors and conduits with UL listed end caps.

3.4.3 Cabinets and Panels

a. Remove surplus wire, bridle and secure.

b. Where conductors pass through openings or over edges in sheet metal, remove burrs, chamfer edges, and install bushings and protective strips of insulating material to protect the conductors.

3.4.4 Control and Instrumentation Wiring

a. Where terminals provided will accept such lugs, terminate control and instrumentation wiring, except solid thermocouple leads, with insulated, locking-fork compression lugs.

b. Terminate with methods consistent with terminals provided, and in accordance with terminal manufacturer's instructions.

c. Locate splices in readily accessible cabinets or junction boxes using terminal strips.

d. Where connections of cables installed under this section are to be made under other sections leave pigtails of adequate length for bundled connections.

e. Cable Protection:

1. Install individual wires, pairs, or triads in flex conduit under the floor or grouped into bundles at least 1/2 inch in diameter.
2. Maintain integrity of shielding of instrumentation cables.
3. Ensure grounds do not occur because of damage to jacket over the shield.

3.4.5 Extra Conductor Length

For conductors to be connected by others, install minimum 6 feet of extra conductor in freestanding panels and minimum 2 feet in other assemblies.

3.5 FIELD QUALITY CONTROL

In accordance with Section 16950 ELECTRICAL TESTING.

-- End of Section --

SECTION TABLE OF CONTENTS

DIVISION 16 - ELECTRICAL

SECTION 16425

SWITCHBOARDS

PART 1 GENERAL

1.1 REFERENCES
1.2 SCOPE
1.3 SUBMITTALS
1.4 UL COMPLIANCE

PART 2 PRODUCTS

2.1 GENERAL
2.2 STATIONARY STRUCTURE
2.3 ENCLOSURE
2.3.1 Equipment Finish
2.3.2 Aisleless Outdoor Enclosure
2.3.3 Overall Dimensions
2.4 BUSWORK
2.5 PROTECTIVE DEVICES
2.5.1 Molded-Case Circuit Breakers
2.6 SOLID-STATE TRIP UNIT
2.6.1 Flux-shift trip and current sensors.
2.6.2 Protective Programmers
2.6.3 Phase Current Sensors
2.6.4 Portable Test Set
2.7 CONTROL WIRING
2.8 TERMINAL BLOCKS
2.9 POWER METER
2.10 IDENTIFICATION
2.10.1 Nameplates
2.10.1.1 Master
2.10.1.2 Circuit Breaker Cubicle and Door-Mounted Device
2.10.2 Section Identification
2.10.3 Cubicle Labels
2.10.4 Metering Instruments
2.10.5 Control Switches
2.10.6 Relays and Devices
2.10.7 Switchboard Sign
2.11 INSTALLATION, OPERATION AND MAINTENANCE MANUAL
2.12 FACTORY TESTIING

PART 3 EXECUTION

3.1 INSTALLATION
3.2 FIELD QUALITY CONTROL
3.3 MANUFACTURER'S SERVICES

-- End of Section Table of Contents --

SECTION 16425

SWITCHBOARDS

PART 1 GENERAL

1.1 REFERENCES

The publications listed below form a part of this specification to the extent referenced. The publications are referred to within the text by the basic designation only.

NATIONAL ELECTRICAL MANUFACTURERS ASSOCIATION (NEMA)

NEMA 250	(1997) Enclosures for Electrical Equipment (1000 Volts Maximum)
NEMA PB 2	(1995) Deadfront Distribution Switchboards

NATIONAL FIRE PROTECTION ASSOCIATION (NFPA)

NFPA 70	(2002) National Electrical Code

UNDERWRITERS LABORATORIES (UL)

UL 891	(1998) Dead-Front Switchboards
UL 1025	(1980; R 1990, Bul. 1991) Electric Air Heaters

1.2 SCOPE

a. This specification applies to Switchboards and Service Entrance Sections, as indicated.

b. Service entrance sections shall be provided in accordance with the requirements of local electrical utilities. Cost should include coordination with local electrical utilities and obtain their approvals.

1.3 SUBMITTALS

Government approval is required for submittals with a "G" designation; submittals not having a "G" designation are for information only or as otherwise designated. When used, a designation following the "G" designation identifies the office that will review the submittal for the Government. The following shall be submitted in accordance with Section 01330 SUBMITTAL PROCEDURES:

SD-02 Shop Drawings

Products; G, RE.

Provide descriptive product information; Itemized Bill of Material, Dimensional drawings, Operational description, Anchoring instructions and details, One-line, three-line, and control schematic drawings, Connection and interconnection drawings, Circuit Breakers: Copies of time-current characteristics, Ground Fault Protection: Relay time-current characteristics; Bus data, Incoming line section equipment data; Transformer section equipment data, Conduit entrance locations, power meter, and low voltage, secondary surge protective equipment.

SD-08 Manufacturer's Instructions

Manufacturer's installation instructions; G, RE.

SD-06 Test Reports

Certified Factory Test Report; G, RE.

SD-10 Operation and Maintenance Data

Operation and Maintenance Manual; G, RE.

SD-07 Certificates

Manufacturer's Certification of Proper Installation; G, RE.

1.4 UL COMPLIANCE

Products manufactured within scope of Underwriters Laboratories shall conform to UL Standards and have an applied UL Listing Mark.

PART 2 PRODUCTS

2.1 GENERAL

a. Equipment suitable for 480 volt, three-phase, four-wire grounded-wye electrical system, unless otherwise shown, having an available short-circuit current at line terminals of amperes rms symmetrical as shown.

b. Comply with NEMA PB 2 and UL 891.

c. Switchboard and/or service entrance section and all its major components to be manufactured and assembled by a single manufacturer in order to achieve standardization for appearance, operation and maintenance, spare parts replacement, and manufacturer's services.

d. Lifting lugs on all equipment and devices weighing over 100 pounds.

e. Operating Conditions:

1. Ambient Temperature: Maximum 45 degrees C.
2. Equipment shall be fully rated without derating for the above

operating conditions.

2.2 STATIONARY STRUCTURE

a. Type: NEMA PB 2 construction, dead front, completely metal enclosed, self-supporting.

b. Sections bolted together to form one rigid assembly capable of being moved into position and bolted directly to the floor without use of floor sills.

2.3 ENCLOSURE

2.3.1 Equipment Finish

a. Baked enamel applied over rust-inhibiting phosphated base coating.

b. Color:

1. Exterior: Manufacturer's standard.
2. Interior: White.
3. Unpainted Parts: Plated for corrosion resistance.

2.3.2 Aisleless Outdoor Enclosure

a. NEMA 250, Type 3R enclosing NEMA 250, Type 1, enclosed switchboard.

b. Front access, hinged, full-height doors with three-point latch operated by vault-type handle with multiple padlocking provisions for each front switchboard section.

c. Minimum 10 inch front access space between exterior door and front of interior switchboard doors.

d. Gasketed doors, end panels, and sloped roof having 4 inch minimum overhang on all sides.

e. Support assembly on 4 inch modular base.

f. Steel bottom enclosure and support assembly undercoated with a coal tar emulsion.

g. Ventilating louvers with filters in front door.

h. Space Heaters: Thermostatically controlled 250-watt, 120-volt, in each switchboard vertical section in accordance with UL 1025. Provide control power transformer, disconnecting means, and wiring internal to the switchboard, to provide power to space heater.

i. Adjustable thermostat for temperature range of 50 to 70 degrees F.

2.3.3 Overall Dimensions

The Complete switchboard assembly must fit in the space indicated. The

front and plan views shall be as indicated.

2.4 BUSWORK

a. Material: Phase insulated copper throughout entire length of sufficient cross section to limit temperature rise at rated current to 55 degrees C.

b. Bus Arrangement: A-B-C, left-to-right, top-to-bottom, and front-to-rear, as viewed from front.

c. Brace for short-circuit currents as shown.

d. Main Horizontal Bus: Nontapered, continuous current rating as shown.

e. Ground Bus:

1. Tin-plated copper.
2. Rating: 800 amperes.
3. Bolted to each vertical section.

f. Extend each bus entire length of switchboard with provisions for extension to future units.

2.5 PROTECTIVE DEVICES

2.5.1 Molded-Case Circuit Breakers

a. Main, and Branch Feeder Protective Devices: Group mounted, suitable for use with 75 degree C wire at full 75 degree C ampacity when mounted in switchboard.

b. Arrangement: 100% rated main and branch feeder 400 amperes and above.

c. Frame sizes: As shown provide solid state trip units per 250 amperes and above.

d. Interrupting Rating: Amperes rms symmetrical at rated voltage of 480V, as shown.

e. Mechanical interlock to prevent opening compartment door while breaker is in closed position.

f. Provide padlock provision where breaker is in OFF position.

2.6 SOLID-STATE TRIP UNIT

2.6.1 Flux-shift trip and current sensors.

2.6.2 Protective Programmers

a. Self-powered, automatic rms sensing micro-electronic processor.

b. No external relays or accessories.

c. Printed circuit cards with gold-plated contacts.

d. Programmable Controls:

1. Fixed-point, with repetitive accuracy and precise unit settings.
2. Trip adjustments made by nonremovable, discrete step switching.

e. Field-Installable Rating Plugs:

1. Long-time pickup LED indicator and test receptacle.
2. Matching load and cable requirements.
3. Interlocked with tripping mechanism.
4. Breaker to remain trip-free with plug removed.
5. Keyed rating plugs to prevent incorrect application.

f. Long-time pickup light.

g. Selective Coordination Time/Current Curve Shaping adjustable Functions:

1. Current setting.
2. Long-time pickup.
3. Long-time delay.
4. Instantaneous pickup with short-time for main and feeders.
5. Short-time pickup for main and feeders.
6. Short-time delay for main and feeders with I2T function, and IN-OUT switch.
7. Ground fault pickup.
8. Ground fault delay with I2T function.
9. High instantaneous pickup with short-time delay.

h. Fixed, instantaneous pickup for main feeders.

i. Fault Trip Indicators: Mechanical push-to-reset type for overload and short-circuit overload plus ground fault trip.

j. Rejection Pins: For each programmer frame size.

2.6.3 Phase Current Sensors

a. Single-ratio type.

b. Fixed, mounted on breaker frame.

c. Molded epoxy construction.

d. One toroidal type for each phase.

2.6.4 Portable Test Set

AC/DC static, full function unit for checking programmer's time-current characteristics of programmer.

2.7 CONTROL WIRING

a. Control, Instrumentation, and Power/Current Circuits: NFPA 70, Type SIS, single-conductor, Class B, stranded copper, rated 600 volts.

b. Transducer Output/Analog Circuits: Shielded cable rated 600 volts, 90 degrees C minimum.

c. Conductor Lugs: Preinsulated, self-locking, spade-type, with reinforced sleeves.

d. Identification: Individually, with permanent wire markers at each end.

e. Enclose in top and vertical steel wiring troughs, and front-to-rear in nonmetallic wiring troughs.

f. Splices: Not permitted in switchboard wiring.

2.8 TERMINAL BLOCKS

a. Enclosed in steel wiring troughs.

b. Rated 600 volts, 30 amperes minimum, one-piece barrier type with strap screws.

c. Shorting type for current transformer leads.

d. Provide terminal blocks for:

1. Conductors connecting to circuits external to switchboard.
2. Internal circuits crossing shipping splits.
3. Equipment parts requiring replacement and maintenance.

e. Spare Terminals: Not less than 20 percent.

f. Group terminal blocks for external circuit wiring leads.

g. Maintain 6 inch minimum space between columns of terminal blocks.

h. Identification: Permanent, for each terminal and columns of terminal blocks.

2.9 POWER METER

a. Solid-state device with LED displays.

b. Direct voltage input up to 600 volts AC.

c. Current input via current transformer with 5-ampere secondary.

d. Programmable current and potential transformer ratios.

e. Programmable limits to activate up to four alarms.

f. Selectable voltage measurements; line-to-line or line-to-neutral, and wye or delta.

g. Simultaneous Display:

1. Volts, three-phase.
2. Amperes, three-phase.
3. Kilowatts.
4. Kilowatthours.
5. Power factor.
6. Peak demand.

h. Voltage Rating: 600 volts, AC.

2.10 IDENTIFICATION

2.10.1 Nameplates

2.10.1.1 Master

a. Deep-etched aluminum, with manufacturer's name and model number.

b. Riveted to main vertical section.

2.10.1.2 Circuit Breaker Cubicle and Door-Mounted Device

a. Engraved, phenolic.

b. Color: White with black.

c. Characters: Block-type, 1/4 inch high.

d. Size: As required for three lines, with 15 characters each line.

e. Inscription: As shown on one-line diagram.

f. Blank plates for future spaces.

g. Attachment Screws: Stainless steel panhead.

2.10.2 Section Identification

a. Stamped metallic, riveted to each vertical section.

b. Serial number, bus rating, and section reference number.

c. Size: Manufacturer's standard.

2.10.3 Cubicle Labels

a. Nonmetallic, applied inside each cubicle compartment.

b. Device serial number, rating, and description.

2.10.4 Metering Instruments

Meter type identified on meter face below pointer or dial.

2.10.5 Control Switches

Deep etched, aluminum escutcheon plate.

2.10.6 Relays and Devices

a. Stamped metallic, riveted to instrument case.

b. Manufacturer's name, model number, relay type, and rating data.

2.10.7 Switchboard Sign

a. Sign on front.

b. Engraved, phenolic.

c. Size: Manufacturer's standard.

d. Color: Red with white.

e. Characters: Gothic-type, 1 inch high.

f. Inscription: DANGER/HIGH VOLTAGE/KEEP OUT.

g. Attachment: Four rivets each sign.

2.11 INSTALLATION, OPERATION AND MAINTENANCE MANUAL

Provide Manufacturer's Installation Instructions and Operation and Maintenance Manual.

2.12 FACTORY TESTIING

Perform performance tests in accordance with UL 891 and production tests in accordance with NEMA PB 2. Provide Certified Factory Test Report for the tests performed.

PART 3 EXECUTION

3.1 INSTALLATION

a. Install in accordance with manufacturer's instructions and recommendations.

b. Secure to mounting pads with anchor bolts of sufficient size and

number adequate for specified seismic conditions.

c. Install plumb and in longitudinal alignment with pad or wall.

d. Coordinate terminal connections with installation of secondary feeders.

3.2 FIELD QUALITY CONTROL

In accordance with Section 16950 ELECTRICAL TESTING.

3.3 MANUFACTURER'S SERVICES

a. Furnish manufacturer's representative the following services at jobsite, for minimum person-days listed below, travel time excluded:

1. 1 person-days for installation assistance, final adjustment, and initial energization of equipment.
2. 1/2 person-days for functional and performance testing.
3. 1/2 person-days for adjustment of relay settings.

b. Furnish Manufacturer's Certification of Proper Installation.

c. Furnish startup services and training of the Contracting Officer at such times as requested by Contracting Officer.

-- End of Section --

SECTION TABLE OF CONTENTS

DIVISION 16 - ELECTRICAL

SECTION 16450

GROUNDING

PART 1 GENERAL

1.1 REFERENCES
1.2 SUBMITTALS
1.3 UL COMPLIANCE

PART 2 PRODUCTS

2.1 GROUND RODS
2.2 GROUND CONDUCTORS
2.3 CONNECTORS
2.3.1 Exothermic Weld Connectors
2.3.2 Compression Connectors
2.3.3 Mechanical Connectors
2.4 GROUNDING WELLS

PART 3 EXECUTION

3.1 GENERAL
3.1.1 Shielded Control Cables
3.1.2 Instruments
3.2 WIRE CONNECTIONS
3.3 MOTOR GROUNDING
3.4 GROUND RODS
3.5 GROUNDING WELLS
3.6 CONNECTIONS
3.6.1 General
3.6.2 Exothermic Weld Type
3.6.3 Compression Type
3.6.4 Mechanical Type
3.7 HANDHOLE GROUNDING
3.8 TRANSFORMER GROUNDING
3.9 METAL STRUCTURE GROUNDING
3.10 SURGE PROTECTION EQUIPMENT GROUNDING
3.11 FIELD QUALITY CONTROL

-- End of Section Table of Contents --

SECTION 16450

GROUNDING

PART 1 GENERAL

1.1 REFERENCES

The publications listed below form a part of this specification to the extent referenced. The publications are referred to within the text by the basic designation only.

AMERICAN NATIONAL STANDARDS INSTITUTE (ANSI)

ANSI C2 (1997) National Electrical Safety Code

NATIONAL FIRE PROTECTION ASSOCIATION (NFPA)

NFPA 70 (2002) National Electrical Code

1.2 SUBMITTALS

Government approval is required for submittals with a "G" designation; submittals not having a "G" designation are for information only or as otherwise designated. When used, a designation following the "G" designation identifies the office that will review the submittal for the Government. The following shall be submitted in accordance with Section 01330 SUBMITTAL PROCEDURES:

SD-03 Product Data

Exothermic weld connectors; G, RE.
Mechanical connectors; G, RE.
Ground rods; G, RE.
Compression connectors; G, RE

1.3 UL COMPLIANCE

Materials manufactured within scope of Underwriters Laboratories shall conform to UL Standards and have an applied UL listing mark.

PART 2 PRODUCTS

2.1 GROUND RODS

a. Material: Copper-clad. Steel.

b. Diameter: Minimum 5/8 inch.

c. Length: 10 feet.

2.2 GROUND CONDUCTORS

As specified in Section 16120 CONDUCTORS.

2.3 CONNECTORS

2.3.1 Exothermic Weld Connectors

a. Outdoor Weld: Suitable for exposure to elements or direct burial.

b. Indoor Weld: Utilize low-smoke, low-emission process.

2.3.2 Compression Connectors

a. Compress-deforming type; wrought copper extrusion material.

b. Single indentation for conductors 6 AWG and smaller.

c. Double indentation with extended barrel for conductors 4 AWG and larger.

d. Barrels prefilled with oxide-inhibiting and antiseizing compound and sealed.

2.3.3 Mechanical Connectors

Split-bolt, saddle, or cone screw type; copper alloy material.

2.4 GROUNDING WELLS

Ground rod box complete with cast iron riser ring and traffic cover marked GROUND ROD.

PART 3 EXECUTION

3.1 GENERAL

a. Grounding shall be in compliance with NFPA 70 and ANSI C2.

b. Ground electrical service neutral at service entrance equipment to supplementary grounding electrodes.

c. Ground each separately derived system neutral to nearest effectively grounded building structural steel member or separate grounding electrode.

d. Bond together system neutrals, service equipment enclosures, exposed noncurrent-carrying metal parts of electrical equipment, metal raceways, ground conductor in raceways and cables, receptacle ground connections, and metal piping systems.

3.1.1 Shielded Control Cables

a. Ground shield to ground bus at power supply for analog signal.

b. Expose shield minimum 1 inch at termination to field instrument and apply heat shrink tube.

c. Do not ground control cable shield at more than one point.

3.1.2 Instruments

Provide instruments grounding with stranded copper wires to local ground rod near instrument for all outdoor instruments; ground instruments to nearest ground bus for all indoor instruments.

3.2 WIRE CONNECTIONS

a. Ground Conductors: Install in conduit containing power conductors and control circuits above 50 volts.

b. Nonmetallic Raceways and Flexible Tubing: Install equipment grounding conductor connected at both ends to noncurrent-carrying grounding bus.

c. Connect ground conductors to raceway grounding bushings.

d. Extend and connect ground conductors to ground bus in all equipment containing a ground bus.

e. Connect enclosure of equipment containing ground bus to that bus.

f. Bolt connections to equipment ground bus.

g. Bond grounding conductors to metallic enclosures at each end, and to intermediate metallic enclosures.

h. Junction Boxes: Furnish materials and connect to equipment grounding system with grounding clips mounted directly on box, or with 3/8 inch machine screws.

3.3 MOTOR GROUNDING

a. Extend equipment ground bus via grounding conductor installed in motor feeder raceway; connect to motor frame.

b. Nonmetallic Raceways and Flexible Tubing: Install an equipment grounding conductor connected at both ends to noncurrent-carrying grounding bus.

c. Motors Less Than 10 hp: Furnish compression, spade-type terminal connected to conduit box mounting screw.

d. Motors 10 hp and Above: Tap motor frame or equipment housing; furnish compression, one-hole, lug type terminal connected with minimum 5/16 inch brass threaded stud with bolt and washer.

e. Circuits 20 Amps or Above: Tap motor frame or equipment housing; install solderless terminal with minimum 5/16 inch diameter bolt.

3.4 GROUND RODS

a. Install full length with conductor connection at upper end.

b. Install with connection point below finished grade, unless otherwise shown.

3.5 GROUNDING WELLS

a. Install in the areas shown.

b. Install riser ring and cover flush with surface.

c. Place 9 inches crushed rock in bottom of each well.

3.6 CONNECTIONS

3.6.1 General

a. Abovegrade Connections: Install exothermic weld, mechanical, or compression-type connectors; or brazing.

b. Belowgrade Connections: Install exothermic weld or compression type connectors.

c. Remove paint, dirt, or other surface coverings at connection points to allow good metal-to-metal contact.

d. Notify Contracting Officer prior to backfilling ground connections.

3.6.2 Exothermic Weld Type

a. Wire brush or file contact point to bare metal surface.

b. Use welding cartridges and molds in accordance with manufacturer's recommendations.

c. Avoid using badly worn molds.

d. Mold to be completely filled with metal when making welds.

e. After completed welds have cooled, brush slag from weld area and thoroughly clean joint.

3.6.3 Compression Type

a. Install in accordance with connector manufacturer's recommendations.

b. Install connectors of proper size for grounding conductors and ground rods specified.

c. Install using connector manufacturer's compression tool having proper sized dies.

3.6.4 Mechanical Type

a. Apply homogeneous blend of colloidal copper and rust and corrosion inhibitor before making connection.

b. Install in accordance with connector manufacturer's recommendations.

c. Do not conceal mechanical connections.

3.7 HANDHOLE GROUNDING

a. Install one ground rod inside each.

b. Ground Rod Floor Protrusion: 4 to 6 inches above floor.

c. Make connections of grounding conductors fully visible and accessible.

d. Connect all noncurrent-carrying metal parts, and any metallic raceway grounding bushings to ground rod with No. 6 AWG copper conductor.

3.8 TRANSFORMER GROUNDING

Bond neutrals of transformers to system ground network, and to any additional indicated grounding electrodes.

3.9 METAL STRUCTURE GROUNDING

a. Ground metal sheathing and exposed metal vertical structural elements to grounding system.

b. Bond electrical equipment supported by metal platforms to the platforms.

c. Provide electrical contact between metal frames and railings supporting pushbutton stations, receptacles, and instrument cabinets, and raceways carrying circuits to these devices.

3.10 SURGE PROTECTION EQUIPMENT GROUNDING

Connect surge arrestor ground terminals to equipment ground bus.

3.11 FIELD QUALITY CONTROL

As specified in Section 16950, ELECTRICAL TESTING.

-- End of Section --

SECTION TABLE OF CONTENTS

DIVISION 16 - ELECTRICAL

SECTION 16520

EXTERIOR LIGHTING

PART 1 GENERAL

1.1 REFERENCES
1.2 DEFINITIONS
1.2.1 Average Life
1.2.2 Groundline Section
1.3 SUBMITTALS
1.4 QUALITY ASSURANCE
1.4.1 Drawing Requirements
1.4.1.1 Luminaire Drawings
1.4.1.2 Poles
1.4.2 Test Data for Luminaires
1.5 DELIVERY, STORAGE, AND HANDLING
1.5.1 Steel Poles

PART 2 PRODUCTS

2.1 LUMINAIRES
2.1.1 Lamps
2.1.1.1 Metal Halide (MH) Lamps
2.1.2 Ballasts for High-Intensity-Discharge (HID) Luminaires
2.2 POLES
2.2.1 Steel Poles
2.3 BRACKETS AND SUPPORTS
2.4 POLE FOUNDATIONS

PART 3 EXECUTION

3.1 INSTALLATION OF POLES
3.1.1 Steel
3.2 GROUNDING
3.3 FIELD QUALITY CONTROL

-- End of Section Table of Contents --

SECTION 16520

EXTERIOR LIGHTING

PART 1 GENERAL

1.1 REFERENCES

The publications listed below form a part of this specification to the extent referenced. The publications are referred to in the text by the basic designation only.

AMERICAN ASSOCIATION OF STATE HIGHWAY AND TRANSPORTATION OFFICIALS (AASHTO)

AASHTO LTS-3	(1994) Standard Specifications for Structural Supports for Highway Signs, Luminaires and Traffic Signals

AMERICAN NATIONAL STANDARDS INSTITUTE (ANSI)

ANSI C82.4	(2002) Ballasts for High-Intensity-Discharge and Low-Pressure Sodium Lamps (Multiple-Supply Type)
ANSI C136.14	(1988) Roadway Lighting Equipment - Enclosed Side-Mounted Luminaires for Horizontal-Burning High-Intensity-Discharge Lamps
ANSI C136.21	(1987; R 1997) Roadway Lighting - Vertical Tenons Used with Post-Top-Mounted Luminaires

ASTM INTERNATIONAL (ASTM)

ASTM A 123/A 123M	(2001a) Zinc (Hot-Dip Galvanized) Coatings on Iron and Steel Products
ASTM A 153/A 153M	(2001a) Zinc Coating (Hot-Dip) on Iron and Steel Hardware

ILLUMINATING ENGINEERING SOCIETY OF NORTH AMERICA (IESNA)

IES LHBK	(2000) Lighting Handbook

INSTITUTE OF ELECTRICAL AND ELECTRONICS ENGINEERS (IEEE)

IEEE C2	(2002) National Electrical Safety Code
IEEE C136.3	(1995) Roadway Lighting Equipment -

	Luminaire Attachments
IEEE C136.13	(1987; R 1997) Metal Brackets for Wood Poles

NATIONAL FIRE PROTECTION ASSOCIATION (NFPA)

NFPA 70	(2002) National Electrical Code

UNDERWRITERS LABORATORIES (UL)

UL 1029	(1994; Rev thru Feb 2001) High-Intensity-Discharge Lamp Ballasts
UL 1572	(1995 Rev thru Nov 1999) High Intensity Discharge Lighting Fixtures

1.2 DEFINITIONS

1.2.1 Average Life

Time after which 50 percent will have failed and 50 percent will have survived under normal conditions.

1.2.2 Groundline Section

That portion between one foot above and 2 feet below the groundline.

1.3 SUBMITTALS

Submit the following in accordance with Section 01330, "Submittal Procedures."

SD-02 Shop Drawings

Luminaire drawings; G, RE
Poles; G, RE

SD-03 Product Data

Luminaires; G, RE
Lamps; G, RE
Ballasts; G, RE
Steel poles; G, RE
Brackets

SD-04 Samples

Luminaires; G, RE

Submit one sample of each luminaire type, complete with lamp and ballast. Sample will be returned to the Contractor for installation in the project work.

SD-06 Test Reports

Test Data for luminaires; G, RE
Operating test

Submit operating test results as stated in paragraph entitled "Field Quality Control."

1.4 QUALITY ASSURANCE

1.4.1 Drawing Requirements

1.4.1.1 Luminaire Drawings

Include dimensions, effective projected area (EPA), accessories, and installation and construction details. Photometric data, including zonal lumen data, average and minimum ratio, aiming diagram, and computerized candlepower distribution data shall accompany shop drawings.

1.4.1.2 Poles

Include dimensions, wind load determined in accordance with AASHTO LTS-3, pole deflection, pole class, and other applicable information.

1.4.2 Test Data for Luminaires

a. Distribution data according to IES classification type as defined in IES LHBK.

b. Computerized horizontal illumination levels in footcandles at ground level, taken every 20 feet. Include average maintained footcandle level and maximum and minimum ratio.

1.5 DELIVERY, STORAGE, AND HANDLING

1.5.1 Steel Poles

Do not store poles on ground. Support poles so they are at least one foot above ground level and growing vegetation. Do not remove factory-applied pole wrappings until just before installing pole.

PART 2 PRODUCTS

2.1 LUMINAIRES

ANSI C136.14 or UL 1572. Provide luminaires as indicated. Provide luminaires complete with lamps of number, type, and wattage indicated. Details, shapes, and dimensions are indicative of the general type desired, but are not intended to restrict selection to luminaires of a particular manufacturer. Luminaires of similar designs, light distribution and brightness characteristics, and of equal finish and quality will be acceptable as approved.

2.1.1 Lamps

2.1.1.1 Metal Halide (MH) Lamps

MH lamps shall have average rated life of 16,000 hours (minimum) for 35 watt lamps and 24,000 hours (minimum) for all higher wattage lamps. 150 watt lamps, if required, shall be 55 volt lamps.

2.1.2 Ballasts for High-Intensity-Discharge (HID) Luminaires

UL 1029 and ANSI C82.4, and shall be constant wattage autotransformer (CWA) or regulator, high power-factor type unless otherwise indicated. Provide single-lamp ballasts which shall have a minimum starting temperature of minus 30 degrees C. Ballasts shall be:

a. Designed to operate on voltage system to which they are connected.

b. Constructed so that open circuit operation will not reduce the average life.

MH ballasts shall have a solid-state igniter/starter with an average life in the pulsing mode of 3500 hours at the intended ambient temperature. Igniter case temperature shall not exceed 90 degrees C.

2.2 POLES

Provide poles designed for wind loading of 70 miles per hour determined in accordance with AASHTO LTS-3 while supporting luminaires having effective projected areas indicated. Poles shall have oval-shaped handhole having a minimum clear opening of 2.5 by 5 inches. Handhole cover shall be secured by stainless steel captive screws.

2.2.1 Steel Poles

AASHTO LTS-3. Provide steel poles having minimum 11-gage steel with minimum yield/strength of 48,000 psi and hot-dipped galvanized in accordance with ASTM A 123/A 123M iron-oxide primed factory finish. Provide a pole grounding connection designed to prevent electrolysis when used with copper ground wire. Base covers for steel poles shall be structural quality hot-rolled carbon steel plate having a minimum yield of 36,000 psi.

2.3 BRACKETS AND SUPPORTS

IEEE C136.3, IEEE C136.13, and ANSI C136.21, as applicable. Pole brackets shall be not less than 1-1/4 inch galvanized steel pipe secured to pole. Slip-fitter or pipe-threaded brackets may be used, but brackets shall be coordinated to luminaires provided, and brackets for use with one type of luminaire shall be identical. Brackets for pole-mounted street lights shall correctly position luminaire no lower than mounting height indicated. Mount brackets not less than 24 feet above street. Special mountings or brackets shall be as indicated and shall be of metal which will not promote galvanic reaction with luminaire head.

2.4 POLE FOUNDATIONS

Anchor bolts shall be steel rod having a minimum yield strength of 50,000 psi; the top 12 inches of the rod shall be galvanized in accordance with ASTM A 153/A 153M.

PART 3 EXECUTION

3.1 INSTALLATION OF POLES

IEEE C2, NFPA 70, and to the requirements specified herein.

3.1.1 Steel

Provide pole foundations with galvanized steel anchor bolts, threaded at the top end and bent 90 degrees at the bottom end. Provide galvanized nuts, washers, and ornamental covers for anchor bolts. Concrete for anchor bases, polyvinyl chloride (PVC) conduit ells, and ground rods shall be as specified in Section 16450 GROUNDING. Thoroughly compact backfill with compacting arranged to prevent pressure between conductor, jacket, or sheath and the end of conduit ell. Adjust poles as necessary to provide a permanent vertical position with the bracket arm in proper position for luminaire location. After installation, paint exposed surfaces of steel poles with two finish coats of galvanizing patch.

3.2 GROUNDING

Ground noncurrent-carrying parts of equipment including metal poles, luminaires, mounting arms, brackets, and metallic enclosures. Where copper grounding conductor is connected to a metal other than copper, provide specially treated or lined connectors suitable for this purpose.

3.3 FIELD QUALITY CONTROL

Upon completion of installation, conduct an operating test to show that the equipment operates in accordance with the requirements of this section.

-- End of Section --

SECTION TABLE OF CONTENTS

DIVISION 16 - ELECTRICAL

SECTION 16950

ELECTRICAL TESTING

PART 1 GENERAL

1.1 REFERENCES
1.2 SUBMITTALS
1.3 TESTING
1.3.1 Test Firm Qualifications
1.3.2 Accuracy
1.3.3 Calibration
1.4 SEQUENCING AND SCHEDULING
1.4.1 Preconstruction Submittals
1.4.2 Test Reports
1.4.3 Certificates
1.4.4 Operation and Maintenance Data

PART 2 PRODUCTS (NOT APPLICABLE)

PART 3 EXECUTION

3.1 GENERAL
3.2 SWITCHBOARD ASSEMBLIES
3.2.1 Visual and Mechanical Inspection
3.2.2 Electrical Tests
3.2.2.1 Insulation Resistance Tests
3.2.2.2 Overpotential Tests
3.2.2.3 Current Injection Tests
3.2.2.4 Control Wiring
3.2.2.5 Operational Test
3.3 DRY TYPE TRANSFORMERS
3.3.1 Visual and Mechanical Inspection
3.3.2 Electrical Tests
3.4 LOW VOLTAGE CABLES, 600 VOLTS MAXIMUM
3.4.1 Visual and Mechanical Inspection
3.4.1.1 Exposed Power Cable No. 6 and Larger
3.4.1.2 Mechanical Connections
3.4.1.3 Shielded Instrumentation Cables
3.4.1.4 Control Cables
3.4.1.5 Cables Terminated Through Window Type CTs
3.4.2 Electrical Tests for Conductors No. 6 and Larger
3.5 SAFETY SWITCHES, 600 VOLTS MAXIMUM
3.5.1 Visual and Mechanical Inspection
3.5.2 Electrical Tests
3.5.2.1 Insulation Resistance Tests
3.5.2.2 Contact Resistance Tests
3.6 MOLDED AND INSULATED CASE CIRCUIT BREAKERS

3.6.1 General
3.6.2 Visual and Mechanical Inspection
3.6.3 Electrical Tests
3.6.3.1 Insulation Resistance Tests
3.6.3.2 Contact Resistance Test
3.6.3.3 Primary current injection test
3.7 LOW VOLTAGE POWER CIRCUIT BREAKERS
3.7.1 Visual and Mechanical Inspection
3.7.2 Electrical Tests
3.7.2.1 Insulation Resistance Tests
3.7.2.2 Contact Resistance Tests
3.7.2.3 Primary Current Injection Test
3.8 INSTRUMENT TRANSFORMERS
3.8.1 Visual and Mechanical Inspection
3.8.2 Electrical Tests
3.8.2.1 Current Transformer Tests
3.8.2.2 Potential Transformer Tests
3.9 METERING
3.9.1 Visual and Mechanical Inspection
3.10 GROUNDING SYSTEMS
3.10.1 Visual and Mechanical Inspection
3.10.2 Electrical Tests
3.10.2.1 Fall-of-Potential Test
3.10.2.2 Two-point Direct Method Test
3.11 AC INDUCTION MOTORS
3.11.1 General
3.11.2 Visual and Mechanical Inspection
3.11.3 Electrical Tests
3.12 LOW VOLTAGE MOTOR CONTROL
3.12.1 Visual and Mechanical Inspection
3.12.2 Electrical Tests
3.13 LOW VOLTAGE SURGE ARRESTORS
3.13.1 Visual and Mechanical Inspection
3.13.2 Electrical Tests
3.13.2.1 Varistor Type Arrestors

-- End of Section Table of Contents --

SECTION 16950

ELECTRICAL TESTING

PART 1 GENERAL

1.1 REFERENCES

The publications listed below form a part of this specification to the extent referenced. The publications are referred to in the text by basic designation only.

AMERICAN NATIONAL STANDARDS INSTITUTE (ANSI)

ANSI C2	(1997) National Electrical Safety Code

INSTITUTE OF ELECTRICAL AND ELECTRONICS ENGINEERS (IEEE)

IEEE 0081P	(1983) Guide for Measuring Earth Resistivity, Ground Impedance, and Earth Surface Potentials of a Ground System Part I: Normal Measurement
IEEE 43	(2000) Recommended Practice for Testing Insulation Resistance of Rotating Machinery
IEEE 118	(1978) Standard Test Code for Resistance Measurement
IEEE C37.20.1	(2002) Metal-Enclosed Low-Voltage Power Circuit Breaker Switchgear
IEEE C62.33	(1982) Standard Test Specifications for Varistor Surge-Protective Devices

NATIONAL ELECTRICAL MANUFACTURERS ASSOCIATION (NEMA)

NEMA AB 4	(2001) Guideline for Inspection and Preventive Maintenance of Molded Case Circuit Breakers Used in Commercial and Industrial Applications

INTERNATIONAL ELECTRICAL TESTING ASSOCIATION (NETA)

NETA ATS	(1999) Acceptance Testing Specifications for Electrical Power Distribution Equipment and Systems

NATIONAL FIRE PROTECTION ASSOCIATION (NFPA)

NFPA 70	(2002) National Electrical Code

NFPA 70E	(2000) Standard for Electrical Safety Requirements for Employee Workplaces

U.S. NATIONAL ARCHIVES AND RECORDS ADMINISTRATION (NARA)

29 CFR 1910.7	Definition and Requirements for a Nationally Recognized Testing Laboratory

1.2 SUBMITTALS

Government approval is required for submittals with a "G" designation; submittals not having a "G" designation are for information only. When used, a designation following the "G" designation identifies the office that will review the submittal for the Government. The following shall be submitted in accordance with Section 01330 SUBMITTAL PROCEDURES:

SD-01 Preconstruction Submittals

Schedule for performing inspection and tests; G, RE
List of references to be used for each test; G, RE
Sample copy of equipment and materials inspection form(s); G, RE
Sample copy of individual device test form; G, RE
Sample copy of individual system test form; G, RE

Submit 30 days prior to performing inspections or tests.

SD-06 Test Reports

Test or inspection reports for each electrical item tested; G, RE

Submit within 30 days after completion of test.

SD-07 Certificates

Certificates for each electrical item tested; G, RE

Submit within 30 days after completion of testing and acceptance.

SD-10 Operation and Maintenance Data

Operation and Maintenance Manual; G, RE

After test or inspection reports and certificates have been reviewed by Contracting Officer and returned, insert a copy of each in operation and maintenance manual.

1.3 TESTING

1.3.1 Test Firm Qualifications

a. Corporately and financially independent organization functioning as an unbiased testing authority.

b. Professionally independent of manufacturers, suppliers, and installers, of electrical equipment and systems being tested.

c. Employer of engineers and technicians regularly engaged in testing and inspecting of electrical equipment, installations, and systems.

d. Supervising Engineer accredited as Certified Electrical Test Technologist by National Institute for Certification of Engineering Technologists (NICET), or International Electrical Testing Association and having a minimum of 5 years testing experience on similar projects.

e. Technicians certified by NICET or NETA.

f. Assistants and apprentices assigned to project at ratio not to exceed two certified to one non-certified assistant or apprentice.

g. Registered Professional Engineer to provide comprehensive project report outlining services performed, results of such services, recommendations, actions taken, and opinions.

h. In compliance with 29 CFR 1910.7 criteria for accreditation of testing laboratories or a full Member Company of International Electrical Testing Association.

1.3.2 Accuracy

Test equipment shall have an operating accuracy equal to, or greater than, requirements established by NETA ATS.

1.3.3 Calibration

Test instrument calibration shall be in accordance with NETA ATS.

1.4 SEQUENCING AND SCHEDULING

a. Perform inspection and electrical tests after equipment has been installed.

b. Perform tests with apparatus de-energized whenever feasible.

c. Inspection and electrical tests on energized equipment are to be:

1. Scheduled with the Contracting Officer prior to de-energization.
2. Minimized to avoid extended period of interruption to the operating plant equipment.

d. Notify Contracting Officer at least 24 hours prior to performing tests on energized electrical equipment.

1.4.1 Preconstruction Submittals

Submit the following 30 days prior to testing:

a. Schedule for performing inspection and tests

b. List of references to be used for each test

c. Sample copy of equipment and materials inspection form(s)

d. Sample copy of individual device test form

e. Sample copy of individual system test form

1.4.2 Test Reports

Submit test or inspection reports for each electrical item tested

1.4.3 Certificates

Submit within 30 days after completion of testing and acceptance Certificates for each electrical item tested

1.4.4 Operation and Maintenance Data

After test or inspection reports and certificates have been reviewed by Contracting Officer and returned, insert a copy of each in Operation and Maintenance Manual.

PART 2 PRODUCTS (NOT APPLICABLE)

PART 3 EXECUTION

3.1 GENERAL

a. Tests specified in this section are to be performed and verified by the on-site CQC Manager or representative.

b. Tests and inspection shall establish that:

1. Electrical equipment is operational within industry and manufacturer's tolerances.
2. Installation operates properly.
3. Equipment is suitable for energization.
4. Installation conforms to requirements of these specifications and NFPA 70, NFPA 70E, and ANSI C2.

c. Perform inspection and testing in accordance with NETA ATS, industry standards, and manufacturer's recommendations.

d. Set, test and calibrate circuit breakers, fuses and other applicable devices in accordance with values established by the short circuit and coordination study.

e. Adjust mechanisms and moving parts for free mechanical movement.

f. Adjust adjustable relays and sensors to correspond to operating

conditions, or as recommended by manufacturer.

g. Verify nameplate data for conformance to Contract Documents.

h. Realign equipment not properly aligned and correct unlevelness.

i. Properly anchor electrical equipment found to be inadequately anchored.

j. Tighten accessible bolted connections, including wiring connections, with calibrated torque wrench to manufacturer's recommendations, or as otherwise specified.

k. Clean contaminated surfaces with cleaning solvents as recommended by manufacturer.

l. Provide proper lubrication of applicable moving parts.

m. Inform Contracting Officer of working clearances not in accordance with NFPA 70.

n. Investigate and repair or replace:

1. Electrical items that fail tests.
2. Active components not operating in accordance with manufacturer's instructions.
3. Damaged electrical equipment.

o. Electrical enclosures:

1. Remove foreign material and moisture from enclosure interior.
2. Vacuum and wipe clean enclosure interior.
3. Remove corrosion found on metal surfaces.
4. Repair or replace, as determined by Contracting Officer, door and panel sections having dented surfaces.
5. Repair or replace, as determined by Contracting Officer, poor fitting doors and panel sections.
6. Repair or replace improperly operating latching, locking, or interlocking devices.
7. Replace missing or damaged hardware.
8. Finish:
   a) Provide matching paint and touch up scratches and mars.
   b) If required due to extensive damage, as determined by Contracting Officer, refinish the entire assembly.

p. Replace fuses and circuit breakers that do not conform to size and type required by the Contract Documents.

3.2 SWITCHBOARD ASSEMBLIES

3.2.1 Visual and Mechanical Inspection

a. Insulator damage and contaminated surfaces.

b. Proper barrier and shutter installation and operation.

c. Proper operation of indicating devices.

d. Improper blockage of air cooling passages.

e. Proper operation of drawout elements.

f. Integrity and contamination of bus insulation system.

g. Check Door and Device Interlocking System By:

1. Closure attempt of device when door is in OFF or OPEN position.
2. Opening attempt of door when device is in ON or CLOSED position.

h. Check Nameplates for Proper Identification of:

1. Equipment title and tag number with latest one-line diagram.
2. Pushbutton.
3. Control switch.
4. Pilot light.
5. Control relay.
6. Circuit breaker.
7. Indicating meter.

i. Verify that fuse and circuit breaker ratings, sizes, and types conform to those specified.

j. Check bus and cable connections for high resistance by low resistance ohmmeter applied to bolted joints.

k. Ohmic value to be zero.

l. Check Operation and Sequencing of Electrical and Mechanical Interlock Systems By:

1. Closure attempt for locked open devices.
2. Opening attempt for locked closed devices.
3. Key exchange to operate devices in OFF-NORMAL positions.

m. Verify performance of each control device and feature.

n. Control Wiring:

1. Compare wiring to local and remote control and protective devices with elementary diagrams.
2. Proper conductor lacing and bundling.
3. Proper conductor identification.
4. Proper conductor logs and connections.

o. Exercise active components.

p. Perform phasing check on double-ended equipment to ensure proper

bus phasing from each source.

3.2.2 Electrical Tests

3.2.2.1 Insulation Resistance Tests

a. Applied megohmmeter DC voltage in accordance with NETA ATS, Table 10.1.

b. Each phase of each bus section.

c. Phase-to-phase and phase-to-ground for 1 minute.

d. With switches and breakers open.

e. With switches and breakers closed.

f. Control wiring except that connected to solid state components.

g. Insulation resistance values equal to, or greater than, ohmic values established by manufacturer.

3.2.2.2 Overpotential Tests

a. Applied AC or DC voltage and test procedure in accordance with IEEE C37.20.1.

b. Each phase of each bus section.

c. Phase-to-phase and phase-to-ground for 1 minute.

d. Test results evaluated on a pass/fail basis.

3.2.2.3 Current Injection Tests

a. For entire current circuit in each section.

b. Secondary injection for current flow of 1 ampere.

c. Test current at each device.

3.2.2.4 Control Wiring

a. Apply secondary voltage to control power and potential circuits.

b. Check voltage levels at each point on terminal boards and each device terminal.

3.2.2.5 Operational Test

b. Initiate control devices.

a. Check proper operation of control system in each section.

3.3 DRY TYPE TRANSFORMERS

3.3.1 Visual and Mechanical Inspection

a. Physical and insulator damage.

b. Proper winding connections.

c. Bolt torque level in accordance with NETA ATS, Table 10.12, unless otherwise specified by manufacturer.

d. Defective wiring.

e. Proper operation of fans, indicators, and auxiliary devices.

f. Removal of shipping brackets, fixtures, or bracing.

g. Free and properly installed resilient mounts.

h. Cleanliness and improper blockage of ventilation passages.

i. Verify that tap-changer is set at correct ratio for rated output voltage under normal operating conditions.

j. Verify proper secondary voltage phase-to-phase and phase-to-ground after energization and prior to loading.

3.3.2 Electrical Tests

a. Insulation resistance tests:

1. Applied megohmmeter DC voltage in accordance with NETA ATS, Table 10.5 for each:
   a) Winding-to-winding.
   b) Winding-to-ground.
2. 10-minute test duration with resistances tabulated at 30 seconds, 1 minute, and 10 minutes.
3. Results temperature corrected in accordance with NETA ATS, Table 10.14.
4. Temperature corrected insulation resistance values equal to, or greater than, ohmic values established by manufacturer.
5. Insulation resistance test results to compare within 1 percent of adjacent windings.

b. Perform tests and adjustments for fans, controls, and alarm functions as suggested by manufacturer.

3.4 LOW VOLTAGE CABLES, 600 VOLTS MAXIMUM

3.4.1 Visual and Mechanical Inspection

3.4.1.1 Exposed Power Cable No. 6 and Larger

a. Inspect each individual exposed power cable no. 6 and larger for:

1. Physical damage.
2. Proper connections in accordance with single-line diagram.
3. Cable bends not in conformance with manufacturer's minimum allowable bending radius where applicable.
4. Color coding conformance with specifications.
5. Proper circuit identification.

3.4.1.2 Mechanical Connections

a. Inspect Mechanical Connections for:

1. Proper lug type for conductor material.
2. Proper lug installation.
3. Bolt torque level in accordance with NETA ATS, Table 10.12, unless otherwise specified by manufacturer.

3.4.1.3 Shielded Instrumentation Cables

a. Inspect Shielded Instrumentation Cables for:

1. Proper shield grounding.
2. Proper terminations.
3. Proper circuit identification.

3.4.1.4 Control Cables

a. Inspect Control Cables for:

1. Proper termination.
2. Proper circuit identification.

3.4.1.5 Cables Terminated Through Window Type CTs

a. Inspect Cables Terminated Through Window Type CTs:

1. Verify that neutrals and grounds are terminated for correct operation of protective devices.

3.4.2 Electrical Tests for Conductors No. 6 and Larger

a. Insulation resistance tests:

1. Utilize 1,000-volt DC megohmmeter for 600 volt insulated conductors.
2. Test each conductor with respect to ground and to adjacent conductors per IEEE 118 procedures for 1 minute.
3. Evaluate ohmic values by comparison with conductors of same length and type.
4. Investigate values less than 50 megohms.

b. Continuity test by ohmmeter method to ensure proper cable connections.

3.5 SAFETY SWITCHES, 600 VOLTS MAXIMUM

3.5.1 Visual and Mechanical Inspection

a. Proper blade pressure and alignment.

b. Proper operation of switch operating handle.

c. Adequate mechanical support for each fuse.

d. Proper contact-to-contact tightness between fuse clip and fuse.

e. Cable connection bolt torque level in accordance with NETA ATS, Table 10.12.

f. Proper phase barrier material and installation.

g. Verify that fuse sizes and types correspond to one-line diagram.

h. Perform mechanical operational test and verify electrical and mechanical interlocking system operation and sequencing.

3.5.2 Electrical Tests

3.5.2.1 Insulation Resistance Tests

a. Applied megohmmeter DC voltage in accordance with NETA ATS, Table 10.1.

b. Phase-to-phase and phase-to-ground for 1 minute on each pole.

c. Insulation resistance values equal to, or greater than, ohmic values established by manufacturer.

3.5.2.2 Contact Resistance Tests

a. Contact resistance in microhms across each switch blade and fuse holder.

b. Investigate deviation of 50 percent or more from adjacent poles or similar switches.

3.6 MOLDED AND INSULATED CASE CIRCUIT BREAKERS

3.6.1 General

Inspection and testing limited to circuit breakers rated 100 amperes and larger and to motor circuit protector breakers rated 100 amperes and larger.

3.6.2 Visual and Mechanical Inspection

a. Proper mounting.

b. Proper conductor size.

c. Feeder designation according to nameplate and one-line diagram.

d. Cracked casings.

e. Connection bolt torque level in accordance with NETA ATS, Table 10.12.

f. Operate breaker to verify smooth operation.

g. Compare frame size and trip setting with circuit breaker schedules or one-line diagram.

h. Verify that terminals are suitable for 75 degrees C rated insulated conductors.

3.6.3 Electrical Tests

3.6.3.1 Insulation Resistance Tests

a. Utilize 1,000-volt DC megohmmeter for 480 and 600 volt circuit breakers and 500 volt DC megohmmeter for 240 volt circuit breakers.

b. Pole-to-pole and pole-to-ground with breaker contacts opened for 1 minute.

c. Pole-to-pole and pole-to-ground with breaker contacts closed for 1 minute.

d. Test values to comply with NETA ATS, Table 10.7.

3.6.3.2 Contact Resistance Test

a. Contact resistance in microhms across each pole.

b. Investigate deviation of 50 percent or more from adjacent poles and similar breakers.

3.6.3.3 Primary current injection test

a. Long-time minimum pickup and delay.

b. Short-time pickup and delay.

c. Ground fault pickup and delay.

d. Instantaneous pickup by run-up or pulse method.

e. Trip characteristics of adjustable trip breakers shall be within manufacturer's published time-current characteristic tolerance band, including adjustment factors.

f. Trip times shall be within limits established by NEMA AB 4, Table 5-3.

g. Instantaneous pickup value shall be within values established by NEMA AB 4, Table 5-4.

3.7 LOW VOLTAGE POWER CIRCUIT BREAKERS

3.7.1 Visual and Mechanical Inspection

a. Proper mounting, cell fit, and element alignment.

b. Proper operation of racking interlocks.

c. Check for damaged arc chutes.

d. Proper contact condition.

e. Bolt torque level in accordance with NETA ATS, Table 10.12.

f. Perform mechanical operational and contact alignment tests in accordance with manufacturer's instructions.

g. Check operation of closing and tripping functions of trip devices by activating ground fault relays, undervoltage shunt relays, and other auxiliary protective devices.

h. Verify primary and secondary contact wipe, gap setting, and other dimensions vital to breaker operation are correct.

i. Check charging motor, motor brushes, associated mechanism, and limit switches for proper operation and condition.

j. Check operation of electrically operated breakers in accordance with manufacturer's instructions.

k. Check for adequate lubrication on contact, moving, and sliding surfaces.

3.7.2 Electrical Tests

3.7.2.1 Insulation Resistance Tests

a. Utilize 1,000-volt DC megohmmeter for 480- and 600-volt circuit breakers.

b. Pole-to-pole and pole-to-ground with breaker contacts opened for 1 minute.

c. Pole-to-pole and pole-to-ground with breaker contacts closed for 1 minute.

d. Test values to comply with NETA ATS, Table 10.7 and 10.8.

3.7.2.2 Contact Resistance Tests

a. Contact resistance in microhms across each pole.

b. Investigate deviation of 50 percent or more from adjacent poles and similar breakers.

3.7.2.3 Primary Current Injection Test

a. Long-time minimum pickup and delay.

b. Short-time pickup and delay.

c. Ground fault pickup and delay.

d. Instantaneous pickup by run-up or pulse method.

e. Trip characteristic when adjusted to setting sheet parameters shall be within manufacturer's published time-current tolerance band.

3.8 INSTRUMENT TRANSFORMERS

3.8.1 Visual and Mechanical Inspection

a. Visually check current, potential, and control transformers for:

1. Cracked insulation.
2. Broken leads or defective wiring.
3. Proper connections.
4. Adequate clearances between primary and secondary circuit wiring.

b. Verify mechanically that:

1. Grounding and shorting connections have good contact.
2. Withdrawal mechanism and grounding operation, when applicable, operate properly.

c. Verify proper primary and secondary fuse sizes for potential transformers.

3.8.2 Electrical Tests

3.8.2.1 Current Transformer Tests

a. Insulation resistance test of transformer and wiring-to-ground at 1,000 volts DC for 30 seconds.

b. Polarity test.

3.8.2.2 Potential Transformer Tests

a. Insulation resistance test at test voltages in accordance with NETA ATS, Table 10.9 for 1 minute on:

1. Winding-to-winding.
2. Winding-to-ground.

b. Polarity test to verify polarity marks or H1-X1 relationship as applicable.

Insulation resistance measurement on instrument transformer shall not be less than that shown in NETA ATS, Table 10.9.

3.9 METERING

3.9.1 Visual and Mechanical Inspection

a. Verify meter connections in accordance with appropriate diagrams.

b. Verify meter multipliers.

c. Verify that meter types and scales conform to Contract Documents.

d. Check calibration of meters at cardinal points.

e. Check calibration of electrical transducers.

3.10 GROUNDING SYSTEMS

3.10.1 Visual and Mechanical Inspection

a. Equipment and circuit grounds in motor control center, panelboard, and switchboard, assemblies for proper connection and tightness.

b. Ground bus connections in motor control center, panelboard, and switchboard, assemblies for proper termination and tightness.

c. Effective transformer core and equipment grounding.

d. Accessible connections to grounding electrodes for proper fit and tightness.

e. Accessible exothermic-weld grounding connections to verify that molds were fully filled and proper bonding was obtained.

3.10.2 Electrical Tests

3.10.2.1 Fall-of-Potential Test

a. In accordance with IEEE 0081P, Section 8.2.1.5 for measurement of main ground system's resistance.

b. Main ground electrode system resistance to ground to be no greater than 5 ohms.

3.10.2.2 Two-point Direct Method Test

a. In accordance with IEEE 0081P, Section 8.2.1.1 for measurement of

ground resistance between main ground system, equipment frames, and system neutral and derived neutral points.

b. Equipment ground resistance shall not exceed main ground system resistance by 0.50 ohm.

3.11 AC INDUCTION MOTORS

3.11.1 General

Inspection and testing to motors.

3.11.2 Visual and Mechanical Inspection

a. Proper electrical and grounding connections.

b. Shaft alignment.

c. Blockage of ventilating air passageways.

d. Operate Motor and Check For:

1. Excessive mechanical and electrical noise.
2. Overheating.
3. Correct rotation.
4. Check vibration detectors, resistance temperature detectors, or motor inherent protectors for functionability and proper operation.
5. Excessive vibration.

e. Check operation of space heaters.

3.11.3 Electrical Tests

a. Insulation resistance tests:

1. In accordance with IEEE 43 at test voltages established by NETA ATS, Table 10.1 for:
   a) Motors above 200 hp for 10-minute duration with resistances tabulated at 30 seconds, 1 minute, and 10 minutes.
   b) Motors 200 hp and less for 1-minute duration with resistances tabulated at 30 and 60 seconds.
2. Insulation resistance values equal to, or greater than, ohmic values established by manufacturers.

b. Calculate polarization index ratios for motors above 200 hp. Investigate index ratios less than 1.5 for Class A insulation and 2.0 for Class B insulation.

c. Insulation resistance test on insulated bearings in accordance with manufacturer's instructions.

d. Measure running current and voltage, and evaluate relative to load conditions and nameplate full-load amperes.

3.12 LOW VOLTAGE MOTOR CONTROL

3.12.1 Visual and Mechanical Inspection

a. Proper barrier and shutter installation and operation.

b. Proper operation of indicating and monitoring devices.

c. Proper overload protection for each motor.

d. Improper blockage of air cooling passages.

e. Proper operation of drawout elements.

f. Integrity and contamination of bus insulation system.

g. Check Door and Device Interlocking System By:

   1. Closure attempt of device when door is in OFF or OPEN position.
   2. Opening attempt of door when device is in ON or CLOSED position.

h. Check nameplates for proper identification of:

   1. Equipment title and tag number with latest one-line diagram.
   2. Pushbuttons.
   3. Control switches.
   4. Pilot lights.
   5. Control relays.
   6. Circuit breakers.
   7. Indicating meters.

i. Verify that fuse and circuit breaker sizes and types conform to Contract Documents.

j. Verify that current and potential transformer ratios conform to Contract Documents.

k. Check Bus Connections for High Resistance by Low Resistance Ohmmeter.

   1. Ohmic value to be zero.

l. Check Operation and Sequencing of Electrical and Mechanical Interlock Systems By:

   1. Closure attempt for locked open devices.
   2. Opening attempt for locked closed devices.

m. Verify performance of each control device and feature furnished as part of the motor control center.

n. Control Wiring:

1. Compare wiring to local and remote control, and protective devices with elementary diagrams.
2. Check for proper conductor lacing and bundling.
3. Check for proper conductor identification.
4. Check for proper conductor lugs and connections.

o. Exercise active components.

p. Inspect Contactors For:

1. Correct mechanical operations.
2. Correct contact gap, wipe, alignment, and pressure.
3. Correct torque of all connections.

q. Compare overload heater rating with full-load current for proper size.

r. Compare fuse motor protector and circuit breaker with motor characteristics and power factor correction capacitors for proper size.

s. Perform phasing check on double-ended motor control centers to ensure proper bus phasing from each source.

3.12.2 Electrical Tests

a. Insulation resistance tests:

1. Applied megohmmeter DC voltage in accordance with NETA ATS, Table 10.1.
2. Bus section phase-to-phase and phase-to-ground for 1 minute on each phase.
3. Contactor phase-to-ground and across open contacts for 1 minute on each phase.
4. Starter section phase-to-phase and phase-to-ground on each phase with starter contacts closed and protective devices open.
5. Test values to comply with NETA ATS, Table 10.1.

b. Overpotential tests:

1. Maximum applied AC or DC voltage in accordance with NETA ATS, Table 10.1.
2. Phase-to-phase and phase-to-ground for 1 minute for each phase of each bus section.
3. Test results evaluated on pass/fail basis.

c. Current injection through overload unit at 300 percent of motor full-load current and monitor trip time:

1. Trip time in accordance with manufacturer's published data.
2. Investigate values in excess of 120 seconds.

d. Control wiring tests:

1. Apply secondary voltage to control power and potential circuits.
2. Check voltage levels at each point on terminal boards and each device terminal.
3. Insulation resistance test at 1,000 volts DC on control wiring except that connected to solid state components.

e. Operational test by initiating control devices to affect proper operation.

3.13 LOW VOLTAGE SURGE ARRESTORS

3.13.1 Visual and Mechanical Inspection

a. Adequate clearances between arrestors and enclosures.

b. Ground connections to ground electrode.

3.13.2 Electrical Tests

3.13.2.1 Varistor Type Arrestors

a. Clamping voltage test.

b. Rated RMS voltage test.

c. Rated DC voltage test.

d. Varistor arrestor test values in accordance with IEEE C62.33, Sections 4.4 and 4.7.

-- End of Section --