IFB No. W912PL-05-B-0008

US Army Corps of Engineers
Los Angeles District

Ventura Harbor Maintenance Dredging

Ventura County, California

Construction Solicitation and Specifications

Unrestricted

July 2005

VENTURA HARBOR MAINTENANCE DREDGING, VENTURA COUNTY
W912PL-05-B-0008

PROJECT TABLE OF CONTENTS

COVER COVER
TOC TABLE OF CONTENTS

DIVISION 0 - BIDDING REQUIREMENTS, CONTRACT FORMS AND CONTRACT CONDITIONS

SF1442 SOLICITATION, OFFER and AWARD (SF 1442)
00010 BIDDERS NOTES/BID SCHEDULE
00010a BIDDING SCHEDULE
00100 BIDDING SCHEDULE/INSTRUCTIONS TO BIDDERS
00600 REPRERSENTATIONS AND CERTIFICATIONS
00700 CONTRACT CLAUSES
00800 SPECIAL CONTRACT REQUIREMENTS
00850 WAGE RATES

DIVISION 1 - GENERAL REQUIREMENTS

01200 GENERAL REQUIREMENTS
01200b CONSTRUCTION SIGNS
01270 MEASUREMENT AND PAYMENT
01312A QUALITY CONTROL SYSTEM (QCS)
01330 SUBMITTAL PROCEDURES
01330b SUBMITTAL REGISTER
01330c SUBMITTAL FORM (4025)
01355 ENVIRONMENTAL PROTECTION
01420 SOURCES FOR REFERENCE PUBLICATIONS
01451 CONTRACTOR QUALITY CONTROL
01451a CONTRACTOR QUALITY CONTROL REPORT (SAMPLE)

DIVISION 2 - SITE WORK|DIV_02.pdf

02000 Mobilization and Demobilization
02020 Dredging
02020a Dredging, Table 1. Sample Data
02020b Dredging, Table 2. Gradations

SOLICITATION, OFFER, AND AWARD *(Construction, Alteration, or Repair)*	1. SOLICITATION NO. W912PL-05-B-0008	2. TYPE OF SOLICITATION ☒ SEALED BID *(IFB)* ☐ NEGOTIATED *(RFP)*	3. DATE ISSUED 19 JULY 2005	PAGE OF PAGES 1

IMPORTANT - The "offer" section on the reverse must be fully completed by offeror.

4. CONTRACT NO.	5. REQUISITION/PURCHASE REQUEST NO.	6. PROJECT NO.

7. ISSUED BY CODE	8. ADDRESS OFFER TO
Los Angeles District, Corps of Engineers Contracting Division-West Region Branch P.O. Box 532711 Los Angeles, CA 90053-2325	Los Angeles District, Corps of Engineers Contracting Division-West Region Branch P.O. Box 532711 Los Angeles, CA 90053-2325

9. FOR INFORMATION CALL:	A. NAME Mary Ann Powers	B. TELEPHONE NO. *(Include area code) (NO COLLECT CALLS)* (213) 452-3254

SOLICITATION

NOTE: In sealed bid solicitations "offer" and "offeror" mean "bid" and "bidder".

10. THE GOVERNMENT REQUIRES PERFORMANCE OF THE WORK DESCRIBED IN THESE DOCUMENTS *(Title, identifying no., date):*
Ventura Harbor Maintenance Dredging, Ventura County, California

Project consists of annual maintenance dredging of the federal navigation channels of Ventura Harbor and placement of the material either on the beach or in the nearshore. Amount of dredge material available annually is approximately 500,000 cubic meters. Term of contract is base year and two option years.

The estimated amount of this project is between $5,000,000.00 and $10,000,000.00.

Bidders please note: When applicable, the Price Evaluation Preference for HUBZone Small Business Concerns will be applied to this procurement. Refer to Section 00600, Contract Clause No. 52.219-4, entitled "Price Evaluation Preference for HUBZone Small Business Concerns."

This procurement may be delayed, concelled, or revised at any time during the solicitation, evaluation, and/or final award process.

11. The Contractor shall begin performance within _____ calendar days and complete it within * calendar days after receiving ☐ award, ☒ notice to proceed. This performance period is ☒ mandatory, ☐ negotiable. *(See* Section 00800 *.)*

12A. THE CONTRACTOR MUST FURNISH ANY REQUIRED PERFORMANCE AND PAYMENT BONDS? *(If "YES," indicate within how may calendar days after award in Item 12B.)*	12B. CALENDAR DAYS
☒ YES ☐ NO	10

13. ADDITIONAL SOLICITATION REQUIREMENTS:

A. Sealed offers in original and 0 copies to perform the work required are due at the place specified in Item 8 by 1300 *(hour)* local time 18 Aug 2005 *(date).* If this is a sealed bid solicitation, offers will be publicly opened at that time. Sealed envelopes containing offers shall be marked to show the offeror's name and address, the solicitation number, and the date and time offers are due.

B. An offer guarantee ☒ is, ☐ is not required.

C. All offers are subject to the (1) work requirements, and (2) other provisions and clauses incorporated in the solicitation in full text or by reference.

D. Offers providing less than 60 calendar days for Government acceptance after the date offers are due will not be considered and will be rejected.

OFFER *(Must be fully completed by offeror)*

14. NAME AND ADDRESS OF OFFEROR *(Include ZIP Code)*	15. TELEPHONE NO. *(Include area code)*
	16. REMITTANCE ADDRESS *(Include only if different than Item 14)*
CODE FACILITY CODE	

17. The offeror agrees to perform the work required at the prices specified below in strict accordance with the terms of this solicitation, if this offer is accepted by the Government in writing within _____ calendar days after the date offers are due. *(Insert any number equal to or greater than the minimum requirement stated in Item 13D. Failure to insert any number means the offeror accepts the minimum in Item 13D.*

AMOUNTS ▶ SEE SCHEDULE

18. The offeror agrees to furnish any required performance and payment bonds.

19. ACKNOWLEDGMENT OF AMENDMENTS

(The offeror acknowledges receipt of amendments to the solicitation - give number and date of each)

AMENDMENT NO.										
DATE										

20A. NAME AND TITLE OF PERSON AUTHORIZED TO SIGN OFFER *(Type or print)*	20B. SIGNATURE	20C. OFFER DATE

AWARD *(To be completed by Government)*

21. ITEMS ACCEPTED:

22. AMOUNT	23. ACCOUNTING AND APPROPRIATION DATA
24. SUBMIT INVOICES TO ADDRESS SHOWN IN ▶ *(4 Copies unless otherwise specified)* ITEM	25. OTHER THAN FULL AND OPEN COMPETITION PURSUANT TO ☐ 10 U.S.C 2304(c) ( ) ☐ 41 U.S.C 253(c) ( )
26. ADMINISTERED BY CODE	27. PAYMENT WILL BE MADE BY

CONTRACTING OFFICER WILL COMPLETE ITEM 28 OR 29 AS APPLICABLE

☐ 28. NEGOTIATED AGREEMENT *Contractor is required to sign this document and return _____ copies to issuing office.)* Contractor agrees to furnish and deliver all items or perform all work requirements identified on this form and any continuation sheets for the consideration stated in this contract. The rights and obligations of the parties to this contract shall be governed by (a) this contract award, (b) the solicitation, and (c) the clauses, representations, certifications, and specifications incorporated by reference in or attached to this contract.

☐ 29. AWARD *(Contractor is not required to sign this document.)* Your offer on this solicitation is hereby accepted as to the items listed. This award consummates the contract, which consists of (a) the Government solicitation and your offer, and (b) this contract award. No further contractual document is necessary.

30A. NAME AND TITLE OF CONTRACTOR OR PERSON AUTHORIZED TO SIGN *(Type or print)*		31A. NAME OF CONTRACTING OFFICER *(Type or print)*	
30B. SIGNATURE	30C. DATE	31B. UNITED STATES OF AMERICA BY	31C. AWARD DATE

SECTION 00010

BIDDING SCHEDULE

Item No.	Description	Estimated Quantity	Unit	Unit Price	Amount
1.	Mobilization and Demobilization, First Cycle	1	Job	Lump Sum	$_____
2.	Dredging, First Year Cycle				
2A.	First 200,000 m^3	200,000	Cubic Meters	$_____	$_____
2B.	Over 200,000 m^3	300,000	Cubic Meters	$_____	$_____
	OPTION ITEMS				
3.	Mobilization and Demobilization, Second Cycle	1	Job	Lump Sum	$_____
4.	Dredging, Second Year Cycle				
4A.	First 200,000 m^3	200,000	Cubic Meters	$_____	$_____
4B.	Over 200,000 m^3	300,000	Cubic Meters	$_____	$_____
5.	Mobilization and Demobilization, Third Year	1	Job	Lump Sum	$_____
6.	Dredging, Third Year Cycle				
6A.	First 200,000 m^3	200,000	Cubic Meters	$_____	$_____
6B.	Over 200,000 m^3	300,000	Cubic Meters	$_____	$_____

TOTAL BID TOTAL ESTIMATED AMOUNT $ _____.__

NOTES:

1. All extensions of the unit prices shown will be subject to verification by the Government. In cases of variation between the unit price and extension, the unit price will be considered to be the bid.

2. If a bid or modification to a bid based on unit prices is submitted which provides for a lump sum adjustment to the total amount, the application of the lump sum adjustment to each unit price in the Schedule must be stated. If it is not stated, the bidder agrees that the lump sum adjustment shall be applied on a pro-rata basis to every unit price in the Schedule.

3. Amounts and prices shall be indicated in either figures or words, NOT BOTH.

4. Bids shall be submitted on all items of the Schedule.

5. All quantities not identified as Lump Sum are considered to be Estimated.

6. The Option Items may be exercised in accordance with SECTION: INSTRUCTIONS TO BIDDERS. Exercises of the options will be made by the Contracting Officer in writing. For determination of low bidder, see paragraph in SECTION 00100: INSTRUCTIONS, CONDITIONS, AND NOTICE TO BIDDERS

7. The Contractor shall furnish all plant, labor, material, equipment, etc., necessary to perform all work in strict accordance with the terms and conditions set forth in the contract to include all attachment thereto.

SECTION 00010
Bidders Notes/Bid Schedule

1. All extensions of the unit prices shown will be subject to verification by the Government. In case of variation between the unit price and the extension, the unit price will be considered to be the bid.

2. If a modification to a bid based on unit prices is submitted which provides for a lump sum adjustment to the total estimated amount, the application of the lump sum adjustment to each unit price in the Price Schedule must be stated. If it is not stated, the bidder agrees that the lump sum adjustment shall be applied on a pro rata basis to every unit price in the Price Schedule.

3. Prices must be submitted on all individual items of the Price Schedule, otherwise the bid will be considered non-responsive and will be rejected.

4. For the purpose of initial evaluation of bids, the following will be utilized in resolving arithmetic discrepancies found on the face of the Price Schedule as submitted by the bidder:

a. Obviously misplaced decimal points will be corrected;
b. In case of discrepancy between the unit price and the extended price, the unit price will govern;
c. Apparent errors in extensions of unit prices will be corrected;
d. Apparent errors in addition of lump sum and extended prices will be corrected.

5. For the purpose of bid evaluation, the Government will proceed on the assumption that the bidder intends the bid to be evaluated on the basis of unit prices the totals arrived at by the resolution of arithmetic discrepancies as provided above and the bid will be so reflected on the abstract of bids.

6. The lump sum “LS” line items in the Price Schedule are not “Estimated Quantity” line items and are not subject to the “Variation in Estimated Quantity” contract clause.

7. The Contract Clause 52.232-27, “Prompt Payment for Construction Contracts” requires that the name and address of the contractor official, to whom payment is to be sent, be the same as that in the contract or in a proper Notice of Assignment.

8. Principal Contracting Officer. The Contracting Officer who signs this contract will be the Principal Contracting Officer for this contract. However, any Contracting Officer assigned to the Los Angeles District, contracting within his authority, may take formal action on this contract when the Principal Contracting Officer is unavailable and the action needs to be taken.

9. Amounts and prices shall be indicated in either words or figures, NOT BOTH.

10. Payment of Electronic Funds Transfer (EFT) is the mandatory method of payment. The Contractors attention is directed to Contract Clause No. 52.232-33 “Payment By Electronic Funds Transfer-Central contractor Registration (Oct 2003)”

11. The bidder shall distribute his indirect costs (overhead, profit, bond, etc.,) over all items in the Price Schedule. The Government will review all submitted Price Schedules for any unbalancing of the items. Any submitted Price Schedule determined to be unbalanced may be considered non-responsive and cause the bidder to be ineligible for contract award.

12. The bidder shall furnish all plant, labor, material, equipment, etc., necessary to perform all work in strict accordance with the terms and conditions set forth in the contract to include all attachments thereto.

13. Some quantities are ESTIMATED, the bidders prices MUST BE FIRM.

14. Bidder is cautioned to check his Price Schedule carefully prior to submission. If the Price Schedule contains unit prices, they should be round off to the second decimal point only NOT EXTENDED FURTHER.

15. At the formal bid opening for this solicitation, all hand carried bids submitted prior to 12:45 p.m. on the bid opening date will be accepted in Room 1035 and Room 1040 by available personnel. For the time period 12:45p.m. to 1:00 p.m., bids must be submitted to Room 1035 (bid opening room), to the bid opening officer only. Bids will not be accepted by any other personnel or at any other location. No bid will be accepted after 1:00 p.m. The official bid opening time will be the clock posted on the wall in the bid opening room (1035).

16. Contractor is required to fill in Cage code (Reference Section 00600, entitled "Required Central Contractor Registration" Mar 1998) and DUNS Number (Reference Section 00600, entitled, "Data Universal Numbering System (DUNS) Number" Jun1999) in Block No. 15 on Standard Form 1442, Name and Address Block (Cage Code under Code and DUNS No. under Facility Code respectively).

16. The Government contemplates award one contract to the responsive, responsible bidder who submits the low bid for the total of all the items in the Price Schedule.

CERTIFICATE OF CORPORATE PRINCIPAL

1) IF THE OFFEROR IS A JOINT VENTURE, COMPLETE THE FOLLOWING:

_____	_____	_____
(Company Name)	(Signature)	(Title)
_____	_____	_____
(Company Name)	(Signature)	(Title)
_____	_____	_____
(Company Name)	(Signature)	(Title)

2) IF THE OFFEROR IS PARTNERSHIP, LIST FULL NAME OF ALL PARTNERS:

_____	_____	_____
(Company Name)	(Signature)	(Title)
_____	_____	_____
(Company Name)	(Signature)	(Title)
_____	_____	_____
(Company Name)	(Signature)	(Title)

3) IF THE OFFEROR IS A CORPORATION, THE FOLLOWING CERTIFICATION SHOULD BE COMPLETED:

CERTIFICATION AS TO CORPORATE PRINCIPAL

I, _____ , certify that I am the Secretary of the corporation named as principal in the

within contract; that _____ , who signed the said contract on behalf of the principal, was the

_____ of the corporation; that I know his signature and that his signature is genuine; and that said contract was duly signed, sealed and attested for in behalf of said corporation by authority of its governing body.

_____
CORPORATE PRINCIPAL

CORPORATE SEAL

_____
SECRETARY

Section 00100
Bidding Schedule/Instructions to Bidders

52.000-4515 SECURITY CONTRACT LANGUAGE FOR ALL CORPS OF ENGINEERS' UNCLASSIFIED CONTRACTS (APR 2004) 2
52.0000-4010 INQUIRIES 3
52.0001-4004 BID RESULTS 3
52.211-2 AVAILABILITY OF SPECIFICATIONS LISTED IN THE DOD INDEX OF SPECIFICATIONS AND STANDARDS (DODISS) AND DESCRIPTIONS LISTED IN THE ACQUISITION MANAGEMENT SYSTEMS AND DATA REQUIREMENTS CONTROL LIST, DOD 5010.12-L (DEC 2003) 3
52.214-3 AMENDMENTS TO INVITATIONS FOR BIDS (DEC 1989) 4
52.214-4 FALSE STATEMENTS IN BIDS (APR 1984) 4
52.214-5 SUBMISSION OF BIDS (MAR 1997) 4
52.214-6 EXPLANATION TO PROSPECTIVE BIDDERS (APR 1984) 4
52.214-7 LATE SUBMISSIONS, MODIFICATIONS, AND WITHDRAWALS OF BIDS (NOV 1999) 5
52.214-18 PREPARATION OF BIDS--CONSTRUCTION (APR 1984) 5
52.214-19 CONTRACT AWARD--SEALED BIDDING--CONSTRUCTION (AUG 1996) 6
52.214-34 SUBMISSION OF OFFERS IN THE ENGLISH LANGUAGE (APR 1991) 6
52.214-35 SUBMISSION OF OFFERS IN U.S. CURRENCY (APR 1991) 6
52.0214-4002 DIRECTIONS FOR SUBMITTING BIDS 6
52.0214-4583 TELEGRAPHIC BIDS/OFFERS ARE NOT ACCEPTABLE 7
52.0214-4599 EVALUATION FOR AWARD 7
52.216-1 TYPE OF CONTRACT (APR 1984) 7
52.217-5 EVALUATION OF OPTIONS (JUL 1990) 7
52.219-2 EQUAL LOW BIDS. (OCT 1995) 7
52.225-10 NOTICE OF BUY AMERICAN ACT REQUIREMENT--CONSTRUCTION MATERIALS (MAY 2002) 8
52.225-13 RESTRICTIONS ON CERTAIN FOREIGN PURCHASES (MAR 2005) 8
52.228-1 BID GUARANTEE (SEP 1996) 9
52.228-4506 INDIVIDUAL SURETIES IN SUPPORT OF BID BONDS 9
52.228-4507 BID GUARANTEE FORM AND AMOUNT 9
52.233-2 SERVICE OF PROTEST (AUG 1996) 10
52.236-7 PERMITS AND RESPONSIBILITIES (NOV 1991) 10
52.236-27 SITE VISIT (CONSTRUCTION) (FEB 1995) 10

52.000-4515 SECURITY CONTRACT LANGUAGE FOR ALL CORPS OF ENGINEERS' UNCLASSIFIED CONTRACTS (APR 2004)

A. AUTOMATED INFORMATION SYSTEM (AIS) EFFORT

All Contractor employees (U.S. citizens and Non- U.S. citizens) working under this contract *(to include grants, cooperative agreements and task orders)* who require access to Automated Information Systems (AIS), (stand alone computers, network computers/systems, e-mail) shall, at a minimum, be designated into an ADP-III position (non-sensitive) in accordance with DoD 5220-22-R, Industrial Security Regulation. The investigative requirements for an ADP-III position are a favorable National Agency Check (NAC), SF-85P, Public Trust Position. The contractor shall have each applicable employee complete a SF-85P and submit to the Los Angeles District, ATTN: CESPL-P.O Box 532711, Los Angeles, California 90053 Security Officer within three (3) working days after award of any contract or task order, and shall be submitted prior to the individual being permitted access to an AIS. Contractors that have a commercial or government entity (CAGE) Code and Facility Security Clearance through the Defense Security Service shall process the NACs and forward visit requests/results of NAC to the Los Angeles District Security Officer. For those contractors that do not have a CAGE Code or Facility Security Clearance, the Los Angeles District Security Office will process the investigation in coordination with the Contractor and contract employees.

B. NATIONAL INFRASTRUCTURES EFFORTS

Contractor employees scheduled to access the Homeland Security determined National Infrastructures, i.e., Powerhouses, Switchyards, Locks/Dams or other restricted/sensitive areas are required to submit a State Bureau of Investigation Criminal Records (History) Check from the state where the work will be performed to the Contracting Officer no later than ten (10) working days after contract award. In addition to providing the individual Criminal Records (History) Check, contractor employees scheduled to have access to the National Infrastructures for six (6) months or longer required a favorable Public Trust Background Investigation (SF-85P), which includes fingerprints (FD-258). Contractor employees may have the finger print card (FD-258) completed by local law enforcement anyone qualified in the Los Angeles District Field Offices, or by making an appointment with the District Security Officer, (enter the Security Officer's name and telephone number).
The contractor shall have each applicable employee provide the completed SF-85P and FD-258 to the Los Angeles Security Office as soon as possible after contract award, but definitely prior to the employee being permitted access to the work area.

C. FOREIGN NATIONALS

Contractor employees scheduled to access the Homeland Security determined National Infrastructures, i.e., Powerhouses, Switchyards, Locks/Dams or other restricted/sensitive areas are required to submit a State Bureau of Investigation Criminal Records (History
In accordance with Engineering Regulation, ER 380-1-18, Section 4, foreign nationals who work on Corps of Engineers' contracts or task orders shall be approved by the HQUSACE Foreign Disclosure Officer or higher before beginning work on the contract/task order. This regulation includes subcontractor employees. (NOTE: exceptions to the above requirement include foreign nationals who perform janitorial and/or ground maintenance services.) The contractor shall submit to the Division/District Contract Office, the names of all foreign nationals proposed for performance under this contract/task order, along with documentation to verify that he/she was legally admitted into the United States and has authority to work and/or go to school in the US. Such documentation may include a US passport, Certificate of US citizenship (INS Form N-560 or N-561), Certificate of Naturalization (INS Form N-550 or N-570), foreign passport with I-551 stamp or attached INS Form I-94 indicating employment authorization, Alien Registration Receipt Card with photograph (INS Form I-151 or I-551), Temporary Resident Card (INS Form I-688), Employment Authorization Card (INS Form I-688A), Reentry Permit (INS Form I-327), Refugee

Travel Document (INS Form I-571), Employment Authorization Document issued by the INS which contains a photograph (INS Form I-688B).

Classified contracts require the issuance of a DD Form 254 (Department of Defense Contract Security Classification Specification).

(End of Clause)

52.0000-4010 INQUIRIES

Perspective bidders/offerors should submit inquiries related to this solicitation by writing or calling the following (collect calls will not be accepted:

(1) For inquiries of a contractual nature (solicitation requirements, interpretation of contractual language) call:
Mary Ann Powers

(213) 452-3254

For bid results only, call (213) 452-3235.

(2) All technical questions on the specification or drawings will be submitted in writing to:
Address:
USAED-LOS ANGELES
ATTN: CESPL-CT-W (M. POWERS)
P. O. BOX 532711
LOS ANGELES, CA 90053-2325

(213) 452-4187 (FAX). .

(3) Please include the solicitation number, project title and location of project with your questions. Written inquiries must be received by this office not later than 14 calendar days prior to bid opening date/date set for receipt of offers.

(4) Oral explanations or instructions are not binding. Any information given to a bidder/offeror which impacts the bid/offer will be given in the form of a written amendment to the solicitation.

52.0001-4004 BID RESULTS

The telephone number for bid results after the opening is Area Code (213) 452-3235.

52.211-2 AVAILABILITY OF SPECIFICATIONS LISTED IN THE DOD INDEX OF SPECIFICATIONS AND STANDARDS (DODISS) AND DESCRIPTIONS LISTED IN THE ACQUISITION MANAGEMENT SYSTEMS AND DATA REQUIREMENTS CONTROL LIST, DOD 5010.12-L (DEC 2003)

Copies of specifications, standards, and data item descriptions cited in this solicitation may be obtained--

(a) From the ASSIST database via the Internet at http://assist.daps.dla.mil; or

(b) By submitting a request to the--Department of Defense Single Stock Point (DoDSSP), Building 4, Section D, 700 Robbins Avenue, Philadelphia, PA 19111-5094, Telephone (215) 697-2179, Facsimile (215) 697-1462.

(End of provision)

52.214-3 AMENDMENTS TO INVITATIONS FOR BIDS (DEC 1989)

(a) If this solicitation is amended, then all terms and conditions which are not modified remain unchanged.

(b) Bidders shall acknowledge receipt of any amendment to this solicitation (1) by signing and returning the amendment, (2) by identifying the amendment number and date in the space provided for this purpose on the form for submitting a bid, (3) by letter or telegram, or (4) by facsimile, if facsimile bids are authorized in the solicitation. The Government must receive the acknowledgment by the time and at the place specified for receipt of bids.

(End of provision)

52.214-4 FALSE STATEMENTS IN BIDS (APR 1984)

Bidders must provide full, accurate, and complete information as required by this solicitation and its attachments. The penalty for making false statements in bids is prescribed in 18 U.S.C. 1001.

(End of provision)

52.214-5 SUBMISSION OF BIDS (MAR 1997)

(a) Bids and bid modifications shall be submitted in sealed envelopes or packages (unless submitted by electronic means) (1) addressed to the office specified in the solicitation, and (2) showing the time and date specified for receipt, the solicitation number, and the name and address of the bidder.

(b) Bidders using commercial carrier services shall ensure that the bid is addressed and marked on the outermost envelope or wrapper as prescribed in subparagraphs (a)(1) and (2) of this provision when delivered to the office specified in the solicitation.

(c) Telegraphic bids will not be considered unless authorized by the solicitation; however, bids may be modified or withdrawn by written or telegraphic notice.

(d) Facsimile bids, modifications, or withdrawals, will not be considered unless authorized by the solicitation.

(e) Bids submitted by electronic commerce shall be considered only if the electronic commerce method was specifically stipulated or permitted by the solicitation.

(End of provision)

52.214-6 EXPLANATION TO PROSPECTIVE BIDDERS (APR 1984)

Any prospective bidder desiring an explanation or interpretation of the solicitation, drawings, specifications, etc., must request it in writing soon enough to allow a reply to reach all prospective bidders before the submission of their bids. Oral explanations or instructions given before the award of a contract will not be binding. Any information given a prospective bidder concerning a solicitation will be furnished promptly to all other prospective bidders as an amendment to the solicitation, if that information is necessary in submitting bids or if the lack of it would be prejudicial to other prospective bidders.

(End of provision)

52.214-7 LATE SUBMISSIONS, MODIFICATIONS, AND WITHDRAWALS OF BIDS (NOV 1999)

(a) Bidders are responsible for submitting bids, and any modifications or withdrawals, so as to reach the Government office designated in the invitation for bids (IFB) by the time specified in the IFB. If no time is specified in the IFB, the time for receipt is 4:30 p.m., local time, for the designated Government office on the date that bids are due.

(b)(1) Any bid, modification, or withdrawal received at the Government office designated in the IFB after the exact time specified for receipt of bids is “late” and will not be considered unless it is received before award is made, the Contracting Officer determines that accepting the late bid would not unduly delay the acquisition; and--

(i) If it was transmitted through an electronic commerce method authorized by the IFB, it was received at the initial point of entry to the Government infrastructure not later than 5:00 p.m. one working day prior to the date specified for receipt of bids; or

(ii) There is acceptable evidence to establish that it was received at the Government installation designated for receipt of bids and was under the Government's control prior to the time set for receipt of bids.

(2) However, a late modification of an otherwise successful bid that makes its terms more favorable to the Government, will be considered at any time it is received and may be accepted.

(c) Acceptable evidence to establish the time of receipt at the Government installation includes the time/date stamp of that installation on the bid wrapper, other documentary evidence of receipt maintained by the installation, or oral testimony or statements of Government personnel.

(d) If an emergency or unanticipated event interrupts normal Government processes so that bids cannot be received at the Government office designated for receipt of bids by the exact time specified in the IFB and urgent Government requirements preclude amendment of the IFB, the time specified for receipt of bids will be deemed to be extended to the same time of day specified in the solicitation on the first work day on which normal Government processes resume.

(e) Bids may be withdrawn by written notice received at any time before the exact time set for receipt of bids. If the IFB authorizes facsimile bids, bids may be withdrawn via facsimile received at any time before the exact time set for receipt of bids, subject to the conditions specified in the provision at 52.214-31, Facsimile Bids. A bid may be withdrawn in person by a bidder or its authorized representative if, before the exact time set for receipt of bids, the identity of the person requesting withdrawal is established and the person signs a receipt for the bid.

(End of provision)

52.214-18 PREPARATION OF BIDS--CONSTRUCTION (APR 1984)

(a) Bids must be (1) submitted on the forms furnished by the Government or on copies of those forms, and (2) manually signed. The person signing a bid must initial each erasure or change appearing on any bid form.

(b) The bid form may require bidders to submit bid prices for one or more items on various bases, including--

(1) Lump sum bidding;

(2) Alternate prices;

(3) Units of construction; or

(4) Any combination of subparagraphs (1) through (3) above.

(c) If the solicitation requires bidding on all items, failure to do so will disqualify the bid. If bidding on all items is not required, bidders should insert the words "no bid" in the space provided for any item on which no price is submitted.

(d) Alternate bids will not be considered unless this solicitation authorizes their submission.

(End of provision)

52.214-19 CONTRACT AWARD--SEALED BIDDING--CONSTRUCTION (AUG 1996)

(a) The Government will evaluate bids in response to this solicitation without discussions and will award a contract to the responsible bidder whose bid, conforming to the solicitation, will be most advantageous to the Government, considering only price and the price-related factors specified elsewhere in the solicitation.

(b) The Government may reject any or all bids, and waive informalities or minor irregularities in bids received.

(c) The Government may accept any item or combination of items, unless doing so is precluded by a restrictive limitation in the solicitation or the bid.

(d) The Government may reject a bid as nonresponsive if the prices bid are materially unbalanced between line items or subline items. A bid is materially unbalanced when it is based on prices significantly less than cost for some work and prices which are significantly overstated in relation to cost for other work, and if there is a reasonable doubt that the bid will result in the lowest overall cost to the Government even though it may be the low evaluated bid, or if it is so unbalanced as to be tantamount to allowing an advance payment.

52.214-34 SUBMISSION OF OFFERS IN THE ENGLISH LANGUAGE (APR 1991)

Offers submitted in response to this solicitation shall be in the English language. Offers received in other than English shall be rejected.

(End of provision)

52.214-35 SUBMISSION OF OFFERS IN U.S. CURRENCY (APR 1991)

Offers submitted in response to this solicitation shall be in terms of U.S. dollars. Offers received in other than U.S. dollars shall be rejected.

(End of provision)

52.0214-4002 DIRECTIONS FOR SUBMITTING BIDS

(a) Envelopes containing bids, bid guarantees, etc., must be sealed, marked and addressed as follows:

TO: US ARMY ENGINEER DISTRICT, LOS ANGELES
USAED-LOS ANGELES
P. O. BOX 532711
LOS ANGELES, CA 90053-2325

Bid under IFB No. W912PL-05-B-0008
Bid Opening Date: AUGUST 4, 2005 AT 1:00 P.M.

(b) Hand carried bids shall be deposited at US Army Engineer District, Los Angeles, 915 WILSHIRE BLVD., LOS ANGELES, CA 90017, ROOM 980 prior to the time and date set for opening of bids.

(c) Telegraphic Modifications to Bids should be addressed to:

US Army Engineer District, Los Angeles

52.0214-4583 TELEGRAPHIC BIDS/OFFERS ARE NOT ACCEPTABLE

Any telegram to modify or withdraw a bid/offer sent to this office must be physically delivered to the office designated for receipt of bid/offer by the date and time set for bid opening/receipt of proposals.
No one from this office will be dispatched to the local telegraph office to pick up any telegram for any reason.

52.0214-4599 EVALUATION FOR AWARD

The Government contemplates award of one contract to the responsive, responsible bidder who submits the low bid for the total of all the items in the Bidding Schedule.

52.216-1 TYPE OF CONTRACT (APR 1984)

The Government contemplates award of a firm fixed price contract resulting from this solicitation.

(End of clause)

52.217-5 EVALUATION OF OPTIONS (JUL 1990)

Except when it is determined in accordance with FAR 17.206(b) not to be in the Government's best interests, the Government will evaluate offers for award purposes by adding the total price for all options to the total price for the basic requirement. Evaluation of options will not obligate the Government to exercise the option(s).
(End of provision)

52.219-2 EQUAL LOW BIDS. (OCT 1995)

(a) This provision applies to small business concerns only.

(b) The bidder's status as a labor surplus area (LSA) concern may affect entitlement to award in case of tie bids. If the bidder wishes to be considered for this priority, the bidder must identify, in the following space, the LSA in which the costs to be incurred on account of manufacturing or production (by the bidder or the first-tier subcontractors) amount to more than 50 percent of the contract price.

_____
_
_____
_

(c) Failure to identify the labor surplus area as specified in paragraph (b) of this provision will preclude the bidder from receiving priority consideration. If the bidder is awarded a contract as a result of receiving priority consideration under this provision and would not have otherwise received award, the bidder shall perform the contract or cause the contract to be performed in accordance with the obligations of an LSA concern.

52.225-10 NOTICE OF BUY AMERICAN ACT REQUIREMENT--CONSTRUCTION MATERIALS (MAY 2002)

(a) Definitions. Construction material, domestic construction material, and foreign construction material, as used in this provision, are defined in the clause of this solicitation entitled “Buy American Act -- Construction Materials” (Federal Acquisition Regulation (FAR) clause 52.225-9).

(b) Requests for determinations of inapplicability. An offeror requesting a determination regarding the inapplicability of the Buy American Act should submit the request to the Contracting Officer in time to allow a determination before submission of offers. The offeror shall include the information and applicable supporting data required by paragraphs (c) and (d) of the clause at FAR 52.225-9 in the request. If an offeror has not requested a determination regarding the inapplicability of the Buy American Act before submitting its offer, or has not received a response to a previous request, the offeror shall include the information and supporting data in the offer.

(c) Evaluation of offers. (1) The Government will evaluate an offer requesting exception to the requirements of the Buy American Act, based on claimed unreasonable cost of domestic construction material, by adding to the offered price the appropriate percentage of the cost of such foreign construction material, as specified in paragraph (b)(3)(i) of the clause at FAR 52.225-9.

(2) If evaluation results in a tie between an offeror that requested the substitution of foreign construction material based on unreasonable cost and an offeror that did not request an exception, the Contracting Officer will award to the offeror that did not request an exception based on unreasonable cost.

(d) Alternate offers.

(1) When an offer includes foreign construction material not listed by the Government in this solicitation in paragraph (b)(2) of the clause at FAR 52.225-9, the offeror also may submit an alternate offer based on use of equivalent domestic construction material.

(2) If an alternate offer is submitted, the offeror shall submit a separate Standard Form 1442 for the alternate offer, and a separate price comparison table prepared in accordance with paragraphs (c) and (d) of the clause at FAR 52.225-9 for the offer that is based on the use of any foreign construction material for which the Government has not yet determined an exception applies.

(3) If the Government determines that a particular exception requested in accordance with paragraph (c) of the clause at FAR 52.225-9 does not apply, the Government will evaluate only those offers based on use of the equivalent domestic construction material, and the offeror shall be required to furnish such domestic construction material. An offer based on use of the foreign construction material for which an exception was requested--

(i) Will be rejected as nonresponsive if this acquisition is conducted by sealed bidding; or

(ii) May be accepted if revised during negotiations.

(End of provision)

52.225-13 RESTRICTIONS ON CERTAIN FOREIGN PURCHASES (MAR 2005)

(a) Except as authorized by the Office of Foreign Assets Control (OFAC) in the Department of the Treasury, the Contractor shall not acquire, for use in the performance of this contract, any supplies or services if any proclamation, Executive order, or statute administered by OFAC, or if OFAC's implementing regulations at 31 CFR chapter V, would prohibit such a transaction by a person subject to the jurisdiction of the United States.

(b) Except as authorized by OFAC, most transactions involving Cuba, Iran, Libya, and Sudan are prohibited, as are most imports from North Korea, into the United States or its outlying areas. Lists of entities and individuals subject to economic sanctions are included in OFAC's List of Specially Designated Nationals and Blocked Persons at TerList1.html. More information about these restrictions, as well as updates, is available in the OFAC's regulations at 31 CFR chapter V and/or on OFAC's Web site at http://epls.arnet.gov/News.html.

(c) The Contractor shall insert this clause, including this paragraph (c), in all subcontracts.

(End of clause)

52.228-1 BID GUARANTEE (SEP 1996)

(a) Failure to furnish a bid guarantee in the proper form and amount, by the time set for opening of bids, may be cause for rejection of the bid.

(b) The bidder shall furnish a bid guarantee in the form of a firm commitment, e.g., bid bond supported by good and sufficient surety or sureties acceptable to the Government, postal money order, certified check, cashier's check, irrevocable letter of credit, or, under Treasury Department regulations, certain bonds or notes of the United States. The Contracting Officer will return bid guarantees, other than bid bonds, (1) to unsuccessful bidders as soon as practicable after the opening of bids, and (2) to the successful bidder upon execution of contractual documents and bonds (including any necessary coinsurance or reinsurance agreements), as required by the bid as accepted.-

(c) The amount of the bid guarantee shall be _____ percent of the bid price or $_____, whichever is less.-

(d) If the successful bidder, upon acceptance of its bid by the Government within the period specified for acceptance, fails to execute all contractual documents or furnish executed bond(s) within 10 days after receipt of the forms by the bidder, the Contracting Officer may terminate the contract for default.-

(e) In the event the contract is terminated for default, the bidder is liable for any cost of acquiring the work that exceeds the amount of its bid, and the bid guarantee is available to offset the difference.

(End of clause)

52.228-4506 INDIVIDUAL SURETIES IN SUPPORT OF BID BONDS

Bidder/offerors utilizing individual sureties in support of a bid bond shall include a Standard Form (SF) 28 (Affidavit of Individual Surety), accompanied by a pledge of acceptable assets from each person acting as an individual surety, and include these with the SF 24 (Bid Bond), and the bid itself (see clause titled "Pledges of Assets," FAR 52.228-11).

Pledges of acceptable assets shall be in the form of (1) evidence of an escrow account and/or (2) a recorded lien on real estate. If this is an RFP, failure to provide required documentation described herein may cause the offeror to be deemed "unacceptable".

52.228-4507 BID GUARANTEE FORM AND AMOUNT

When bids/proposals exceed $100,000, the offeror shall furnish a separated bid guarantee in accordance with the solicitation provision titled "Bid Guarantee", FAR 52.228-1. In accordance with FAR 28.101-2 the bid guarantee amount shall be a least 20 percent of the "bid price" but shall not exceed $3 million. When the penal sum is expressed as a percentage, a maximum dollar limitation may be stated. If there are

option line items on the Pricing Schedule (Schedule B), the term "bid price" is hereby defined as the total bid not to include any amount for line items designated as "options". In bids/proposals that contain "additives", the "bid price" is defined as the total of all bid items including additive line items. FAR 28.106-1 states that a Standard Form (SF) 24 shall be used for the bid bond. In accordance with FAR 28.202(a)(1), corporate sureties utilized must appear on the list contained in the Department of Treasury Circular 570 titled "Companies Holding Certificates of Authority as Acceptable Sureties on Federal Bonds and Acceptable Reinsuring Companies."

52.233-2 SERVICE OF PROTEST (AUG 1996)

(a) Protests, as defined in section 33.101 of the Federal Acquisition Regulation, that are filed directly with an agency, and copies of any protests that are filed with the General Accounting Office (GAO), shall be served on the Contracting Officer (addressed as follows) by obtaining written and dated acknowledgment of receipt from Patricia Bonilla, C/O Mary Ann Powers, P.O. Box 532711, Los Angeles, CA 90053-2325

(b) The copy of any protest shall be received in the office designated above within one day of filing a protest with the GAO.

(End of provision)

52.236-7 PERMITS AND RESPONSIBILITIES (NOV 1991)

The Contractor shall, without additional expense to the Government, be responsible for obtaining any necessary licenses and permits, and for complying with any Federal, State, and municipal laws, codes, and regulations applicable to the performance of the work. The Contractor shall also be responsible for all damages to persons or property that occur as a result of the Contractor's fault or negligence. The Contractor shall also be responsible for all materials delivered and work performed until completion and acceptance of the entire work, except for any completed unit of work which may have been accepted under the contract.

(End of clause)

52.236-27 SITE VISIT (CONSTRUCTION) (FEB 1995)

(a) The clauses at 52.236-2, Differing Site Conditions, and 52.236-3, Site Investigations and Conditions Affecting the Work, will be included in any contract awarded as a result of this solicitation. Accordingly, offerors or quoters are urged and expected to inspect the site where the work will be performed.

(b) No organized site visit is scheduled for this project.

(End of provision)

Section 00600
Representations & Certifications

52.203-2 CERTIFICATE OF INDEPENDENT PRICE DETERMINATION (APR 1985) 2
52.203-11 CERTIFICATION AND DISCLOSURE REGARDING PAYMENTS TO INFLUENCE CERTAIN FEDERAL TRANSACTIONS (APR 1991) 2
52.204-3 TAXPAYER IDENTIFICATION (OCT 1998) 3
52.204-5 WOMEN-OWNED BUSINESS (OTHER THAN SMALL BUSINESS) (MAY 1999) 4
52.204-6 DATA UNIVERSAL NUMBERING SYSTEM (DUNS) NUMBER (OCT 2003)..... 5
52.209-5 CERTIFICATION REGARDING DEBARMENT, SUSPENSION, PROPOSED DEBARMENT, AND OTHER RESPONSIBILITY MATTERS (DEC 2001) 5
52.219-1 SMALL BUSINESS PROGRAM REPRESENTATIONS (MAY 2004) 6
52.219-4 NOTICE OF PRICE EVALUATION PREFERENCE FOR HUBZONE SMALL BUSINESS CONCERNS (OCT 2004) 8
52.219-19 SMALL BUSINESS CONCERN REPRESENTATION FOR THE SMALL BUSINESS COMPETITIVENESS DEMONSTRATION PROGRAM (OCT 2000) 9
52.222-21 PROHIBITION OF SEGREGATED FACILITIES (FEB 1999) 10
52.222-22 PREVIOUS CONTRACTS AND COMPLIANCE REPORTS (FEB 1999) 10
52.223-13 CERTIFICATION OF TOXIC CHEMICAL RELEASE REPORTING (AUG 2003)..... 11
252.204-7001 COMMERCIAL AND GOVERNMENT ENTITY (CAGE) CODE REPORTING (AUG 1999)..... 12
252.209-7001 DISCLOSURE OF OWNERSHIP OR CONTROL BY THE GOVERNMENT OF A TERRORIST COUNTRY (SEP 2004)..... 12
252.209-7002 DISCLOSURE OF OWNERSHIP OR CONTROL BY A FOREIGN GOVERNMENT (SEP 1994) 13
252.209-7004 SUBCONTRACTING WITH FIRMS THAT ARE OWNED OR CONTROLLED BY THE GOVERNMENT OF A TERRORIST COUNTRY (MAR 1998)..... 14
252.225-7031 SECONDARY ARAB BOYCOTT OF ISRAEL (APR 2003) 14
252.247-7022 REPRESENTATION OF EXTENT OF TRANSPORTATION BY SEA (AUG 1992)..... 15

CLAUSES INCORPORATED BY FULL TEXT

52.203-2 CERTIFICATE OF INDEPENDENT PRICE DETERMINATION (APR 1985)

(a) The offeror certifies that --

(1) The prices in this offer have been arrived at independently, without, for the purpose of restricting competition, any consultation, communication, or agreement with any other offeror or competitor relating to –

(i) Those prices,

(ii) The intention to submit an offer, or

(iii) The methods of factors used to calculate the prices offered:

(2) The prices in this offer have not been and will not be knowingly disclosed by the offeror, directly or indirectly, to any other offeror or competitor before bid opening (in the case of a sealed bid solicitation) or contract award (in the case of a negotiated solicitation) unless otherwise required by law; and

(3) No attempt has been made or will be made by the offeror to induce any other concern to submit or not to submit an offer for the purpose of restricting competition.

(b) Each signature on the offer is considered to be a certification by the signatory that the signatory --

(1) Is the person in the offeror's organization responsible for determining the prices offered in this bid or proposal, and that the signatory has not participated and will not participate in any action contrary to subparagraphs (a)(1) through (a)(3) of this provision; or

(2) (i) Has been authorized, in writing, to act as agent for the following principals in certifying that those principals have not participated, and will not participate in any action contrary to subparagraphs (a)(1) through (a)(3) of this provison _____ (insert full name of person(s) in the offeror's organization responsible for determining the prices offered in this bid or proposal, and the title of his or her position in the offeror's organization);

(ii) As an authorized agent, does certify that the principals named in subdivision (b)(2)(i) above have not participated, and will not participate, in any action contrary to subparagraphs (a)(1) through (a)(3) above; and

(iii) As an agent, has not personally participated, and will not participate, in any action contrary to subparagraphs (a)(1) through (a)(3) of this provision.

(c) If the offeror deletes or modifies subparagraph (a)(2) of this provision, the offeror must furnish with its offer a signed statement setting forth in detail the circumstances of the disclosure.

(End of clause)

52.203-11 CERTIFICATION AND DISCLOSURE REGARDING PAYMENTS TO INFLUENCE CERTAIN FEDERAL TRANSACTIONS (APR 1991)

(a) The definitions and prohibitions contained in the clause, at FAR 52.203-12, Limitation on Payments to Influence Certain Federal Transactions, included in this solicitation, are hereby incorporated by reference in paragraph (b) of this Certification.

(b) The offeror, by signing its offer, hereby certifies to the best of his or her knowledge and belief that on or after December 23, 1989,--

(1) No Federal appropriated funds have been paid or will be paid to any person for influencing or attempting to influence an officer or employee of any agency, a Member of Congress, an officer or employee of Congress, or an employee of a Member of Congress on his or her behalf in connection with the awarding of any Federal contract, the making of any Federal grant, the making of any Federal loan, the entering into of any cooperative agreement, and the extension, continuation, renewal, amendment or modification of any Federal contract, grant, loan, or cooperative agreement;

(2) If any funds other than Federal appropriated funds (including profit or fee received under a covered Federal transaction) have been paid, or will be paid to any person for influencing or attempting to influence an officer or employee of any agency, a Member of Congress, an officer or employee of Congress or an employee of a Member of Congress on his or her behalf in connection with this solicitation, the offeror shall complete and submit, with its offer, OMB standard form LLL, Disclosure of Lobbying Activities, to the Contracting Officer; and

(3) He or she will include the language of this certification in all subcontract awards at any tier and require that all recipients of subcontract awards in excess of $100,000 shall certify and disclose accordingly.

(c) Submission of this certification and disclosure is a prerequisite for making or entering into this contract imposed by section 1352, title 31, United States Code. Any person who makes an expenditure prohibited under this provision, shall be subject to a civil penalty of not less than $10,000, and not more than $100,000, for each such failure.

(End of provision)

52.204-3 TAXPAYER IDENTIFICATION (OCT 1998)

(a) Definitions.

Common parent, as used in this provision, means that corporate entity that owns or controls an affiliated group of corporations that files its Federal income tax returns on a consolidated basis, and of which the offeror is a member.

Taxpayer Identification Number (TIN), as used in this provision, means the number required by the Internal Revenue Service (IRS) to be used by the offeror in reporting income tax and other returns. The TIN may be either a Social Security Number or an Employer Identification Number.

(b) All offerors must submit the information required in paragraphs (d) through (f) of this provision to comply with debt collection requirements of 31 U.S.C. 7701(c) and 3325(d), reporting requirements of 26 U.S.C. 6041, 6041A, and 6050M, and implementing regulations issued by the IRS. If the resulting contract is subject to the payment reporting requirements described in Federal Acquisition Regulation (FAR) 4.904, the failure or refusal by the offeror to furnish the information may result in a 31 percent reduction of payments otherwise due under the contract.

(c) The TIN may be used by the Government to collect and report on any delinquent amounts arising out of the offeror's relationship with the Government (31 U.S.C. 7701(c)(3)). If the resulting contract is subject to the payment reporting requirements described in FAR 4.904, the TIN provided hereunder may be matched with IRS records to verify the accuracy of the offeror's TIN.

(d) Taxpayer Identification Number (TIN).

___ TIN:.----------

___ TIN has been applied for.

___ TIN is not required because:

___ Offeror is a nonresident alien, foreign corporation, or foreign partnership that does not have income effectively connected with the conduct of a trade or business in the United States and does not have an office or place of business or a fiscal paying agent in the United States;

___ Offeror is an agency or instrumentality of a foreign government;

___ Offeror is an agency or instrumentality of the Federal Government.

(e) Type of organization.

___ Sole proprietorship;

___ Partnership;

___ Corporate entity (not tax-exempt);

___ Corporate entity (tax-exempt);

___ Government entity (Federal, State, or local);

___ Foreign government;

___ International organization per 26 CFR 1.6049-4;

___ Other----------

(f) Common parent.

___ Offeror is not owned or controlled by a common parent as defined in paragraph (a) of this provision.

___ Name and TIN of common parent:

Name----------

TIN----------

(End of provision)

52.204-5 WOMEN-OWNED BUSINESS (OTHER THAN SMALL BUSINESS) (MAY 1999)

(a) Definition. Women-owned business concern, as used in this provision, means a concern that is at least 51 percent owned by one or more women; or in the case of any publicly owned business, at least 51 percent of its stock is owned by one or more women; and whose management and daily business operations are controlled by one or more women.

(b) Representation. [Complete only if the offeror is a women-owned business concern and has not represented itself as a small business concern in paragraph (b)(1) of FAR 52.219-1, Small Business Program Representations, of this solicitation.] The offeror represents that it ( ) is a women-owned business concern.

(End of provision)

52.204-6 DATA UNIVERSAL NUMBERING SYSTEM (DUNS) NUMBER (OCT 2003)

(a) The offeror shall enter, in the block with its name and address on the cover page of its offer, the annotation “DUNS” or “DUNS+4” followed by the DUNS number or “DUNS+4” that identifies the offeror's name and address exactly as stated in the offer. The DUNS number is a nine-digit number assigned by Dun and Bradstreet, Inc. The DUNS+4 is the DUNS number plus a 4-character suffix that may be assigned at the discretion of the offeror to establish additional CCR records for identifying alternative Electronic Funds Transfer (EFT) accounts (see Subpart 32.11) for the same parent concern.

(b) If the offeror does not have a DUNS number, it should contact Dun and Bradstreet directly to obtain one.

(1) An offeror may obtain a DUNS number--

(i) If located within the United States, by calling Dun and Bradstreet at 1-866-705-5711 or via the Internet at http://www.dnb.com; or

(ii) If located outside the United States, by contacting the local Dun and Bradstreet office.

(2) The offeror should be prepared to provide the following information:

(i) Company legal business name.

(ii) Tradestyle, doing business, or other name by which your entity is commonly recognized.

(iii) Company physical street address, city, state and Zip Code.

(iv) Company mailing address, city, state and Zip Code (if separate from physical).

(v) Company telephone number.

(vi) Date the company was started.

(vii) Number of employees at your location.

(viii) Chief executive officer/key manager.

(ix) Line of business (industry).

(x) Company Headquarters name and address (reporting relationship within your entity).

(End of provision)

52.209-5 CERTIFICATION REGARDING DEBARMENT, SUSPENSION, PROPOSED DEBARMENT, AND OTHER RESPONSIBILITY MATTERS (DEC 2001)

(a)(1) The Offeror certifies, to the best of its knowledge and belief, that-

(i) The Offeror and/or any of its Principals-

(A) Are ( ) are not ( ) presently debarred, suspended, proposed for debarment, or declared ineligible for the award of contracts by any Federal agency;

(B) Have ( ) have not ( ), within a three-year period preceding this offer, been convicted of or had a civil judgment rendered against them for: commission of fraud or a criminal offense in connection with obtaining, attempting to obtain, or performing a public (Federal, state, or local) contract or subcontract; violation of Federal or state antitrust statutes relating to the submission of offers; or commission of embezzlement, theft, forgery, bribery, falsification or destruction of records, making false statements, tax evasion, or receiving stolen property; and

(C) Are ( ) are not ( ) presently indicted for, or otherwise criminally or civilly charged by a governmental entity with, commission of any of the offenses enumerated in paragraph (a)(1)(i)(B) of this provision.

(ii) The Offeror has ( ) has not ( ), within a three-year period preceding this offer, had one or more contracts terminated for default by any Federal agency.

(2) "Principals," for the purposes of this certification, means officers; directors; owners; partners; and, persons having primary management or supervisory responsibilities within a business entity (e.g., general manager; plant manager; head of a subsidiary, division, or business segment, and similar positions).

This Certification Concerns a Matter Within the Jurisdiction of an Agency of the United States and the Making of a False, Fictitious, or Fraudulent Certification May Render the Maker Subject to Prosecution Under Section 1001, Title 18, United States Code.

(b) The Offeror shall provide immediate written notice to the Contracting Officer if, at any time prior to contract award, the Offeror learns that its certification was erroneous when submitted or has become erroneous by reason of changed circumstances.

(c) A certification that any of the items in paragraph (a) of this provision exists will not necessarily result in withholding of an award under this solicitation. However, the certification will be considered in connection with a determination of the Offeror's responsibility. Failure of the Offeror to furnish a certification or provide such additional information as requested by the Contracting Officer may render the Offeror nonresponsible.

(d) Nothing contained in the foregoing shall be construed to require establishment of a system of records in order to render, in good faith, the certification required by paragraph (a) of this provision. The knowledge and information of an Offeror is not required to exceed that which is normally possessed by a prudent person in the ordinary course of business dealings.

(e) The certification in paragraph (a) of this provision is a material representation of fact upon which reliance was placed when making award. If it is later determined that the Offeror knowingly rendered an erroneous certification, in addition to other remedies available to the Government, the Contracting Officer may terminate the contract resulting from this solicitation for default.

(End of provision)

52.219-1 SMALL BUSINESS PROGRAM REPRESENTATIONS (MAY 2004)

(a)(1) The North American Industry Classification System (NAICS) code for this acquisition is 237990.

(2) The small business size standard is 17 million (insert size standard).

(3) The small business size standard for a concern which submits an offer in its own name, other than on a construction or service contract, but which proposes to furnish a product which it did not itself manufacture, is 500 employees.

(b) Representations. (1) The offeror represents as part of its offer that it ( ) is, ( ) is not a small business concern.

(2) (Complete only if the offeror represented itself as a small business concern in paragraph (b)(1) of this provision.) The offeror represents, for general statistical purposes, that it ( ) is, ( ) is not a small disadvantaged business concern as defined in 13 CFR 124.1002.

(3) (Complete only if the offeror represented itself as a small business concern in paragraph (b)(1) of this provision.) The offeror represents as part of its offer that it ( ) is, ( ) is not a women-owned small business concern.

(4) (Complete only if the offeror represented itself as a small business concern in paragraph (b)(1) of this provision.) The offeror represents as part of its offer that it ( ) is, ( ) is not a veteran-owned small business concern.

(5) (Complete only if the offeror represented itself as a veteran-owned small business concern in paragraph (b)(4) of this provision.) The offeror represents as part of its offer that it ( ) is, ( ) is not a service-disabled veteran-owned small business concern.

(6) (Complete only if the offeror represented itself as a small business concern in paragraph (b)(1) of this provision.) The offeror represents, as part of its offer, that--

(i) It ( ) is, ( ) is not a HUBZone small business concern listed, on the date of this representation, on the List of Qualified HUBZone Small Business Concerns maintained by the Small Business Administration, and no material change in ownership and control, principal office, or HUBZone employee percentage has occurred since it was certified by the Small Business Administration in accordance with 13 CFR part 126; and

(ii) It ( ) is, ( ) is not a joint venture that complies with the requirements of 13 CFR part 126, and the representation in paragraph (b)(6)(i) of this provision is accurate for the HUBZone small business concern or concerns that are participating in the joint venture. (The offeror shall enter the name or names of the HUBZone small business concern or concerns that are participating in the joint venture:_____.) Each HUBZone small business concern participating in the joint venture shall submit a separate signed copy of the HUBZone representation.

(c) Definitions. As used in this provision--

Service-disabled veteran-owned small business concern--

(1) Means a small business concern--

(i) Not less than 51 percent of which is owned by one or more service-disabled veterans or, in the case of any publicly owned business, not less than 51 percent of the stock of which is owned by one or more service-disabled veterans; and

(ii) The management and daily business operations of which are controlled by one or more service-disabled veterans or, in the case of a service-disabled veteran with permanent and severe disability, the spouse or permanent caregiver of such veteran.

(2) Service-disabled veteran means a veteran, as defined in 38 U.S.C. 101(2), with a disability that is service-connected, as defined in 38 U.S.C. 101(16).

"Small business concern," means a concern, including its affiliates, that is independently owned and operated, not dominant in the field of operation in which it is bidding on Government contracts, and qualified as a small business under the criteria in 13 CFR Part 121 and the size standard in paragraph (a) of this provision.

Veteran-owned small business concern means a small business concern--

(1) Not less than 51 percent of which is owned by one or more veterans (as defined at 38 U.S.C. 101(2)) or, in the case of any publicly owned business, not less than 51 percent of the stock of which is owned by one or more veterans; and

(2) The management and daily business operations of which are controlled by one or more veterans.

"Women-owned small business concern," means a small business concern --

(1) That is at least 51 percent owned by one or more women; in the case of any publicly owned business, at least 51 percent of the stock of which is owned by one or more women; and

(2) Whose management and daily business operations are controlled by one or more women.

(d) Notice.

(1) If this solicitation is for supplies and has been set aside, in whole or in part, for small business concerns, then the clause in this solicitation providing notice of the set-aside contains restrictions on the source of the end items to be furnished.

(2) Under 15 U.S.C. 645(d), any person who misrepresents a firm's status as a small, HUBZone small, small disadvantaged, or women-owned small business concern in order to obtain a contract to be awarded under the preference programs established pursuant to section 8(a), 8(d), 9, or 15 of the Small Business Act or any other provision of Federal law that specifically references section 8(d) for a definition of program eligibility, shall--

(i) Be punished by imposition of fine, imprisonment, or both;

(ii) Be subject to administrative remedies, including suspension and debarment; and

(iii) Be ineligible for participation in programs conducted under the authority of the Act.

(End of provision)

52.219-4 NOTICE OF PRICE EVALUATION PREFERENCE FOR HUBZONE SMALL BUSINESS CONCERNS (OCT 2004)

(a) Definition. HUBZone small business concern, as used in this clause, means a small business concern that appears on the List of Qualified HUBZone Small Business Concerns maintained by the Small Business Administration.

(b) Evaluation preference. (1) Offers will be evaluated by adding a factor of 10 percent to the price of all offers, except--

(i) Offers from HUBZone small business concerns that have not waived the evaluation preference;

(ii) Otherwise successful offers from small business concerns;

(iii) Otherwise successful offers of eligible products under the Trade Agreements Act when the dollar threshold for application of the Act is exceeded (see 25.402 of the Federal Acquisition Regulation (FAR)); and

(iv) Otherwise successful offers where application of the factor would be inconsistent with a Memorandum of Understanding or other international agreement with a foreign government.

(2) The factor of 10 percent shall be applied on a line item basis or to any group of items on which award may be made. Other evaluation factors described in the solicitation shall be applied before application of the factor.

(3) A concern that is both a HUBZone small business concern and a small disadvantaged business concern will receive the benefit of both the HUBZone small business price evaluation preference and the small disadvantaged business price evaluation adjustment (see FAR clause 52.219-23). Each applicable price evaluation preference or adjustment shall be calculated independently against an offeror's base offer.

These individual preference amounts shall be added together to arrive at the total evaluated price for that offer.

(c) Waiver of evaluation preference. A HUBZone small business concern may elect to waive the evaluation preference, in which case the factor will be added to its offer for evaluation purposes. The agreements in paragraph (d) of this clause do not apply if the offeror has waived the evaluation preference.

___ Offeror elects to waive the evaluation preference.

(d) Agreement. A HUBZone small business concern agrees that in the performance of the contract, in the case of a contract for

(1) Services (except construction), at least 50 percent of the cost of personnel for contract performance will be spent for employees of the concern or employees of other HUBZone small business concerns;

(2) Supplies (other than procurement from a nonmanufacturer of such supplies), at least 50 percent of the cost of manufacturing, excluding the cost of materials, will be performed by the concern or other HUBZone small business concerns;

(3) General construction, at least 15 percent of the cost of the contract performance incurred for personnel will be spent on the concern's employees or the employees of other HUBZone small business concerns; or

(4) Construction by special trade contractors, at least 25 percent of the cost of the contract performance incurred for personnel will be spent on the concern's employees or the employees of other HUBZone small business concerns.

(e) A HUBZone joint venture agrees that in the performance of the contract, the applicable percentage specified in paragraph (d) of this clause will be performed by the HUBZone small business participant or participants.

(f) A HUBZone small business concern nonmanufacturer agrees to furnish in performing this contract only end items manufactured or produced by HUBZone small business manufacturer concerns. This paragraph does not apply in connection with construction or service contracts.

(End of clause)

52.219-19 SMALL BUSINESS CONCERN REPRESENTATION FOR THE SMALL BUSINESS COMPETITIVENESS DEMONSTRATION PROGRAM (OCT 2000)

(a) Definition.

"Emerging small business" as used in this solicitation, means a small business concern whose size is no greater than 50 percent of the numerical size standard applicable to the North American Industry Classification System (NAICS) code assigned to a contracting opportunity.

(b) [Complete only if the Offeror has represented itself under the provision at 52.219-1 as a small business concern under the size standards of this solicitation.] The Offeror [ ] is, [ ] is not an emerging small

business.

(c) (Complete only if the Offeror is a small business or an emerging small business, indicating its size range.)

Offeror's number of employees for the past 12 months (check this column if size standard stated in solicitation is expressed in terms of number of employees) or Offeror's average annual gross revenue for the last 3 fiscal years (check this column if size standard stated in solicitation is expressed in terms of annual receipts). (Check one of the following.)

No. of Employees	Avg. Annual Gross Revenues
____ 50 or fewer	____ $1 million or less
____ 51 - 100	____ $1,000,001 - $2 million
____ 101 - 250	____ $2,000,001 - $3.5 million
____ 251 - 500	____ $3,500,001 - $5 million
____ 501 - 750	____ $5,000,001 - $10 million
____ 751 - 1,000	____ $10,000,001 - $17 million
____ Over 1,000	____ Over $17 million

(End of provision)

52.222-21 PROHIBITION OF SEGREGATED FACILITIES (FEB 1999)

(a) Segregated facilities, as used in this clause, means any waiting rooms, work areas, rest rooms and wash rooms, restaurants and other eating areas, time clocks, locker rooms and other storage or dressing areas, parking lots, drinking fountains, recreation or entertainment areas, transportation, and housing facilities provided for employees, that are segregated by explicit directive or are in fact segregated on the basis of race, color, religion, sex, or national origin because of written or oral policies or employee custom. The term does not include separate or single-user rest rooms or necessary dressing or sleeping areas provided to assure privacy between the sexes.

(b) The Contractor agrees that it does not and will not maintain or provide for its employees any segregated facilities at any of its establishments, and that it does not and will not permit its employees to perform their services at any location under its control where segregated facilities are maintained. The Contractor agrees that a breach of this clause is a violation of the Equal Opportunity clause in this contract.

(c) The Contractor shall include this clause in every subcontract and purchase order that is subject to the Equal Opportunity clause of this contract.

(End of clause)

52.222-22 PREVIOUS CONTRACTS AND COMPLIANCE REPORTS (FEB 1999)

The offeror represents that --

(a) ( ) It has, ( ) has not participated in a previous contract or subcontract subject to the Equal Opportunity clause of this solicitation;

(b) ( ) It has, ( ) has not, filed all required compliance reports; and

(c) Representations indicating submission of required compliance reports, signed by proposed subcontractors, will be obtained before subcontract awards.

(End of provision)

52.223-13 CERTIFICATION OF TOXIC CHEMICAL RELEASE REPORTING (AUG 2003)

(a) Executive Order 13148, of April 21, 2000, Greening the Government through Leadership in Environmental Management, requires submission of this certification as a prerequisite for contract award.

(b) By signing this offer, the offeror certifies that--

(1) As the owner or operator of facilities that will be used in the performance of this contract that are subject to the filing and reporting requirements described in section 313 of the Emergency Planning and Community Right-to-Know Act of 1986 (EPCRA) (42 U.S.C. 11023) and section 6607 of the Pollution Prevention Act of 1990 (PPA) (42 U.S.C. 13106), the offeror will file and continue to file for such facilities for the life of the contract the Toxic Chemical Release Inventory Form (Form R) as described in sections 313(a) and (g) of EPCRA and section 6607 of PPA; or

(2) None of its owned or operated facilities to be used in the performance of this contract is subject to the Form R filing and reporting requirements because each such facility is exempt for at least one of the following reasons: (Check each block that is applicable.)

( ) (i) The facility does not manufacture, process, or otherwise use any toxic chemicals listed in 40 CFR 372.65;

( ) (ii) The facility does not have 10 or more full-time employees as specified in section 313.(b)(1)(A) of EPCRA 42 U.S.C. 11023(b)(1)(A);

( ) (iii) The facility does not meet the reporting thresholds of toxic chemicals established under section 313(f) of EPCRA, 42 U.S.C. 11023(f) (including the alternate thresholds at 40 CFR 372.27, provided an appropriate certification form has been filed with EPA);

( ) (iv) The facility does not fall within the following Standard Industrial Classification (SIC) codes or their corresponding North American Industry Classification System sectors:

(A) Major group code 10 (except 1011, 1081, and 1094.

(B) Major group code 12 (except 1241).

(C) Major group codes 20 through 39.

(D) Industry code 4911, 4931, or 4939 (limited to facilities that combust coal and/or oil for the purpose of generating power for distribution in commerce).

(E) Industry code 4953 (limited to facilities regulated under the Resource Conservation and Recovery Act, Subtitle C (42 U.S.C. 6921, et seq.), 5169, 5171, or 7389 (limited to facilities primarily engaged in solvent recovery services on a contract or fee basis); or

( ) (v) The facility is not located within the United States or its outlying areas.

(End of clause)

252.204-7001 COMMERCIAL AND GOVERNMENT ENTITY (CAGE) CODE REPORTING (AUG 1999)

(a) The offeror is requested to enter its CAGE code on its offer in the block with its name and address. The CAGE code entered must be for that name and address. Enter “CAGE” before the number.

(b) If the offeror does not have a CAGE code, it may ask the Contracting Officer to request one from the Defense Logistics Information Service (DLIS). The Contracting Officer will--

(1) Ask the Contractor to complete section B of a DD Form 2051, Request for Assignment of a Commercial and Government Entity (CAGE) Code;

(2) Complete section A and forward the form to DLIS; and

(3) Notify the Contractor of its assigned CAGE code.

(c) Do not delay submission of the offer pending receipt of a CAGE code.

(End of provision)

252.209-7001 DISCLOSURE OF OWNERSHIP OR CONTROL BY THE GOVERNMENT OF A TERRORIST COUNTRY (SEP 2004)

(a) "Definitions."

As used in this provision --

(a) "Government of a terrorist country" includes the state and the government of a terrorist country, as well as any political subdivision, agency, or instrumentality thereof.

(2) "Terrorist country" means a country determined by the Secretary of State, under section 6(j)(1)(A) of the Export Administration Act of 1979 (50 U.S.C. App. 2405(j)(i)(A)), to be a country the government of which has repeatedly provided support for such acts of international terrorism. As of the date of this provision, terrorist countries subject to this provision include: Cuba, Iran, Libya, North Korea, Sudan, and Syria.

(3) "Significant interest" means --

(i) Ownership of or beneficial interest in 5 percent or more of the firm's or subsidiary's securities. Beneficial interest includes holding 5 percent or more of any class of the firm's securities in "nominee shares," "street names," or some other method of holding securities that does not disclose the beneficial owner;

(ii) Holding a management position in the firm, such as a director or officer;

(iii) Ability to control or influence the election, appointment, or tenure of directors or officers in the firm;

(iv) Ownership of 10 percent or more of the assets of a firm such as equipment, buildings, real estate, or other tangible assets of the firm; or

(v) Holding 50 percent or more of the indebtness of a firm.

(b) "Prohibition on award."

In accordance with 10 U.S.C. 2327, no contract may be awarded to a firm or a subsidiary of a firm if the government of a terrorist country has a significant interest in the firm or subsidiary or, in the case of a

subsidiary, the firm that owns the subsidiary, unless a waiver is granted by the Secretary of Defense.

(c) "Disclosure."

If the government of a terrorist country has a significant interest in the Offeror or a subsidiary of the Offeror, the Offeror shall disclosure such interest in an attachment to its offer. If the Offeror is a subsidiary, it shall also disclose any significant interest the government of a terrorist country has in any firm that owns or controls the subsidiary. The disclosure shall include --

(1) Identification of each government holding a significant interest; and

(2) A description of the significant interest held by each government.

(End of provision)

252.209-7002 DISCLOSURE OF OWNERSHIP OR CONTROL BY A FOREIGN GOVERNMENT (SEP 1994)

(a) Definitions. As used in this provision--

(1) "Entity controlled by a foreign government" means--

(i) Any domestic or foreign organization or corporation that is effectively owned or controlled by a foreign government; or

(ii) Any individual acting on behalf of a foreign government.

(2) "Effectively owned or controlled" means that a foreign government or any entity controlled by a foreign government has the power, either directly or indirectly, whether exercised or exercisable, to control or influence the election or appointment of the Offeror's officers, directors, partners, regents, trustees, or a majority of the Offeror's board of directors by means, e.g., ownership, contract, or operation of law.

(3) "Foreign government" means any governing body organized and existing under the laws of any country other than the United States and its possessions and trust territories and any agent or instrumentality of that government.

(4) "Proscribed information" means--

(i) Top Secret information;

(ii) Communications Security (COMSEC) information, except classified keys used to operate secure telephone unites (STU IIIs);

(iii) Restricted Data as defined in the U.S. Atomic Energy Act of 1954, as amended;

(iv) Special Access Program (SAP) information; or

(v) Sensitive Compartmental Information (SCI).

(b) Prohibition on award. No contract under a national security program may be awarded to a company owned by an entity controlled by a foreign government if that company requires access to proscribed information to perform the contract, unless the Secretary of Defense or designee has waived application of 10 U.S.C.2536(a).

(c) Disclosure.
The Offeror shall disclose any interest a foreign government has in the Offeror when that interest

constitutes control by a foreign government as defined in this provision. If the Offeror is a subsidiary, it shall also disclose any reportable interest a foreign government has in any entity that owns or controls the subsidiary, including reportable interest concerning the Offeror's immediate parent, intermediate parents, and the ultimate parent. Use separate paper as needed, and provide the information in the following format:

Offeror's Point of Contact for Questions about Disclosure
(Name and Phone Number with Country Code, City Code and Area Code, as applicable)

Name and Address of Offeror

Name and Address of Entity Controlled by a Foreign Government	Description of Interest, Ownership Percentage, and Identification of Foreign Government

(End of provision)

252.209-7004 SUBCONTRACTING WITH FIRMS THAT ARE OWNED OR CONTROLLED BY THE GOVERNMENT OF A TERRORIST COUNTRY (MAR 1998)

(a) Unless the Government determines that there is a compelling reason to do so, the Contractor shall not enter into any subcontract in excess of $25,000 with a firm, or subsidiary of a firm, that is identified, on the List of Parties Excluded from Federal Procurement and Nonprocurement Programs, as being ineligible for the award of Defense contracts or subcontracts because it is owned or controlled by the government of a terrorist country.

(b) A corporate officer or a designee of the Contractor shall notify the Contracting Officer, in writing, before entering into a subcontract with a party that is identified, on the List of Parties Excluded from Federal Procurement and Nonprocurement Programs, as being ineligible for the award of Defense contracts or subcontracts because it is owned or controlled by the government of a terrorist country. The notice must include the name of the proposed subcontractor notwithstanding its inclusion on the List of Parties Excluded From Federal Procurement and Nonprocurement Programs.

(End of clause)

252.225-7031 SECONDARY ARAB BOYCOTT OF ISRAEL (APR 2003)

(a) Definitions. As used in this provision--

(1) Foreign person means any person (including any individual, partnership, corporation, or other form of association) other than a United States person.

(2) United States person is defined in 50 U.S.C. App. 2415(2) and means--

(i) Any United States resident or national (other than an individual resident outside the United States who is employed by other than a United States person);

(ii) Any domestic concern (including any permanent domestic establishment of any foreign concern); and

(iii) Any foreign subsidiary or affiliate (including any permanent foreign establishment) of any domestic concern that is controlled in fact by such domestic concern.

(b) Certification. If the offeror is a foreign person, the offeror certifies, by submission of an offer, that it--

(1) Does not comply with the Secondary Arab Boycott of Israel; and

(2) Is not taking or knowingly agreeing to take any action, with respect to the Secondary Boycott of Israel by Arab countries, which 50 U.S.C. App. 2407(a) prohibits a United States person from taking.

(End of provision)

252.247-7022 REPRESENTATION OF EXTENT OF TRANSPORTATION BY SEA (AUG 1992)

(a) The Offeror shall indicate by checking the appropriate blank in paragraph (b) of this provision whether transportation of supplies by sea is anticipated under the resultant contract. The term supplies is defined in the Transportation of Supplies by Sea clause of this solicitation.

(b) Representation. The Offeror represents that it:

____ (1) Does anticipate that supplies will be transported by sea in the performance of any contract or subcontract resulting from this solicitation.

____ (2) Does not anticipate that supplies will be transported by sea in the performance of any contract or subcontract resulting from this solicitation.

(c) Any contract resulting from this solicitation will include the Transportation of Supplies by Sea clause. If the Offeror represents that it will not use ocean transportation, the resulting contract will also include the Defense FAR Supplement clause at 252.247-7024, Notification of Transportation of Supplies by Sea.

(End of provision)

Section 00700
Contract Clauses

Section 00700 ... 1
Contract Clauses ... 1
52.202-1 DEFINITIONS (JUL 2004) ... 4
52.203-3 GRATUITIES (APR 1984) ... 4
52.203-5 COVENANT AGAINST CONTINGENT FEES (APR 1984) ... 4
52.203-6 RESTRICTIONS ON SUBCONTRACTOR SALES TO THE GOVERNMENT (JUL 1995) ... 5
52.203-7 Anti-Kickback Procedures. (JUL 1995) ... 5
52.203-8 CANCELLATION, RESCISSION, AND RECOVERY OF FUNDS FOR ILLEGAL OR IMPROPER ACTIVITY (JAN 1997) ... 6
52.203-10 PRICE OR FEE ADJUSTMENT FOR ILLEGAL OR IMPROPER ACTIVITY (JAN 1997) ... 7
52.203-12 LIMITATION ON PAYMENTS TO INFLUENCE CERTAIN FEDERAL TRANSACTIONS (JUN 2003) ... 8
52.204-4 PRINTED OR COPIED DOUBLE-SIDED ON RECYCLED PAPER (AUG 2000) ... 12
52.204-6 DATA UNIVERSAL NUMBERING SYSTEM (DUNS) NUMBER (OCT 2003) ... 13
52.214-26 Audit and Records--Sealed Bidding. (OCT 1997) ... 14
52.214-27 Price Reduction for Defective Cost or Pricing Data - Modifications - Sealed Bidding. (OCT 1997) ... 14
52.214-28 Subcontractor Cost or Pricing Data - Modifications - Sealed Bidding. (OCT 1997) ... 16
52.219-8 UTILIZATION OF SMALL BUSINESS CONCERNS (MAY 2004) ... 17
52.219-9 SMALL BUSINESS SUBCONTRACTING PLAN (JAN 2002) ... 18
52.219-14 LIMITATIONS ON SUBCONTRACTING (DEC 1996) ... 23
52.219-16 Liquidated Damages-Subcontracting Plan (JAN 1999) ... 23
52.222-3 Convict Labor (JUN 2003) ... 24
52.222-4 Contract Work Hours and Safety Standards Act - Overtime Compensation. (SEP 2000) ... 24
52.222-6 DAVIS-BACON ACT (FEB 1995) ... 25
52.222-7 WITHHOLDING OF FUNDS (FEB 1988) ... 26
52.222-8 PAYROLLS AND BASIC RECORDS (FEB 1988) ... 27
52.222-9 APPRENTICES AND TRAINEES (FEB 1988) ... 28
52.222-10 COMPLIANCE WITH COPELAND ACT REQUIREMENTS (FEB 1988) ... 29
52.222-11 SUBCONTRACTS (LABOR STANDARDS (FEB 1988) ... 29
52.222-12 CONTRACT TERMINATION--DEBARMENT (FEB 1988) ... 29
52.222-13 COMPLIANCE WITH DAVIS-BACON AND RELATED ACT REGULATIONS (FEB 1988) ... 30
52.222-14 DISPUTES CONCERNING LABOR STANDARDS (FEB 1988) ... 30
52.222-15 CERTIFICATION OF ELIGIBILITY (FEB 1988) ... 30
52.222-26 EQUAL OPPORTUNITY (APR 2002) ... 30
52.222-27 AFFIRMATIVE ACTION COMPLIANCE REQUIREMENTS FOR CONSTRUCTION (FEB 1999) ... 32
52.222-35 EQUAL OPPORTUNITY FOR SPECIAL DISABLED VETERANS, VETERANS OF THE VIETNAM ERA, AND OTHER ELIGIBLE VETERANS (DEC 2001) ... 35
52.222-36 AFFIRMATIVE ACTION FOR WORKERS WITH DISABILITIES (JUN 1998) ... 38
52.222-37 EMPLOYMENT REPORTS ON SPECIAL DISABLED VETERANS, VETERANS OF THE VIETNAM ERA, AND OTHER ELIGIBLE VETERANS (DEC 2001) ... 39
52.222-38 COMPLIANCE WITH VETERANS' EMPLOYMENT REPORTING REQUIREMENTS (DEC 2001) ... 40
52.223-3 HAZARDOUS MATERIAL IDENTIFICATION AND MATERIAL SAFETY DATA (JAN 1997) ... 40
52.223-5 POLLUTION PREVENTION AND RIGHT-TO-KNOW INFORMATION (AUG 2003) ... 41
52.223-14 TOXIC CHEMICAL RELEASE REPORTING (AUG 2003) ... 44
52.225-13 RESTRICTIONS ON CERTAIN FOREIGN PURCHASES (MAR 2005) ... 45
52.225-14 INCONSISTENCY BETWEEN ENGLISH VERSION AND TRANSLATION OF CONTRACT (FEB 2000) ... 45

52.226-1 UTILIZATION OF INDIAN ORGANIZATIONS AND INDIAN-OWNED ECONOMIC ENTERPRISES (JUN 2000) 45
52.227-1 Authorization and Consent (JUL 1995) 46
52.227-2 NOTICE AND ASSISTANCE REGARDING PATENT AND COPYRIGHT INFRINGEMENT (AUG 1996) 47
52.227-4 PATENT INDEMNITY--CONSTRUCTION CONTRACTS (APR 1984) 47
52.228-2 ADDITIONAL BOND SECURITY (OCT 1997) 47
52.228-11 PLEDGES OF ASSETS (FEB 1992) 48
52.229-3 FEDERAL, STATE, AND LOCAL TAXES (APR 2003) 48
52.232-5 PAYMENTS UNDER FIXED-PRICE CONSTRUCTION CONTRACTS (SEP 2002) 49
52.232-17 INTEREST (JUNE 1996) 52
52.232-23 ASSIGNMENT OF CLAIMS (JAN 1986) 52
52.232-27 PROMPT PAYMENT FOR CONSTRUCTION CONTRACTS (OCT 2003) 52
52.233-3 PROTEST AFTER AWARD (AUG. 1996) 60
52.236-2 DIFFERING SITE CONDITIONS (APR 1984) 61
52.236-3 SITE INVESTIGATION AND CONDITIONS AFFECTING THE WORK (APR 1984) 61
52.236-5 MATERIAL AND WORKMANSHIP (APR 1984) 62
52.236-6 SUPERINTENDENCE BY THE CONTRACTOR (APR 1984) 62
52.236-7 PERMITS AND RESPONSIBILITIES (NOV 1991) 62
52.236-8 OTHER CONTRACTS (APR 1984) 63
52.236-9 PROTECTION OF EXISTING VEGETATION, STRUCTURES, EQUIPMENT, UTILITIES, AND IMPROVEMENTS (APR 1984) 63
52.236-10 OPERATIONS AND STORAGE AREAS (APR 1984) 63
52.236-11 USE AND POSSESSION PRIOR TO COMPLETION (APR 1984) 64
52.236-12 CLEANING UP (APR 1984) 64
52.236-13 ACCIDENT PREVENTION (NOV 1991) 64
52.236-15 SCHEDULES FOR CONSTRUCTION CONTRACTS (APR 1984) 65
52.236-17 LAYOUT OF WORK (APR 1984) 65
52.236-21 SPECIFICATIONS AND DRAWINGS FOR CONSTRUCTION (FEB 1997) 66
52.236-26 PRECONSTRUCTION CONFERENCE (FEB 1995) 67
52.242-13 BANKRUPTCY (JUL 1995) 67
52.242-14 SUSPENSION OF WORK (APR 1984) 67
52.243-3 CHANGES--TIME-AND-MATERIALS OR LABOR-HOURS (SEP 2000) 67
52.243-4 CHANGES (AUG 1987) 68
52.245-2 GOVERNMENT PROPERTY (FIXED-PRICE CONTRACTS) (MAY 2004) 69
52.246-12 INSPECTION OF CONSTRUCTION (AUG 1996) 74
52.246-21 WARRANTY OF CONSTRUCTION (MAR 1994) 75
52.248-3 VALUE ENGINEERING--CONSTRUCTION (FEB 2000) 76
52.249-2 TERMINATION FOR CONVENIENCE OF THE GOVERNMENT (FIXED-PRICE) (MAY 2004) 78
52.249-10 DEFAULT (FIXED-PRICE CONSTRUCTION) (APR 1984) 81
52.252-2 CLAUSES INCORPORATED BY REFERENCE (FEB 1998) 82
52.252-3 ALTERATIONS IN SOLICITATION (APR 1984) 83
52.252-4 ALTERATIONS IN CONTRACT (APR 1984) 83
52.252-6 AUTHORIZED DEVIATIONS IN CLAUSES (APR 1984) 83
52.253-1 COMPUTER GENERATED FORMS (JAN 1991) 83
252.201-7000 CONTRACTING OFFICER'S REPRESENTATIVE (DEC 1991) 83
252.203-7001 PROHIBITION ON PERSONS CONVICTED OF FRAUD OR OTHER DEFENSE-CONTRACT-RELATED FELONIES (DEC 2004) 84
252.203-7002 DISPLAY OF DOD HOTLINE POSTER (DEC 1991) 85
252.204-7000 DISCLOSURE OF INFORMATION (DEC 1991) 85
252.204-7003 CONTROL OF GOVERNMENT PERSONNEL WORK PRODUCT (APR 1992) 86
252.209-7004 SUBCONTRACTING WITH FIRMS THAT ARE OWNED OR CONTROLLED BY THE GOVERNMENT OF A TERRORIST COUNTRY (MAR 1998) 86
252.219-7003 SMALL, SMALL DISADVANTAGED AND WOMEN-OWNED SMALL BUSINESS SUBCONTRACTING PLAN (DOD CONTRACTS) (APR. 1996) 86

252.223-7006 PROHIBITION ON STORAGE AND DISPOSAL OF TOXIC AND HAZARDOUS..... 87
MATERIALS (APR 1993)..... 87
252.225-7012 Preference for Certain Domestic Commodities (JUN 2004)..... 88
252.225-7031 SECONDARY ARAB BOYCOTT OF ISRAEL (APR 2003) 89
252.227-7000 Non-estoppel. (OCT 1966)..... 90
252.227-7022 GOVERNMENT RIGHTS (UNLIMITED) (MAR 1979) 90
252.227-7023 DRAWINGS AND OTHER DATA TO BECOME PROPERTY OF GOVERNMENT.
(MAR 1979) 90
252.227-7033 RIGHTS IN SHOP DRAWINGS (APR 1966) 90
252.231-7000 SUPPLEMENTAL COST PRINCIPLES (DEC 1991)..... 91
252.236-7000 MODIFICATION PROPOSALS - PRICE BREAKDOWN. (DEC 1991) 91
252.236-7008 CONTRACT PRICES - BIDDING SCHEDULES. (DEC 1991) 91
252.242-7000 POSTAWARD CONFERENCE (DEC 1991) 91
252.243-7001 PRICING OF CONTRACT MODIFICATIONS (DEC 1991)..... 92
252.243-7002 REQUESTS FOR EQUITABLE ADJUSTMENT (MAR 1998)..... 92

CLAUSES INCORPORATED BY FULL TEXT

52.202-1 DEFINITIONS (JUL 2004)

(a) When a solicitation provision or contract clause uses a word or term that is defined in the Federal Acquisition Regulation (FAR), the word or term has the same meaning as the definition in FAR 2.101 in effect at the time the solicitation was issued, unless--

(1) The solicitation, or amended solicitation, provides a different definition;

(2) The contracting parties agree to a different definition;

(3) The part, subpart, or section of the FAR where the provision or clause is prescribed provides a different meaning; or

(4) The word or term is defined in FAR Part 31, for use in the cost principles and procedures.

(b) The FAR Index is a guide to words and terms the FAR defines and shows where each definition is located. The FAR Index is available via the Internet at http://www.acqnet.gov at the end of the FAR, after the FAR Appendix.

(End of clause)

52.203-3 GRATUITIES (APR 1984)

(a) The right of the Contractor to proceed may be terminated by written notice if, after notice and hearing, the agency head or a designee determines that the Contractor, its agent, or another representative--

(1) Offered or gave a gratuity (e.g., an entertainment or gift) to an officer, official, or employee of the Government; and

(2) Intended, by the gratuity, to obtain a contract or favorable treatment under a contract.

(b) The facts supporting this determination may be reviewed by any court having lawful jurisdiction.

(c) If this contract is terminated under paragraph (a) of this clause, the Government is entitled--

(1) To pursue the same remedies as in a breach of the contract; and

(2) In addition to any other damages provided by law, to exemplary damages of not less than 3 nor more than 10 times the cost incurred by the Contractor in giving gratuities to the person concerned, as determined by the agency head or a designee. (This subparagraph (c)(2) is applicable only if this contract uses money appropriated to the Department of Defense.)

(d) The rights and remedies of the Government provided in this clause shall not be exclusive and are in addition to any other rights and remedies provided by law or under this contract.

(End of clause)

52.203-5 COVENANT AGAINST CONTINGENT FEES (APR 1984)

(a) The Contractor warrants that no person or agency has been employed or retained to solicit or obtain this contract upon an agreement or understanding for a contingent fee, except a bona fide employee or agency. For breach or violation of this warranty, the Government shall have the right to annul this contract without liability or, in its discretion, to deduct from the contract price or consideration, or otherwise recover, the

full amount of the contingent fee.

(b) "Bona fide agency," as used in this clause, means an established commercial or selling agency, maintained by a contractor for the purpose of securing business, that neither exerts nor proposes to exert improper influence to solicit or obtain Government contracts nor holds itself out as being able to obtain any Government contract or contracts through improper influence.

"Bona fide employee," as used in this clause, means a person, employed by a contractor and subject to the contractor's supervision and control as to time, place, and manner of performance, who neither exerts nor proposes to exert improper influence to solicit or obtain Government contracts nor holds out as being able to obtain any Government contract or contracts through improper influence.

"Contingent fee," as used in this clause, means any commission, percentage, brokerage, or other fee that is contingent upon the success that a person or concern has in securing a Government contract.

"Improper influence," as used in this clause, means any influence that induces or tends to induce a Government employee or officer to give consideration or to act regarding a Government contract on any basis other than the merits of the matter.

(End of clause)

52.203-6 RESTRICTIONS ON SUBCONTRACTOR SALES TO THE GOVERNMENT (JUL 1995)

(a) Except as provided in (b) of this clause, the Contractor shall not enter into any agreement with an actual or prospective subcontractor, nor otherwise act in any manner, which has or may have the effect of restricting sales by such subcontractors directly to the Government of any item or process (including computer software) made or furnished by the subcontractor under this contract or under any follow-on production contract.

(b) The prohibition in (a) of this clause does not preclude the Contractor from asserting rights that are otherwise authorized by law or regulation.

(c) The Contractor agrees to incorporate the substance of this clause, including this paragraph (c), in all subcontracts under this contract which exceed $100,000.

52.203-7 Anti-Kickback Procedures. (JUL 1995)

(a) Definitions.

"Kickback," as used in this clause, means any money, fee, commission, credit, gift, gratuity, thing of value, or compensation of any kind which is provided, directly or indirectly, to any prime Contractor, prime Contractor employee, subcontractor, or subcontractor employee for the purpose of improperly obtaining or rewarding favorable treatment in connection with a prime contract or in connection with a subcontract relating to a prime contract.

"Person," as used in this clause, means a corporation, partnership, business association of any kind, trust, joint-stock company, or individual.

"Prime contract," as used in this clause, means a contract or contractual action entered into by the United States for the purpose of obtaining supplies, materials, equipment, or services of any kind.

"Prime Contractor," as used in this clause, means a person who has entered into a prime contract with the United States.

"Prime Contractor employee," as used in this clause, means any officer, partner, employee, or agent of a prime Contractor.

"Subcontract," as used in this clause, means a contract or contractual action entered into by a prime Contractor or subcontractor for the purpose of obtaining supplies, materials, equipment, or services of any kind under a prime contract.

"Subcontractor," as used in this clause, (1) means any person, other than the prime Contractor, who offers to furnish or furnishes any supplies, materials, equipment, or services of any kind under a prime contract or a subcontract entered into in connection with such prime contract, and (2) includes any person who offers to furnish or furnishes general supplies to the prime Contractor or a higher tier subcontractor.

"Subcontractor employee," as used in this clause, means any officer, partner, employee, or agent of a subcontractor.

(b) The Anti-Kickback Act of 1986 (41 U.S.C. 51-58) (the Act), prohibits any person from -

(1) Providing or attempting to provide or offering to provide any kickback;

(2) Soliciting, accepting, or attempting to accept any kickback; or

(3) Including, directly or indirectly, the amount of any kickback in the contract price charged by a prime Contractor to the United States or in the contract price charged by a subcontractor to a prime Contractor or higher tier subcontractor.

(c)(1) The Contractor shall have in place and follow reasonable procedures designed to prevent and detect possible violations described in paragraph (b) of this clause in its own operations and direct business relationships.

(2) When the Contractor has reasonable grounds to believe that a violation described in paragraph (b) of this clause may have occurred, the Contractor shall promptly report in writing the possible violation. Such reports shall be made to the inspector general of the contracting agency, the head of the contracting agency if the agency does not have an inspector general, or the Department of Justice.

(3) The Contractor shall cooperate fully with any Federal agency investigating a possible violation described in paragraph (b) of this clause.

(4) The Contracting Officer may (i) offset the amount of the kickback against any monies owed by the United States under the prime contract and/or (ii) direct that the Prime Contractor withhold, from sums owed a subcontractor under the prime contract, the amount of any kickback. The Contracting Officer may order the monies withheld under subdivision (c)(4)(ii) of this clause be paid over to the Government unless the Government has already offset those monies under subdivision (c)(4)(i) of this clause. In either case, the Prime Contractor shall notify the Contracting Officer when the monies are withheld.

(5) The Contractor agrees to incorporate the substance of this clause, including this subparagraph (c)(5) but excepting subparagraph (c)(1), in all subcontracts under this contract which exceed $100,000.

52.203-8 CANCELLATION, RESCISSION, AND RECOVERY OF FUNDS FOR ILLEGAL OR IMPROPER ACTIVITY (JAN 1997)

(a) If the Government receives information that a contractor or a person has engaged in conduct constituting a violation of subsection (a), (b), (c), or (d) of Section 27 of the Office of Federal Procurement Policy Act (41 U.S.C. 423) (the Act), as amended by section 4304 of the 1996 National Defense Authorization Act for Fiscal Year 1996 (Pub. L. 104-106), the Government may--

(1) Cancel the solicitation, if the contract has not yet been awarded or issued; or

(2) Rescind the contract with respect to which--

(i) The Contractor or someone acting for the Contractor has been convicted for an offense where the conduct constitutes a violation of subsection 27(a) or (b) of the Act for the purpose of either--

(A) Exchanging the information covered by such subsections for anything of value; or

(B) Obtaining or giving anyone a competitive advantage in the award of a Federal agency procurement contract; or

(ii) The head of the contracting activity has determined, based upon a preponderance of the evidence, that the Contractor or someone acting for the Contractor has engaged in conduct constituting an offense punishable under subsections 27(e)(1) of the Act.

(b) If the Government rescinds the contract under paragraph (a) of this clause, the Government is entitled to recover, in addition to any penalty prescribed by law, the amount expended under the contract.

(c) The rights and remedies of the Government specified herein are not exclusive, and are in addition to any other rights and remedies provided by law, regulation, or under this contract.

(End of clause)

52.203-10 PRICE OR FEE ADJUSTMENT FOR ILLEGAL OR IMPROPER ACTIVITY (JAN 1997)

(a) The Government, at its election, may reduce the price of a fixed-price type contract and the total cost and fee under a cost-type contract by the amount of profit or fee determined as set forth in paragraph (b) of this clause if the head of the contracting activity or designee determines that there was a violation of subsection 27 (a), (b), or (c) of the Office of Federal Procurement Policy Act, as amended (41 U.S.C. 423), as implemented in section 3.104 of the Federal Acquisition Regulation.

(b) The price or fee reduction referred to in paragraph (a) of this clause shall be--

(1) For cost-plus-fixed-fee contracts, the amount of the fee specified in the contract at the time of award;

(2) For cost-plus-incentive-fee contracts, the target fee specified in the contract at the time of award, notwithstanding any minimum fee or "fee floor" specified in the contract;

(3) For cost-plus-award-fee contracts--

(i) The base fee established in the contract at the time of contract award;

(ii) If no base fee is specified in the contract, 30 percent of the amount of each award fee otherwise payable to the Contractor for each award fee evaluation period or at each award fee determination point.

(4) For fixed-price-incentive contracts, the Government may--

(i) Reduce the contract target price and contract target profit both by an amount equal to the initial target profit specified in the contract at the time of contract award; or

(ii) If an immediate adjustment to the contract target price and contract target profit would have a significant adverse impact on the incentive price revision relationship under the contract, or adversely affect the contract financing provisions, the Contracting Officer may defer such adjustment until establishment of the total final price of the contract. The total final price established in accordance with the incentive price revision provisions of the contract shall be reduced by an amount equal to the initial target profit specified in the contract at the time of contract award and such reduced price shall be the total final contract price.

(5) For firm-fixed-price contracts, by 10 percent of the initial contract price or a profit amount determined by the Contracting Officer from records or documents in existence prior to the date of the contract award.

(c) The Government may, at its election, reduce a prime contractor's price or fee in accordance with the procedures of paragraph (b) of this clause for violations of the Act by its subcontractors by an amount not to exceed the amount of profit or fee reflected in the subcontract at the time the subcontract was first definitively priced.

(d) In addition to the remedies in paragraphs (a) and (c) of this clause, the Government may terminate this contract for default. The rights and remedies of the Government specified herein are not exclusive, and are in addition to any other rights and remedies provided by law or under this contract.

(End of clause)

52.203-12 LIMITATION ON PAYMENTS TO INFLUENCE CERTAIN FEDERAL TRANSACTIONS (JUN 2003)

(a) Definitions.

"Agency," as used in this clause, means executive agency as defined in 2.101.

"Covered Federal action," as used in this clause, means any of the following Federal actions:

(1) The awarding of any Federal contract.

(2) The making of any Federal grant.

(3) The making of any Federal loan.

(4) The entering into of any cooperative agreement.

(5) The extension, continuation, renewal, amendment, or modification of any Federal contract, grant, loan, or cooperative agreement.

"Indian tribe" and "tribal organization," as used in this clause, have the meaning provided in section 4 of the Indian Self-Determination and Education Assistance Act (25 U.S.C. 450B) and include Alaskan Natives.

"Influencing or attempting to influence," as used in this clause, means making, with the intent to influence, any communication to or appearance before an officer or employee of any agency, a Member of Congress, an officer or employee of Congress, or an employee of a Member of Congress in connection with any covered Federal action.

"Local government," as used in this clause, means a unit of government in a State and, if chartered, established, or otherwise recognized by a State for the performance of a governmental duty, including a local public authority, a special district, an intrastate district, a council of governments, a sponsor group representative organization, and any other instrumentality of a local government.

"Officer or employee of an agency," as used in this clause, includes the following individuals who are employed by an agency:

(1) An individual who is appointed to a position in the Government under Title 5, United States Code, including a position under a temporary appointment.

(2) A member of the uniformed services, as defined in subsection 101(3),Title 37, United States Code.

(3) A special Government employee, as defined in section 202, Title 18, United States Code.

(4) An individual who is a member of a Federal advisory committee, as defined by the Federal Advisory Committee Act, Title 5, United States Code, appendix 2.

"Person," as used in this clause, means an individual, corporation, company, association, authority, firm, partnership, society, State, and local government, regardless of whether such entity is operated for profit, or not for profit. This term excludes an Indian tribe, tribal organization, or any other Indian organization with respect to expenditures specifically permitted by other Federal law.

"Reasonable compensation," as used in this clause, means, with respect to a regularly employed officer or employee of any person, compensation that is consistent with the normal compensation for such officer or employee for work that is not furnished to, not funded by, or not furnished in cooperation with the Federal Government.

"Reasonable payment," as used in this clause, means, with respect to professional and other technical services, a payment in an amount that is consistent with the amount normally paid for such services in the private sector.

"Recipient," as used in this clause, includes the Contractor and all subcontractors. This term excludes an Indian tribe, tribal organization, or any other Indian organization with respect to expenditures specifically permitted by other Federal law.

"Regularly employed," as used in this clause, means, with respect to an officer or employee of a person requesting or receiving a Federal contract, an officer or employee who is employed by such person for at least 130 working days within 1 year immediately preceding the date of the submission that initiates agency consideration of such person for receipt of such contract. An officer or employee who is employed by such person for less than 130 working days within 1 year immediately preceding the date of the submission that initiates agency consideration of such person shall be considered to be regularly employed as soon as he or she is employed by such person for 130 working days.

State, as used in this clause, means a State of the United States, the District of Columbia, or an outlying area of the United States, an agency or instrumentality of a State, and multi-State, regional, or interstate entity having governmental duties and powers.

(b) Prohibitions.

(1) Section 1352 of Title 31, United States Code, among other things, prohibits a recipient of a Federal contract, grant, loan, or cooperative agreement from using appropriated funds to pay any person for influencing or attempting to influence an officer or employee of any agency, a Member of Congress, an officer or employee of Congress, or an employee of a Member of Congress in connection with any of the following covered Federal actions: the awarding of any Federal contract; the making of any Federal grant; the making of any Federal loan; the entering into of any cooperative agreement; or the modification of any Federal contract, grant, loan, or cooperative agreement.

(2) The Act also requires Contractors to furnish a disclosure if any funds other than Federal appropriated funds (including profit or fee received under a covered Federal transaction) have been paid, or will be paid, to any person for influencing or attempting to influence an officer or employee of any agency, a Member of Congress, an officer or employee of Congress, or an employee of a Member of Congress in connection with a Federal contract, grant, loan, or cooperative agreement.

(3) The prohibitions of the Act do not apply under the following conditions:

(i) Agency and legislative liaison by own employees.

(A) The prohibition on the use of appropriated funds, in subparagraph (b)(1) of this clause, does not apply in the case of a payment of reasonable compensation made to an officer or employee of a person requesting or receiving a covered Federal action if the payment is for agency and legislative liaison activities not directly related to a covered Federal action.

(B) For purposes of subdivision (b)(3)(i)(A) of this clause, providing any information specifically requested by an agency or Congress is permitted at any time.

(C) The following agency and legislative liaison activities are permitted at any time where they are not related to a specific solicitation for any covered Federal action:

(1) Discussing with an agency the qualities and characteristics (including individual demonstrations) of the person's products or services, conditions or terms of sale, and service capabilities.

(2) Technical discussions and other activities regarding the application or adaptation of the person's products or services for an agency's use.

(D) The following agency and legislative liaison activities are permitted where they are prior to formal solicitation of any covered Federal action--

(1) Providing any information not specifically requested but necessary for an agency to make an informed decision about initiation of a covered Federal action;

(2) Technical discussions regarding the preparation of an unsolicited proposal prior to its official submission; and

(3) Capability presentations by persons seeking awards from an agency pursuant to the provisions of the Small Business Act, as amended by Pub. L. 95-507, and subsequent amendments.

(E) Only those services expressly authorized by subdivision (b)(3)(i)(A) of this clause are permitted under this clause.

(ii) Professional and technical services.

(A) The prohibition on the use of appropriated funds, in subparagraph (b)(1) of this clause, does not apply in the case of--

(1) A payment of reasonable compensation made to an officer or employee of a person requesting or receiving a covered Federal action or an extension, continuation, renewal, amendment, or modification of a covered Federal action, if payment is for professional or technical services rendered directly in the preparation, submission, or negotiation of any bid, proposal, or application for that Federal action or for meeting requirements imposed by or pursuant to law as a condition for receiving that Federal action.

(2) Any reasonable payment to a person, other than an officer or employee of a person requesting or receiving a covered Federal action or an extension, continuation, renewal, amendment, or modification of a covered Federal action if the payment is for professional or technical services rendered directly in the preparation, submission, or negotiation of any bid, proposal, or application for that Federal action or for meeting requirements imposed by or pursuant to law as a condition for receiving that Federal action. Persons other than officers or employees of a person requesting or receiving a covered Federal action include consultants and trade associations.

(B) For purposes of subdivision (b)(3)(ii)(A) of this clause, "professional and technical services" shall be limited to advice and analysis directly applying any professional or technical discipline. For example, drafting of a legal document accompanying a bid or proposal by a lawyer is allowable. Similarly, technical advice provided by an engineer on the performance or operational capability of a piece of equipment rendered directly in the negotiation of a contract is allowable. However, communications with the intent to

influence made by a professional (such as a licensed lawyer) or a technical person (such as a licensed accountant) are not allowable under this section unless they provide advice and analysis directly applying their professional or technical expertise and unless the advice or analysis is rendered directly and solely in the preparation, submission or negotiation of a covered Federal action. Thus, for example, communications with the intent to influence made by a lawyer that do not provide legal advice or analysis directly and solely related to the legal aspects of his or her client's proposal, but generally advocate one proposal over another are not allowable under this section because the lawyer is not providing professional legal services. Similarly, communications with the intent to influence made by an engineer providing an engineering analysis prior to the preparation or submission of a bid or proposal are not allowable under this section since the engineer is providing technical services but not directly in the preparation, submission or negotiation of a covered Federal action.

(C) Requirements imposed by or pursuant to law as a condition for receiving a covered Federal award include those required by law or regulation and any other requirements in the actual award documents.

(D) Only those services expressly authorized by subdivisions (b)(3)(ii)(A)(1) and (2) of this clause are permitted under this clause.

(E) The reporting requirements of FAR 3.803(a) shall not apply with respect to payments of reasonable compensation made to regularly employed officers or employees of a person.

(c) Disclosure.

(1) The Contractor who requests or receives from an agency a Federal contract shall file with that agency a disclosure form, OMB standard form LLL, Disclosure of Lobbying Activities, if such person has made or has agreed to make any payment using nonappropriated funds (to include profits from any covered Federal action), which would be prohibited under subparagraph (b)(1) of this clause, if paid for with appropriated funds.

(2) The Contractor shall file a disclosure form at the end of each calendar quarter in which there occurs any event that materially affects the accuracy of the information contained in any disclosure form previously filed by such person under subparagraph (c)(1) of this clause. An event that materially affects the accuracy of the information reported includes--

(i) A cumulative increase of $25,000 or more in the amount paid or expected to be paid for influencing or attempting to influence a covered Federal action; or

(ii) A change in the person(s) or individual(s) influencing or attempting to influence a covered Federal action; or

(iii) A change in the officer(s), employee(s), or Member(s) contacted to influence or attempt to influence a covered Federal action.

(3) The Contractor shall require the submittal of a certification, and if required, a disclosure form by any person who requests or receives any subcontract exceeding $100,000 under the Federal contract.

(4) All subcontractor disclosure forms (but not certifications) shall be forwarded from tier to tier until received by the prime Contractor. The prime Contractor shall submit all disclosures to the Contracting Officer at the end of the calendar quarter in which the disclosure form is submitted by the subcontractor. Each subcontractor certification shall be retained in the subcontract file of the awarding Contractor.

(d) Agreement. The Contractor agrees not to make any payment prohibited by this clause.

(e) Penalties.

(1) Any person who makes an expenditure prohibited under paragraph (a) of this clause or who fails to file or amend the disclosure form to be filed or amended by paragraph (b) of this clause shall be subject to civil penalties as provided for by 31 U.S.C. 1352. An imposition of a civil penalty does not prevent the Government from seeking any other remedy that may be applicable.

(2) Contractors may rely without liability on the representation made by their subcontractors in the certification and disclosure form.

(f) Cost allowability. Nothing in this clause makes allowable or reasonable any costs which would otherwise be unallowable or unreasonable. Conversely, costs made specifically unallowable by the requirements in this clause will not be made allowable under any other provision.

(End of clause)

52.204-4 PRINTED OR COPIED DOUBLE-SIDED ON RECYCLED PAPER (AUG 2000)

(a) Definitions. As used in this clause--

“Postconsumer material” means a material or finished product that has served its intended use and has been discarded for disposal or recovery, having completed its life as a consumer item. Postconsumer material is a part of the broader category of “recovered material.” For paper and paper products, postconsumer material means “postconsumer fiber” defined by the U.S. Environmental Protection Agency (EPA) as--

(1) Paper, paperboard, and fibrous materials from retail stores, office buildings, homes, and so forth, after they have passed through their end-usage as a consumer item, including: used corrugated boxes; old newspapers; old magazines; mixed waste paper; tabulating cards; and used cordage; or

(2) All paper, paperboard, and fibrous materials that enter and are collected from municipal solid waste; but not

(3) Fiber derived from printers' over-runs, converters' scrap, and over-issue publications.

“Printed or copied double-sided” means printing or reproducing a document so that information is on both sides of a sheet of paper.

“Recovered material,” for paper and paper products, is defined by EPA in its Comprehensive Procurement Guideline as “recovered fiber” and means the following materials:

(1) Postconsumer fiber; and

(2) Manufacturing wastes such as--

(i) Dry paper and paperboard waste generated after completion of the papermaking process (that is, those manufacturing operations up to and including the cutting and trimming of the paper machine reel into smaller rolls or rough sheets) including: envelope cuttings, bindery trimmings, and other paper and paperboard waste resulting from printing, cutting, forming, and other converting operations; bag, box, and carton manufacturing wastes; and butt rolls, mill wrappers, and rejected unused stock; and

(ii) Repulped finished paper and paperboard from obsolete inventories of paper and paperboard manufacturers, merchants, wholesalers, dealers, printers, converters, or others.

(b) In accordance with Section 101 of Executive Order 13101 of September 14, 1998, Greening the Government through Waste Prevention, Recycling, and Federal Acquisition, the Contractor is encouraged to submit paper documents, such as offers, letters, or reports, that are printed or copied double-sided on recycled paper that meet minimum content standards specified in Section 505 of Executive Order 13101, when not using electronic commerce methods to submit information or data to the Government.

(c) If the Contractor cannot purchase high-speed copier paper, offset paper, forms bond, computer printout paper, carbonless paper, file folders, white wove envelopes, writing and office paper, book paper, cotton fiber paper, and cover stock meeting the 30 percent postconsumer material standard for use in submitting paper documents to the Government, it should use paper containing no less than 20 percent postconsumer material. This lesser standard should be used only when paper meeting the 30 percent postconsumer material standard is not obtainable at a reasonable price or does not meet reasonable performance standards.

(End of clause)

52.204-6 DATA UNIVERSAL NUMBERING SYSTEM (DUNS) NUMBER (OCT 2003)

(a) The offeror shall enter, in the block with its name and address on the cover page of its offer, the annotation “DUNS” or “DUNS+4” followed by the DUNS number or “DUNS+4” that identifies the offeror's name and address exactly as stated in the offer. The DUNS number is a nine-digit number assigned by Dun and Bradstreet, Inc. The DUNS+4 is the DUNS number plus a 4-character suffix that may be assigned at the discretion of the offeror to establish additional CCR records for identifying alternative Electronic Funds Transfer (EFT) accounts (see Subpart 32.11) for the same parent concern.

(b) If the offeror does not have a DUNS number, it should contact Dun and Bradstreet directly to obtain one.

(1) An offeror may obtain a DUNS number--

(i) If located within the United States, by calling Dun and Bradstreet at 1-866-705-5711 or via the Internet at http://www.dnb.com; or

(ii) If located outside the United States, by contacting the local Dun and Bradstreet office.

(2) The offeror should be prepared to provide the following information:

(i) Company legal business name.

(ii) Tradestyle, doing business, or other name by which your entity is commonly recognized.

(iii) Company physical street address, city, state and Zip Code.

(iv) Company mailing address, city, state and Zip Code (if separate from physical).

(v) Company telephone number.

(vi) Date the company was started.

(vii) Number of employees at your location.

(viii) Chief executive officer/key manager.

(ix) Line of business (industry).

(x) Company Headquarters name and address (reporting relationship within your entity).

(End of provision)

52.214-26 Audit and Records--Sealed Bidding. (OCT 1997)

(a) As used in this clause, records includes books, documents, accounting procedures and practices, and other data, regardless of type and regardless of whether such items are in written form, in the form of computer data, or in any other form.

(b) Cost or pricing data. If the Contractor has been required to submit cost or pricing data in connection with the pricing of any modification to this contract, the Contracting Officer, or an authorized representative of the Contracting Officer, in order to evaluate the accuracy, completeness, and currency of the cost or pricing data, shall have the right to examine and audit all of the Contractor's records, including computations and projections, related to--

(1) The proposal for the modification;

(2) The discussions conducted on the proposal(s), including those related to negotiating;

(3) Pricing of the modification; or

(4) Performance of the modification.

(c) Comptroller General. In the case of pricing any modification, the Comptroller General of the United States, or an authorized representative, shall have the same rights as specified in paragraph (b) of this clause.

(d) Availability. The Contractor shall make available at its office at all reasonable times the materials described in reproduction, until 3 years after final payment under this contract, or for any other period specified in Subpart 4.7 of the Federal Acquisition Regulation (FAR). FAR Subpart 4.7, Contractor Records Retention, in effect on the data of this contract, is incorporated by reference in its entirety and made a part of this contract.

(1) If this contract is completely or partially terminated, the records relating to the work terminated shall be made available for 3 years after any resulting final termination settlement.

(2) Records pertaining to appeals under the Disputes clause or to litigation or the settlement of claims arising under or relating to the performance of this contract shall be made available until disposition of such appeals, litigation, or claims.

(e) The Contractor shall insert a clause containing all the provisions of this clause, including this paragraph (e), in all subcontracts expected to exceed the threshold in FAR 15.403-4(a)(1) for submission of cost or pricing data.

(End of clause)

52.214-27 Price Reduction for Defective Cost or Pricing Data - Modifications - Sealed Bidding. (OCT 1997)

(a) This clause shall become operative only for any modification to this contract involving aggregate increases and/or decreases in costs, plus applicable profits, expected to exceed the threshold for the submission of cost or pricing data at FAR 15.403-4(a)(1), except that this clause does not apply to a modification if an exception under FAR 15.403-1(b) applies.

(1) Based on adequate price competition;

(2) Based on established catalog or market prices of commercial items sold in substantial quantities to the general public; or

(3) Set by law or regulation.

(b) If any price, including profit, negotiated in connection with any modification under this clause, was increased by any significant amount because

(1) the Contractor or a subcontractor furnished cost or pricing data that were not complete, accurate, and current as certified in its Certificate of Current Cost or Pricing Data;

(2) a subcontractor or prospective subcontractor furnished the Contractor cost or pricing data that were not complete, accurate, and current as certified in the Contractor's Certificate of Current Cost or Pricing Data; or

(3) any of these parties furnished data of any description that were not accurate, the price shall be reduced accordingly and the contract shall be modified to reflect the reduction. This right to a price reduction is limited to that resulting from defects in data relating to modifications for which this clause becomes operative under paragraph (a) above.

(c) Any reduction in the contract price under paragraph (b) above due to defective data from a prospective subcontractor that was not subsequently awarded the subcontract shall be limited to the amount, plus applicable overhead and profit markup, by which:

(1) the actual subcontract; or

(2) the actual cost to the Contractor, if there was no subcontract, was less than the prospective subcontract cost estimate submitted by the Contractor; provided, that the actual subcontract price was not itself affected by defective cost or pricing data.

(d) If the Contracting Officer determines under paragraph (b) of this clause that a price or cost reduction should be made:

(1) the Contractor agrees not to raise the following matters as a defense:

(i) The Contractor or subcontractor was a sole source supplier or otherwise was in a superior bargaining position and thus the price of the contract would not have been modified even if accurate, complete, and current cost or pricing data had been submitted;

(ii) The Contracting Officer should have known that the cost or pricing data in issue were defective even though the Contractor or subcontractor took no affirmative action to bring the character of the data to the attention of the Contracting Officer;

(iii) The contract was based on an agreement about the total cost of the contract and there was no agreement about the cost of each item procured under the contract; or

(iv) The Contractor or subcontractor did not submit a Certificate of Current Cost or Pricing Data.

(2) Except as prohibited by subdivision (d)(2)(ii) of this clause:

(i) an offset in an amount determined appropriate by the Contracting Officer based upon the facts shall be allowed against the amount of a contract price reduction if:

(A) The Contractor certifies to the Contracting Officer that, to the best of the Contractor's knowledge and belief, the Contractor is entitled to the offset in the amount requested; and

(B) The Contractor proves that the cost or pricing data were available before the date of agreement on the price of the contract (or price of the modification) and that the data were not submitted before such date.

(ii) An offset shall not be allowed if:

(A) The understated data was known by the Contractor to be understated when the Certificate of Current Cost or Pricing Data was signed; or (B) The Government proves that the facts demonstrate that the contract price would not have increased in the amount to be offset even if the available data had been submitted before the date of agreement on price.

(e) If any reduction in the contract price under this clause reduces the price of items for which payment was made prior to the date of the modification reflecting the price reduction, the Contractor shall be liable to and shall pay the United States at the time such overpayment is repaid:

(1) Simple interest on the amount of such overpayment to be computed from the date(s) of overpayment to the Contractor to the date the Government is repaid by the Contractor at the applicable underpayment rate effective for each quarter prescribed by the Secretary of the Treasury under 26 U.S.C. 6621(a)(2); and

(2) A penalty equal to the amount of the overpayment, if the Contractor or subcontractor knowingly submitted cost or pricing data which were incomplete, inaccurate, or noncurrent.

(End of clause)

52.214-28 Subcontractor Cost or Pricing Data - Modifications - Sealed Bidding. (OCT 1997)

(a) The requirements of paragraphs (b) and (c) of this clause shall:

(1) become operative only for any modification to this contract involving aggregate increases and/or decreases in costs, plus applicable profits, expected to exceed the threshold for submission of cost or pricing data at (FAR) 48 CFR 15.403-4(a)(1); and

(2) be limited to such modifications.

(b) Before awarding any subcontract expected to exceed the threshold for submission of cost or pricing data at FAR 15.403-4(a)(1), on the date of agreement on price or the date of award, whichever is later; or before pricing any subcontract modifications involving aggregate increases and/or decreases in costs, plus applicable profits, expected to exceed the threshold for submission of cost or pricing data at FAR 15.403-4(a)(1), the Contractor shall require the subcontractor to submit cost or pricing data (actually or by specific identification in writing), unless an exception under FAR 15.403-1(b) applies.

(1) Based on adequate price competition;

(2) Based on established catalog or market prices of commercial items sold in substantial quantities to the general public; or

(3) Set by law or regulation.

(c) The Contractor shall require the subcontractor to certify in substantially the form prescribed in subsection 15.406-2 of the Federal Acquisition Regulation that, to the best of its knowledge and belief, the data submitted under paragraph (b) above were accurate, complete, and current as of the date of agreement on the negotiated price of the subcontract or subcontract modification.

(d) The Contractor shall insert the substance of this clause, including this paragraph (d), in each subcontract that, when entered into, exceeds the threshold for submission of cost or pricing data at FAR 15.403-4(a)(1).

(End of clause)

52.219-8 UTILIZATION OF SMALL BUSINESS CONCERNS (MAY 2004)

(a) It is the policy of the United States that small business concerns, veteran-owned small business concerns, service-disabled veteran-owned small business concerns, HUBZone small business concerns, small disadvantaged business concerns, and women-owned small business concerns shall have the maximum practicable opportunity to participate in performing contracts let by any Federal agency, including contracts and subcontracts for subsystems, assemblies, components, and related services for major systems. It is further the policy of the United States that its prime contractors establish procedures to ensure the timely payment of amounts due pursuant to the terms of their subcontracts with small business concerns, veteran-owned small business concerns, service-disabled veteran-owned small business concerns, HUBZone small business concerns, small disadvantaged business concerns, and women-owned small business concerns.

(b) The Contractor hereby agrees to carry out this policy in the awarding of subcontracts to the fullest extent consistent with efficient contract performance. The Contractor further agrees to cooperate in any studies or surveys as may be conducted by the United States Small Business Administration or the awarding agency of the United States as may be necessary to determine the extent of the Contractor's compliance with this clause.

Definitions. As used in this contract--

HUBZone small business concern means a small business concern that appears on the List of Qualified HUBZone Small Business Concerns maintained by the Small Business Administration.

Service-disabled veteran-owned small business concern--

(1) Means a small business concern--

(i) Not less than 51 percent of which is owned by one or more service-disabled veterans or, in the case of any publicly owned business, not less than 51 percent of the stock of which is owned by one or more service-disabled veterans; and

(ii) The management and daily business operations of which are controlled by one or more service-disabled veterans or, in the case of a service-disabled veteran with permanent and severe disability, the spouse or permanent caregiver of such veteran.

(2) Service-disabled veteran means a veteran, as defined in 38 U.S.C. 101(2), with a disability that is service-connected, as defined in 38 U.S.C. 101(16).

Small business concern means a small business as defined pursuant to Section 3 of the Small Business Act and relevant regulations promulgated pursuant thereto.

Small disadvantaged business concern means a small business concern that represents, as part of its offer that--

(1) It has received certification as a small disadvantaged business concern consistent with 13 CFR part 124, subpart B;

(2) No material change in disadvantaged ownership and control has occurred since its certification;

(3) Where the concern is owned by one or more individuals, the net worth of each individual upon whom the certification is based does not exceed $750,000 after taking into account the applicable exclusions set forth at 13 CFR 124.104(c)(2); and

(4) It is identified, on the date of its representation, as a certified small disadvantaged business in the database maintained by the Small Business Administration (PRO-Net).

Veteran-owned small business concern means a small business concern--

(1) Not less than 51 percent of which is owned by one or more veterans (as defined at 38 U.S.C. 101(2)) or, in the case of any publicly owned business, not less than 51 percent of the stock of which is owned by one or more veterans; and

(2) The management and daily business operations of which are controlled by one or more veterans.

Women-owned small business concern means a small business concern--

(1) That is at least 51 percent owned by one or more women, or, in the case of any publicly owned business, at least 51 percent of the stock of which is owned by one or more women; and

(2) Whose management and daily business operations are controlled by one or more women.

(d) Contractors acting in good faith may rely on written representations by their subcontractors regarding their status as a small business concern, a veteran-owned small business concern, a service-disabled veteran-owned small business concern, a HUBZone small business concern, a small disadvantaged business concern, or a women-owned small business concern.

(End of clause)

52.219-9 SMALL BUSINESS SUBCONTRACTING PLAN (JAN 2002)

(a) This clause does not apply to small business concerns.

(b) Definitions. As used in this clause--

“Commercial item” means a product or service that satisfies the definition of commercial item in section 2.101 of the Federal Acquisition Regulation.

“Commercial plan” means a subcontracting plan (including goals) that covers the offeror’s fiscal year and that applies to the entire production of commercial items sold by either the entire company or a portion thereof (e.g., division, plant, or product line).

“Individual contract plan” means a subcontracting plan that covers the entire contract period (including option periods), applies to a specific contract, and has goals that are based on the offeror’s planned subcontracting in support of the specific contract except that indirect costs incurred for common or joint purposes may be allocated on a prorated basis to the contract.

“Master plan” means a subcontracting plan that contains all the required elements of an individual contract plan, except goals, and may be incorporated into individual contract plans, provided the master plan has been approved.

“Subcontract” means any agreement (other than one involving an employer-employee relationship) entered into by a Federal Government prime Contractor or subcontractor calling for supplies or services required for performance of the contract or subcontract.

(c) The offeror, upon request by the Contracting Officer, shall submit and negotiate a subcontracting plan, where applicable, that separately addresses subcontracting with small business concerns, veteran-owned small business, service-disabled veteran-owned small business, HUBZone small business concerns, small disadvantaged business, and with women-owned small business concerns. If the offeror is submitting an individual contract plan, the plan must separately address subcontracting with small business, veteran-

owned small business, service-disabled veteran-owned small business, HUBZone small business, small disadvantaged business, and women-owned small business concerns with a separate part for the basic contract and separate parts for each option (if any). The plan shall be included in and made a part of the resultant contract. The subcontracting plan shall be negotiated within the time specified by the Contracting Officer. Failure to submit and negotiate the subcontracting plan shall make the offeror ineligible for award of a contract.

(d) The offeror's subcontracting plan shall include the following:

(1) Goals, expressed in terms of percentages of total planned subcontracting dollars, for the use of small business, veteran-owned small business, service-disabled veteran-owned small business, HUBZone small business, small disadvantaged business, and women-owned small business concerns as subcontractors. The offeror shall include all subcontracts that contribute to contract performance, and may include a proportionate share of products and services that are normally allocated as indirect costs.

(2) A statement of --

(i) Total dollars planned to be subcontracted for an individual contract plan; or the offeror's total projected sales, expressed in dollars, and the total value of projected subcontracts to support the sales for a commercial plan;

(ii) Total dollars planned to be subcontracted to small business concerns;

(iii) Total dollars planned to be subcontracted to veteran-owned small business concerns;

(iv) Total dollars planned to be subcontracted to service-disabled veteran-owned small business;

(v) Total dollars planned to be subcontracted to HUBZone small business concerns;

(vi) Total dollars planned to be subcontracted to small disadvantaged business concerns; and

(vii) Total dollars planned to be subcontracted to women-owned small business concerns.

(3) A description of the principal types of supplies and services to be subcontracted, and an identification of the types planned for subcontracting to --

(i) Small business concerns,

(ii) Veteran-owned small business concerns;

(iii) Service-disabled veteran-owned small business concerns;

(iv) HUBZone small business concerns;

(v) Small disadvantaged business concerns, and

(vi) Women-owned small business concerns.

(4) A description of the method used to develop the subcontracting goals in paragraph (d)(1) of this clause.

(5) A description of the method used to identify potential sources for solicitation purposes (e.g., existing company source lists, the Procurement Marketing and Access Network (PRO-Net) of the Small Business Administration (SBA), veterans service organizations, the National Minority Purchasing Council Vendor Information Service, the Research and Information Division of the Minority Business Development Agency in the Department of Commerce, or small, HUBZone, small disadvantaged, and women-owned small business trade associations). A firm may rely on the information contained in PRO-Net as an accurate

representation of a concern's size and ownership characteristics for the purposes of maintaining a small, veteran-owned small, service-disabled veteran-owned small, HUBZone small, small disadvantaged, and women-owned small business source list. Use of PRO-Net as its source list does not relieve a firm of its responsibilities (e.g., outreach, assistance, counseling, or publicizing subcontracting opportunities) in this clause.

(6) A statement as to whether or not the offeror included indirect costs in establishing subcontracting goals, and a description of the method used to determine the proportionate share of indirect costs to be incurred with --

(i) Small business concerns;

(ii) Veteran-owned small business concerns;

(iii) Service-disabled veteran-owned small business concerns;

(iv) HUBZone small business concerns;

(v) Small disadvantaged business concerns; and

(vi) Women-owned small business concerns.

(7) The name of the individual employed by the offeror who will administer the offeror's subcontracting program, and a description of the duties of the individual.

(8) A description of the efforts the offeror will make to assure that small business, veteran-owned small business, service-disabled veteran-owned small business, HUBZone small business, small disadvantaged business, and women-owned small business concerns have an equitable opportunity to compete for subcontracts.

(9) Assurances that the offeror will include the clause of this contract entitled "Utilization of Small Business Concerns" in all subcontracts that offer further subcontracting opportunities, and that the offeror will require all subcontractors (except small business concerns) that receive subcontracts in excess of $500,000 ($1,000,000 for construction of any public facility) to adopt a plan similar to the plan that complies with the requirements of this clause.

(10) Assurances that the offeror will --

(i) Cooperate in any studies or surveys as may be required;

(ii) Submit periodic reports so that the Government can determine the extent of compliance by the offeror with the subcontracting plan;

(iii) Submit Standard Form (SF) 294, Subcontracting Report for Individual Contracts, and/or SF 295, Summary Subcontract Report, in accordance with the paragraph (j) of this clause. The reports shall provide information on subcontract awards to small business concerns, veteran-owned small business concerns, service-disabled veteran-owned small business concerns, HUBZone small business concerns, small disadvantaged business concerns, women-owned small business concerns, and Historically Black Colleges and Universities and Minority Institutions. Reporting shall be in accordance with the instructions on the forms or as provided in agency regulations.

(iv) Ensure that its subcontractors agree to submit SF 294 and 295.

(11) A description of the types of records that will be maintained concerning procedures that have been adopted to comply with the requirements and goals in the plan, including establishing source lists; and a description of the offeror's efforts to locate small business, veteran-owned small business, service-disabled

veteran-owned small business, HUBZone small business, small disadvantaged business, and women-owned small business concerns and award subcontracts to them. The records shall include at least the following (on a plant-wide or company-wide basis, unless otherwise indicated):

(i) Source lists (e.g., PRO-Net), guides, and other data that identify small business, veteran-owned small business, service-disabled veteran-owned small business, HUBZone small business, small disadvantaged business, and women-owned small business concerns.

(ii) Organizations contacted in an attempt to locate sources that are small business, veteran-owned small business, service-disabled veteran-owned small business, HUBZone small business, small disadvantaged business, or women-owned small business concerns.

(iii) Records on each subcontract solicitation resulting in an award of more than $100,000, indicating --

(A) Whether small business concerns were solicited and if not, why not;

(B) Whether veteran-owned small business concerns were solicited and, if not, why not;

(C) Whether service-disabled veteran-owned small business concerns were solicited and, if not, why not;

(D) Whether HUBZone small business concerns were solicited and, if not, why not;

(E) Whether small disadvantaged business concerns were solicited and if not, why not;

(F) Whether women-owned small business concerns were solicited and if not, why not; and

(G) If applicable, the reason award was not made to a small business concern.

(iv) Records of any outreach efforts to contact --

(A) Trade associations;

(B) Business development organizations;

(C) Conferences and trade fairs to locate small, HUBZone small, small disadvantaged, and women-owned small business sources; and

(D) Veterans service organizaions.

(v) Records of internal guidance and encouragement provided to buyers through --

(A) Workshops, seminars, training, etc., and

(B) Monitoring performance to evaluate compliance with the program’s requirements.

(vi) On a contract-by-contract basis, records to support award data submitted by the offeror to the Government, including the name, address, and business size of each subcontractor. Contractors having commercial plans need not comply with this requirement.

(e) In order to effectively implement this plan to the extent consistent with efficient contract performance, the Contractor shall perform the following functions:

(1) Assist small business, veteran-owned small business, service-disabled veteran-owned small business, HUBZone small business, small disadvantaged business, and women-owned small business concerns by arranging solicitations, time for the preparation of bids, quantities, specifications, and delivery schedules so as to facilitate the participation by such concerns. Where the Contractor’s lists of potential small business,

veteran-owned small business, service-disabled veteran-owned small business, HUBZone small business, small disadvantaged business, and women-owned small business subcontractors are excessively long, reasonable effort shall be made to give all such small business concerns an opportunity to compete over a period of time.

(2) Provide adequate and timely consideration of the potentialities of small business, veteran-owned small business, service-disabled veteran-owned small business, HUBZone small business, small disadvantaged business, and women-owned small business concerns in all “make-or-buy” decisions.

(3) Counsel and discuss subcontracting opportunities with representatives of small business, veteran-owned small business, service-disabled veteran-owned small business, HUBZone small business, small disadvantaged business, and women-owned small business firms.

(4) Provide notice to subcontractors concerning penalties and remedies for misrepresentations of business status as small, veteran-owned small business, HUBZone small, small disadvantaged or women-owned small business for the purpose of obtaining a subcontract that is to be included as part or all of a goal contained in the Contractor’s subcontracting plan.

(f) A master plan on a plant or division-wide basis that contains all the elements required by paragraph (d) of this clause, except goals, may be incorporated by reference as a part of the subcontracting plan required of the offeror by this clause; provided --

(1) The master plan has been approved;

(2) The offeror ensures that the master plan is updated as necessary and provides copies of the approved master plan, including evidence of its approval, to the Contracting Officer; and

(3) Goals and any deviations from the master plan deemed necessary by the Contracting Officer to satisfy the requirements of this contract are set forth in the individual subcontracting plan.

(g) A commercial plan is the preferred type of subcontracting plan for contractors furnishing commercial items. The commercial plan shall relate to the offeror’s planned subcontracting generally, for both commercial and Government business, rather than solely to the Government contract. Commercial plans are also preferred for subcontractors that provide commercial items under a prime contract, whether or not the prime contractor is supplying a commercial item.

(h) Prior compliance of the offeror with other such subcontracting plans under previous contracts will be considered by the Contracting Officer in determining the responsibility of the offeror for award of the contract.

(i) The failure of the Contractor or subcontractor to comply in good faith with --

(1) The clause of this contract entitled “Utilization Of Small Business Concerns;” or

(2) An approved plan required by this clause, shall be a material breach of the contract.

(j) The Contractor shall submit the following reports:

(1) Standard Form 294, Subcontracting Report for Individual Contracts. This report shall be submitted to the Contracting Officer semiannually and at contract completion. The report covers subcontract award data related to this contract. This report is not required for commercial plans.

(2) Standard Form 295, Summary Subcontract Report. This report encompasses all the contracts with the awarding agency. It must be submitted semi-annually for contracts with the Department of Defense and annually for contracts with civilian agencies. If the reporting activity is covered by a commercial plan, the reporting activity must report annually all subcontract awards under that plan. All reports submitted at the

close of each fiscal year (both individual and commercial plans) shall include a breakout, in the Contractor's format, of subcontract awards, in whole dollars, to small disadvantaged business concerns by North American Industry Classification System (NAICS) Industry Subsector. For a commercial plan, the Contractor may obtain from each of its subcontractors a predominant NAICS Industry Subsector and report all awards to that subcontractor under its predominant NAICS Industry Subsector.

(End of clause)

52.219-14 LIMITATIONS ON SUBCONTRACTING (DEC 1996)

(a) This clause does not apply to the unrestricted portion of a partial set-aside.

(b) By submission of an offer and execution of a contract, the Offeror/Contractor agrees that in performance of the contract in the case of a contract for--

(1) Services (except construction). At least 50 percent of the cost of contract performance incurred for personnel shall be expended for employees of the concern.

(2) Supplies (other than procurement from a nonmanufacturer of such supplies). The concern shall perform work for at least 50 percent of the cost of manufacturing the supplies, not including the cost of materials.

(3) General construction. The concern will perform at least 15 percent of the cost of the contract, not including the cost of materials, with its own employees.

(4) Construction by special trade contractors. The concern will perform at least 25 percent of the cost of the contract, not including the cost of materials, with its own employees.

52.219-16 Liquidated Damages-Subcontracting Plan (JAN 1999)

(a) Failure to make a good faith effort to comply with the subcontracting plan, as used in this clause, means a willful or intentional failure to perform in accordance with the requirements of the subcontracting plan approved under the clause in this contract entitled "Small Business Subcontracting Plan," or willful or intentional action to frustrate the plan.

(b) Performance shall be measured by applying the percentage goals to the total actual subcontracting dollars or, if a commercial plan is involved, to the pro rata share of actual subcontracting dollars attributable to Government contracts covered by the commercial plan. If, at contract completion or, in the case of a commercial plan, at the close of the fiscal year for which the plan is applicable, the Contractor has failed to meet its subcontracting goals and the Contracting Officer decides in accordance with paragraph (c) of this clause that the Contractor failed to make a good faith effort to comply with its subcontracting plan, established in accordance with the clause in this contract entitled "Small Business Subcontracting Plan," the Contractor shall pay the Government liquidated damages in an amount stated. The amount of probable damages attributable to the Contractor's failure to comply shall be an amount equal to the actual dollar amount by which the Contractor failed to achieve each subcontract goal.

(c) Before the Contracting Officer makes a final decision that the Contractor has failed to make such good faith effort, the Contracting Officer shall give the Contractor written notice specifying the failure and permitting the Contractor to demonstrate what good faith efforts have been made and to discuss the matter. Failure to respond to the notice may be taken as an admission that no valid explanation exists. If, after consideration of all the pertinent data, the Contracting Officer finds that the Contractor failed to make a good faith effort to comply with the subcontracting plan, the Contracting Officer shall issue a final decision to that effect and require that the Contractor pay the Government liquidated damages as provided in paragraph (b) of this clause.

(d) With respect to commercial plans, the Contracting Officer who approved the plan will perform the functions of the Contracting Officer under this clause on behalf of all agencies with contracts covered by

the commercial plan.

(e) The Contractor shall have the right of appeal, under the clause in this contract entitled Disputes, from any final decision of the Contracting Officer.

(f) Liquidated damages shall be in addition to any other remedies that the Government may have.

(End of clause)

52.222-3 Convict Labor (JUN 2003)

(a) Except as provided in paragraph (b) of this clause, the Contractor shall not employ in the performance of this contract any person undergoing a sentence of imprisonment imposed by any court of a State, the District of Columbia, Puerto Rico, the Northern Mariana Islands, American Samoa, Guam, or the U.S. Virgin Islands.

(b) The Contractor is not prohibited from employing persons--

(1) On parole or probation to work at paid employment during the term of their sentence;

(2) Who have been pardoned or who have served their terms; or

(3) Confined for violation of the laws of any of the States, the District of Columbia, Puerto Rico, the Northern Mariana Islands, American Samoa, Guam, or the U.S. Virgin Islands who are authorized to work at paid employment in the community under the laws of such jurisdiction, if--

(i) The worker is paid or is in an approved work training program on a voluntary basis;

(ii) Representatives of local union central bodies or similar labor union organizations have been consulted;

(iii) Such paid employment will not result in the displacement of employed workers, or be applied in skills, crafts, or trades in which there is a surplus of available gainful labor in the locality, or impair existing contracts for services;

(iv) The rates of pay and other conditions of employment will not be less than those paid or provided for work of a similar nature in the locality in which the work is being performed; and

(v) The Attorney General of the United States has certified that the work-release laws or **regulations** of the jurisdiction involved are in conformity with the requirements of Executive Order 11755, as amended by Executive Orders 12608 and 12943.

(End of clause)

52.222-4 Contract Work Hours and Safety Standards Act - Overtime Compensation. (SEP 2000)

(a) Overtime requirements. No Contractor or subcontractor employing laborers or mechanics (see Federal Acquisition Regulation 22.300) shall require or permit them to work over 40 hours in any workweek unless they are paid at least 1 and 1/2 times the basic rate of pay for each hour worked over 40 hours.

(b) Violation; liability for unpaid wages; liquidated damages. The responsible Contractor and subcontractor are liable for unpaid wages if they violate the terms in paragraph (a) of this clause. In addition, the Contractor and subcontractor are liable for liquidated damages payable to the Government. The Contracting Officer will assess liquidated damages at the rate of $10 per affected employee for each calendar day on which the employer required or permitted the employee to work in excess of the standard workweek of 40 hours without paying overtime wages required by the Contract Work Hours and Safety Standards Act.

(c) Withholding for unpaid wages and liquidated damages. The Contracting Officer will withhold from payments due under the contract sufficient funds required to satisfy any Contractor or subcontractor liabilities for unpaid wages and liquidated damages. If amounts withheld under the contract are insufficient to satisfy Contractor or subcontractor liabilities, the Contracting Officer will withhold payments from other Federal or Federally assisted contracts held by the same Contractor that are subject to the Contract Work Hours and Safety Standards Act.

(d) Payrolls and basic records.

(1) The Contractor and its subcontractors shall maintain payrolls and basic payroll records for all laborers and mechanics working on the contract during the contract and shall make them available to the Government until 3 years after contract completion. The records shall contain the name and address of each employee, social security number, labor classifications, hourly rates of wages paid, daily and weekly number of hours worked, deductions made, and actual wages paid. The records need not duplicate those required for construction work by Department of Labor regulations at 29 CFR 5.5(a)(3) implementing the Davis-Bacon Act.

(2) The Contractor and its subcontractors shall allow authorized representatives of the Contracting Officer or the Department of Labor to inspect, copy, or transcribe records maintained under paragraph (d)(1) of this clause. The Contractor or subcontractor also shall allow authorized representatives of the Contracting Officer or Department of Labor to interview employees in the workplace during working hours.

(e) Subcontracts. The Contractor shall insert the provisions set forth in paragraphs (a) through (d) of this clause in subcontracts exceeding $100,000 and require subcontractors to include these provisions in any lower tier subcontracts. The Contractor shall be responsible for compliance by any subcontractor or lower-tier subcontractor with the provisions set forth in paragraphs (a) through (d) of this clause.

(End of clause)

52.222-6 DAVIS-BACON ACT (FEB 1995)

(a) All laborers and mechanics employed or working upon the site of the work will be paid unconditionally and not less often than once a week, and without subsequent deduction or rebate on any account (except such payroll deductions as are permitted by regulations issued by the Secretary of Labor under the Copeland Act (29 CFR Part 3), the full amount of wages and bona fide fringe benefits (or cash equivalents thereof) due at time of payment computed at rates not less than those contained in the wage determination of the Secretary of Labor which is attached hereto and made a part hereof, regardless of any contractual relationship which may be alleged to exist between the Contractor and such laborers and mechanics. Contributions made or costs reasonably anticipated for bona fide fringe benefits under section 1(b)(2) of the Davis-Bacon Act on behalf of laborers or mechanics are considered wages paid to such laborers or mechanics, subject to the provisions of paragraph (d) of this clause; also, regular contributions made or costs incurred for more than a weekly period (but not less often than quarterly) under plans, funds, or programs which cover the particular weekly period, are deemed to be constructively made or incurred during such period. Such laborers and mechanics shall be paid not less than the appropriate wage rate and fringe benefits in the wage determination for the classification of work actually performed, without regard to skill, except as provided in the clause entitled Apprentices and Trainees. Laborers or mechanics performing work in more than one classification may be compensated at the rate specified for each classification for the time actually worked therein; provided, That the employer's payroll records accurately set forth the time spent in each classification in which work is performed. The wage determination (including any additional classifications and wage rates conformed under paragraph (b) of this clause) and the Davis-Bacon poster (WH-1321) shall be posted at all times by the Contractor and its subcontractors at the site of the work in a prominent and accessible place where it can be easily seen by the workers.

(b)(1) The Contracting Officer shall require that any class of laborers or mechanics which is not listed in the wage determination and which is to be employed under the contract shall be classified in conformance with the wage determination. The Contracting Officer shall approve an additional classification and wage

rate and fringe benefits therefor only when all the following criteria have been met:

(i) The work to be performed by the classification requested is not performed by a classification in the wage determination.

(ii) The classification is utilized in the area by the construction industry.

(iii) The proposed wage rate, including any bona fide fringe benefits, bears a reasonable relationship to the wage rates contained in the wage determination.

(2) If the Contractor and the laborers and mechanics to be employed in the classification (if known), or their representatives, and the Contracting Officer agree on the classification and wage rate (including the amount designated for fringe benefits, where appropriate), a report of the action taken shall be sent by the Contracting Officer to the Administrator of the Wage and Hour Division, Employment Standards Administration, U.S. Department of Labor, Washington, DC 20210. The Administrator or an authorized representative will approve, modify, or disapprove every additional classification action within 30 days of receipt and so advise the Contracting Officer or will notify the Contracting Officer within the 30-day period that additional time is necessary.

(3) In the event the Contractor, the laborers or mechanics to be employed in the classification, or their representatives, and the Contracting Officer do not agree on the proposed classification and wage rate (including the amount designated for fringe benefits, where appropriate), the Contracting Officer shall refer the questions, including the views of all interested parties and the recommendation of the Contracting Officer, to the Administrator of the Wage and Hour Division for determination. The Administrator, or an authorized representative, will issue a determination within 30 days of receipt and so advise the Contracting Officer or will notify the Contracting Officer within the 30-day period that additional time is necessary.

(4) The wage rate (including fringe benefits, where appropriate) determined pursuant to subparagraphs (b)(2) and (b)(3) of this clause shall be paid to all workers performing work in the classification under this contract from the first day on which work is performed in the classification.

(c) Whenever the minimum wage rate prescribed in the contract for a class of laborers or mechanics includes a fringe benefit which is not expressed as an hourly rate, the Contractor shall either pay the benefit as stated in the wage determination or shall pay another bona fide fringe benefit or an hourly cash equivalent thereof.

(c) If the Contractor does not make payments to a trustee or other third person, the Contractor may consider as part of the wages of any laborer or mechanic the amount of any costs reasonably anticipated in providing bona fide fringe benefits under a plan or program; provided, That the Secretary of Labor has found, upon the written request of the Contractor, that the applicable standards of the Davis-Bacon Act have been met. The Secretary of Labor may require the Contractor to set aside in a separate account assets for the meeting of obligations under the plan or program.

(End of clause)

52.222-7 WITHHOLDING OF FUNDS (FEB 1988)

The Contracting Officer shall, upon his or her own action or upon written request of an authorized representative of the Department of Labor, withhold or cause to be withheld from the Contractor under this contract or any other Federal contract with the same Prime Contractor, or any other Federally assisted contract subject to Davis-Bacon prevailing wage requirements, which is held by the same Prime Contractor, so much of the accrued payments or advances as may be considered necessary to pay laborers and mechanics, including apprentices, trainees, and helpers, employed by the Contractor or any subcontractor the full amount of wages required by the contract. In the event of failure to pay any laborer or mechanic, including any apprentice, trainee, or helper, employed or working on the site of the work, all or part of the wages required by the contract, the Contracting Officer may, after written notice to the

Contractor, take such action as may be necessary to cause the suspension of any further payment, advance, or guarantee of funds until such violations have ceased.

(End of clause)

52.222-8 PAYROLLS AND BASIC RECORDS (FEB 1988)

(a) Payrolls and basic records relating thereto shall be maintained by the Contractor during the course of the work and preserved for a period of 3 years thereafter for all laborers and mechanics working at the site of the work. Such records shall contain the name, address, and social security number of each such worker, his or her correct classification, hourly rates of wages paid (including rates of contributions or costs anticipated for bona fide fringe benefits or cash equivalents thereof of the types described in section 1(b)(2)(B) of the Davis-Bacon Act), daily and weekly number of hours worked, deductions made, and actual wages paid. Whenever the Secretary of Labor has found, under paragraph (d) of the clause entitled Davis-Bacon Act, that the wages of any laborer or mechanic include the amount of any costs reasonably anticipated in providing benefits under a plan or program described in section 1(b)(2)(B) of the Davis-Bacon Act, the Contractor shall maintain records which show that the commitment to provide such benefits is enforceable, that the plan or program is financially responsible, and that the plan or program has been communicated in writing to the laborers or mechanics affected, and records which show the costs anticipated or the actual cost incurred in providing such benefits. Contractors employing apprentices or trainees under approved programs shall maintain written evidence of the registration of apprenticeship programs and certification of trainee programs, the registration of the apprentices and trainees, and the ratios and wage rates prescribed in the applicable programs.

(b)(1) The Contractor shall submit weekly for each week in which any contract work is performed a copy of all payrolls to the Contracting Officer. The payrolls submitted shall set out accurately and completely all of the information required to be maintained under paragraph (a) of this clause. This information may be submitted in any form desired. Optional Form WH-347 (Federal Stock Number 029-005-00014-1) is available for this purpose and may be purchased from the Superintendent of Documents, U.S. Government Printing Office, Washington, DC 20402. The Prime Contractor is responsible for the submission of copies of payrolls by all subcontractors.

(2) Each payroll submitted shall be accompanied by a "Statement of Compliance," signed by the Contractor or subcontractor or his or her agent who pays or supervises the payment of the persons employed under the contract and shall certify--

(i) That the payroll for the payroll period contains the information required to be maintained under paragraph (a) of this clause and that such information is correct and complete;

(ii) That each laborer or mechanic (including each helper, apprentice, and trainee) employed on the contract during the payroll period has been paid the full weekly wages earned, without rebate, either directly or indirectly, and that no deductions have been made either directly or indirectly from the full wages earned, other than permissible deductions as set forth in the Regulations, 29 CFR Part 3; and

(iii) That each laborer or mechanic has been paid not less than the applicable wage rates and fringe benefits or cash equivalents for the classification of work performed, as specified in the applicable wage determination incorporated into the contract.

(3) The weekly submission of a properly executed certification set forth on the reverse side of Optional Form WH-347 shall satisfy the requirement for submission of the "Statement of Compliance" required by subparagraph (b)(2) of this clause.

(4) The falsification of any of the certifications in this clause may subject the Contractor or subcontractor to civil or criminal prosecution under Section 1001 of Title 18 and Section 3729 of Title 31 of the United States Code.

(c) The Contractor or subcontractor shall make the records required under paragraph (a) of this clause available for inspection, copying, or transcription by the Contracting Officer or authorized representatives of the Contracting Officer or the Department of Labor. The Contractor or subcontractor shall permit the Contracting Officer or representatives of the Contracting Officer or the Department of Labor to interview employees during working hours on the job. If the Contractor or subcontractor fails to submit required records or to make them available, the Contracting Officer may, after written notice to the Contractor, take such action as may be necessary to cause the suspension of any further payment. Furthermore, failure to submit the required records upon request or to make such records available may be grounds for debarment action pursuant to 29 CFR 5.12.

(End of clause)

52.222-9 APPRENTICES AND TRAINEES (FEB 1988)

(a) Apprentices. Apprentices will be permitted to work at less than the predetermined rate for the work they performed when they are employed pursuant to and individually registered in a bona fide apprenticeship program registered with the U.S. Department of Labor, Employment and Training Administration, Bureau of Apprenticeship and Training, or with a State Apprenticeship Agency recognized by the Bureau, or if a person is employed in his or her first 90 days of probationary employment as an apprentice in such an apprenticeship program, who is not individually registered in the program, but who has been certified by the Bureau of Apprenticeship and Training or a State Apprenticeship Agency (where appropriate) to be eligible for probationary employment as an apprentice. The allowable ratio of apprentices to journeymen on the job site in any craft classification shall not be greater than the ratio permitted to the Contractor as to the entire work force under the registered program. Any worker listed on a payroll at an apprentice wage rate, who is not registered or otherwise employed as stated in this paragraph, shall be paid not less than the applicable wage determination for the classification of work actually performed. In addition, any apprentice performing work on the job site in excess of the ratio permitted under the registered program shall be paid not less than the applicable wage rate on the wage determination for the work actually performed. Where a contractor is performing construction on a project in a locality other than that in which its program is registered, the ratios and wage rates (expressed in percentages of the journeyman's hourly rate) specified in the Contractor's or subcontractor's registered program shall be observed. Every apprentice must be paid at not less than the rate specified in the registered program for the apprentice's level of progress, expressed as a percentage of the journeyman hourly rate specified in the applicable wage determination. Apprentices shall be paid fringe benefits in accordance with the provisions of the apprenticeship program. If the apprenticeship program does not specify fringe benefits, apprentices must be paid the full amount of fringe benefits listed on the wage determination for the applicable classification. If the Administrator determines that a different practice prevails for the applicable apprentice classification, fringes shall be paid in accordance with that determination. In the event the Bureau of Apprenticeship and Training, or a State Apprenticeship Agency recognized by the Bureau, withdraws approval of an apprenticeship program, the Contractor will no longer be permitted to utilize apprentices at less than the applicable predetermined rate for the work performed until an acceptable program is approved.

(b) Trainees. Except as provided in 29 CFR 5.16, trainees will not be permitted to work at less than the predetermined rate for the work performed unless they are employed pursuant to and individually registered in a program which has received prior approval, evidenced by formal certification by the U.S. Department of Labor, Employment and Training Administration. The ratio of trainees to journeymen on the job site shall not be greater than permitted under the plan approved by the Employment and Training Administration. Every trainee must be paid at not less than the rate specified in the approved program for the trainee's level of progress, expressed as a percentage of the journeyman hourly rate specified in the applicable wage determination. Trainees shall be paid fringe benefits in accordance with the provisions of the trainee program. If the trainee program does not mention fringe benefits, trainees shall be paid the full amount of fringe benefits listed in the wage determination unless the Administrator of the Wage and Hour Division determines that there is an apprenticeship program associated with the corresponding journeyman wage rate in the wage determination which provides for less than full fringe benefits for apprentices. Any employee listed on the payroll at a trainee rate who is not registered and participating in a training plan

approved by the Employment and Training Administration shall be paid not less than the applicable wage rate in the wage determination for the classification of work actually performed. In addition, any trainee performing work on the job site in excess of the ratio permitted under the registered program shall be paid not less than the applicable wage rate in the wage determination for the work actually performed. In the event the Employment and Training Administration withdraws approval of a training program, the Contractor will no longer be permitted to utilize trainees at less than the applicable predetermined rate for the work performed until an acceptable program is approved.

(c) Equal employment opportunity. The utilization of apprentices, trainees, and journeymen under this clause shall be in conformity with the equal employment opportunity requirements of Executive Order 11246, as amended, and 29 CFR Part 30.

(End of clause)

52.222-10 COMPLIANCE WITH COPELAND ACT REQUIREMENTS (FEB 1988)

The Contractor shall comply with the requirements of 29 CFR Part 3, which are hereby incorporated by reference in this contract.

(End of clause)

52.222-11 SUBCONTRACTS (LABOR STANDARDS (FEB 1988)

(a) The Contractor or subcontractor shall insert in any subcontracts the clauses entitled Davis-Bacon Act, Contract Work Hours and Safety Standards Act-Overtime Compensation, Apprentices and Trainees, Payrolls and Basic Records, Compliance with Copeland Act Requirements, Withholding of Funds, Subcontracts (Labor Standards), Contract Termination-Debarment, Disputes Concerning Labor Standards, Compliance with Davis-Bacon and Related Act Regulations, and Certification of Eligibility, and such other clauses as the Contracting Officer may, by appropriate instructions, require, and also a clause requiring subcontractors to include these clauses in any lower tier subcontracts. The Prime Contractor shall be responsible for compliance by any subcontractor or lower tier subcontractor with all the contract clauses cited in this paragraph.

(b)(1) Within 14 days after award of the contract, the Contractor shall deliver to the Contracting Officer a completed Statement and Acknowledgment Form (SF 1413) for each subcontract, including the subcontractor's signed and dated acknowledgment that the clauses set forth in paragraph (a) of this clause have been included in the subcontract.

(2) Within 14 days after the award of any subsequently awarded subcontract the Contractor shall deliver to the Contracting Officer an updated completed SF 1413 for such additional subcontract.

(End of clause)

52.222-12 CONTRACT TERMINATION--DEBARMENT (FEB 1988)

A breach of the contract clauses entitled Davis-Bacon Act, Contract Work Hours and Safety Standards Act--Overtime Compensation, Apprentices and Trainees, Payrolls and Basic Records, Compliance with Copeland Act Requirements, Subcontracts (Labor Standards), Compliance with Davis-Bacon and Related Act Regulations, or Certification of Eligibility may be grounds for termination of the contract, and for debarment as a Contractor and subcontractor as provided in 29 CFR 5.12.

(End of clause)

52.222-13 COMPLIANCE WITH DAVIS-BACON AND RELATED ACT REGULATIONS (FEB 1988)

All rulings and interpretations of the Davis-Bacon and Related Acts contained in 29 CFR Parts 1, 3, and 5 are hereby incorporated by reference in this contract.

(End of clause)

52.222-14 DISPUTES CONCERNING LABOR STANDARDS (FEB 1988)

The United States Department of Labor has set forth in 29 CFR Parts 5, 6, and 7 procedures for resolving disputes concerning labor standards requirements. Such disputes shall be resolved in accordance with those procedures and not the Disputes clause of this contract. Disputes within the meaning of this clause include disputes between the Contractor (or any of its subcontractors) and the contracting agency, the U.S. Department of Labor, or the employees or their representatives.

(End of clause)

52.222-15 CERTIFICATION OF ELIGIBILITY (FEB 1988)

(a) By entering into this contract, the Contractor certifies that neither it (nor he or she) nor any person or firm who has an interest in the Contractor's firm is a person or firm ineligible to be awarded Government contracts by virtue of section 3(a) of the Davis-Bacon Act or 29 CFR 5.12(a)(1).

(b) No part of this contract shall be subcontracted to any person or firm ineligible for award of a Government contract by virtue of section 3(a) of the Davis-Bacon Act or 29 CFR 5.12(a)(1).

(d) The penalty for making false statements is prescribed in the U.S. Criminal Code, 18 U.S.C. 1001.

(End of clause)

52.222-26 EQUAL OPPORTUNITY (APR 2002)

(a) Definition. United States, as used in this clause, means the 50 States, the District of Columbia, Puerto Rico, the Northern Mariana Islands, American Samoa, Guam, the U.S. Virgin Islands, and Wake Island.

(b) If, during any 12-month period (including the 12 months preceding the award of this contract), the Contractor has been or is awarded nonexempt Federal contracts and/or subcontracts that have an aggregate value in excess of $10,000, the Contractor shall comply with paragraphs (b)(1) through (b)(11) of this clause, except for work performed outside the United States by employees who were not recruited within the United States. Upon request, the Contractor shall provide information necessary to determine the applicability of this clause.

(1) The Contractor shall not discriminate against any employee or applicant for employment because of race, color, religion, sex, or national origin. However, it shall not be a violation of this clause for the Contractor to extend a publicly announced preference in employment to Indians living on or near an Indian reservation, in connection with employment opportunities on or near an Indian reservation, as permitted by 41 CFR 60-1.5.

(2) The Contractor shall take affirmative action to ensure that applicants are employed, and that employees are treated during employment, without regard to their race, color, religion, sex, or national origin. This shall include, but not be limited to, (i) employment, (ii) upgrading, (iii) demotion, (iv) transfer, (v) recruitment or recruitment advertising, (vi) layoff or termination, (vii) rates of pay or other forms of compensation, and (viii) selection for training, including apprenticeship.

(3) The Contractor shall post in conspicuous places available to employees and applicants for employment

the notices to be provided by the Contracting Officer that explain this clause.

(4) The Contractor shall, in all solicitations or advertisements for employees placed by or on behalf of the Contractor, state that all qualified applicants will receive consideration for employment without regard to race, color, religion, sex, or national origin.

(5) The Contractor shall send, to each labor union or representative of workers with which it has a collective bargaining agreement or other contract or understanding, the notice to be provided by the Contracting Officer advising the labor union or workers' representative of the Contractor's commitments under this clause, and post copies of the notice in conspicuous places available to employees and applicants for employment.

(6) The Contractor shall comply with Executive Order 11246, as amended, and the rules, regulations, and orders of the Secretary of Labor.

(7) The Contractor shall furnish to the contracting agency all information required by Executive Order 11246, as amended, and by the rules, regulations, and orders of the Secretary of Labor. The Contractor shall also file Standard Form 100 (EEO-1), or any successor form, as prescribed in 41 CFR part 60-1. Unless the Contractor has filed within the 12 months preceding the date of contract award, the Contractor shall, within 30 days after contract award, apply to either the regional Office of Federal Contract Compliance Programs (OFCCP) or the local office of the Equal Employment Opportunity Commission for the necessary forms.

(8) The Contractor shall permit access to its premises, during normal business hours, by the contracting agency or the OFCCP for the purpose of conducting on-site compliance evaluations and complaint investigations. The Contractor shall permit the Government to inspect and copy any books, accounts, records (including computerized records), and other material that may be relevant to the matter under investigation and pertinent to compliance with Executive Order 11246, as amended, and rules and regulations that implement the Executive Order.

(9) If the OFCCP determines that the Contractor is not in compliance with this clause or any rule, regulation, or order of the Secretary of Labor, this contract may be canceled, terminated, or suspended in whole or in part and the Contractor may be declared ineligible for further Government contracts, under the procedures authorized in Executive Order 11246, as amended. In addition, sanctions may be imposed and remedies invoked against the Contractor as provided in Executive Order 11246, as amended; in the rules, regulations, and orders of the Secretary of Labor; or as otherwise provided by law.

(10) The Contractor shall include the terms and conditions of subparagraphs (b)(1) through (11) of this clause in every subcontract or purchase order that is not exempted by the rules, regulations, or orders of the Secretary of Labor issued under Executive Order 11246, as amended, so that these terms and conditions will be binding upon each subcontractor or vendor.

(11) The Contractor shall take such action with respect to any subcontract or purchase order as the contracting officer may direct as a means of enforcing these terms and conditions, including sanctions for noncompliance; provided, that if the Contractor becomes involved in, or is threatened with, litigation with a subcontractor or vendor as a result of any direction, the Contractor may request the United States to enter into the litigation to protect the interests of the United States.

(c) Notwithstanding any other clause in this contract, disputes relative to this clause will be governed by the procedures in 41 CFR 60-1.1.

(End of clause)

52.222-27 AFFIRMATIVE ACTION COMPLIANCE REQUIREMENTS FOR CONSTRUCTION (FEB 1999)

(a) Definitions. "Covered area," as used in this clause, means the geographical area described in the solicitation for this contract.

"Deputy Assistant Secretary," as used in this clause, means Deputy Assistant Secretary for Federal Contract Compliance, U.S. Department of Labor, or a designee.

"Employer's identification number," as used in this clause, means the Federal Social Security number used on the employer's quarterly federal tax return, U.S. Treasury Department Form 941.

"Minority," as used in this clause, means--

(1) American Indian or Alaskan Native (all persons having origins in any of the original peoples of North America and maintaining identifiable tribal affiliations through membership and participation or community identification).

(2) Asian and Pacific Islander (all persons having origins in any of the original peoples of the Far East, Southeast Asia, the Indian Subcontinent, or the Pacific Islands);

(3) Black (all persons having origins in any of the black African racial groups not of Hispanic origin); and

(4) Hispanic (all persons of Mexican, Puerto Rican, Cuban, Central or South American, or other Spanish culture or origin, regardless of race).

(b) If the Contractor, or a subcontractor at any tier, subcontracts a portion of the work involving any construction trade, each such subcontract in excess of $10,000 shall include this clause and the Notice containing the goals for minority and female participation stated in the solicitation for this contract.

(c) If the Contractor is participating in a Hometown Plan (41 CFR 60-4) approved by the U.S. Department of Labor in a covered area, either individually or through an association, its affirmative action obligations on all work in the plan area (including goals) shall comply with the plan for those trades that have unions participating in the plan. Contractors must be able to demonstrate participation in, and compliance with, the provisions of the plan. Each Contractor or subcontractor participating in an approved plan is also required to comply with its obligations under the Equal Opportunity clause, and to make a good faith effort to achieve each goal under the plan in each trade in which it has employees. The overall good-faith performance by other Contractors or subcontractors toward a goal in an approved plan does not excuse any Contractor's or subcontractor's failure to make good-faith efforts to achieve the plan's goals.

(d) The Contractor shall implement the affirmative action procedures in subparagraphs (g)(1) through (16) of this clause. The goals stated in the solicitation for this contract are expressed as percentages of the total hours of employment and training of minority and female utilization that the Contractor should reasonably be able to achieve in each construction trade in which it has employees in the covered area. If the Contractor performs construction work in a geographical area located outside of the covered area, it shall apply the goals established for the geographical area where that work is actually performed. The Contractor is expected to make substantially uniform progress toward its goals in each craft.

(e) Neither the terms and conditions of any collective bargaining agreement, nor the failure by a union with which the Contractor has a collective bargaining agreement, to refer minorities or women shall excuse the Contractor's obligations under this clause, Executive Order 11246, as amended, or the regulations thereunder.

(f) In order for the nonworking training hours of apprentices and trainees to be counted in meeting the goals, apprentices and trainees must be employed by the Contractor during the training period, and the Contractor must have made a commitment to employ the apprentices and trainees at the completion of their

training, subject to the availability of employment opportunities. Trainees must be trained pursuant to training programs approved by the U.S. Department of Labor.

(g) The Contractor shall take affirmative action to ensure equal employment opportunity. The evaluation of the Contractor's compliance with this clause shall be based upon its effort to achieve maximum results from its actions. The Contractor shall document these efforts fully and implement affirmative action steps at least as extensive as the following:

(1) Ensure a working environment free of harassment, intimidation, and coercion at all sites and in all facilities where the Contractor's employees are assigned to work. The Contractor, if possible, will assign two or more women to each construction project. The Contractor shall ensure that foremen, superintendents, and other onsite supervisory personnel are aware of and carry out the Contractor's obligation to maintain such a working environment, with specific attention to minority or female individuals working at these sites or facilities.

(2) Establish and maintain a current list of sources for minority and female recruitment. Provide written notification to minority and female recruitment sources and community organizations when the Contractor or its unions have employment opportunities available, and maintain a record of the organizations' responses.

(3) Establish and maintain a current file of the names, addresses, and telephone numbers of each minority and female off-the-street applicant, referrals of minorities or females from unions, recruitment sources, or community organizations, and the action taken with respect to each individual. If an individual was sent to the union hiring hall for referral and not referred back to the Contractor by the union or, if referred back, not employed by the
Contractor, this shall be documented in the file, along with whatever additional actions the Contractor may have taken.

(4) Immediately notify the Deputy Assistant Secretary when the union or unions with which the Contractor has a collective bargaining agreement has not referred back to the Contractor a minority or woman sent by the Contractor, or when the Contractor has other information that the union referral process has impeded the Contractor's efforts to meet its obligations.

(5) Develop on-the-job training opportunities and/or participate in training programs for the area that expressly include minorities and women, including upgrading programs and apprenticeship and trainee programs relevant to the Contractor's employment needs, especially those programs funded or approved by the Department of Labor. The Contractor shall provide notice of these programs to the sources compiled under subparagraph (g)(2) of this clause.

(6) Disseminate the Contractor's equal employment policy by--

(i) Providing notice of the policy to unions and to training, recruitment, and outreach programs, and requesting their cooperation in assisting the Contractor in meeting its contract obligations;

(ii) Including the policy in any policy manual and in collective bargaining agreements;

(iii) Publicizing the policy in the company newspaper, annual report, etc.;

(iv) Reviewing the policy with all management personnel and with all minority and female employees at least once a year; and

(v) Posting the policy on bulletin boards accessible to employees at each location where construction work is performed.

(7) Review, at least annually, the Contractor's equal employment policy and affirmative action obligations with all employees having responsibility for hiring, assignment, layoff, termination, or other employment

decisions. Conduct review of this policy with all on-site supervisory personnel before initiating construction work at a job site. A written record shall be made and maintained identifying the time and place of these meetings, persons attending, subject matter discussed, and disposition of the subject matter.

(8) Disseminate the Contractor's equal employment policy externally by including it in any advertising in the news media, specifically including minority and female news media. Provide written notification to, and discuss this policy with, other Contractors and subcontractors with which the Contractor does or anticipates doing business.

(9) Direct recruitment efforts, both oral and written, to minority, female, and community organizations, to schools with minority and female students, and to minority and female recruitment and training organizations serving the Contractor's recruitment area and employment needs. Not later than 1 month before the date for acceptance of applications for apprenticeship or training by any recruitment source, send written notification to organizations such as the above, describing the openings, screening procedures, and tests to be used in the selection process.

(10) Encourage present minority and female employees to recruit minority persons and women. Where reasonable, provide after-school, summer, and vacation employment to minority and female youth both on the site and in other areas of the Contractor's workforce.

(11) Validate all tests and other selection requirements where required under 41 CFR 60-3.

(12) Conduct, at least annually, an inventory and evaluation at least of all minority and female personnel for promotional opportunities. Encourage these employees to seek or to prepare for, through appropriate training, etc., opportunities for promotion.

(13) Ensure that seniority practices, job classifications, work assignments, and other personnel practices do not have a discriminatory effect by continually monitoring all personnel and employment-related activities to ensure that the Contractor's obligations under this contract are being carried out.

(14) Ensure that all facilities and company activities are nonsegregated except that separate or single-user rest rooms and necessary dressing or sleeping areas shall be provided to assure privacy between the sexes.

(15) Maintain a record of solicitations for subcontracts for minority and female construction contractors and suppliers, including circulation of solicitations to minority and female contractor associations and other business associations.

(16) Conduct a review, at least annually, of all supervisors' adherence to and performance under the Contractor's equal employment policy and affirmative action obligations.

(h) The Contractor is encouraged to participate in voluntary associations that may assist in fulfilling one or more of the affirmative action obligations contained in subparagraphs (g)(1) through (16) of this clause. The efforts of a contractor association, joint contractor-union, contractor-community, or similar group of which the contractor is a member and participant may be asserted as fulfilling one or more of its obligations under subparagraphs (g)(1) through (16) of this clause, provided the Contractor--

(1) Actively participates in the group;

(2) Makes every effort to ensure that the group has a positive impact on the employment of minorities and women in the industry;

(3) Ensures that concrete benefits of the program are reflected in the Contractor's minority and female workforce participation;

(4) Makes a good-faith effort to meet its individual goals and timetables; and

(5) Can provide access to documentation that demonstrates the effectiveness of actions taken on behalf of the Contractor. The obligation to comply is the Contractor's, and failure of such a group to fulfill an obligation shall not be a defense for the Contractor's noncompliance.

(i) A single goal for minorities and a separate single goal for women shall be established. The Contractor is required to provide equal employment opportunity and to take affirmative action for all minority groups, both male and female, and all women, both minority and nonminority. Consequently, the Contractor may be in violation of Executive Order 11246, as amended, if a particular group is employed in a substantially disparate manner.

(j) The Contractor shall not use goals or affirmative action standards to discriminate against any person because of race, color, religion, sex, or national origin.

(k) The Contractor shall not enter into any subcontract with any person or firm debarred from Government contracts under Executive Order 11246, as amended.

(l) The Contractor shall carry out such sanctions and penalties for violation of this clause and of the Equal Opportunity clause, including suspension, termination, and cancellation of existing subcontracts, as may be imposed or ordered under Executive Order 11246, as amended, and its implementing regulations, by the OFCCP. Any failure to carry out these sanctions and penalties as ordered shall be a violation of this clause and Executive Order 11246, as amended.

(m) The Contractor in fulfilling its obligations under this clause shall implement affirmative action procedures at least as extensive as those prescribed in paragraph (g) of this clause, so as to achieve maximum results from its efforts to ensure equal employment opportunity. If the Contractor fails to comply with the requirements of Executive Order 11246, as amended, the implementing regulations, or this clause, the Deputy Assistant Secretary shall take action as prescribed in 41 CFR 60-4.8.

(n) The Contractor shall designate a responsible official to--

(1) Monitor all employment-related activity to ensure that the Contractor's equal employment policy is being carried out;

(2) Submit reports as may be required by the Government; and

(3) Keep records that shall at least include for each employee the name, address, telephone number, construction trade, union affiliation (if any), employee identification number, social security number, race, sex, status (e.g., mechanic, apprentice, trainee, helper, or laborer), dates of changes in status, hours worked per week in the indicated trade, rate of pay, and locations at which the work was performed. Records shall be maintained in an easily understandable and retrievable form; however, to the degree that existing records satisfy this requirement, separate records are not required to be maintained.

Nothing contained herein shall be construed as a limitation upon the application of other laws that establish different standards of compliance or upon the requirements for the hiring of local or other area residents (e.g., those under the Public Works Employment Act of 1977 and the Community Development Block Grant Program).

(End of clause)

52.222-35 EQUAL OPPORTUNITY FOR SPECIAL DISABLED VETERANS, VETERANS OF THE VIETNAM ERA, AND OTHER ELIGIBLE VETERANS (DEC 2001)

(a) Definitions. As used in this clause--

All employment openings means all positions except executive and top management, those positions that will be filled from within the Contractor's organization, and positions lasting 3 days or less. This term

includes full-time employment, temporary employment of more than 3 days duration, and part-time employment.

Executive and top management means any employee--

(1) Whose primary duty consists of the management of the enterprise in which the individual is employed or of a customarily recognized department or subdivision thereof;

(2) Who customarily and regularly directs the work of two or more other employees;

(3) Who has the authority to hire or fire other employees or whose suggestions and recommendations as to the hiring or firing and as to the advancement and promotion or any other change of status of other employees will be given particular weight;

(4) Who customarily and regularly exercises discretionary powers; and

(5) Who does not devote more than 20 percent or, in the case of an employee of a retail or service establishment, who does not devote more than 40 percent of total hours of work in the work week to activities that are not directly and closely related to the performance of the work described in paragraphs (1) through (4) of this definition. This paragraph (5) does not apply in the case of an employee who is in sole charge of an establishment or a physically separated branch establishment, or who owns at least a 20 percent interest in the enterprise in which the individual is employed.

Other eligible veteran means any other veteran who served on active duty during a war or in a campaign or expedition for which a campaign badge has been authorized.

Positions that will be filled from within the Contractor's organization means employment openings for which the Contractor will give no consideration to persons outside the Contractor's organization (including any affiliates, subsidiaries, and parent companies) and includes any openings the Contractor proposes to fill from regularly established “recall” lists. The exception does not apply to a particular opening once an employer decides to consider applicants outside of its organization.

Qualified special disabled veteran means a special disabled veteran who satisfies the requisite skill, experience, education, and other job-related requirements of the employment position such veteran holds or desires, and who, with or without reasonable accommodation, can perform the essential functions of such position.

Special disabled veteran means--

(1) A veteran who is entitled to compensation (or who but for the receipt of military retired pay would be entitled to compensation) under laws administered by the Department of Veterans Affairs for a disability--

(i) Rated at 30 percent or more; or

(ii) Rated at 10 or 20 percent in the case of a veteran who has been determined under 38 U.S.C. 3106 to have a serious employment handicap (i.e., a significant impairment of the veteran's ability to prepare for, obtain, or retain employment consistent with the veteran's abilities, aptitudes, and interests); or

(2) A person who was discharged or released from active duty because of a service-connected disability.

Veteran of the Vietnam era means a person who--

(1) Served on active duty for a period of more than 180 days and was discharged or released from active duty with other than a dishonorable discharge, if any part of such active duty occurred--

(i) In the Republic of Vietnam between February 28, 1961, and May 7, 1975; or

(ii) Between August 5, 1964, and May 7, 1975, in all other cases; or

(2) Was discharged or released from active duty for a service-connected disability if any part of the active duty was performed--

(i) In the Republic of Vietnam between February 28, 1961, and May 7, 1975; or

(ii) Between August 5, 1964, and May 7, 1975, in all other cases.
(b) General. (1) The Contractor shall not discriminate against the individual because the individual is a special disabled veteran, a veteran of the Vietnam era, or other eligible veteran, regarding any position for which the employee or applicant for employment is qualified. The Contractor shall take affirmative action to employ, advance in employment, and otherwise treat qualified special disabled veterans, veterans of the Vietnam era, and other eligible veterans without discrimination based upon their disability or veterans' status in all employment practices such as--

(i) Recruitment, advertising, and job application procedures;

(ii) Hiring, upgrading, promotion, award of tenure, demotion, transfer, layoff, termination, right of return from layoff and rehiring;

(iii) Rate of pay or any other form of compensation and changes in compensation;

(iv) Job assignments, job classifications, organizational structures, position descriptions, lines of progression, and seniority lists;

(v) Leaves of absence, sick leave, or any other leave;

(vi) Fringe benefits available by virtue of employment, whether or not administered by the Contractor;

(vii) Selection and financial support for training, including apprenticeship, and on-the-job training under 38 U.S.C. 3687, professional meetings, conferences, and other related activities, and selection for leaves of absence to pursue training;

(viii) Activities sponsored by the Contractor including social or recreational programs; and

(ix) Any other term, condition, or privilege of employment.

(2) The Contractor shall comply with the rules, regulations, and relevant orders of the Secretary of Labor issued under the Vietnam Era Veterans' Readjustment Assistance Act of 1972 (the Act), as amended (38 U.S.C. 4211 and 4212).

(c) Listing openings. (1) The Contractor shall immediately list all employment openings that exist at the time of the execution of this contract and those which occur during the performance of this contract, including those not generated by this contract, and including those occurring at an establishment of the Contractor other than the one where the contract is being performed, but excluding those of independently operated corporate affiliates, at an appropriate local public employment service office of the State wherein the opening occurs. Listing employment openings with the U.S. Department of Labor's America's Job Bank shall satisfy the requirement to list jobs with the local employment service office.

(2) The Contractor shall make the listing of employment openings with the local employment service office at least concurrently with using any other recruitment source or effort and shall involve the normal obligations of placing a bona fide job order, including accepting referrals of veterans and nonveterans. This listing of employment openings does not require hiring any particular job applicant or hiring from any particular group of job applicants and is not intended to relieve the Contractor from any requirements of Executive orders or regulations concerning nondiscrimination in employment.

(3) Whenever the Contractor becomes contractually bound to the listing terms of this clause, it shall advise the State public employment agency in each State where it has establishments of the name and location of each hiring location in the State. As long as the Contractor is contractually bound to these terms and has so advised the State agency, it need not advise the State agency of subsequent contracts. The Contractor may advise the State agency when it is no longer bound by this contract clause.

(d) Applicability. This clause does not apply to the listing of employment openings that occur and are filled outside the 50 States, the District of Columbia, the Commonwealth of Puerto Rico, the Commonwealth of the Northern Mariana Islands, American Samoa, Guam, the Virgin Islands of the United States, and Wake Island.

(e) Postings. (1) The Contractor shall post employment notices in conspicuous places that are available to employees and applicants for employment.

(2) The employment notices shall--

(i) State the rights of applicants and employees as well as the Contractor's obligation under the law to take affirmative action to employ and advance in employment qualified employees and applicants who are special disabled veterans, veterans of the Vietnam era, and other eligible veterans; and

(ii) Be in a form prescribed by the Deputy Assistant Secretary for Federal Contract Compliance Programs, Department of Labor (Deputy Assistant Secretary of Labor), and provided by or through the Contracting Officer.

(3) The Contractor shall ensure that applicants or employees who are special disabled veterans are informed of the contents of the notice (e.g., the Contractor may have the notice read to a visually disabled veteran, or may lower the posted notice so that it can be read by a person in a wheelchair).

(4) The Contractor shall notify each labor union or representative of workers with which it has a collective bargaining agreement, or other contract understanding, that the Contractor is bound by the terms of the Act and is committed to take affirmative action to employ, and advance in employment, qualified special disabled veterans, veterans of the Vietnam era, and other eligible veterans.

(f) Noncompliance. If the Contractor does not comply with the requirements of this clause, the Government may take appropriate actions under the rules, regulations, and relevant orders of the Secretary of Labor issued pursuant to the Act.

(g) Subcontracts. The Contractor shall insert the terms of this clause in all subcontracts or purchase orders of $25,000 or more unless exempted by rules, regulations, or orders of the Secretary of Labor. The Contractor shall act as specified by the Deputy Assistant Secretary of Labor to enforce the terms, including action for noncompliance.

(End of clause)

52.222-36 AFFIRMATIVE ACTION FOR WORKERS WITH DISABILITIES (JUN 1998)

(a) General. (1) Regarding any position for which the employee or applicant for employment is qualified, the Contractor shall not discriminate against any employee or applicant because of physical or mental disability. The Contractor agrees to take affirmative action to employ, advance in employment, and otherwise treat qualified individuals with disabilities without discrimination based upon their physical or mental disability in all employment practices such as--

(i) Recruitment, advertising, and job application procedures;

(ii) Hiring, upgrading, promotion, award of tenure, demotion, transfer, layoff, termination, right of return from layoff, and rehiring;

(iii) Rates of pay or any other form of compensation and changes in compensation;

(iv) Job assignments, job classifications, organizational structures, position descriptions, lines of progression, and seniority lists;

(v) Leaves of absence, sick leave, or any other leave;

(vi) Fringe benefits available by virtue of employment, whether or not administered by the Contractor;

(vii) Selection and financial support for training, including apprenticeships, professional meetings, conferences, and other related activities, and selection for leaves of absence to pursue training;

(viii) Activities sponsored by the Contractor, including social or recreational programs; and

(ix) Any other term, condition, or privilege of employment.

(2) The Contractor agrees to comply with the rules, regulations, and relevant orders of the Secretary of Labor (Secretary) issued under the Rehabilitation Act of 1973 (29 U.S.C. 793) (the Act), as amended.

(b) Postings. (1) The Contractor agrees to post employment notices stating--

(i) The Contractor's obligation under the law to take affirmative action to employ and advance in employment qualified individuals with disabilities; and

(ii) The rights of applicants and employees.

(2) These notices shall be posted in conspicuous places that are available to employees and applicants for employment. The Contractor shall ensure that applicants and employees with disabilities are informed of the contents of the notice (e.g., the Contractor may have the notice read to a visually disabled individual, or may lower the posted notice so that it might be read by a person in a wheelchair). The notices shall be in a form prescribed by the Deputy Assistant Secretary for Federal Contract Compliance of the U.S. Department of Labor (Deputy Assistant Secretary) and shall be provided by or through the Contracting Officer.

(3) The Contractor shall notify each labor union or representative of workers with which it has a collective bargaining agreement or other contract understanding, that the Contractor is bound by the terms of Section 503 of the Act and is committed to take affirmative action to employ, and advance in employment, qualified individuals with physical or mental disabilities.

(c) Noncompliance. If the Contractor does not comply with the requirements of this clause, appropriate actions may be taken under the rules, regulations, and relevant orders of the Secretary issued pursuant to the Act.

(d) Subcontracts. The Contractor shall include the terms of this clause in every subcontract or purchase order in excess of $10,000 unless exempted by rules, regulations, or orders of the Secretary. The Contractor shall act as specified by the Deputy Assistant Secretary to enforce the terms, including action for noncompliance.

(End of clause)

52.222-37 EMPLOYMENT REPORTS ON SPECIAL DISABLED VETERANS, VETERANS OF THE VIETNAM ERA, AND OTHER ELIGIBLE VETERANS (DEC 2001)

(a) Unless the Contractor is a State or local government agency, the Contractor shall report at least annually, as required by the Secretary of Labor, on--

(1) The number of disabled veterans and the number of veterans of the Vietnam era in the workforce of the contractor by job category and hiring location; and

(2) The total number of new employees hired during the period covered by the report, and of that total, the number of disabled veterans, and the number of veterans of the Vietnam era.

(b) The above items shall be reported by completing the form entitled "Federal Contractor Veterans' Employment Report VETS-100."

(c) Reports shall be submitted no later than September 30 of each year beginning September 30, 1988.

(d) The employment activity report required by paragraph (a)(2) of this clause shall reflect total hires during the most recent 12-month period as of the ending date selected for the employment profile report required by paragraph (a)(1) of this clause. Contractors may select an ending date: (1) As of the end of any pay period during the period January through March 1st of the year the report is due, or (2) as of December 31, if the contractor has previous written approval from the Equal Employment Opportunity Commission to do so for purposes of submitting the Employer Information Report EEO-1 (Standard Form 100).

(e) The count of veterans reported according to paragraph (a) of this clause shall be based on voluntary disclosure. Each Contractor subject to the reporting requirements at 38 U.S.C. 4212 shall invite all disabled veterans and veterans of the Vietnam era who wish to benefit under the affirmative action program at 38 U.S.C. 4212 to identify themselves to the Contractor. The invitation shall state that the information is voluntarily provided; that the information will be kept confidential; that disclosure or refusal to provide the information will not subject the applicant or employee to any adverse treatment; and that the information will be used only in accordance with the regulations promulgated under 38 U.S.C. 4212.

(f) Subcontracts. The Contractor shall include the terms of this clause in every subcontract or purchase order of $10,000 or more unless exempted by rules, regulations, or orders of the Secretary.

(End of clause)

52.222-38 COMPLIANCE WITH VETERANS' EMPLOYMENT REPORTING REQUIREMENTS (DEC 2001)

By submission of its offer, the offeror represents that, if it is subject to the reporting requirements of 38 U.S.C. 4212(d) (i.e., if it has any contract containing Federal Acquisition Regulation clause 52.222-37, Employment Reports on Special Disabled Veterans, Veterans of the Vietnam Era, and Other Eligible Veterans), it has submitted the most recent VETS-100 Report required by that clause.

(End of provision)

52.223-3 HAZARDOUS MATERIAL IDENTIFICATION AND MATERIAL SAFETY DATA (JAN 1997)

(a) "Hazardous material", as used in this clause, includes any material defined as hazardous under the latest version of Federal Standard No. 313 (including revisions adopted during the term of the contract).

(b) The offeror must list any hazardous material, as defined in paragraph (a) of this clause, to be delivered under this contract. The hazardous material shall be properly identified and include any applicable identification number, such as National Stock Number or Special Item Number. This information shall also be included on the Material Safety Data Sheet submitted under this contract.

Material Identification No.

(If none,
insert "None")

_____ _____

_____ _____

_____ _____

(c) This list must be updated during performance of the contract whenever the Contractor determines that any other material to be delivered under this contract is hazardous.

(d) The apparently successful offeror agrees to submit, for each item as required prior to award, a Material Safety Data Sheet, meeting the requirements of 29 CFR 1910.1200(g) and the latest version of Federal Standard No. 313, for all hazardous material identified in paragraph (b) of this clause. Data shall be submitted in accordance with Federal Standard No. 313, whether or not the apparently successful offeror is the actual manufacturer of these items. Failure to submit the Material Safety Data Sheet prior to award may result in the apparently successful offeror being considered nonresponsible and ineligible for award.

(e) If, after award, there is a change in the composition of the item(s) or a revision to Federal Standard No. 313, which renders incomplete or inaccurate the data submitted under paragraph (d) of this clause, the Contractor shall promptly notify the Contracting Officer and resubmit the data.

(f) Neither the requirements of this clause nor any act or failure to act by the Government shall relieve the Contractor of any responsibility or liability for the safety of Government, Contractor, or subcontractor personnel or property.

(g) Nothing contained in this clause shall relieve the Contractor from complying with applicable Federal, State, and local laws, codes, ordinances, and regulations (including the obtaining of licenses and permits) in connection with hazardous material.

(h) The Government's rights in data furnished under this contract with respect to hazardous material are as follows:

(1) To use, duplicate and disclose any data to which this clause is applicable. The purposes of this right are to--

(i) Apprise personnel of the hazards to which they may be exposed in using, handling, packaging, transporting, or disposing of hazardous materials;

(ii) Obtain medical treatment for those affected by the material; and

(iii) Have others use, duplicate, and disclose the data for the Government for these purposes.

(2) To use, duplicate, and disclose data furnished under this clause, in accordance with subparagraph (h)(1) of this clause, in precedence over any other clause of this contract providing for rights in data.

(3) The Government is not precluded from using similar or identical data acquired from other sources.

(End of clause)

52.223-5 POLLUTION PREVENTION AND RIGHT-TO-KNOW INFORMATION (AUG 2003)

(a) Definitions. As used in this clause--

Priority chemical means a chemical identified by the Interagency Environmental Leadership Workgroup or, alternatively, by an agency pursuant to section 503 of Executive Order 13148 of April 21, 2000, Greening the Government through Leadership in Environmental Management.

“Toxic chemical means a chemical or chemical category listed in 40 CFR 372.65.”

(b) Executive Order 13148 requires Federal facilities to comply with the provisions of the Emergency Planning and Community Right-to-Know Act of 1986 (EPCRA) (42 U.S.C. 11001-11050) and the Pollution Prevention Act of 1990 (PPA) (42 U.S.C. 13101-13109).

(c) The Contractor shall provide all information needed by the Federal facility to comply with the following:

(1) The emergency planning reporting requirements of section 302 of EPCRA.

(2) The emergency notice requirements of section 304 of EPCRA.

(3) The list of Material Safety Data Sheets, required by section 311 of EPCRA.

(4) The emergency and hazardous chemical inventory forms of section 312 of EPCRA.

(5) The toxic chemical release inventory of section 313 of EPCRA, which includes the reduction and recycling information required by section 6607 of PPA.

(6) The toxic chemical, priority chemical, and hazardous substance release and use reduction goals of sections 502 and 503 of Executive Order 13148.

(End of clause)

52.223-6 DRUG-FREE WORKPLACE (MAY 2001)

(a) Definitions. As used in this clause --

"Controlled substance" means a controlled substance in schedules I through V of section 202 of the Controlled Substances Act (21 U.S.C. 812) and as further defined in regulation at 21 CFR 1308.11 - 1308.15.

"Conviction" means a finding of guilt (including a plea of nolo contendere) or imposition of sentence, or both, by any judicial body charged with the responsibility to deter- mine violations of the Federal or State criminal drug statutes.

"Criminal drug statute" means a Federal or non-Federal criminal statute involving the manufacture, distribution, dispensing, possession, or use of any controlled substance.

"Drug-free workplace" means the site(s) for the performance of work done by the Contractor in connection with a specific contract at which employees of the Contractor are prohibited from engaging in the unlawful manufacture, distribution, dispensing, possession, or use of a controlled substance.

"Employee" means an employee of a Contractor directly engaged in the performance of work under a Government contract. "Directly engaged" is defined to include all direct cost employees and any other Contractor employee who has other than a minimal impact or involvement in contract performance.

"Individual" means an offeror/contractor that has no more than one employee including the offeror/contractor.

(b) The Contractor, if other than an individual, shall-- within 30 days after award (unless a longer period is

agreed to in writing for contracts of 30 days or more performance duration), or as soon as possible for contracts of less than 30 days performance duration--

(1) Publish a statement notifying its employees that the unlawful manufacture, distribution, dispensing, possession, or use of a controlled substance is prohibited in the Contractor's workplace and specifying the actions that will be taken against employees for violations of such prohibition;

(2) Establish an ongoing drug-free awareness program to inform such employees about--

(i) The dangers of drug abuse in the workplace;

(ii) The Contractor's policy of maintaining a drug-free workplace;

(iii) Any available drug counseling, rehabilitation, and employee assistance programs; and

(iv) The penalties that may be imposed upon employees for drug abuse violations occurring in the workplace;

(3) Provide all employees engaged in performance of the contract with a copy of the statement required by subparagraph (b)(1) of this clause;

(4) Notify such employees in writing in the statement required by subparagraph (b)(1) of this clause that, as a condition of continued employment on this contract, the employee will--

(i) Abide by the terms of the statement; and

(ii) Notify the employer in writing of the employee's conviction under a criminal drug statute for a violation occurring in the workplace no later than 5 days after such conviction.

(5) Notify the Contracting Officer in writing within 10 days after receiving notice under subdivision (b)(4)(ii) of this clause, from an employee or otherwise receiving actual notice of such conviction. The notice shall include the position title of the employee;

(6) Within 30 days after receiving notice under subdivision (b)(4)(ii) of this clause of a conviction, take one of the following actions with respect to any employee who is convicted of a drug abuse violation occurring in the workplace:

(i) Taking appropriate personnel action against such employee, up to and including termination; or

(ii) Require such employee to satisfactorily participate in a drug abuse assistance or rehabilitation program approved for such purposes by a Federal, State, or local health, law enforcement, or other appropriate agency; and

(7) Make a good faith effort to maintain a drug-free workplace through implementation of subparagraphs (b)(1) though (b)(6) of this clause.

(c) The Contractor, if an individual, agrees by award of the contract or acceptance of a purchase order, not to engage in the unlawful manufacture, distribution, dispensing, possession, or use of a controlled substance while performing this contract.

(d) In addition to other remedies available to the Government, the Contractor's failure to comply with the requirements of paragraph (b) or (c) of this clause may, pursuant to FAR 23.506, render the Contractor subject to suspension of contract payments, termination of the contract for default, and suspension or debarment.

(End of clause)

52.223-14 TOXIC CHEMICAL RELEASE REPORTING (AUG 2003)

(a) Unless otherwise exempt, the Contractor, as owner or operator of a facility used in the performance of this contract, shall file by July 1 for the prior calendar year an annual Toxic Chemical Release Inventory Form (Form R) as described in sections 313(a) and (g) of the Emergency Planning and Community Right-to-Know Act of 1986 (EPCRA) (42 U.S.C. 11023(a) and (g)), and section 6607 of the Pollution Prevention Act of 1990 (PPA) (42 U.S.C. 13106). The Contractor shall file, for each facility subject to the Form R filing and reporting requirements, the annual Form R throughout the life of the contract.

(b) A Contractor-owned or -operated facility used in the performance of this contract is exempt from the requirement to file an annual Form R if--

(1) The facility does not manufacture, process, or otherwise use any toxic chemicals listed in 40 CFR 372.65;

(2) The facility does not have 10 or more full-time employees as specified in section 313(b)(1)(A) of EPCRA, 42 U.S.C. 11023(b)(1)(A);

(3) The facility does not meet the reporting thresholds of toxic chemicals established under of EPCRA, 42 U.S.C. 11023(f) (including the alternate thresholds at 40 CFR 372.27, provided an appropriate certification form has been filed with EPA);

(4) The facility does not fall within the following Standard Industrial Classification (SIC) codes or their corresponding North American Industry Classification System sectors:

(i) Major group code 10 (except 1011, 1081, and 1094.

(ii) Major group code 12 (except 1241).

(iii) Major group codes 20 through 39.

(iv) Industry code 4911, 4931, or 4939 (limited to facilities that combust coal and/or oil for the purpose of generating power for distribution in commerce).

(v) Industry code 4953 (limited to facilities regulated under the Resource Conservation and Recovery Act, Subtitle C (42 U.S.C. 6921, et seq.)), 5169, 5171, or 7389 (limited to facilities primarily engaged in solvent recovery services on a contract or fee basis); or

(5) The facility is not located in the United States or its outlying areas.

(c) If the Contractor has certified to an exemption in accordance with one or more of the criteria in paragraph (b) of this clause, and after award of the contract circumstances change so that any of its owned or operated facilities used in the performance of this contract is no longer exempt--

(1) The Contractor shall notify the Contracting Officer; and

(2) The Contractor, as owner or operator of a facility used in the performance of this contract that is no longer exempt, shall (i) submit a Toxic Chemical Release Inventory Form (Form R) on or before July 1 for the prior calendar year during which the facility becomes eligible; and (ii) continue to file the annual Form R for the life of the contract for such facility.

(d) The Contracting Officer may terminate this contract or take other action as appropriate, if the Contractor fails to comply accurately and fully with the EPCRA and PPA toxic chemical release filing and reporting requirements.

(e) Except for acquisitions of commercial items, as defined in FAR Part 2, the Contractor shall--

(1) For competitive subcontracts expected to exceed $100,000 (including all options), include a solicitation provision substantially the same as the provision at FAR 52.223-13, Certification of Toxic Chemical Release Reporting; and

(2) Include in any resultant subcontract exceeding $100,000 (including all options), the substance of this clause, except this paragraph (e).

(End of clause)

52.225-13 RESTRICTIONS ON CERTAIN FOREIGN PURCHASES (MAR 2005)

(a) Except as authorized by the Office of Foreign Assets Control (OFAC) in the Department of the Treasury, the Contractor shall not acquire, for use in the performance of this contract, any supplies or services if any proclamation, Executive order, or statute administered by OFAC, or if OFAC's implementing regulations at 31 CFR chapter V, would prohibit such a transaction by a person subject to the jurisdiction of the United States.

(b) Except as authorized by OFAC, most transactions involving Cuba, Iran, Libya, and Sudan are prohibited, as are most imports from North Korea, into the United States or its outlying areas. Lists of entities and individuals subject to economic sanctions are included in OFAC's List of Specially Designated Nationals and Blocked Persons at TerList1.html. More information about these restrictions, as well as updates, is available in the OFAC's regulations at 31 CFR chapter V and/or on OFAC's Web site at http://epls.arnet.gov/News.html.

(c) The Contractor shall insert this clause, including this paragraph (c), in all subcontracts.

(End of clause)

52.225-14 INCONSISTENCY BETWEEN ENGLISH VERSION AND TRANSLATION OF CONTRACT (FEB 2000)

In the event of inconsistency between any terms of this contract and any translation into another language, the English language meaning shall control.

(End of clause)

52.226-1 UTILIZATION OF INDIAN ORGANIZATIONS AND INDIAN-OWNED ECONOMIC ENTERPRISES (JUN 2000)

(a) Definitions. As used in this clause:

"Indian" means any person who is a member of any Indian tribe, band, group, pueblo or community that is recognized by the Federal Government as eligible for services from the Bureau of Indian Affairs (BIA) in accordance with 25 U.S.C. 1452(c) and any ``Native" as defined in the Alaska Native Claims Settlement Act (43 U.S.C. 1601).

"Indian organization" means the governing body of any Indian tribe or entity established or recognized by the governing body of an Indian tribe for the purposes of 25 U.S.C., chapter 17.

"Indian-owned economic enterprise" means any Indian-owned (as determined by the Secretary of the Interior) commercial, industrial, or business activity established or organized for the purpose of profit, provided that Indian ownership constitutea not less than 51 percent of the enterprise.

"Indian tribe" means any Indian tribe, band, group, pueblo or community, including native villages and

native groups (including corporations organized by Kenai, Juneau, Sitka, and Kodiak) as defined in the Alaska Native Claims Settlement Act, that is recognized by the Federal Government as eligible for services from BIA in accordance with 25 U.S.C. 1542(c).

"Interested party" means a prime contractor or an actual or prospective offeror whose direct economic interest would be affected by the award of a subcontract or by the failure to award a subcontract.

(b) The Contractor shall use its best efforts to give Indian organizations and Indian-owned economic enterprises (25 U.S.C. 1544) the maximum practicable opportunity to participate in the subcontracts it awards to the fullest extent consistent with efficient performance of its contract.

(1) The Contracting Officer and the Contractor, acting in good faith, may rely on the representation of an Indian organization or Indian-owned economic enterprise as to its eligibility, unless an interested party challenges its status or the Contracting Officer has independent reason to question that status. In the event of a challenge to the representation of a subcontractor, the Contracting Officer will refer the matter to the U.S. Department of the Interior, Bureau of Indian Affairs (BIA), Attn: Chief, Division of Contracting and Grants Administration, 1849 C Street, NW., MS 2626-MIB, Washington, DC 20240-4000.

The BIA will determine the eligibility and notify the Contracting Officer. No incentive payment will be made within 50 working days of subcontract award or while a challenge is pending. If a subcontractor is determined to be an ineligible participant, no incentive payment will be made under the Indian Incentive Program.

(2) The Contractor may request an adjustment under the Indian Incentive Program to the following:

(i) The estimated cost of a cost-type contract.

(ii) The target cost of a cost-plus-incentive-fee prime contract.

(iii) The target cost and ceiling price of a fixed-price incentive prime contract.

(iv) The price of a firm-fixed-price prime contract.

(3) The amount of the adjustment to the prime contract is 5 percent of the estimated cost, target cost, or firm-fixed-price included in the subcontract initially awarded to the Indian organization or Indian-owned economic enterprise.

(4) The Contractor has the burden of proving the amount claimed and must assert its request for an adjustment prior to completion of contract performance.

(c) The Contracting Officer, subject to the terms and conditions of the contract and the availability of funds, will authorize an incentive payment of 5 percent of the amount paid to the subcontractor. The Contracting Officer will seek funding in accordance with agency procedures.

(End of clause)

52.227-1 Authorization and Consent (JUL 1995)

(a) The Government authorizes and consents to all use and manufacture, in performing this contract or any subcontract at any tier, of any invention described in and covered by a United States patent (1) embodied in the structure or composition of any article the delivery of which is accepted by the Government under this contract or (2) used in machinery, tools, or methods whose use necessarily results from compliance by the Contractor or a subcontractor with (i) specifications or written provisions forming a part of this contract or (ii) specific written instructions given by the Contracting Officer directing the manner of performance. The entire liability to the Government for infringement of a patent of the United States shall be determined solely by the provisions of the indemnity clause, if any, included in this contract or any subcontract

hereunder (including any lower-tier subcontract), and the Government assumes liability for all other infringement to the extent of the authorization and consent hereinabove granted.

(b) The Contractor agrees to include, and require inclusion of, this clause, suitably modified to identify the parties, in all subcontracts at any tier for supplies or services (including construction, architect-engineer services, and materials, supplies, models, samples, and design or testing services expected to exceed the simplified acquisition threshold (however, omission of this clause from any subcontract, including those at or below the simplified acquisition threshold, does not affect this authorization and consent.)

(End of clause)

52.227-2 NOTICE AND ASSISTANCE REGARDING PATENT AND COPYRIGHT INFRINGEMENT (AUG 1996)

(a) The Contractor shall report to the Contracting Officer, promptly and in reasonable written detail, each notice or claim of patent or copyright infringement based on the performance of this contract of which the Contractor has knowledge.

(b) In the event of any claim or suit against the Government on account of any alleged patent or copyright infringement arising out of the performance of this contract or out of the use of any supplies furnished or work or services performed under this contract, the Contractor shall furnish to the Government, when requested by the Contracting Officer, all evidence and information in possession of the Contractor pertaining to such suit or claim. Such evidence and information shall be furnished at the expense of the Government except where the Contractor has agreed to indemnify the Government.

(e) The Contractor agrees to include, and require inclusion of, this clause in all subcontracts at any tier for supplies or services (including construction and architect-engineer subcontracts and those for material, supplies, models, samples, or design or testing services) expected to exceed the simplified acquisition threshold at (FAR) 2.101.to exceed the dollar amount set forth in 13.000 of the Federal Acquisition Regulation (FAR).

(End of clause)

52.227-4 PATENT INDEMNITY--CONSTRUCTION CONTRACTS (APR 1984)

Except as otherwise provided, the Contractor agrees to indemnify the Government and its officers, agents, and employees against liability, including costs and expenses, for infringement upon any United States patent (except a patent issued upon an application that is now or may hereafter be withheld from issue pursuant to a Secrecy Order under 35 U.S.C. 181) arising out of performing this contract or out of the use or disposal by or for the account of the Government of supplies furnished or work performed under this contract.

(End of clause)

52.228-2 ADDITIONAL BOND SECURITY (OCT 1997)

The Contractor shall promptly furnish additional security required to protect the Government and persons supplying labor or materials under this contract if--

(a) Any surety upon any bond, or issuing financial institution for other security, furnished with this contract becomes unacceptable to the Government.

(b) Any surety fails to furnish reports on its financial condition as required by the Government;

(c) The contract price is increased so that the penal sum of any bond becomes inadequate in the opinion of the Contracting Officer; or

(d) An irrevocable letter of credit (ILC) used as security will expire before the end of the period of required security. If the Contractor does not furnish an acceptable extension or replacement ILC, or other acceptable substitute, at least 30 days before an ILC's scheduled expiration, the Contracting officer has the right to immediately draw on the ILC.

(End of clause)

52.228-11 PLEDGES OF ASSETS (FEB 1992)

(a) Offerors shall obtain from each person acting as an individual surety on a bid guarantee, a performance bond, or a payment bond--

(1) Pledge of assets; and

(2) Standard Form 28, Affidavit of Individual Surety.

(b) Pledges of assets from each person acting as an individual surety shall be in the form of--

(1) Evidence of an escrow account containing cash, certificates of deposit, commercial or Government securities, or other assets described in FAR 28.203-2 (except see 28.203-2(b)(2) with respect to Government securities held in book entry form) and/or;

(2) A recorded lien on real estate. The offeror will be required to provide--

(i) Evidence of title in the form of a certificate of title prepared by a title insurance company approved by the United States Department of Justice. This title evidence must show fee simple title vested in the surety along with any concurrent owners; whether any real estate taxes are due and payable; and any recorded encumbrances against the property, including the lien filed in favor of the Government as required by FAR 28.203-3(d);

(ii) Evidence of the amount due under any encumbrance shown in the evidence of title;

(iii) A copy of the current real estate tax assessment of the property or a current appraisal dated no earlier than 6 months prior to the date of the bond, prepared by a professional appraiser who certifies that the appraisal has been conducted in accordance with the generally accepted appraisal standards as reflected in the Uniform Standards of Professional Appraisal Practice, as promulgated by the Appraisal Foundation.

(End of clause)

52.229-3 FEDERAL, STATE, AND LOCAL TAXES (APR 2003)

(a) As used in this clause--

"Contract date" means the date set for bid opening or, if this is a negotiated contract or a modification, the effective date of this contract or modification.

"All applicable Federal, State, and local taxes and duties" means all taxes and duties, in effect on the contract date, that the taxing authority is imposing and collecting on the transactions or property covered by this contract.

"After-imposed Federal tax" means any new or increased Federal excise tax or duty, or tax that was exempted or excluded on the contract date but whose exemption was later revoked or reduced during the contract period, on the transactions or property covered by this contract that the Contractor is required to pay or bear as the result of legislative, judicial, or administrative action taking effect after the contract date. It does not include social security tax or other employment taxes.

"After-relieved Federal tax" means any amount of Federal excise tax or duty, except social security or other employment taxes, that would otherwise have been payable on the transactions or property covered by this contract, but which the Contractor is not required to pay or bear, or for which the Contractor obtains a refund or drawback, as the result of legislative, judicial, or administrative action taking effect after the contract date.

Local taxes includes taxes imposed by a possession or territory of the United States, Puerto Rico, or the Northern Mariana Islands, if the contract is performed wholly or partly in any of those areas.

(b) The contract price includes all applicable Federal, State, and local taxes and duties.

(c) The contract price shall be increased by the amount of any after-imposed Federal tax, provided the Contractor warrants in writing that no amount for such newly imposed Federal excise tax or duty or rate increase was included in the contract price, as a contingency reserve or otherwise.

(d) The contract price shall be decreased by the amount of any after-relieved Federal tax.

(e) The contract price shall be decreased by the amount of any Federal excise tax or duty, except social security or other employment taxes, that the Contractor is required to pay or bear, or does not obtain a refund of, through the Contractor's fault, negligence, or failure to follow instructions of the Contracting Officer.

(f) No adjustment shall be made in the contract price under this clause unless the amount of the adjustment exceeds $250.

(g) The Contractor shall promptly notify the Contracting Officer of all matters relating to any Federal excise tax or duty that reasonably may be expected to result in either an increase or decrease in the contract price and shall take appropriate action as the Contracting Officer directs.

(h) The Government shall, without liability, furnish evidence appropriate to establish exemption from any Federal, State, or local tax when the Contractor requests such evidence and a reasonable basis exists to sustain the exemption.

(End of clause)

52.232-5 PAYMENTS UNDER FIXED-PRICE CONSTRUCTION CONTRACTS (SEP 2002)

(a) Payment of price. The Government shall pay the Contractor the contract price as provided in this contract.

(b) Progress payments. The Government shall make progress payments monthly as the work proceeds, or at more frequent intervals as determined by the Contracting Officer, on estimates of work accomplished which meets the standards of quality established under the contract, as approved by the Contracting Officer.

(1) The Contractor's request for progress payments shall include the following substantiation:

(i) An itemization of the amounts requested, related to the various elements of work required by the contract covered by the payment requested.

(ii) A listing of the amount included for work performed by each subcontractor under the contract.

(iii) A listing of the total amount of each subcontract under the contract.

(iv) A listing of the amounts previously paid to each such subcontractor under the contract.

(v) Additional supporting data in a form and detail required by the Contracting Officer.

(2) In the preparation of estimates, the Contracting Officer may authorize material delivered on the site and preparatory work done to be taken into consideration. Material delivered to the Contractor at locations other than the site also may be taken into consideration if--

(i) Consideration is specifically authorized by this contract; and

(ii) The Contractor furnishes satisfactory evidence that it has acquired title to such material and that the material will be used to perform this contract.

(c) Contractor certification. Along with each request for progress payments, the Contractor shall furnish the following certification, or payment shall not be made: (However, if the Contractor elects to delete paragraph (c)(4) from the certification, the certification is still acceptable.)

I hereby certify, to the best of my knowledge and belief, that--

(1) The amounts requested are only for performance in accordance with the specifications, terms, and conditions of the contract;

(2) All payments due to subcontractors and suppliers from previous payments received under the contract have been made, and timely payments will be made from the proceeds of the payment covered by this certification, in accordance with subcontract agreements and the requirements of chapter 39 of Title 31, United States Code;

(3) This request for progress payments does not include any amounts which the prime contractor intends to withhold or retain from a subcontractor or supplier in accordance with the terms and conditions of the subcontract; and

(4) This certification is not to be construed as final acceptance of a subcontractor's performance.

_____

(Name)

_____

(Title)

_____

(Date)

(d) Refund of unearned amounts. If the Contractor, after making a certified request for progress payments, discovers that a portion or all of such request constitutes a payment for performance by the Contractor that fails to conform to the specifications, terms, and conditions of this contract (hereinafter referred to as the "unearned amount"), the Contractor shall--

(1) Notify the Contracting Officer of such performance deficiency; and

(2) Be obligated to pay the Government an amount (computed by the Contracting Officer in the manner provided in paragraph (j) of this clause) equal to interest on the unearned amount from the 8th day after the date of receipt of the unearned amount until--

(i) The date the Contractor notifies the Contracting Officer that the performance deficiency has been corrected; or

(ii) The date the Contractor reduces the amount of any subsequent certified request for progress payments by an amount equal to the unearned amount.

(e) Retainage. If the Contracting Officer finds that satisfactory progress was achieved during any period for which a progress payment is to be made, the Contracting Officer shall authorize payment to be made in full. However, if satisfactory progress has not been made, the Contracting Officer may retain a maximum of 10 percent of the amount of the payment until satisfactory progress is achieved. When the work is substantially complete, the Contracting Officer may retain from previously withheld funds and future progress payments that amount the Contracting Officer considers adequate for protection of the Government and shall release to the Contractor all the remaining withheld funds. Also, on completion and acceptance of each separate building, public work, or other division of the contract, for which the price is stated separately in the contract, payment shall be made for the completed work without retention of a percentage.

(f) Title, liability, and reservation of rights. All material and work covered by progress payments made shall, at the time of payment, become the sole property of the Government, but this shall not be construed as--

(1) Relieving the Contractor from the sole responsibility for all material and work upon which payments have been made or the restoration of any damaged work; or

(2) Waiving the right of the Government to require the fulfillment of all of the terms of the contract.

(g) Reimbursement for bond premiums. In making these progress payments, the Government shall, upon request, reimburse the Contractor for the amount of premiums paid for performance and payment bonds (including coinsurance and reinsurance agreements, when applicable) after the Contractor has furnished evidence of full payment to the surety. The retainage provisions in paragraph (e) of this clause shall not apply to that portion of progress payments attributable to bond premiums.

(h) Final payment. The Government shall pay the amount due the Contractor under this contract after--

(1) Completion and acceptance of all work;

(2) Presentation of a properly executed voucher; and

(3) Presentation of release of all claims against
the Government arising by virtue of this contract, other than claims, in stated amounts, that the Contractor has specifically excepted from the operation of the release. A release may also be required of the assignee if the Contractor's claim to amounts payable under this contract has been assigned under the Assignment of Claims Act of 1940 (31 U.S.C. 3727 and 41 U.S.C. 15).

(i) Limitation because of undefinitized work. Notwithstanding any provision of this contract, progress payments shall not exceed 80 percent on work accomplished on undefinitized contract actions. A "contract action" is any action resulting in a contract, as defined in FAR Subpart 2.1, including contract modifications for additional supplies or services, but not including contract modifications that are within the scope and under the terms of the contract, such as contract modifications issued pursuant to the Changes clause, or funding and other administrative changes.

(j) Interest computation on unearned amounts. In accordance with 31 U.S.C. 3903(c)(1), the amount payable under subparagraph (d)(2) of this clause shall be--

(1) Computed at the rate of average bond equivalent rates of 91-day Treasury bills auctioned at the most recent auction of such bills prior to the date the Contractor receives the unearned amount; and

(2) Deducted from the next available payment to the Contractor.

52.232-17 INTEREST (JUNE 1996)

(a) Except as otherwise provided in this contract under a Price Reduction for Defective Cost or Pricing Data clause or a Cost Accounting Standards clause, all amounts that become payable by the Contractor to the Government under this contract (net of any applicable tax credit under the Internal Revenue Code (26 U.S.C. 1481)) shall bear simple interest from the date due until paid unless paid within 30 days of becoming due. The interest rate shall be the interest rate established by the Secretary of the Treasury as provided in Section 12 of the Contract Disputes Act of 1978 (Public Law 95-563), which is applicable to the period in which the amount becomes due, as provided in paragraph (b) of this clause, and then at the rate applicable for each six-month period as fixed by the Secretary until the amount is paid. reproduce, prepare derivative works, distribute copies to the public, and (b) Amounts shall be due at the earliest of the following dates:

(1) The date fixed under this contract.

(2) The date of the first written demand for payment consistent with this contract, including any demand resulting from a default termination.

(3) The date the Government transmits to the Contractor a proposed supplemental agreement to confirm completed negotiations establishing the amount of debt.

(4) If this contract provides for revision of prices, the date of written notice to the Contractor stating the amount of refund payable in connection with a pricing proposal or a negotiated pricing agreement not confirmed by contract modification.

(c) The interest charge made under this clause may be reduced under the procedures prescribed in 32.614-2 of the Federal Acquisition Regulation in effect on the date of this contract.

(End of clause)

52.232-23 ASSIGNMENT OF CLAIMS (JAN 1986)

(a) The Contractor, under the Assignment of Claims Act, as amended, 31 U.S.C. 3727, 41 U.S.C. 15 (hereafter referred to as "the Act"), may assign its rights to be paid amounts due or to become due as a result of the performance of this contract to a bank, trust company, or other financing institution, including any Federal lending agency. The assignee under such an assignment may thereafter further assign or reassign its right under the original assignment to any type of financing institution described in the preceding sentence.

(b) Any assignment or reassignment authorized under the Act and this clause shall cover all unpaid amounts payable under this contract, and shall not be made to more than one party, except that an assignment or reassignment may be made to one party as agent or trustee for two or more parties participating in the financing of this contract.

(c) The Contractor shall not furnish or disclose to any assignee under this contract any classified document (including this contract) or information related to work under this contract until the Contracting Officer authorizes such action in writing.

(End of clause)

52.232-27 PROMPT PAYMENT FOR CONSTRUCTION CONTRACTS (OCT 2003)

Notwithstanding any other payment terms in this contract, the Government will make invoice payments under the terms and conditions specified in this clause. The Government considers payment as being made on the day a check is dated or the date of an electronic funds transfer. Definitions of pertinent terms are set

forth in sections 2.101, 32.001, and 32.902 of the Federal Acquisition Regulation. All days referred to in this clause are calendar days, unless otherwise specified. (However, see paragraph (a)(3) concerning payments due on Saturdays, Sundays, and legal holidays.)

(a) Invoice payments--(1) Types of invoice payments. For purposes of this clause, there are several types of invoice payments that may occur under this contract, as follows:

(i) Progress payments, if provided for elsewhere in this contract, based on Contracting Officer approval of the estimated amount and value of work or services performed, including payments for reaching milestones in any project.

(A) The due date for making such payments is 14 days after the designated billing office receives a proper payment request. If the designated billing office fails to annotate the payment request with the actual date of receipt at the time of receipt, the payment due date is the 14th day after the date of the Contractor's payment request, provided the designated billing office receives a proper payment request and there is no disagreement over quantity, quality, or Contractor compliance with contract requirements.

(B) The due date for payment of any amounts retained by the Contracting Officer in accordance with the clause at 52.232-5, Payments Under Fixed-Price Construction Contracts, is as specified in the contract or, if not specified, 30 days after approval by the Contracting Officer for release to the Contractor.

(ii) Final payments based on completion and acceptance of all work and presentation of release of all claims against the Government arising by virtue of the contract, and payments for partial deliveries that have been accepted by the Government (e.g., each separate building, public work, or other division of the contract for which the price is stated separately in the contract).

(A) The due date for making such payments is the later of the following two events:

(1) The 30th day after the designated billing office receives a proper invoice from the Contractor.

(2) The 30th day after Government acceptance of the work or services completed by the Contractor. For a final invoice when the payment amount is subject to contract settlement actions (e.g., release of claims), acceptance is deemed to occur on the effective date of the contract settlement.

(B) If the designated billing office fails to annotate the invoice with the date of actual receipt at the time of receipt, the invoice payment due date is the 30th day after the date of the Contractor's invoice, provided the designated billing office receives a proper invoice and there is no disagreement over quantity, quality, or Contractor compliance with contract requirements.

(2) Contractor's invoice. The Contractor shall prepare and submit invoices to the designated billing office specified in the contract. A proper invoice must include the items listed in paragraphs (a)(2)(i) through (a)(2)(xi) of this clause. If the invoice does not comply with these requirements, the designated billing office must return it within 7 days after receipt, with the reasons why it is not a proper invoice. When computing any interest penalty owed the Contractor, the Government will take into account if the Government notifies the Contractor of an improper invoice in an untimely manner.

(i) Name and address of the Contractor.

(ii) Invoice date and invoice number. (The Contractor should date invoices as close as possible to the date of mailing or transmission.)

(iii) Contract number or other authorization for work or services performed (including order number and contract line item number).

(iv) Description of work or services performed.

(v) Delivery and payment terms (e.g., discount for prompt payment terms).

(vi) Name and address of Contractor official to whom payment is to be sent (must be the same as that in the contract or in a proper notice of assignment).

(vii) Name (where practicable), title, phone number, and mailing address of person to notify in the event of a defective invoice.

(viii) For payments described in paragraph (a)(1)(i) of this clause, substantiation of the amounts requested and certification in accordance with the requirements of the clause at 52.232-5, Payments Under Fixed-Price Construction Contracts.

(ix) Taxpayer Identification Number (TIN). The Contractor shall include its TIN on the invoice only if required elsewhere in this contract.

(x) Electronic funds transfer (EFT) banking information.

(A) The Contractor shall include EFT banking information on the invoice only if required elsewhere in this contract.

(B) If EFT banking information is not required to be on the invoice, in order for the invoice to be a proper invoice, the Contractor shall have submitted correct EFT banking information in accordance with the applicable solicitation provision (e.g., 52.232-38, Submission of Electronic Funds Transfer Information with Offer), contract clause (e.g., 52.232-33, Payment by Electronic Funds Transfer--Central Contractor Registration, or 52.232-34, Payment by Electronic Funds Transfer--Other Than Central Contractor Registration), or applicable agency procedures.

(C) EFT banking information is not required if the Government waived the requirement to pay by EFT.

(xi) Any other information or documentation required by the contract.

(3) Interest penalty. The designated payment office will pay an interest penalty automatically, without request from the Contractor, if payment is not made by the due date and the conditions listed in paragraphs (a)(3)(i) through (a)(3)(iii) of this clause are met, if applicable. However, when the due date falls on a Saturday, Sunday, or legal holiday, the designated payment office may make payment on the following working day without incurring a late payment interest penalty.

(i) The designated billing office received a proper invoice.

(ii) The Government processed a receiving report or other Government documentation authorizing payment and there was no disagreement over quantity, quality, Contractor compliance with any contract term or condition, or requested progress payment amount.

(iii) In the case of a final invoice for any balance of funds due the Contractor for work or services performed, the amount was not subject to further contract settlement actions between the Government and the Contractor.

(4) Computing penalty amount. The Government will compute the interest penalty in accordance with the Office of Management and Budget prompt payment regulations at 5 CFR part 1315.

(i) For the sole purpose of computing an interest penalty that might be due the Contractor for payments described in paragraph (a)(1)(ii) of this clause, Government acceptance or approval is deemed to occur constructively on the 7th day after the Contractor has completed the work or services in accordance with the terms and conditions of the contract. If actual acceptance or approval occurs within the constructive acceptance or approval period, the Government will base the determination of an interest penalty on the actual date of acceptance or approval. Constructive acceptance or constructive approval requirements do

not apply if there is a disagreement over quantity, quality, or Contractor compliance with a contract provision. These requirements also do not compel Government officials to accept work or services, approve Contractor estimates, perform contract administration functions, or make payment prior to fulfilling their responsibilities.

(ii) The prompt payment regulations at 5 CFR 1315.10(c) do not require the Government to pay interest penalties if payment delays are due to disagreement between the Government and the Contractor over the payment amount or other issues involving contract compliance, or on amounts temporarily withheld or retained in accordance with the terms of the contract. The Government and the Contractor shall resolve claims involving disputes, and any interest that may be payable in accordance with the clause at FAR 52.233-1, Disputes.

(5) Discounts for prompt payment. The designated payment office will pay an interest penalty automatically, without request from the Contractor, if the Government takes a discount for prompt payment improperly. The Government will calculate the interest penalty in accordance with the prompt payment regulations at 5 CFR part 1315.

(6) Additional interest penalty. (i) The designated payment office will pay a penalty amount, calculated in accordance with the prompt payment regulations at 5 CFR part 1315 in addition to the interest penalty amount only if--

(A) The Government owes an interest penalty of $1 or more;

(B) The designated payment office does not pay the interest penalty within 10 days after the date the invoice amount is paid; and

(C) The Contractor makes a written demand to the designated payment office for additional penalty payment, in accordance with paragraph (a)(6)(ii) of this clause, postmarked not later than 40 days after the date the invoice amount is paid.

(ii)(A) The Contractor shall support written demands for additional penalty payments with the following data. The Government will not request any additional data. The Contractor shall--

(1) Specifically assert that late payment interest is due under a specific invoice, and request payment of all overdue late payment interest penalty and such additional penalty as may be required;

(2) Attach a copy of the invoice on which the unpaid late payment interest was due; and

(3) State that payment of the principal has been received, including the date of receipt.

(B) If there is no postmark or the postmark is illegible--

(1) The designated payment office that receives the demand will annotate it with the date of receipt provided the demand is received on or before the 40th day after payment was made; or

(2) If the designated payment office fails to make the required annotation, the Government will determine the demand's validity based on the date the Contractor has placed on the demand, provided such date is no later than the 40th day after payment was made.

(b) Contract financing payments. If this contract provides for contract financing, the Government will make contract financing payments in accordance with the applicable contract financing clause.

(c) Subcontract clause requirements. The Contractor shall include in each subcontract for property or services (including a material supplier) for the purpose of performing this contract the following:

(1) Prompt payment for subcontractors. A payment clause that obligates the Contractor to pay the subcontractor for satisfactory performance under its subcontract not later than 7 days from receipt of payment out of such amounts as are paid to the Contractor under this contract.

(2) Interest for subcontractors. An interest penalty clause that obligates the Contractor to pay to the subcontractor an interest penalty for each payment not made in accordance with the payment clause--

(i) For the period beginning on the day after the required payment date and ending on the date on which payment of the amount due is made; and

(ii) Computed at the rate of interest established by the Secretary of the Treasury, and published in the Federal Register, for interest payments under section 12 of the Contract Disputes Act of 1978 (41 U.S.C. 611) in effect at the time the Contractor accrues the obligation to pay an interest penalty.

(3) Subcontractor clause flowdown. A clause requiring each subcontractor to use:

(i) Include a payment clause and an interest penalty clause conforming to the standards set forth in paragraphs (c)(1) and (c)(2) of this clause in each of its subcontracts; and

(ii) Require each of its subcontractors to include such clauses in their subcontracts with each lower-tier subcontractor or supplier.

(d) Subcontract clause interpretation. The clauses required by paragraph (c) of this clause shall not be construed to impair the right of the Contractor or a subcontractor at any tier to negotiate, and to include in their subcontract, provisions that--

(1) Retainage permitted. Permit the Contractor or a subcontractor to retain (without cause) a specified percentage of each progress payment otherwise due to a subcontractor for satisfactory performance under the subcontract without incurring any obligation to pay a late payment interest penalty, in accordance with terms and conditions agreed to by the parties to the subcontract, giving such recognition as the parties deem appropriate to the ability of a subcontractor to furnish a performance bond and a payment bond;

(2) Withholding permitted. Permit the Contractor or subcontractor to make a determination that part or all of the subcontractor's request for payment may be withheld in accordance with the subcontract agreement; and

(3) Withholding requirements. Permit such withholding without incurring any obligation to pay a late payment penalty if--

(i) A notice conforming to the standards of paragraph (g) of this clause previously has been furnished to the subcontractor; and

(ii) The Contractor furnishes to the Contracting Officer a copy of any notice issued by a Contractor pursuant to paragraph (d)(3)(i) of this clause.

(e) Subcontractor withholding procedures. If a Contractor, after making a request for payment to the Government but before making a payment to a subcontractor for the subcontractor's performance covered by the payment request, discovers that all or a portion of the payment otherwise due such subcontractor is subject to withholding from the subcontractor in accordance with the subcontract agreement, then the Contractor shall--

(1) Subcontractor notice. Furnish to the subcontractor a notice conforming to the standards of paragraph (g) of this clause as soon as practicable upon ascertaining the cause giving rise to a withholding, but prior to the due date for subcontractor payment;

(2) Contracting Officer notice. Furnish to the Contracting Officer, as soon as practicable, a copy of the notice furnished to the subcontractor pursuant to paragraph (e)(1) of this clause;

(3) Subcontractor progress payment reduction. Reduce the subcontractor's progress payment by an amount not to exceed the amount specified in the notice of withholding furnished under paragraph (e)(1) of this clause;

(4) Subsequent subcontractor payment. Pay the subcontractor as soon as practicable after the correction of the identified subcontract performance deficiency, and--

(i) Make such payment within--

(A) Seven days after correction of the identified subcontract performance deficiency (unless the funds therefor must be recovered from the Government because of a reduction under paragraph (e)(5)(i)) of this clause; or

(B) Seven days after the Contractor recovers such funds from the Government; or

(ii) Incur an obligation to pay a late payment interest penalty computed at the rate of interest established by the Secretary of the Treasury, and published in the Federal Register, for interest payments under section 12 of the Contracts Disputes Act of 1978 (41 U.S.C. 611) in effect at the time the Contractor accrues the obligation to pay an interest penalty;

(5) Notice to Contracting Officer. Notify the Contracting Officer upon--

(i) Reduction of the amount of any subsequent certified application for payment; or

(ii) Payment to the subcontractor of any withheld amounts of a progress payment, specifying--

(A) The amounts withheld under paragraph (e)(1) of this clause; and

(B) The dates that such withholding began and ended; and

(6) Interest to Government. Be obligated to pay to the Government an amount equal to interest on the withheld payments (computed in the manner provided in 31 U.S.C. 3903(c)(1)), from the 8th day after receipt of the withheld amounts from the Government until--

(i) The day the identified subcontractor performance deficiency is corrected; or

(ii) The date that any subsequent payment is reduced under paragraph (e)(5)(i) of this clause.

(f) Third-party deficiency reports--(1) Withholding from subcontractor. If a Contractor, after making payment to a first-tier subcontractor, receives from a supplier or subcontractor of the first-tier subcontractor (hereafter referred to as a “second-tier subcontractor”) a written notice in accordance with section 2 of the Act of August 24, 1935 (40 U.S.C. 270b, Miller Act), asserting a deficiency in such first-tier subcontractor's performance under the contract for which the Contractor may be ultimately liable, and the Contractor determines that all or a portion of future payments otherwise due such first-tier subcontractor is subject to withholding in accordance with the subcontract agreement, the Contractor may, without incurring an obligation to pay an interest penalty under paragraph (e)(6) of this clause--

(i) Furnish to the first-tier subcontractor a notice conforming to the standards of paragraph (g) of this clause as soon as practicable upon making such determination; and

(ii) Withhold from the first-tier subcontractor's next available progress payment or payments an amount not to exceed the amount specified in the notice of withholding furnished under paragraph (f)(1)(i) of this clause.

(2) Subsequent payment or interest charge. As soon as practicable, but not later than 7 days after receipt of satisfactory written notification that the identified subcontract performance deficiency has been corrected, the Contractor shall--

(i) Pay the amount withheld under paragraph (f)(1)(ii) of this clause to such first-tier subcontractor; or

(ii) Incur an obligation to pay a late payment interest penalty to such first-tier subcontractor computed at the rate of interest established by the Secretary of the Treasury, and published in the Federal Register, for interest payments under section 12 of the Contracts DisputesAct of 1978 (41 U.S.C. 611) in effect at the time the Contractor accrues the obligation to pay an interest penalty.

(g) Written notice of subcontractor withholding. The Contractor shall issue a written notice of any withholding to a subcontractor (with a copy furnished to the Contracting Officer), specifying--

(1) The amount to be withheld;

(2) The specific causes for the withholding under the terms of the subcontract; and

(3) The remedial actions to be taken by the subcontractor in order to receive payment of the amounts withheld.

(h) Subcontractor payment entitlement. The Contractor may not request payment from the Government of any amount withheld or retained in accordance with paragraph (d) of this clause until such time as the Contractor has determined and certified to the Contracting Officer that the subcontractor is entitled to the payment of such amount.

(i) Prime-subcontractor disputes. A dispute between the Contractor and subcontractor relating to the amount or entitlement of a subcontractor to a payment or a late payment interest penalty under a clause included in the subcontract pursuant to paragraph (c) of this clause does not constitute a dispute to which the Government is a party. The Government may not be interpleaded in any judicial or administrative proceeding involving such a dispute.

(j) Preservation of prime-subcontractor rights. Except as provided in paragraph (i) of this clause, this clause shall not limit or impair any contractual, administrative, or judicial remedies otherwise available to the Contractor or a subcontractor in the event of a dispute involving late payment or nonpayment by the Contractor or deficient subcontract performance or nonperformance by a subcontractor.

(k) Non-recourse for prime contractor interest penalty. The Contractor's obligation to pay an interest penalty to a subcontractor pursuant to the clauses included in a subcontract under paragraph (c) of this clause shall not be construed to be an obligation of the Government for such interest penalty. A cost-reimbursement claim may not include any amount for reimbursement of such interest penalty.

(l) Overpayments. If the Contractor becomes aware of a duplicate contract financing or invoice payment or that the Government has otherwise overpaid on a contract financing or invoice payment, the Contractor shall immediately notify the Contracting Officer and request instructions for disposition of the overpayment.

(End of clause)

52.233-1 Disputes. (JUL 2002)

(a) This contract is subject to the Contract Disputes Act of 1978, as amended (41 U.S.C. 601-613).

(b) Except as provided in the Act, all disputes arising under or relating to this contract shall be resolved under this clause.

(c) Claim, as used in this clause, means a written demand or written assertion by one of the contracting parties seeking, as a matter of right, the payment of money in a sum certain, the adjustment or interpretation of contract terms, or other relief arising under or relating to this contract. However, a written demand or written assertion by the Contractor seeking the payment of money exceeding $100,000 is not a claim under the Act until certified. A voucher, invoice, or other routine request for payment that is not in dispute when submitted is not a claim under the Act. The submission may be converted to a claim under the Act, by complying with the submission and certification requirements of this clause, if it is disputed either as to liability or amount or is not acted upon in a reasonable time.

(d)(1) A claim by the Contractor shall be made in writing and, unless otherwise stated in this contract, submitted within 6 years after accrual of the claim to the Contracting Officer for a written decision. A claim by the Government against the Contractor shall be subject to a written decision by the Contracting Officer.

(2)(i) The contractors shall provide the certification specified in subparagraph (d)(2)(iii) of this clause when submitting any claim -

(A) Exceeding $100,000; or

(B) Regardless of the amount claimed, when using -

(1) Arbitration conducted pursuant to 5 U.S.C. 575-580; or

(2) Any other alternative means of dispute resolution (ADR) technique that the agency elects to handle in accordance with the Administrative Dispute Resolution Act (ADRA).

(ii) The certification requirement does not apply to issues in controversy that have not been submitted as all or part of a claim.

(iii) The certification shall state as follows: "I certify that the claim is made in good faith; that the supporting data are accurate and complete to the best of my knowledge and belief; that the amount requested accurately reflects the contract adjustment for which the Contractor believes the Government is liable; and that I am duly authorized to certify the claim on behalf of the Contractor.

(3) The certification may be executed by any person duly authorized to bind the Contractor with respect to the claim.

(e) For Contractor claims of $100,000 or less, the Contracting Officer must, if requested in writing by the Contractor, render a decision within 60 days of the request. For Contractor-certified claims over $100,000, the Contracting Officer must, within 60 days, decide the claim or notify the Contractor of the date by which the decision will be made.

(f) The Contracting Officer's decision shall be final unless the Contractor appeals or files a suit as provided in the Act.

(g) If the claim by the Contractor is submitted to the Contracting Officer or a claim by the Government is presented to the Contractor, the parties, by mutual consent, may agree to use alternative disput resolution (ADR). If the Contractor refuses an offer for ADR, the Contractor shall inform the Contracting Officer, in writing, of the Contractor's specific reasons for rejecting the request.

(h) The Government shall pay interest on the amount found due and unpaid from (1) the date the Contracting Officer receives the claim (certified, if required); or (2) the date that payment otherwise would be due, if that date is later, until the date of payment. With regard to claims having defective certifications, as defined in (FAR) 48 CFR 33.201, interest shall be paid from the date that the Contracting Officer initially receives the claim. Simple interest on claims shall be paid at the rate, fixed by the Secretary of the Treasury as provided in the Act, which is applicable to the period during which the Contracting Officer

receives the claim and then at the rate applicable for each 6-month period as fixed by the Treasury Secretary during the pendency of the claim.

(i) The Contractor shall proceed diligently with performance of this contract, pending final resolution of any request for relief, claim, appeal, or action arising under the contract, and comply with any decision of the Contracting Officer.

(End of clause)

52.233-3 PROTEST AFTER AWARD (AUG. 1996)

(a) Upon receipt of a notice of protest (as defined in FAR 33.101) or a determination that a protest is likely (see FAR 33.102(d)), the Contracting Officer may, by written order to the Contractor, direct the Contractor to stop performance of the work called for by this contract. The order shall be specifically identified as a stop-work order issued under this clause. Upon receipt of the order, the Contractor shall immediately comply with its terms and take all reasonable steps to minimize the incurrence of costs allocable to the work covered by the order during the period of work stoppage. Upon receipt of the final decision in the protest, the Contracting Officer shall either--

(1) Cancel the stop-work order; or

(2) Terminate the work covered by the order as provided in the Default, or the Termination for Convenience of the Government, clause of this contract.

(b) If a stop-work order issued under this clause is canceled either before or after a final decision in the protest, the Contractor shall resume work. The Contracting Officer shall make an equitable adjustment in the delivery schedule or contract price, or both, and the contract shall be modified, in writing, accordingly, if--

(1) The stop-work order results in an increase in the time required for, or in the Contractor's cost properly allocable to, the performance of any part of this contract; and

(2) The Contractor asserts its right to an adjustment within 30 days after the end of the period of work stoppage; provided, that if the Contracting Officer decides the facts justify the action, the Contracting Officer may receive and act upon a proposal at any time before final payment under this contract.

(c) If a stop-work order is not canceled and the work covered by the order is terminated for the convenience of the Government, the Contracting Officer shall allow reasonable costs resulting from the stop-work order in arriving at the termination settlement.

(d) If a stop-work order is not canceled and the work covered by the order is terminated for default, the Contracting Officer shall allow, by equitable adjustment or otherwise, reasonable costs resulting from the stop-work order.

(e) The Government's rights to terminate this contract at any time are not affected by action taken under this clause.

(f) If, as the result of the Contractor's intentional or negligent misstatement, misrepresentation, or miscertification, a protest related to this contract is sustained, and the Government pays costs, as provided in FAR 33.102(b)(2) or 33.104(h)(1), the Government may require the Contractor to reimburse the Government the amount of such costs. In addition to any other remedy available, and pursuant to the requirements of Subpart 32.6, the Government may collect this debt by offsetting the amount against any payment due the Contractor under any contract between the Contractor and the Government.

(End of clause)

52.236-2 DIFFERING SITE CONDITIONS (APR 1984)

As prescribed in 36.502, insert the following clause in solicitations and contracts when a fixed-price construction contract or a fixed-price dismantling, demolition, or removal of improvements contract is contemplated and the contract amount is expected to exceed the small purchase limitation. The Contracting Officer may insert the clause in solicitations and contracts when a fixed-price construction or a fixed-price contract for dismantling, demolition, or removal of improvements is contemplated and the contract amount is expected to be within the small purchase limitation.

(a) The Contractor shall promptly, and before the conditions are disturbed, give a written notice to the Contracting Officer of

(1) subsurface or latent physical conditions at the site which differ materially from those indicated in this contract, or

(2) unknown physical conditions at the site, of an unusual nature, which differ materially from those ordinarily encountered and generally recognized as inhering in work of the character provided for in the contract.

(b) The Contracting Officer shall investigate the site conditions promptly after receiving the notice. If the conditions do materially so differ and cause an increase or decrease in the Contractor's cost of, or the time required for, performing any part of the work under this contract, whether or not changed as a result of the conditions, an equitable adjustment shall be made under this clause and the contract modified in writing accordingly.

(c) No request by the Contractor for an equitable adjustment to the contract under this clause shall be allowed, unless the Contractor has given the written notice required; provided, that the time prescribed in (a) above for giving written notice may be extended by the Contracting Officer.

(d) No request by the Contractor for an equitable adjustment to the contract for differing site conditions shall be allowed if made after final payment under this contract.

(End of clause)

52.236-3 SITE INVESTIGATION AND CONDITIONS AFFECTING THE WORK (APR 1984)

(a) The Contractor acknowledges that it has taken steps reasonably necessary to ascertain the nature and location of the work, and that it has investigated and satisfied itself as to the general and local conditions which can affect the work or its cost, including but not limited to

(1) conditions bearing upon transportation, disposal, handling, and storage of materials;

(2) the availability of labor, water, electric power, and roads;

(3) uncertainties of weather, river stages, tides, or similar physical conditions at the site;

(4) the conformation and conditions of the ground; and (5) the character of equipment and facilities needed preliminary to and during work performance. The Contractor also acknowledges that it has satisfied itself as to the character, quality, and quantity of surface and subsurface materials or obstacles to be encountered insofar as this information is reasonably ascertainable from an inspection of the site, including all exploratory work done by the Government, as well as from the drawings and specifications made a part of this contract. Any failure of the Contractor to take the actions described and acknowledged in this paragraph will not relieve the Contractor from responsibility for estimating properly the difficulty and cost of successfully performing the work, or for proceeding to successfully perform the work without additional expense to the Government.

(b) The Government assumes no responsibility for any conclusions or interpretations made by the Contractor based on the information made available by the Government. Nor does the Government assume responsibility for any understanding reached or representation made concerning conditions which can affect the work by any of its officers or agents before the execution of this contract, unless that understanding or representation is expressly stated in this contract.

(End of clause)

52.236-5 MATERIAL AND WORKMANSHIP (APR 1984)

(a) All equipment, material, and articles incorporated into the work covered by this contract shall be new and of the most suitable grade for the purpose intended, unless otherwise specifically provided in this contract. References in the specifications to equipment, material, articles, or patented processes by trade name, make, or catalog number, shall be regarded as establishing a standard of quality and shall not be construed as limiting competition. The Contractor may, at its option, use any equipment, material, article, or process that, in the judgment of the Contracting Officer, is equal to that named in the specifications, unless otherwise specifically provided in this contract.

(b) The Contractor shall obtain the Contracting Officer's approval of the machinery and mechanical and other equipment to be incorporated into the work. When requesting approval, the Contractor shall furnish to the Contracting Officer the name of the manufacturer, the model number, and other information concerning the performance, capacity, nature, and rating of the machinery and mechanical and other equipment. When required by this contract or by the Contracting Officer, the Contractor shall also obtain the Contracting Officer's approval of the material or articles which the Contractor contemplates incorporating into the work. When requesting approval, the Contractor shall provide full information concerning the material or articles. When directed to do so, the Contractor shall submit samples for approval at the Contractor's expense, with all shipping charges prepaid. Machinery, equipment, material, and articles that do not have the required approval shall be installed or used at the risk of subsequent rejection.

(c) All work under this contract shall be performed in a skillful and workmanlike manner. The Contracting Officer may require, in writing, that the Contractor remove from the work any employee the Contracting Officer deems incompetent, careless, or otherwise objectionable.

(End of clause)

52.236-6 SUPERINTENDENCE BY THE CONTRACTOR (APR 1984)

At all times during performance of this contract and until the work is completed and accepted, the Contractor shall directly superintend the work or assign and have on the worksite a competent superintendent who is satisfactory to the Contracting Officer and has authority to act for the Contractor.

(End of clause)

52.236-7 PERMITS AND RESPONSIBILITIES (NOV 1991)

The Contractor shall, without additional expense to the Government, be responsible for obtaining any necessary licenses and permits, and for complying with any Federal, State, and municipal laws, codes, and regulations applicable to the performance of the work. The Contractor shall also be responsible for all damages to persons or property that occur as a result of the Contractor's fault or negligence. The Contractor shall also be responsible for all materials delivered and work performed until completion and acceptance of the entire work, except for any completed unit of work which may have been accepted under the contract.

(End of clause)

52.236-8 OTHER CONTRACTS (APR 1984)

The Government may undertake or award other contracts for additional work at or near the site of the work under this contract. The Contractor shall fully cooperate with the other contractors and with Government employees and shall carefully adapt scheduling and performing the work under this contract to accommodate the additional work, heeding any direction that may be provided by the Contracting Officer. The Contractor shall not commit or permit any act that will interfere with the performance of work by any other contractor or by Government employees.

(End of clause)

52.236-9 PROTECTION OF EXISTING VEGETATION, STRUCTURES, EQUIPMENT, UTILITIES, AND IMPROVEMENTS (APR 1984)

(a) The Contractor shall preserve and protect all structures, equipment, and vegetation (such as trees, shrubs, and grass) on or adjacent to the work site, which are not to be removed and which do not unreasonably interfere with the work required under this contract. The Contractor shall only remove trees when specifically authorized to do so, and shall avoid damaging vegetation that will remain in place. If any limbs or branches of trees are broken during contract performance, or by the careless operation of equipment, or by workmen, the Contractor shall trim those limbs or branches with a clean cut and paint the cut with a tree-pruning compound as directed by the Contracting Officer.

(b) The Contractor shall protect from damage all existing improvements and utilities

(1) at or near the work site, and

(2) on adjacent property of a third party, the locations of which are made known to or should be known by the Contractor. The Contractor shall repair any damage to those facilities, including those that are the property of a third party, resulting from failure to comply with the requirements of this contract or failure to exercise reasonable care in performing the work. If the Contractor fails or refuses to repair the damage promptly, the Contracting Officer may have the necessary work performed and charge the cost to the Contractor.
(End of clause)

52.236-10 OPERATIONS AND STORAGE AREAS (APR 1984)

(a) The Contractor shall confine all operations (including storage of materials) on Government premises to areas authorized or approved by the Contracting Officer. The Contractor shall hold and save the Government, its officers and agents, free and harmless from liability of any nature occasioned by the Contractor's performance.

(b) Temporary buildings (e.g., storage sheds, shops, offices) and utilities may be erected by the Contractor only with the approval of the Contracting Officer and shall be built with labor and materials furnished by the Contractor without expense to the Government. The temporary buildings and utilities shall remain the property of the Contractor and shall be removed by the Contractor at its expense upon completion of the work. With the written consent of the Contracting Officer, the buildings and utilities may be abandoned and need not be removed.

(c) The Contractor shall, under regulations prescribed by the Contracting Officer, use only established roadways, or use temporary roadways constructed by the Contractor when and as authorized by the Contracting Officer. When materials are transported in prosecuting the work, vehicles shall not be loaded beyond the loading capacity recommended by the manufacturer of the vehicle or prescribed by any Federal, State, or local law or regulation. When it is necessary to cross curbs or sidewalks, the Contractor shall protect them from damage. The Contractor shall repair or pay for the repair of any damaged curbs, sidewalks, or roads.
(End of clause)

52.236-11 USE AND POSSESSION PRIOR TO COMPLETION (APR 1984)

(a) The Government shall have the right to take possession of or use any completed or partially completed part of the work. Before taking possession of or using any work, the Contracting Officer shall furnish the Contractor a list of items of work remaining to be performed or corrected on those portions of the work that the Government intends to take possession of or use. However, failure of the Contracting Officer to list any item of work shall not relieve the Contractor of responsibility for complying with the terms of the contract. The Government's possession or use shall not be deemed an acceptance of any work under the contract.

(b) While the Government has such possession or use, the Contractor shall be relieved of the responsibility for the loss of or damage to the work resulting from the Government's possession or use, notwithstanding the terms of the clause in this contract entitled "Permits and Responsibilities." If prior possession or use by the Government delays the progress of the work or causes additional expense to the Contractor, an equitable adjustment shall be made in the contract price or the time of completion, and the contract shall be modified in writing accordingly.

(End of clause)

52.236-12 CLEANING UP (APR 1984)

The Contractor shall at all times keep the work area, including storage areas, free from accumulations of waste materials. Before completing the work, the Contractor shall remove from the work and premises any rubbish, tools, scaffolding, equipment, and materials that are not the property of the Government. Upon completing the work, the Contractor shall leave the work area in a clean, neat, and orderly condition satisfactory to the Contracting Officer.

(End of clause)

52.236-13 ACCIDENT PREVENTION (NOV 1991)

(a) The Contractor shall provide and maintain work environments and procedures which will

(1) safeguard the public and Government personnel, property, materials, supplies, and equipment exposed to Contractor operations and activities;

(2) avoid interruptions of Government operations and delays in project completion dates; and

(3) control costs in the performance of this contract.

(b) For these purposes on contracts for construction or dismantling, demolition, or removal of improvements, the Contractor shall-

(1) Provide appropriate safety barricades, signs, and signal lights;

(2) Comply with the standards issued by the Secretary of Labor at 29 CFR Part 1926 and 29 CFR Part 1910; and

(3) Ensure that any additional measures the Contracting Officer determines to be reasonably necessary for the purposes are taken.

(c) If this contract is for construction or dismantling, demolition or removal of improvements with any Department of Defense agency or component, the Contractor shall comply with all pertinent provisions of the latest version of U.S. Army Corps of Engineers Safety and Health Requirements Manual, EM 385-1-1, in effect on the date of the solicitation.

(d) Whenever the Contracting Officer becomes aware of any noncompliance with these requirements or any condition which poses a serious or imminent danger to the health or safety of the public or Government personnel, the Contracting Officer shall notify the Contractor orally, with written confirmation, and request immediate initiation of corrective action. This notice, when delivered to the Contractor or the Contractor's representative at the work site, shall be deemed sufficient notice of the noncompliance and that corrective action is required. After receiving the notice, the Contractor shall immediately take corrective action. If the Contractor fails or refuses to promptly take corrective action, the Contracting Officer may issue an order stopping all or part of the work until satisfactory corrective action has been taken. The Contractor shall not be entitled to any equitable adjustment of the contract price or extension of the performance schedule on any stop work order issued under this clause.

(f) The Contractor shall insert this clause, including this paragraph (e), with appropriate changes in the designation of the parties, in subcontracts.

(End of clause)

52.236-15 SCHEDULES FOR CONSTRUCTION CONTRACTS (APR 1984)

(a) The Contractor shall, within five days after the work commences on the contract or another period of time determined by the Contracting Officer, prepare and submit to the Contracting Officer for approval three copies of a practicable schedule showing the order in which the Contractor proposes to perform the work, and the dates on which the Contractor contemplates starting and completing the several salient features of the work (including acquiring materials, plant, and equipment). The schedule shall be in the form of a progress chart of suitable scale to indicate appropriately the percentage of work scheduled for completion by any given date during the period. If the Contractor fails to submit a schedule within the time prescribed, the Contracting Officer may withhold approval of progress payments until the Contractor submits the required schedule.

(b) The Contractor shall enter the actual progress on the chart as directed by the Contracting Officer, and upon doing so shall immediately deliver three copies of the annotated schedule to the Contracting Officer. If, in the opinion of the Contracting Officer, the Contractor falls behind the approved schedule, the Contractor shall take steps necessary to improve its progress, including those that may be required by the Contracting Officer, without additional cost to the Government. In this circumstance, the Contracting Officer may require the Contractor to increase the number of shifts, overtime operations, days of work, and/or the amount of construction plant, and to submit for approval any supplementary schedule or schedules in chart form as the Contracting Officer deems necessary to demonstrate how the approved rate of progress will be regained.

(c) Failure of the Contractor to comply with the requirements of the Contracting Officer under this clause shall be grounds for a determination by the Contracting Officer that the Contractor is not prosecuting the work with sufficient diligence to ensure completion within the time specified in the contract. Upon making this determination, the Contracting Officer may terminate the Contractor's right to proceed with the work, or any separable part of it, in accordance with the default terms of this contract.

(End of clause)

52.236-17 LAYOUT OF WORK (APR 1984)

The Contractor shall lay out its work from Government established base lines and bench marks indicated on the drawings, and shall be responsible for all measurements in connection with the layout. The Contractor shall furnish, at its own expense, all stakes, templates, platforms, equipment, tools, materials, and labor required to lay out any part of the work. The Contractor shall be responsible for executing the work to the lines and grades that may be established or indicated by the Contracting Officer. The Contractor shall also be responsible for maintaining and preserving all stakes and other marks established by the Contracting Officer until authorized to remove them. If such marks are destroyed by the Contractor

or through its negligence before their removal is authorized, the Contracting Officer may replace them and deduct the expense of the replacement from any amounts due or to become due to the Contractor.

(End of clause)

52.236-21 SPECIFICATIONS AND DRAWINGS FOR CONSTRUCTION (FEB 1997)

(a) The Contractor shall keep on the work site a copy of the drawings and specifications and shall at all times give the Contracting Officer access thereto. Anything mentioned in the specifications and not shown on the drawings, or shown on the drawings and not mentioned in the specifications, shall be of like effect as if shown or mentioned in both. In case of difference between drawings and specifications, the specifications shall govern. In case of discrepancy in the figures, in the drawings, or in the specifications, the matter shall be promptly submitted to the Contracting Officer, who shall promptly make a determination in writing. Any adjustment by the Contractor without such a determination shall be at its own risk and expense. The Contracting Officer shall furnish from time to time such detailed drawings and other information as considered necessary, unless otherwise provided.

(b) Wherever in the specifications or upon the drawings the words "directed", "required", "ordered", "designated", "prescribed", or words of like import are used, it shall be understood that the "direction", "requirement", "order", "designation", or "prescription", of the Contracting Officer is intended and similarly the words "approved", "acceptable", "satisfactory", or words of like import shall mean "approved by," or "acceptable to", or "satisfactory to" the Contracting Officer, unless otherwise expressly stated.

(c) Where "as shown," as indicated", "as detailed", or words of similar import are used, it shall be understood that the reference is made to the drawings accompanying this contract unless stated otherwise. The word "provided" as used herein shall be understood to mean "provide complete in place," that is "furnished and installed".

(d) Shop drawings means drawings, submitted to the Government by the Contractor, subcontractor, or any lower tier subcontractor pursuant to a construction contract, showing in detail (1) the proposed fabrication and assembly of structural elements, and (2) the installation (i.e., fit, and attachment details) of materials or equipment. It includes drawings, diagrams, layouts, schematics, descriptive literature, illustrations, schedules, performance and test data, and similar materials furnished by the contractor to explain in detail specific portions of the work required by the contract. The Government may duplicate, use, and disclose in any manner and for any purpose shop drawings delivered under this contract.

(e) If this contract requires shop drawings, the Contractor shall coordinate all such drawings, and review them for accuracy, completeness, and compliance with contract requirements and shall indicate its approval thereon as evidence of such coordination and review. Shop drawings submitted to the Contracting Officer without evidence of the Contractor's approval may be returned for resubmission. The Contracting Officer will indicate an approval or disapproval of the shop drawings and if not approved as submitted shall indicate the Government's reasons therefor. Any work done before such approval shall be at the Contractor's risk. Approval by the Contracting Officer shall not relieve the Contractor from responsibility for any errors or omissions in such drawings, nor from responsibility for complying with the requirements of this contract, except with respect to variations described and approved in accordance with (f) below.

(f) If shop drawings show variations from the contract requirements, the Contractor shall describe such variations in writing, separate from the drawings, at the time of submission. If the Contracting Officer approves any such variation, the Contracting Officer shall issue an appropriate contract modification, except that, if the variation is minor or does not involve a change in price or in time of performance, a modification need not be issued.

(g) The Contractor shall submit to the Contracting Officer for approval four copies (unless otherwise indicated) of all shop drawings as called for under the various headings of these specifications. Three sets (unless otherwise indicated) of all shop drawings, will be retained by the Contracting Officer and one set will be returned to the Contractor.

52.236-26 PRECONSTRUCTION CONFERENCE (FEB 1995)

If the Contracting Officer decides to conduct a preconstruction conference, the successful offeror will be notified and will be required to attend. The Contracting Officer's notification will include specific details regarding the date, time, and location of the conference, any need for attendance by subcontractors, and information regarding the items to be discussed.

(End of clause)

52.242-13 BANKRUPTCY (JUL 1995)

In the event the Contractor enters into proceedings relating to bankruptcy, whether voluntary or involuntary, the Contractor agrees to furnish, by certified mail or electronic commerce method authorized by the contract, written notification of the bankruptcy to the Contracting Officer responsible for administering the contract. This notification shall be furnished within five days of the initiation of the proceedings relating to bankruptcy filing. This notification shall include the date on which the bankruptcy petition was filed, the identity of the court in which the bankruptcy petition was filed, and a listing of Government contract numbers and contracting offices for all Government contracts against which final payment has not been made. This obligation remains in effect until final payment under this contract.

(End of clause)

52.242-14 SUSPENSION OF WORK (APR 1984)

(a) The Contracting Officer may order the Contractor, in writing, to suspend, delay, or interrupt all or any part of the work of this contract for the period of time that the Contracting Officer determines appropriate for the convenience of the Government.

(b) If the performance of all or any part of the work is, for an unreasonable period of time, suspended, delayed, or interrupted (1) by an act of the Contracting Officer in the administration of this contract, or (2) by the Contracting Officer's failure to act within the time specified in this contract (or within a reasonable time if not specified), an adjustment shall be made for any increase in the cost of performance of this contract (excluding profit) necessarily caused by the unreasonable suspension, delay, or interruption, and the contract modified in writing accordingly. However, no adjustment shall be made under this clause for any suspension, delay, or interruption to the extent that performance would have been so suspended, delayed, or interrupted by any other cause, including the fault or negligence of the Contractor, or for which an equitable adjustment is provided for or excluded under any other term or condition of this contract. (c) A claim under this clause shall not be allowed (1) for any costs incurred more than 20 days before the Contractor shall have notified the Contracting Officer in writing of the act or failure to act involved (but this requirement shall not apply as to a claim resulting from a suspension order), and (2) unless the claim, in an amount stated, is asserted in writing as soon as practicable after the termination of the suspension, delay, or interruption, but not later than the date of final payment under the contract.

(End of clause)

52.243-3 CHANGES--TIME-AND-MATERIALS OR LABOR-HOURS (SEP 2000)

(a) The Contracting Officer may at any time, by written order, and without notice to the sureties, if any, make changes within the general scope of this contract in any one or more of the following:

(1) Description of services to be performed.

(2) Time of performance (i.e., hours of the day, days of the week, etc.).

(3) Place of performance of the services.

(4) Drawings, designs, or specifications when the supplies to be furnished are to be specially manufactured for the Government in accordance with the drawings, designs, or specifications.

(5) Method of shipment or packing of supplies.

(6) Place of delivery.

(7) Amount of Government-furnished property.

(b) If any change causes an increase or decrease in any hourly rate, the ceiling price, or the time required for performance of any part of the work under this contract, whether or not changed by the order, or otherwise affects any other terms and conditions of this contract, the Contracting Officer will make an equitable adjustment in any one or more of the following and will modify the contract accordingly:

(1) Ceiling price.

(2) Hourly rates.

(3) Delivery schedule.

(4) Other affected terms.

(c) The Contractor shall assert its right to an adjustment under this clause within 30 days from the date of receipt of the written order. However, if the Contracting Officer decides that the facts justify it, the Contracting Officer may receive and act upon a proposal submitted before final payment of the contract.

(d) Failure to agree to any adjustment will be a dispute under the Disputes clause. However, nothing in this clause excuses the Contractor from proceeding with the contract as changed.

(End of clause)

52.243-4 CHANGES (AUG 1987)

(a) The Contracting Officer may, at any time, without notice to the sureties, if any, by written order designated or indicated to be a change order, make changes in the work within the general scope of the contract, including changes--

(1) In the specifications (including drawings and designs);

(2) In the method or manner of performance of the work;

(3) In the Government-furnished facilities, equipment, materials, services, or site; or

(4) Directing acceleration in the performance of the work.

(b) Any other written or oral order (which, as used in this paragraph (b), includes direction, instruction, interpretation, or determination) from the Contracting Officer that causes a change shall be treated as a change order under this clause; provided, that the Contractor gives the Contracting Officer written notice stating

(1) the date, circumstances, and source of the order and

(2) that the Contractor regards the order as a change order.

(c) Except as provided in this clause, no order, statement, or conduct of the Contracting Officer shall be

treated as a change under this clause or entitle the Contractor to an equitable adjustment.

(d) If any change under this clause causes an increase or decrease in the Contractor's cost of, or the time required for, the performance of any part of the work under this contract, whether or not changed by any such order, the Contracting Officer shall make an equitable adjustment and modify the contract in writing. However, except for an adjustment based on defective specifications, no adjustment for any change under paragraph (b) of this clause shall be made for any costs incurred more than 20 days before the Contractor gives written notice as required. In the case of defective specifications for which the Government is responsible, the equitable adjustment shall include any increased cost reasonably incurred by the Contractor in attempting to comply with the defective specifications.

(e) The Contractor must assert its right to an adjustment under this clause within 30 days after

(1) receipt of a written change order under paragraph (a) of this clause or (2) the furnishing of a written notice under paragraph (b) of this clause, by submitting to the Contracting Officer a written statement describing the general nature and amount of the proposal, unless this period is extended by the Government. The statement of proposal for adjustment may be included in the notice under paragraph (b) above.

(f) No proposal by the Contractor for an equitable adjustment shall be allowed if asserted after final payment under this contract.

(End of clause)

52.245-2 GOVERNMENT PROPERTY (FIXED-PRICE CONTRACTS) (MAY 2004)

(a) Government-furnished property.

(1) Overseas contracts. If this contract is to be performed outside of the United States and its outlying areas, the words ``Government'' and ``Government-furnished'' (wherever they appear in this clause) shall be construed as ``United States Government'' and ``United States Government-furnished,'' respectively.

(2) The delivery or performance dates for this contract are based upon the expectation that Government-furnished property suitable for use (except for property furnished "as is") will be delivered to the Contractor at the times stated in the Schedule or, if not so stated, in sufficient time to enable the Contractor to meet the contract's delivery or performance dates.

(3) If Government-furnished property is received by the Contractor in a condition not suitable for the intended use, the Contractor shall, upon receipt of it, notify the Contracting Officer, detailing the facts, and, as directed by the Contracting Officer and at Government expense, either repair, modify, return, or otherwise dispose of the property. After completing the directed action and upon written request of the Contractor, the Contracting Officer shall make an equitable adjustment as provided in paragraph (h) of this clause.

(4) If Government-furnished property is not delivered to the Contractor by the required time, the Contracting Officer shall, upon the Contractor's timely written request, make a determination of the delay, if any, caused the Contractor and shall make an equitable adjustment in accordance with paragraph (h) of this clause.

(b) Changes in Government-furnished property. (1) The Contracting Officer may, by written notice, (i) decrease the Government-furnished property provided or to be provided under this contract, or (ii) substitute other Government-furnished property for the property to be provided by the Government, or to be acquired by the Contractor for the Government, under this contract. The Contractor shall promptly take such action as the Contracting Officer may direct regarding the removal, shipment, or disposal of the property covered by such notice.

(2) Upon the Contractor's written request, the Contracting Officer shall make an equitable adjustment to the contract in accordance with paragraph (h) of this clause, if the Government has agreed in the Schedule to make the property available for performing this contract and there is any--

(i) Decrease or substitution in this property pursuant to subparagraph (b)(1) of this clause; or

(ii) Withdrawal of authority to use this property, if provided under any other contract or lease.

(c) Title in Government property. (1) The Government shall retain title to all Government-furnished property.

(2) All Government-furnished property and all property acquired by the Contractor, title to which vests in the Government under this paragraph (collectively referred to as "Government property"), are subject to the provisions of this clause. However, special tooling accountable to this contract is subject to the provisions of the Special Tooling clause and is not subject to the provisions of this clause. Title to Government property shall not be affected by its incorporation into or attachment to any property not owned by the Government, nor shall Government property become a fixture or lose its identity as personal property by being attached to any real property.

(3) Title to each item of facilities and special test equipment acquired by the Contractor for the Government under this contract shall pass to and vest in the Government when its use in performing this contract commences or when the Government has paid for it, whichever is earlier, whether or not title previously vested in the Government.

(4) If this contract contains a provision directing the Contractor to purchase material for which the Government will reimburse the Contractor as a direct item of cost under this contract--

(i) Title to material purchased from a vendor shall pass to and vest in the Government upon the vendor's delivery of such material; and

(ii) Title to all other material shall pass to and vest in the Government upon--

(A) Issuance of the material for use in contract performance;

(B) Commencement of processing of the material or its use in contract performance; or

(C) Reimbursement of the cost of the material by the Government, whichever occurs first.

(d) Use of Government property. The Government property shall be used only for performing this contract, unless otherwise provided in this contract or approved by the Contracting Officer.

(e) Property administration. (1) The Contractor shall be responsible and accountable for all Government property provided under this contract and shall comply with Federal Acquisition Regulation (FAR) Subpart 45.5, as in effect on the date of this contract.

(2) The Contractor shall establish and maintain a program for the use, maintenance, repair, protection, and preservation of Government property in accordance with sound industrial practice and the applicable provisions of Subpart 45.5 of the FAR.

(3) If damage occurs to Government property, the risk of which has been assumed by the Government under this contract, the Government shall replace the items or the Contractor shall make such repairs as the Government directs. However, if the Contractor cannot effect such repairs within the time required, the Contractor shall dispose of the property as directed by the Contracting Officer. When any property for which the Government is responsible is replaced or repaired, the Contracting Officer shall make an equitable adjustment in accordance with paragraph (h) of this clause.

(4) The Contractor represents that the contract price does not include any amount for repairs or replacement for which the Government is responsible. Repair or replacement of property for which the Contractor is responsible shall be accomplished by the Contractor at its own expense.

(f) Access. The Government and all its designees shall have access at all reasonable times to the premises in which any Government property is located for the purpose of inspecting the Government property.

(g) Risk of loss. Unless otherwise provided in this contract, the Contractor assumes the risk of, and shall be responsible for, any loss or destruction of, or damage to, Government property upon its delivery to the Contractor or upon passage of title to the Government under paragraph (c) of this clause. However, the Contractor is not responsible for reasonable wear and tear to Government property or for Government property properly consumed in performing this contract.

(h) Equitable adjustment. When this clause specifies an equitable adjustment, it shall be made to any affected contract provision in accordance with the procedures of the Changes clause. When appropriate, the Contracting Officer may initiate an equitable adjustment in favor of the Government. The right to an equitable adjustment shall be the Contractor's exclusive remedy. The Government shall not be liable to suit for breach of contract for--

(1) Any delay in delivery of Government-furnished property;

(2) Delivery of Government-furnished property in a condition not suitable for its intended use;

(3) A decrease in or substitution of Government-furnished property; or

(4) Failure to repair or replace Government property for which the Government is responsible.

(i) Government property disposal. Except as provided in paragraphs (i)(1)(i), (i)(2), and (i)(8)(i) of this clause, the
Contractor shall not dispose of Government property until authorized to do so by the Plant Clearance Officer.

(1) Scrap (to which the Government has obtained title under paragraph (c) of this clause).--(i) Contractor with an approved scrap procedure.--(A) The Contractor may dispose of scrap resulting from production or testing under this contract without Government approval. However, if the scrap requires demilitarization or is sensitive property, the Contractor shall submit the scrap on an inventory disposal schedule.

(B) For scrap from other than production or testing the Contractor may prepare scrap lists in lieu of inventory disposal schedules (provided such lists are consistent with the approved scrap procedures), except that inventory disposal schedules shall be submitted for scrap aircraft or aircraft parts and scrap that--

(1) Requires demilitarization;

(2) Is a classified item;

(3) Is generated from classified items;

(4) Contains hazardous materials or hazardous wastes;

(5) Contains precious metals; or

(6) Is dangerous to the public health, safety, or welfare.

(ii) Contractor without an approved scrap procedure. The Contractor shall submit an inventory disposal schedule for all scrap.

(2) Pre-disposal requirements. When the Contractor determines that a property item acquired or produced by the Contractor, to which the Government has obtained title under paragraph (c) of this clause, is no longer needed for performance of this contract, the Contractor, in the following order of priority:

(i) May purchase the property at the **acquisition** cost.

(ii) Shall make reasonable efforts to return unused property to the appropriate supplier at fair market value (less, if applicable, a reasonable restocking fee that is consistent with the supplier's customary practices).

(iii) Shall list, on Standard Form 1428, Inventory Disposal Schedule, property that was not purchased under paragraph (i)(2)(i) of this clause, could not be returned to a supplier, or could not be used in the performance of other Government contracts.

(3) Inventory disposal schedules.--(i) The Contractor shall use Standard Form 1428, Inventory Disposal Schedule, to identify--

(A) Government-furnished property that is no longer required for performance of this contract, provided the terms of another Government contract do not require the Government to furnish that property for performance of that contract; and

(B) Property acquired or produced by the Contractor, to which the Government has obtained title under paragraph (c) of this clause, that is no longer required for performance of that contract.

(ii) The Contractor may annotate inventory disposal schedules to identify property the Contractor wishes to purchase from the Government.

(iii) Unless the Plant Clearance Officer has agreed otherwise, or the contract requires electronic submission of inventory disposal schedules, the Contractor shall prepare separate inventory disposal schedules for--

(A) Special test equipment with commercial components;

(B) Special test equipment without commercial components;

(C) Printing equipment;

(D) Computers, components thereof, peripheral equipment, and related equipment;

(E) Precious Metals;

(F) Nonnuclear hazardous materials or hazardous wastes; or

(G) Nuclear materials or nuclear wastes.

(iv) Property with the same description, condition code, and reporting location may be grouped in a single line item. The Contractor shall describe special test equipment in sufficient detail to permit an understanding of the special test equipment's intended use.

(4) Submission requirements. The Contractor shall submit inventory disposal schedules to the Plant Clearance Officer no later than--

(i) Thirty days following the Contractor's determination that a Government property item is no longer required for performance of the contract;

(ii) Sixty days, or such longer period as may be approved by the Plant Clearance Officer, following completion of contract deliveries or performance; or

(iii) One hundred twenty days, or such longer period as may be approved by the Plant Clearance Officer, following contract termination in whole or in part.

(5) Corrections. The Plant Clearance Officer may require the Contractor to correct an inventory disposal schedule or may reject a schedule if the property identified on the schedule is not accountable under this contract or is not in the quantity or condition indicated.

(6) Postsubmission adjustments. The Contractor shall provide the Plant Clearance Officer at least 10 working days advance written notice of its intent to remove a property item from an approved inventory disposal schedule. Unless the Plant Clearance Officer objects to the intended schedule adjustment within the notice period, the Contractor may make the adjustment upon expiration of the notice period.

(7) Storage.--

(i) The Contractor shall store the property identified on an inventory disposal schedule pending receipt of disposal instructions. The Government's failure to provide disposal instructions within 120 days following acceptance of an inventory disposal schedule might entitle the Contractor to an equitable adjustment for costs incurred to store such property on or after the 121st day.

(ii) The Contractor shall obtain the Plant Clearance Officer's approval to remove Government property from the premises at which the property is currently located prior to receipt of final disposition instructions. If approval is granted, any costs incurred by the Contractor to transport or store the property shall not increase the price or fee of any Government contract. The storage facility shall be appropriate for assuring the property's physical safety and suitability for use. Approval does not relieve the Contractor of any liability under this contract for such property.

(8) Disposition instructions.

(i) If the Government does not provide disposition instructions to the Contractor within 45 days following acceptance of a scrap list, the Contractor may dispose of the listed scrap in accordance with the Contractor's approved scrap procedures.

(ii) The Contractor shall prepare for shipment, deliver f.o.b. origin, or dispose of Government property as directed by the Plant Clearance Officer. The Contractor shall remove and destroy any markings identifying the property as Government property prior to disposing of the property.

(iii) The Contracting Officer may require the Contractor to demilitarize the property prior to shipment or disposal. Any equitable adjustment incident to the Contracting Officer's direction to demilitarize Government property shall be made in accordance with paragraph (h) of this clause.

(9) Disposal proceeds. The Contractor shall credit the net proceeds from the disposal of Government property to the price or cost of work covered by this contract or to the Government as the Contracting Officer directs.

(10) Subcontractor inventory disposal schedules. The Contractor shall require a subcontractor that is using property accountable under this contract at a subcontractor-managed site to submit inventory disposal schedules to the Contractor in sufficient time for the Contractor to comply with the requirements of paragraph (i)(4) of this clause.

(j) Abandonment of Government property.

(1) The Government will not abandon sensitive Government property without the Contractor's written consent.

(2) The Government, upon notice to the Contractor, may abandon any nonsensitive Government property in place at which time all obligations of the Government regarding such abandoned property shall cease.

(3) The Government has no obligation to restore or rehabilitate the Contractor's premises under any circumstances; however, if Government-furnished property is withdrawn or is unsuitable for the intended use, or if other Government property is substituted, then the equitable adjustment under paragraph (h) of this clause may properly include restoration or rehabilitation costs.

(k) Communications. All communications under this clause shall be in writing.

(l) Overseas contracts. If this contract is to be performed outside of the United States of America, its territories, or possessions, the words "Government" and "Government-furnished" (wherever they appear in this clause) shall be construed as "United States Government" and "United States Government-furnished," respectively.

(End of clause)

52.246-12 INSPECTION OF CONSTRUCTION (AUG 1996)

(a) Definition. "Work" includes, but is not limited to, materials, workmanship, and manufacture and fabrication of components.

(b) The Contractor shall maintain an adequate inspection system and perform such inspections as will ensure that the work performed under the contract conforms to contract requirements. The Contractor shall maintain complete inspection records and make them available to the Government. All work shall be conducted under the general direction of the Contracting Officer and is subject to Government inspection and test at all places and at all reasonable times before acceptance to ensure strict compliance with the terms of the contract.

(c) Government inspections and tests are for the sole benefit of the Government and do not--

(1) Relieve the Contractor of responsibility for providing adequate quality control measures;

(2) Relieve the Contractor of responsibility for damage to or loss of the material before acceptance;

(3) Constitute or imply acceptance; or

(4) Affect the continuing rights of the Government after acceptance of the completed work under paragraph (i) of this section.

(d) The presence or absence of a Government inspector does not relieve the Contractor from any contract requirement, nor is the inspector authorized to change any term or condition of the specification without the Contracting Officer's written authorization.

(e) The Contractor shall promptly furnish, at no increase in contract price, all facilities, labor, and material reasonably needed for performing such safe and convenient inspections and tests as may be required by the Contracting Officer. The Government may charge to the Contractor any additional cost of inspection or test when work is not ready at the time specified by the Contractor for inspection or test, or when prior rejection makes reinspection or retest necessary. The Government shall perform all inspections and tests in a manner that will not unnecessarily delay the work. Special, full size, and performance tests shall be performed as described in the contract.

(f) The Contractor shall, without charge, replace or correct work found by the Government not to conform to contract requirements, unless in the public interest the Government consents to accept the work with an appropriate adjustment in contract price. The Contractor shall promptly segregate and remove rejected material from the premises.

(g) If the Contractor does not promptly replace or correct rejected work, the Government may (1) by contract or otherwise, replace or correct the work and charge the cost to the Contractor or (2) terminate for default the Contractor's right to proceed.

(h) If, before acceptance of the entire work, the Government decides to examine already completed work by removing it or tearing it out, the Contractor, on request, shall promptly furnish all necessary facilities, labor, and material. If the work is found to be defective or nonconforming in any material respect due to the fault of the Contractor or its subcontractors, the Contractor shall defray the expenses of the examination and of satisfactory reconstruction. However, if the work is found to meet contract requirements, the Contracting Officer shall make an equitable adjustment for the additional services involved in the examination and reconstruction, including, if completion of the work was thereby delayed, an extension of time.

(i) Unless otherwise specified in the contract, the Government shall accept, as promptly as practicable after completion and inspection, all work required by the contract or that portion of the work the Contracting Officer determines can be accepted separately. Acceptance shall be final and conclusive except for latent defects, fraud, gross mistakes amounting to fraud, or the Government's rights under any warranty or guarantee.

(End of clause)

52.246-21 WARRANTY OF CONSTRUCTION (MAR 1994)

(a) In addition to any other warranties in this contract, the Contractor warrants, except as provided in paragraph (i) of this clause, that work performed under this contract conforms to the contract requirements and is free of any defect in equipment, material, or design furnished, or workmanship performed by the Contractor or any subcontractor or supplier at any tier.

(b) This warranty shall continue for a period of 1 year from the date of final acceptance of the work. If the Government takes possession of any part of the work before final acceptance, this warranty shall continue for a period of 1 year from the date the Government takes possession.

(c) The Contractor shall remedy at the Contractor's expense any failure to conform, or any defect. In addition, the Contractor shall remedy at the Contractor's expense any damage to Government-owned or controlled real or personal property, when that damage is the result of--

(1) The Contractor's failure to conform to contract requirements; or

(2) Any defect of equipment, material, workmanship, or design furnished.

(d) The Contractor shall restore any work damaged in fulfilling the terms and conditions of this clause. The Contractor's warranty with respect to work repaired or replaced will run for 1 year from the date of repair or replacement.

(e) The Contracting Officer shall notify the Contractor, in writing, within a reasonable time after the discovery of any failure, defect, or damage.

(f) If the Contractor fails to remedy any failure, defect, or damage within a reasonable time after receipt of notice, the Government shall have the right to replace, repair, or otherwise remedy the failure, defect, or damage at the Contractor's expense.
(g) With respect to all warranties, express or implied, from subcontractors, manufacturers, or suppliers for work performed and materials furnished under this contract, the Contractor shall--

(1) Obtain all warranties that would be given in normal commercial practice;

(2) Require all warranties to be executed, in writing, for the benefit of the Government, if directed by the Contracting Officer; and

(3) Enforce all warranties for the benefit of the Government, if directed by the Contracting Officer.

(h) In the event the Contractor's warranty under paragraph (b) of this clause has expired, the Government may bring suit at its expense to enforce a subcontractor's, manufacturer's, or supplier's warranty.

(i) Unless a defect is caused by the negligence of the Contractor or subcontractor or supplier at any tier, the Contractor shall not be liable for the repair of any defects of material or design furnished by the Government nor for the repair of any damage that results from any defect in Government-furnished material or design.

(j) This warranty shall not limit the Government's rights under the Inspection and Acceptance clause of this contract with respect to latent defects, gross mistakes, or fraud.

(End of clause)

52.248-3 VALUE ENGINEERING--CONSTRUCTION (FEB 2000)

(a) General. The Contractor is encouraged to develop, prepare, and submit value engineering change proposals (VECP's) voluntarily. The Contractor shall share in any instant contract savings realized from accepted VECP's, in accordance with paragraph (f) below.

(b) Definitions. "Collateral costs," as used in this clause, means agency costs of operation, maintenance, logistic support, or Government-furnished property.

"Collateral savings," as used in this clause, means those measurable net reductions resulting from a VECP in the agency's overall projected collateral costs, exclusive of acquisition savings, whether or not the acquisition cost changes.

"Contractor's development and implementation costs," as used in this clause, means those costs the Contractor incurs on a VECP specifically in developing, testing, preparing, and submitting the VECP, as well as those costs the Contractor incurs to make the contractual changes required by Government acceptance of a VECP.

"Government costs," as used in this clause, means those agency costs that result directly from developing and implementing the VECP, such as any net increases in the cost of testing, operations, maintenance, and logistic support. The term does not include the normal administrative costs of processing the VECP.

"Instant contract savings," as used in this clause, means the estimated reduction in Contractor cost of performance resulting from acceptance of the VECP, minus allowable Contractor's development and implementation costs, including subcontractors' development and implementation costs (see paragraph (h) below).

"Value engineering change proposal (VECP)" means a proposal that--

(1) Requires a change to this, the instant contract, to implement; and

(2) Results in reducing the contract price or estimated cost without impairing essential functions or characteristics; provided, that it does not involve a change--

(i) In deliverable end item quantities only; or

(ii) To the contract type only.

(c) VECP preparation. As a minimum, the Contractor shall include in each VECP the information described in subparagraphs (1) through (7) below. If the proposed change is affected by contractually required configuration management or similar procedures, the instructions in those procedures relating to format, identification, and priority assignment shall govern VECP preparation. The VECP shall include the following:

(1) A description of the difference between the existing contract requirement and that proposed, the comparative advantages and disadvantages of each, a justification when an item's function or characteristics are being altered, and the effect of the change on the end item's performance.

(2) A list and analysis of the contract requirements that must be changed if the VECP is accepted, including any suggested specification revisions.

(3) A separate, detailed cost estimate for

(i) the affected portions of the existing contract requirement and

(ii) the VECP. The cost reduction associated with the VECP shall take into account the Contractor's allowable development and implementation costs, including any amount attributable to subcontracts under paragraph (h) below.

(4) A description and estimate of costs the Government may incur in implementing the VECP, such as test and evaluation and operating and support costs.

(5) A prediction of any effects the proposed change would have on collateral costs to the agency.

(6) A statement of the time by which a contract modification accepting the VECP must be issued in order to achieve the maximum cost reduction, noting any effect on the contract completion time or delivery schedule.

(7) Identification of any previous submissions of the VECP, including the dates submitted, the agencies and contract numbers involved, and previous Government actions, if known.

(d) Submission. The Contractor shall submit VECP's to the Resident Engineer at the worksite, with a copy to the Contracting Officer.

(e) Government action.

(1) The Contracting Officer will notify the Contractor of the status of the VECP within 45 calendar days after the contracting office receives it. If additional time is required, the Contracting Officer will notify the Contractor within the 45-day period and provide the reason for the delay and the expected date of the decision. The Government will process VECP's expeditiously; however, it shall not be liable for any delay in acting upon a VECP.

If the VECP is not accepted, the Contracting Officer will notify the Contractor in writing, explaining the reasons for rejection. The Contractor may withdraw any VECP, in whole or in part, at any time before it is accepted by the Government. The Contracting Officer may require that the Contractor provide written notification before undertaking significant expenditures for VECP effort.

Any VECP may be accepted, in whole or in part, by the Contracting Officer's award of a modification to this contract citing this clause. The Contracting Officer may accept the VECP, even though an agreement on price reduction has not been reached, by issuing the Contractor a notice to proceed with the change. Until a notice to proceed is issued or a contract modification applies a VECP to this contract, the Contractor shall perform in accordance with the existing contract. The decision to accept or reject all or part of any VECP is a unilateral decision made solely at the discretion of the Contracting Officer.

(f) Sharing.

(1) Rates. The Government's share of savings is determined by subtracting Government costs from instant contract savings and multiplying the result by

(i) 45 percent for fixed-price contracts or

(ii) 75 percent for cost-reimbursement contracts.

(2) Payment. Payment of any share due the Contractor for use of a VECP on this contract shall be authorized by a modification to this contract to--

(i) Accept the VECP;

(ii) Reduce the contract price or estimated cost by the amount of instant contract savings; and

(iii) Provide the Contractor's share of savings by adding the amount calculated to the contract price or fee.

(g) Collateral savings. If a VECP is accepted, the Contracting Officer will increase the instant contract amount by 20 percent of any projected collateral savings determined to be realized in a typical year of use after subtracting any Government costs not previously offset. However, the Contractor's share of collateral savings will not exceed the contract's firm-fixed-price or estimated cost, at the time the VECP is accepted, or $100,000, whichever is greater. The Contracting Officer is the sole determiner of the amount of collateral savings.

(h) Subcontracts. The Contractor shall include an appropriate value engineering clause in any subcontract of $50,000 or more and may include one in subcontracts of lesser value. In computing any adjustment in this contract's price under paragraph (f) above, the Contractor's allowable development and implementation costs shall include any subcontractor's allowable development and implementation costs clearly resulting from a VECP accepted by the Government under this contract, but shall exclude any value engineering incentive payments to a subcontractor. The Contractor may choose any arrangement for subcontractor value engineering incentive payments; provided, that these payments shall not reduce the Government's share of the savings resulting from the VECP.

(i) Data. The Contractor may restrict the Government's right to use any part of a VECP or the supporting data by marking the following legend on the affected parts:

"These data, furnished under the Value Engineering-- Construction clause of contract . . . . . , shall not be disclosed outside the Government or duplicated, used, or disclosed, in whole or in part, for any purpose other than to evaluate a value engineering change proposal submitted under the clause. This restriction does not limit the Government's right to use information contained in these data if it has been obtained or is otherwise available from the Contractor or from another source without limitations." If a VECP is accepted, the Contractor hereby grants the Government unlimited rights in the VECP and supporting data, except that, with respect to data qualifying and submitted as limited rights technical data, the Government shall have the rights specified in the contract modification implementing the VECP and shall appropriately mark the data. (The terms "unlimited rights" and "limited rights" are defined in Part 27 of the Federal Acquisition Regulation.)

(End of clause)

52.249-2 TERMINATION FOR CONVENIENCE OF THE GOVERNMENT (FIXED-PRICE) (MAY 2004)

(a) The Government may terminate performance of work under this contract in whole or, from time to time, in part if the Contracting Officer determines that a termination is in the Government's interest. The

Contracting Officer shall terminate by delivering to the Contractor a Notice of Termination specifying the extent of termination and the effective date.

(b) After receipt of a Notice of Termination, and except as directed by the Contracting Officer, the Contractor shall immediately proceed with the following obligations, regardless of any delay in determining or adjusting any amounts due under this clause:

(1) Stop work as specified in the notice.

(2) Place no further subcontracts or orders (referred to as subcontracts in this clause) for materials, services, or facilities, except as necessary to complete the continued portion of the contract.

(3) Terminate all subcontracts to the extent they relate to the work terminated.

(4) Assign to the Government, as directed by the Contracting Officer, all right, title, and interest of the Contractor under the subcontracts terminated, in which case the Government shall have the right to settle or to pay any termination settlement proposal arising out of those terminations.

(5) With approval or ratification to the extent required by the Contracting Officer, settle all outstanding liabilities and termination settlement proposals arising from the termination of subcontracts; the approval or ratification will be final for purposes of this clause.

(6) As directed by the Contracting Officer, transfer title and deliver to the Government (i) the fabricated or unfabricated parts, work in process, completed work, supplies, and other material produced or acquired for the work terminated, and (ii) the completed or partially completed plans, drawings, information, and other property that, if the contract had been completed, would be required to be furnished to the Government.

(7) Complete performance of the work not terminated.

(8) Take any action that may be necessary, or that the Contracting Officer may direct, for the protection and preservation of the property related to this contract that is in the possession of the Contractor and in which the Government has or may acquire an interest.

(9) Use its best efforts to sell, as directed or authorized by the Contracting Officer, any property of the types referred to in subparagraph (b)(6) of this clause; provided, however, that the Contractor (i) is not required to extend credit to any purchaser and (ii) may acquire the property under the conditions prescribed by, and at prices approved by, the Contracting Officer. The proceeds of any transfer or disposition will be applied to reduce any payments to be made by the Government under this contract, credited to the price or cost of the work, or paid in any other manner directed by the Contracting Officer.

(c) The Contractor shall submit complete termination inventory schedules no later than 120 days from the effective date of termination, unless extended in writing by the Contracting Officer upon written request of the Contractor within this 120-day period.

(d) After expiration of the plant clearance period as defined in Subpart 49.001 of the Federal Acquisition Regulation, the Contractor may submit to the Contracting Officer a list, certified as to quantity and quality, of termination inventory not previously disposed of, excluding items authorized for disposition by the Contracting Officer. The Contractor may request the Government to remove those items or enter into an agreement for their storage. Within 15 days, the Government will accept title to those items and remove them or enter into a storage agreement. The Contracting Officer may verify the list upon removal of the items, or if stored, within 45 days from submission of the list, and shall correct the list, as necessary, before final settlement.

(e) After termination, the Contractor shall submit a final termination settlement proposal to the Contracting Officer in the form and with the certification prescribed by the Contracting Officer. The Contractor shall submit the proposal promptly, but no later than 1 year from the effective date of termination, unless

extended in writing by the Contracting Officer upon written request of the Contractor within this 1-year period. However, if the Contracting Officer determines that the facts justify it, a termination settlement proposal may be received and acted on after 1 year or any extension. If the Contractor fails to submit the proposal within the time allowed, the Contracting Officer may determine, on the basis of information available, the amount, if any, due the Contractor because of the termination and shall pay the amount determined.

(f) Subject to paragraph (e) of this clause, the Contractor and the Contracting Officer may agree upon the whole or any part of the amount to be paid or remaining to be paid because of the termination. The amount may include a reasonable allowance for profit on work done. However, the agreed amount, whether under this paragraph (g) or paragraph (g) of this clause, exclusive of costs shown in subparagraph (g)(3) of this clause, may not exceed the total contract price as reduced by (1) the amount of payments previously made and (2) the contract price of work not terminated. The contract shall be modified, and the Contractor paid the agreed amount. Paragraph (g) of this clause shall not limit, restrict, or affect the amount that may be agreed upon to be paid under this paragraph.

(g) If the Contractor and the Contracting Officer fail to agree on the whole amount to be paid because of the termination of work, the Contracting Officer shall pay the Contractor the amounts determined by the Contracting Officer as follows, but without duplication of any amounts agreed on under paragraph (f) of this clause:

(1) The contract price for completed supplies or services accepted by the Government (or sold or acquired under subparagraph (b)(9) of this clause) not previously paid for, adjusted for any saving of freight and other charges.

(2) The total of--

(i) The costs incurred in the performance of the work terminated, including initial costs and preparatory expense allocable thereto, but excluding any costs attributable to supplies or services paid or to be paid under subparagraph (f)(1) of this clause;

(ii) The cost of settling and paying termination settlement proposals under terminated subcontracts that are properly chargeable to the terminated portion of the contract if not included in subdivision (g)(2)(i) of this clause; and

(iii) A sum, as profit on subdivision (g)(2)(i) of this clause, determined by the Contracting Officer under 49.202 of the Federal Acquisition Regulation, in effect on the date of this contract, to be fair and reasonable; however, if it appears that the Contractor would have sustained a loss on the entire contract had it been completed, the Contracting Officer shall allow no profit under this subdivision (iii) and shall reduce the settlement to reflect the indicated rate of loss.

(3) The reasonable costs of settlement of the work terminated, including--

(i) Accounting, legal, clerical, and other expenses reasonably necessary for the preparation of termination settlement proposals and supporting data;

(ii) The termination and settlement of subcontracts (excluding the amounts of such settlements); and

(iii) Storage, transportation, and other costs incurred, reasonably necessary for the preservation, protection, or disposition of the termination inventory.

(h) Except for normal spoilage, and except to the extent that the Government expressly assumed the risk of loss, the Contracting Officer shall exclude from the amounts payable to the Contractor under paragraph (g) of this clause, the fair value, as determined by the Contracting Officer, of property that is destroyed, lost, stolen, or damaged so as to become undeliverable to the Government or to a buyer.

(i) The cost principles and procedures of Part 31 of the Federal Acquisition Regulation, in effect on the date of this contract, shall govern all costs claimed, agreed to, or determined under this clause.

(j) The Contractor shall have the right of appeal, under the Disputes clause, from any determination made by the Contracting Officer under paragraph (e), (g), or (l) of this clause, except that if the Contractor failed to submit the termination settlement proposal or request for equitable adjustment within the time provided in paragraph (e) or (l), respectively, and failed to request a time extension, there is no right of appeal.

(k) In arriving at the amount due the Contractor under this clause, there shall be deducted--

(1) All unliquidated advance or other payments to the Contractor under the terminated portion of this contract;

(2) Any claim which the Government has against the Contractor under this contract; and

(3) The agreed price for, or the proceeds of sale of, materials, supplies, or other things acquired by the Contractor or sold under the provisions of this clause and not recovered by or credited to the Government.

(l) If the termination is partial, the Contractor may file a proposal with the Contracting Officer for an equitable adjustment of the price(s) of the continued portion of the contract. The Contracting Officer shall make any equitable adjustment agreed upon. Any proposal by the Contractor for an equitable adjustment under this clause shall be requested within 90 days from the effective date of termination unless extended in writing by the Contracting Officer.

(m)(1) The Government may, under the terms and conditions it prescribes, make partial payments and payments against costs incurred by the Contractor for the terminated portion of the contract, if the Contracting Officer believes the total of these payments will not exceed the amount to which the Contractor will be entitled.

(2) If the total payments exceed the amount finally determined to be due, the Contractor shall repay the excess to the Government upon demand, together with interest computed at the rate established by the Secretary of the Treasury under 50 U.S.C. App. 1215(b)(2). Interest shall be computed for the period from the date the excess payment is received by the Contractor to the date the excess is repaid. Interest shall not be charged on any excess payment due to a reduction in the Contractor's termination settlement proposal because of retention or other disposition of termination inventory until 10 days after the date of the retention or disposition, or a later date determined by the Contracting Officer because of the circumstances.

(n) Unless otherwise provided in this contract or by statute, the Contractor shall maintain all records and documents relating to the terminated portion of this contract for 3 years after final settlement. This includes all books and other evidence bearing on the Contractor's costs and expenses under this contract. The Contractor shall make these records and documents available to the Government, at the Contractor's office, at all reasonable times, without any direct charge. If approved by the Contracting Officer, photographs, microphotographs, or other authentic reproductions may be maintained instead of original records and documents.

(End of clause)

52.249-10 DEFAULT (FIXED-PRICE CONSTRUCTION) (APR 1984)

(a) If the Contractor refuses or fails to prosecute the work or any separable part, with the diligence that will insure its completion within the time specified in this contract including any extension, or fails to complete the work within this time, the Government may, by written notice to the Contractor, terminate the right to proceed with the work (or the separable part of the work) that has been delayed. In this event, the Government may take over the work and complete it by contract or otherwise, and may take possession of and use any materials, appliances, and plant on the work site necessary for completing the work. The Contractor and its sureties shall be liable for any damage to the Government resulting from the Contractor's

refusal or failure to complete the work within the specified time, whether or not the Contractor's right to proceed with the work is terminated. This liability includes any increased costs incurred by the Government in completing the work.

(b) The Contractor's right to proceed shall not be terminated nor the Contractor charged with damages under this clause, if--

(1) The delay in completing the work arises from unforeseeable causes beyond the control and without the fault or negligence of the Contractor. Examples of such causes include

(i) acts of God or of the public enemy,

(ii) acts of the Government in either its sovereign or contractual capacity,

(iii) acts of another Contractor in the performance of a contract with the Government,

(iv) fires,

(v) floods,

(vi) epidemics,

(vii) quarantine restrictions,

(viii) strikes,

(ix) freight embargoes,

(x) unusually severe weather, or delays of subcontractors or suppliers at any tier arising from unforeseeable causes beyond the control and without the fault or negligence of both the Contractor and the subcontractors or suppliers; and

(2) The Contractor, within 10 days from the beginning of any delay (unless extended by the Contracting Officer), notifies the Contracting Officer in writing of the causes of delay. The Contracting Officer shall ascertain the facts and the extent of delay. If, in the judgment of the Contracting Officer, the findings of fact warrant such action, the time for completing the work shall be extended. The findings of the Contracting Officer shall be final and conclusive on the parties, but subject to appeal under the Disputes clause.

(c) If, after termination of the Contractor's right to proceed, it is determined that the Contractor was not in default, or that the delay was excusable, the rights and obligations of the parties will be the same as if the termination had been issued for the convenience of the Government.

The rights and remedies of the Government in this clause are in addition to any other rights and remedies provided by law or under this contract.

(End of clause)

52.252-2 CLAUSES INCORPORATED BY REFERENCE (FEB 1998)

This contract incorporates one or more clauses by reference, with the same force and effect as if they were given in full text. Upon request, the Contracting Officer will make their full text available. Also, the full text of a clause may be accessed electronically at this/these address(es):

http://www.arnet.gov/far/

http://www.acq.osd.mil/dpap/dfars/index.htm

(End of clause)

52.252-3 ALTERATIONS IN SOLICITATION (APR 1984)

Portions of this solicitation are altered as follows:

52.252-4 ALTERATIONS IN CONTRACT (APR 1984)

Portions of this contract are altered as follows:

(End of clause)

52.252-6 AUTHORIZED DEVIATIONS IN CLAUSES (APR 1984)

(a) The use in this solicitation or contract of any Federal Acquisition Regulation (48 CFR Chapter 1) clause with an authorized deviation is indicated by the addition of "(DEVIATION)" after the date of the clause.

(b) The use in this solicitation or contract of any _insert regulation name____ (48 CFR _____) clause with an authorized deviation is indicated by the addition of "(DEVIATION)" after the name of the regulation.

(End of clause)

52.253-1 COMPUTER GENERATED FORMS (JAN 1991)

(a) Any data required to be submitted on a Standard or Optional Form prescribed by the Federal Acquisition Regulation (FAR) may be submitted on a computer generated version of the form, provided there is no change to the name, content, or sequence of the data elements on the form, and provided the form carries the Standard or Optional Form number and edition date.

(b) Unless prohibited by agency regulations, any data required to be submitted on an agency unique form prescribed by an agency supplement to the FAR may be submitted on a computer generated version of the form provided there is no change to the name, content, or sequence of the data elements on the form and provided the form carries the agency form number and edition date.

(g) If the Contractor submits a computer generated version of a form that is different than the required form, then the rights and obligations of the parties will be determined based on the content of the required form.
(End of clause)

252.201-7000 CONTRACTING OFFICER'S REPRESENTATIVE (DEC 1991)

(a) "Definition. Contracting officer's representative" means an individual designated in accordance with subsection 201.602-2 of the Defense Federal Acquisition Regulation Supplement and authorized in writing by the contracting officer to perform specific technical or administrative functions.

(b) If the Contracting Officer designates a contracting officer's representative (COR), the Contractor will receive a copy of the written designation. It will specify the extent of the COR's authority to act on behalf of the contracting officer. The COR is not authorized to make any commitments or changes that will affect price, quality, quantity, delivery, or any other term or condition of the contract.
(End of clause)

252.203-7001 PROHIBITION ON PERSONS CONVICTED OF FRAUD OR OTHER DEFENSE-CONTRACT-RELATED FELONIES (DEC 2004)

(a) Definitions. As used in this clause—

(1) "Arising out of a contract with the DoD" means any act in connection with—

(i) Attempting to obtain;

(ii) Obtaining, or

(iii) Performing a contract or first-tier subcontract of any agency, department, or component of the Department of Defense (DoD).

(2) "Conviction of fraud or any other felony" means any conviction for fraud or a felony in violation of state or Federal criminal statutes, whether entered on a verdict or plea, including a plea of nolo contendere, for which sentence has been imposed.

(3) "Date of conviction" means the date judgment was entered against the individual.

(b) Any individual who is convicted after September 29, 1988, of fraud or any other felony arising out of a contract with the DoD is prohibited from serving--

(1) In a management or supervisory capacity on this contract;

(2) On the board of directors of the Contractor;

(3) As a consultant, agent, or representative for the Contractor; or

(4) In any other capacity with the authority to influence, advise, or control the decisions of the Contractor with regard to this contract.

(c) Unless waived, the prohibition in paragraph (b) of this clause applies for not less than 5 years from the date of conviction.

(d) 10 U.S.C. 2408 provides that the Contractor shall be subject to a criminal penalty of not more than $500,000 if convicted of knowingly--

(1) Employing a person under a prohibition specified in paragraph (b) of this clause; or

(2) Allowing such a person to serve on the board of directors of the contractor or first-tier subcontractor.

(e) In addition to the criminal penalties contained in 10 U.S.C. 2408, the Government may consider other available remedies, such as—

(1) Suspension or debarment;

(2) Cancellation of the contract at no cost to the Government; or

(3) Termination of the contract for default.

(f) The Contractor may submit written requests for waiver of the prohibition in paragraph (b) of this clause to the Contracting Officer. Requests shall clearly identify—

(1) The person involved;

(2) The nature of the conviction and resultant sentence or punishment imposed;

(3) The reasons for the requested waiver; and

(4) An explanation of why a waiver is in the interest of national security.

(g) The Contractor agrees to include the substance of this clause, appropriately modified to reflect the identity and relationship of the parties, in all first-tier subcontracts exceeding the simplified acquisition threshold in Part 2 of the Federal Acquisition Regulation, except those for commercial items or components.

(h) Pursuant to 10 U.S.C. 2408(c), defense contractors and subcontractors may obtain information as to whether a particular person has been convicted of fraud or any other felony arising out of a contract with the DoD by contacting The Office of Justice Programs, The Denial of Federal Benefits Office, U.S. Department of Justice, telephone (301) 809-4904.

(End of clause)

252.203-7002 DISPLAY OF DOD HOTLINE POSTER (DEC 1991)

(a) The Contractor shall display prominently in common work areas within business segments performing work under Department of Defense (DoD) contracts, DoD Hotline Posters prepared by the DoD Office of the Inspector General.

(b) DoD Hotline Posters may be obtained from the DoD Inspector General, ATTN: Defense Hotline, 400 Army Navy Drive, Washington, DC 22202-2884.

(h) The Contractor need not comply with paragraph (a) of this clause if it has established a mechanism, such as a hotline, by which employees may report suspected instances of improper conduct, and instructions that encourage employees to make such reports.

(End of clause)

252.204-7000 DISCLOSURE OF INFORMATION (DEC 1991)

(a) The Contractor shall not release to anyone outside the Contractor's organization any unclassified information, regardless of medium (e.g., film, tape, document), pertaining to any part of this contract or any program related to this contract, unless--

(1) The Contracting Officer has given prior written approval; or

(2) The information is otherwise in the public domain before the date of release.

(b) Requests for approval shall identify the specific information to be released, the medium to be used, and the purpose for the release. The Contractor shall submit its request to the Contracting Officer at least 45 days before the proposed date for release.

(c) The Contractor agrees to include a similar requirement in each subcontract under this contract. Subcontractors shall submit requests for authorization to release through the prime contractor to the Contracting Officer.

(End of clause)

252.204-7003 CONTROL OF GOVERNMENT PERSONNEL WORK PRODUCT (APR 1992)

The Contractor's procedures for protecting against unauthorized disclosure of information shall not require Department of Defense employees or members of the Armed Forces to relinquish control of their work products, whether classified or not, to the contractor.

(End of clause)

252.205-7000 PROVISION OF INFORMATION TO COOPERATIVE AGREEMENT HOLDERS (DEC 1991)

(a) Definition.

"Cooperative agreement holder" means a State or local government; a private, nonprofit organization; a tribal organization (as defined in section 4(c) of the Indian Self-Determination and Education Assistance Act (Pub. L. 93-268; 25 U.S.C. 450 (c))); or an economic enterprise (as defined in section 3(e) of the Indian Financing Act of 1974 (Pub. L. 93-362; 25 U.S.C. 1452(e))) whether such economic enterprise is organized for profit or nonprofit purposes; which has an agreement with the Defense Logistics Agency to furnish procurement technical assistance to business entities.

(b) The Contractor shall provide cooperative agreement holders, upon their request, with a list of those appropriate employees or offices responsible for entering into subcontracts under defense contracts. The list shall include the business address, telephone number, and area of responsibility of each employee or office.

(c) The Contractor need not provide the listing to a particular cooperative agreement holder more frequently than once a year.

(End of clause)

252.209-7004 SUBCONTRACTING WITH FIRMS THAT ARE OWNED OR CONTROLLED BY THE GOVERNMENT OF A TERRORIST COUNTRY (MAR 1998)

(a) Unless the Government determines that there is a compelling reason to do so, the Contractor shall not enter into any subcontract in excess of $25,000 with a firm, or subsidiary of a firm, that is identified, on the List of Parties Excluded from Federal Procurement and Nonprocurement Programs, as being ineligible for the award of Defense contracts or subcontracts because it is owned or controlled by the government of a terrorist country.

(b) A corporate officer or a designee of the Contractor shall notify the Contracting Officer, in writing, before entering into a subcontract with a party that is identified, on the List of Parties Excluded from Federal Procurement and Nonprocurement Programs, as being ineligible for the award of Defense contracts or subcontracts because it is owned or controlled by the government of a terrorist country. The notice must include the name of the proposed subcontractor notwithstanding its inclusion on the List of Parties Excluded From Federal Procurement and Nonprocurement Programs.

(End of clause)

252.219-7003 SMALL, SMALL DISADVANTAGED AND WOMEN-OWNED SMALL BUSINESS SUBCONTRACTING PLAN (DOD CONTRACTS) (APR. 1996)

This clause supplements the Federal Acquisition Regulation 52.219-9, Small, Small Disadvantaged and Women-Owned Small Business Subcontracting Plan, clause of this contract.

(a) *Definitions. Historically black colleges and universities,* as used in this clause, means institutions determined by the Secretary of Education to meet the requirements of 34 CFR 608.2. The term also means

any nonprofit research institution that was an integral part of such a college or university before November 14, 1986.

Minority institutions, as used in this clause, means institutions meeting the requirements of section 1046(3) of the Higher Education Act of 1965 (20 U.S.C. 1135d-5(3)). The term also includes Hispanic-serving institutions as defined in section 316(b)(1) of such Act (20 U.S.C. 1059c(b)(1)).

(b) Except for company or division-wide commercial items subcontracting plans, the term *small disadvantaged business,* when used in the FAR 52.219-9 clause, includes historically black colleges and universities and minority institutions, in addition to small disadvantaged business concerns.

(c) Work under the contract or its subcontracts shall be credited toward meeting the small disadvantaged business concern goal required by paragraph (d) of the FAR 52.219-9 clause when:

(1) It is performed on Indian lands or in joint venture with an Indian tribe or a tribally-owned corporation, and

(2) It meets the requirements of 10 U.S.C. 2323a.

(d) Subcontracts awarded to workshops approved by the Committee for Purchase from People Who are Blind or Severely Disabled (41 U.S.C. 46-48), may be counted toward the Contractor's small business subcontracting goal.

(e) A mentor firm, under the Pilot Mentor-Protege Program established under Section 831 of Pub. L. 101-510, as amended, may count toward its small disadvantaged business goal, subcontracts awarded--

(f) The master plan approval referred to in paragraph (f) of the FAR 52.219-9 clause is approval by the Contractor's cognizant contract administration activity.

(g) In those subcontracting plans which specifically identify small, small disadvantaged, and women-owned small businesses, the Contractor shall notify the Administrative Contracting Officer of any substitutions of firms that are not small, small disadvantaged, or women-owned small businesses for the firms listed in the subcontracting plan. Notifications shall be in writing and shall occur within a reasonable period of time after award of the subcontract. Contractor-specified formats shall be acceptable.

(End of clause)

252.223-7006 PROHIBITION ON STORAGE AND DISPOSAL OF TOXIC AND HAZARDOUS MATERIALS (APR 1993)

(a) "Definitions".

As used in this clause --

(1) "Storage" means a non-transitory, semi-permanent or permanent holding, placement, or leaving of material. It does not include a temporary accumulation of a limited quantity of a material used in or a waste generated or resulting from authorized activities, such as servicing, maintenance, or repair of Department of Defense (DoD) items, equipment, or facilities.

(2) "Toxic or hazardous materials" means:

(i) Materials referred to in section 101(14) of the Comprehensive Environmental Response, Compensation, and Liability Act (CERCLA) of 1980 (42 U.S.C. 9601(14)) and materials designated under section 102 of CERCLA (42 U.S.C. 9602) (40 CFR part 302);

(ii) Materials that are of an explosive, flammable, or pyrotechnic nature; or

(iii) Materials otherwise identified by the Secretary of Defense as specified in DoD regulations.

(b) In accordance with 10 U.S.C. 2692, the Contractor is prohibited from storing or disposing of non-DoD-owned toxic or hazardous materials on a DoD installation, except to the extent authorized by a statutory exception to 10 U.S.C. 2692 or as authorized by the Secretary of Defense or his designee.

(End of clause)

252.225-7012 Preference for Certain Domestic Commodities (JUN 2004)

(a) Definitions. As used in this clause--

(1) Component means any item supplied to the Government as part of an end product or of another component.

(2) End product means supplies delivered under a line item of this contract.

(3) United States means the 50 States, the District of Columbia, and outlying areas.

(4) U.S.-flag vessel means a vessel of the United States or belonging to the United States, including any vessel registered or having national status under the laws of the United States.

(b) The Contractor shall deliver under this contract only such of the following items, either as end products or components, that have been grown, reprocessed, reused, or produced in the United States:

(1) Food.

(2) Clothing.

(3) Tents, tarpaulins, or covers.

(4) Cotton and other natural fiber products.

(5) Woven silk or woven silk blends.

(6) Spun silk yarn for cartridge cloth.

(7) Synthetic fabric, and coated synthetic fabric, including all textile fibers and yarns that are for use in such fabrics.

(8) Canvas products.

(9) Wool (whether in the form of fiber or yarn or contained in fabrics, materials, or manufactured articles).

(10) Any item of individual equipment (Federal Supply Class 8465) manufactured from or containing fibers, yarns, fabrics, or materials listed in this paragraph (b).

(c) This clause does not apply--

(1) To items listed in section 25.104(a) of the Federal Acquisition Regulation (FAR), or other items for which the Government has determined that a satisfactory quality and sufficient quantity cannot be acquired as and when needed at U.S. market prices;

(2) To end products incidentally incorporating cotton, other natural fibers, or wool, for which the estimated value of the cotton, other natural fibers, or wool--

(i) Is not more than 10 percent of the total price of the end product; and (ii) Does not exceed the simplified acquisition threshold in FAR part 2;

(3) To waste and byproducts of cotton or wool fiber for use in the production of propellants and explosives;

(4) To foods, other than fish, shellfish, or seafood, that have been manufactured or processed in the United States, regardless of where the foods (and any component if applicable) were grown or produced. Fish, shellfish, or seafood manufactured or processed in the United States and fish, shellfish, or seafood contained in foods manufactured or processed in the United States shall be provided in accordance with paragraph (d) of this clause;

(5) To chemical warfare protective clothing produced in the countries listed in subsection 225.872-1 of the Defense FAR Supplement; or

(6) To fibers and yarns that are for use in synthetic fabric or coated synthetic fabric (but does apply to the synthetic or coated synthetic fabric itself), if--

(i) The fabric is to be used as a component of an end product that is not a textile product. Examples of textile products, made in whole or in part of fabric, include--

(A) Draperies, floor coverings, furnishings, and bedding (Federal Supply Group 72, Household and Commercial Furnishings and Appliances);

(B) Items made in whole or in part of fabric in Federal Supply Group 83, Textile/leather/furs/apparel/findings/ tents/flags, or Federal Supply Group 84, Clothing, Individual Equipment and Insignia;

(C) Upholstered seats (whether for household, office, or other use); and

(D) Parachutes (Federal Supply Class 1670); or

(ii) The fibers and yarns are para-aramid fibers and yarns manufactured in the Netherlands.

(d)(1) Fish, shellfish, and seafood delivered under this contract, or contained in foods delivered under this contract--

(i) Shall be taken from the sea by U.S.-flag vessels; or

(ii) If not taken from the sea, shall be obtained from fishing within the United States; and

(2) Any processing or manufacturing of the fish, shellfish, or seafood shall be performed on a U.S.-flag vessel or in the United States.

(End of clause)

252.225-7031 SECONDARY ARAB BOYCOTT OF ISRAEL (APR 2003)

(a) Definitions. As used in this provision--

(1) Foreign person means any person (including any individual, partnership, corporation, or other form of association) other than a United States person.

(2) United States person is defined in 50 U.S.C. App. 2415(2) and means--

(i) Any United States resident or national (other than an individual resident outside the United States who is employed by other than a United States person);

(ii) Any domestic concern (including any permanent domestic establishment of any foreign concern); and

(iii) Any foreign subsidiary or affiliate (including any permanent foreign establishment) of any domestic concern that is controlled in fact by such domestic concern.

(b) Certification. If the offeror is a foreign person, the offeror certifies, by submission of an offer, that it--

(1) Does not comply with the Secondary Arab Boycott of Israel; and

(2) Is not taking or knowingly agreeing to take any action, with respect to the Secondary Boycott of Israel by Arab countries, which 50 U.S.C. App. 2407(a) prohibits a United States person from taking.

(End of provision)

252.227-7000 Non-estoppel. (OCT 1966)

The Government reserves the right at any time to contest the enforceability, validity, scope of, or the title to any patent or patent application herein licensed without waiving or forfeiting any right under this contract.

(End of clause)

252.227-7022 GOVERNMENT RIGHTS (UNLIMITED) (MAR 1979)

The Government shall have unlimited rights, in all drawings, designs, specifications, notes and other works developed in the performance of this contract, including the right to use same on any other Government design or construction without additional compensation to the Contractor. The Contractor hereby grants to the Government a paid-up license throughout the world to all such works to which he may assert or establish any claim under design patent or copyright laws. The Contractor for a period of three (3) years after completion of the project agrees to furnish the original or copies of all such works on the request of the Contracting Officer.

(End of clause)

252.227-7023 DRAWINGS AND OTHER DATA TO BECOME PROPERTY OF GOVERNMENT. (MAR 1979)

All designs, drawings, specifications, notes and other works developed in the performance of this contract shall become the sole property of the Government and may be used on any other design or construction without additional compensation to the Contractor. The Government shall be considered the "person for whom the work was prepared" for the purpose of authorship in any copyrightable work under 17 U.S.C. 201(b). With respect thereto, the Contractor agrees not to assert or authorize others to assert any rights nor establish any claim under the design patent or copyright laws. The Contractor for a period of three (3) years after completion of the project agrees to furnish all retained works on the request of the Contracting Officer. Unless otherwise provided in this contract, the Contractor shall have the right to retain copies of all works beyond such period.

(End of clause)

252.227-7033 RIGHTS IN SHOP DRAWINGS (APR 1966)

(a) Shop drawings for construction means drawings, submitted to the Government by the Construction Contractor, subcontractor or any lower-tier subcontractor pursuant to a construction contract, showing in detail (i) the proposed fabrication and assembly of structural elements and (ii) the installation (i.e., form, fit,

and attachment details) of materials or equipment. The Government may duplicate, use, and disclose in any manner and for any purpose shop drawings delivered under this contract.

(b) This clause, including this paragraph (b), shall be included in all subcontracts hereunder at any tier.

252.231-7000 SUPPLEMENTAL COST PRINCIPLES (DEC 1991)

When the allowability of costs under this contract is determined in accordance with part 31 of the Federal Acquisition Regulation (FAR), allowability shall also be determined in accordance with part 231 of the Defense FAR Supplement, in effect on the date of this contract.

(End of clause)

252.236-7000 MODIFICATION PROPOSALS - PRICE BREAKDOWN. (DEC 1991)

(a) The Contractor shall furnish a price breakdown, itemized as required and within the time specified by the Contracting Officer, with any proposal for a contract modification.

(b) The price breakdown --

(1) Must include sufficient detail to permit an analysis of profit, and of all costs for --

(i) Material;

(ii) Labor;

(iii) Equipment;

(iv) Subcontracts; and

(v) Overhead; and

(2) Must cover all work involved in the modification, whether the work was deleted, added, or changed.

(c) The Contractor shall provide similar price breakdowns to support any amounts claimed for subcontracts.

(d) The Contractor's proposal shall include a justification for any time extension proposed.

252.236-7008 CONTRACT PRICES - BIDDING SCHEDULES. (DEC 1991)

(a) The Government's payment for the items listed in the Bidding Schedule shall constitute full compensation to the Contractor for --

(1) Furnishing all plant, labor, equipment, appliances, and materials; and

(2) Performing all operations required to complete the work in conformity with the drawings and specifications.

(b) The Contractor shall include in the prices for the items listed in the Bidding Schedule all costs for work in the specifications, whether or not specifically listed in the Bidding Schedule.

252.242-7000 POSTAWARD CONFERENCE (DEC 1991)

The Contractor agrees to attend any postaward conference convened by the contracting activity or contract administration office in accordance with Federal Acquisition Regulation subpart 42.5.

252.243-7001 PRICING OF CONTRACT MODIFICATIONS (DEC 1991)

When costs are a factor in any price adjustment under this contract, the contract cost principles and procedures in FAR part 31 and DFARS part 231, in effect on the date of this contract, apply.

252.243-7002 REQUESTS FOR EQUITABLE ADJUSTMENT (MAR 1998)

(a) The amount of any request for equitable adjustment to contract terms shall accurately reflect the contract adjustment for which the Contractor believes the Government is liable. The request shall include only costs for performing the change, and shall not include any costs that already have been reimbursed or that have been separately claimed. All indirect costs included in the request shall be properly allocable to the change in accordance with applicable acquisition regulations.

(b) In accordance with 10 U.S.C. 2410(a), any request for equitable adjustment to contract terms that exceeds the simplified acquisition threshold shall bear, at the time of submission, the following certificate executed by an individual authorized to certify the request on behalf of the Contractor:

I certify that the request is made in good faith, and that the supporting data are accurate and complete to the best of my knowledge and belief.

(Official's Name)

(Title)

(c) The certification in paragraph (b) of this clause requires full disclosure of all relevant facts, including--

(1) Cost or pricing data if required in accordance with subsection 15.403-4 of the Federal Acquisition Regulation (FAR); and

(2) Information other than cost or pricing data, in accordance with subsection 15.403-3 of the FAR, including actual cost data and data to support any estimated costs, even if cost or pricing data are not required.

(d) The certification requirement in paragraph (b) of this clause does not apply to----

(1) Requests for routine contract payments; for example, requests for payment for accepted supplies and services, routine vouchers under a cost-reimbursement type contract, or progress payment invoices; or

(2) Final adjustment under an incentive provision of the contract.

252.247-7024 Notification of Transportation of Supplies by Sea (MAR 2000)

(a) The Contractor has indicated by the response to the solicitation provision, Representation of Extent of Transportation by Sea, that it did not anticipate transporting by sea any supplies. If, however, after the award of this contract, the Contractor learns that supplies, as defined in the Transportation of Supplies by Sea clause of this contract, will be transported by sea, the Contractor --

(1) Shall notify the Contracting Officer of that fact; and

(2) Hereby agrees to comply with all the terms and conditions of the Transportation of Supplies by Sea clause of this contract.

(b) The Contractor shall include this clause; including this paragraph (b), revised as necessary to reflect the relationship of the contracting parties--

(1) In all subcontracts under this contract, if this contract is a construction contract; or

(2) If this contract is not a construction contract, in all subcontracts under this contract that are for--

(i) Noncommercial items; or

(ii) Commercial items that--

(A) The Contractor is reselling or distributing to the Government without adding value (generally, the Contractor does not add value to items that it subcontracts for f.o.b. destination shipment);

(B) Are shipped in direct support of U.S. military contingency operations, exercises, or forces deployed in humanitarian or peacekeeping operations; or

(C) Are commissary or exchange cargoes transported outside of the Defense Transportation System in accordance with 10 U.S.C. 2643.

(End of clause)

Section 00800
Special Contract Requirements

52.0001-4001 CONTRACT ADMINISTRATION DATA 2
52.211-10 COMMENCEMENT, PROSECUTION, AND COMPLETION OF WORK (APR 1984)....2
52.211-12 LIQUIDATED DAMAGES--CONSTRUCTION (SEP 2000) 3
52.211-18 VARIATION IN ESTIMATED QUANTITY (APR 1984) 3
52.211-5001 VARIATIONS IN ESTIMATED QUANTITIES, SUBDIVIDED ITEMS (MAR 1995)—EFARS 3
52.228-12 Prospective Subcontractor Requests for Bonds. (OCT 1995) 3
52.228-14 IRREVOCABLE LETTER OF CREDIT (DEC 1999) 4
52.228-15 Performance and Payment Bonds--Construction (JUL 2000) 7
52.231-5000 EQUIPMENT OWNERSHIP AND OPERATING EXPENSE SCHEDULE MAR 1995)—EFARS 8
52.232-33 PAYMENT BY ELECTRONIC FUNDS TRANSFER—CENTRAL CONTRACTOR REGISTRATION (OCT 2003) 8
52.232-4001 CONTINUING CONTRACTS (ALTERNATE) (MAR 1995) EFARS 52-232-5002 10
52.236-1 PERFORMANCE OF WORK BY THE CONTRACTOR (APR 1984) 10
52.236-4 PHYSICAL DATA (APR 1984) 11
52.236-16 QUANTITY SURVEYS (APR 1984) 11
52.236-21 SPECIFICATIONS AND DRAWINGS FOR CONSTRUCTION (FEB 1997) 11
52.236-5000 PLANT AND MATERIAL REMOVAL AFTER CONTRACT TERMINATION (MAR 1995)—EFARS 12
52.249-5000 BASIS FOR SETTLEMENT OF PROPOSALS 12
252.236-7001 CONTRACT DRAWINGS, MAPS, AND SPECIFICATIONS (AUG 2000) 14
52.236-7002 OBSTRUCTION OF NAVIGABLE WATERWAYS. (DEC 1991) 14
252.236-7004 PAYMENT FOR MOBILIZATION AND DEMOBILIZATION (DEC 1991) 15
252.247-7023 Transportation of Supplies by Sea (MAY 2002) 15

CLAUSES INCORPORATED BY FULL TEXT

52.0001-4001 CONTRACT ADMINISTRATION DATA

The Contract Administration Office for this contract subsequent to award is:

Department of the Army
Los Angeles District, Corps of Engineers
P.O. Box 532711
Los Angeles, California 90053-2325

ATTN: Mary Ann Powers

Telephone No: (213) 452-3254

Payment will be made by:

USACE Finance Center
ATTN: CEFC-AO-P
5270 Integrity Drive
Millington, TN 38054-5005

Submit Invoices to:

Refer to Block No. 26 of the Standard Form 1442, "Solicitation, Offer and Award" which will be completed at the time of contract award

52.211-10 COMMENCEMENT, PROSECUTION, AND COMPLETION OF WORK (APR 1984)

The Contractor shall be required to

(a) provide payment and performance bonds within 10 days after award of the contract,

(b) commence work under this contract within 10 calendar days after the date the Contractor receives the Notice to Proceed,

(c) prosecute the work diligently, and

(d) complete the entire Base Bid work ready for use not later than 70 calendar days after receipt of Notice to Proceed. The time stated for completion shall include final cleanup of the premises.

(e) If exercised, the Second Year Cycle of dredging shall be completed within 70 calendar days after receipt of SF 30 "Modification of Contract." The time stated for completion shall include final cleanup of the premises.

(f) If exercised, the Third Year Cycle of dredging shall be completed within 70 calendar days after receipt of SF 30 "Modification of Contract." The time stated for completion shall include final cleanup of the premises.

(End of clause)

52.211-12 LIQUIDATED DAMAGES--CONSTRUCTION (SEP 2000)

(a) If the Contractor fails to complete the work within the time specified in the contract, the Contractor shall pay liquidated damages to the Government in the amount of $1,060.00 for each calendar day of delay until the work is completed or accepted.

(b) If the Government terminates the Contractor's right to proceed, liquidated damages will continue to accrue until the work is completed. These liquidated damages are in addition to excess costs of repurchase under the Termination clause.

(End of clause)

52.211-18 VARIATION IN ESTIMATED QUANTITY (APR 1984)

If the quantity of a unit-priced item in this contract is an estimated quantity and the actual quantity of the unit-priced item varies more than 15 percent above or below the estimated quantity, an equitable adjustment in the contract price shall be made upon demand of either party. The equitable adjustment shall be based upon any increase or decrease in costs due solely to the variation above 115 percent or below 85 percent of the estimated quantity. If the quantity variation is such as to cause an increase in the time necessary for completion, the Contractor may request, in writing, an extension of time, to be received by the Contracting Officer within 10 days from the beginning of the delay, or within such further period as may be granted by the Contracting Officer before the date of final settlement of the contract. Upon the receipt of a written request for an extension, the Contracting Officer shall ascertain the facts and make an adjustment for extending the completion date as, in the judgement of the Contracting Officer, is justified.

52.211-5001 VARIATIONS IN ESTIMATED QUANTITIES, SUBDIVIDED ITEMS (MAR 1995)—EFARS

This variation in estimated quantities clause is applicable only to Items Nos._0002A, 0002B, 0004A, 0004B, 0006A, and 0006B.

(a) Variation from the estimated quantity in the actual work performed under any second or subsequent sub-item or elimination of all work under such a second or subsequent sub-item will not be the basis for an adjustment in contract unit price.

(b) Where the actual quantity of work performed for Items Nos. 0002A, 0004A, and 0006A is less than 85% of the quantity of the first sub-item listed under such item, the contractor will be paid at the contract unit price for that sub-item for the actual quantity of work performed and, in addition, an equitable adjustment shall be made in accordance with the clause FAR 52.212-11, Variation in Estimated Quantities.

(c) If the actual quantity of work performed under Items Nos. _0002A, 0004A, and 0006A exceeds 115% or is less than 85% of the total estimated quantity of the sub-item under that item and/or if the quantity of the work performed under the second sub-item or any subsequent sub-item under Items Nos. 0002B, 000$B, and 0006B exceeds 115% or is less than 85% of the estimated quantity of any such sub-item, and if such variation causes an increase or a decrease in the time required for performance of this contract the contract completion time will be adjusted in accordance with the clause FAR 52.211-18, Variation in Estimated Quantities.

(End of clause)

52.228-12 Prospective Subcontractor Requests for Bonds. (OCT 1995)

In accordance with Section 806(a)(3) of Pub. L. 102-190, as amended by Sections 2091 and 8105 of Pub. L. 103-355, upon the request of a prospective subcontractor or supplier offering to furnish labor or material for the performance of this contract for which a payment bond has been furnished to the Government pursuant to the Miller Act, the Contractor shall promptly provide a copy of such payment bond to the requester.

(End of clause)

52.228-14 IRREVOCABLE LETTER OF CREDIT (DEC 1999)

(a) “Irrevocable letter of credit” (ILC), as used in this clause, means a written commitment by a federally insured financial institution to pay all or part of a stated amount of money, until the expiration date of the letter, upon presentation by the Government (the beneficiary) of a written demand therefor. Neither the financial institution nor the offeror/Contractor can revoke or condition the letter of credit.

(b) If the offeror intends to use an ILC in lieu of a bid bond, or to secure other types of bonds such as performance and payment bonds, the letter of credit and letter of confirmation formats in paragraphs (e) and (f) of this clause shall be used.

(c) The letter of credit shall be irrevocable, shall require presentation of no document other than a written demand and the ILC (including confirming letter, if any), shall be issued/confirmed by an acceptable federally insured financial institution as provided in paragraph (d) of this clause, and--

(1) If used as a bid guarantee, the ILC shall expire no earlier than 60 days after the close of the bid acceptance period;

(2) If used as an alternative to corporate or individual sureties as security for a performance or payment bond, the offeror/Contractor may submit an ILC with an initial expiration date estimated to cover the entire period for which financial security is required or may submit an ILC with an initial expiration date that is a minimum period of one year from the date of issuance. The ILC shall provide that, unless the issuer provides the beneficiary written notice of non-renewal at least 60 days in advance of the current expiration date, the ILC is automatically extended without amendment for one year from the expiration date, or any future expiration date, until the period of required coverage is completed and the Contracting Officer provides the financial institution with a written statement waiving the right to payment. The period of required coverage shall be:

(i) For contracts subject to the Miller Act, the later of--

(A) One year following the expected date of final payment;

(B) For performance bonds only, until completion of any warranty period; or

(C) For payment bonds only, until resolution of all claims filed against the payment bond during the one-year period following final payment.

(ii) For contracts not subject to the Miller Act, the later of--

(A) 90 days following final payment; or

(B) For performance bonds only, until completion of any warranty period.

(d) Only federally insured financial institutions rated investment grade or higher shall issue or confirm the ILC. The offeror/Contractor shall provide the Contracting Officer a credit rating that indicates the financial institution has the required rating(s) as of the date of issuance of the ILC. Unless the financial institution issuing the ILC had letter of credit business of less than $25 million in the past year, ILCs over $5 million must be confirmed by another acceptable financial institution that had letter of credit business of less than $25 million in the past year.

(e) The following format shall be used by the issuing financial institution to create an ILC:

_____

[Issuing Financial Institution's Letterhead or Name and Address]

Issue Date _____

IRREVOCABLE LETTER OF CREDIT NO. _____

Account party's name _____

Account party's address _____

For Solicitation No. _____(for reference only)

TO: [U.S. Government agency]

[U.S. Government agency's address]

1. We hereby establish this irrevocable and transferable Letter of Credit in your favor for one or more drawings up to United States $_____. This Letter of Credit is payable at [issuing financial institution's and, if any, confirming financial institution's] office at [issuing financial institution's address and, if any, confirming financial institution's address] and expires with our close of business on _____, or any automatically extended expiration date.

2. We hereby undertake to honor your or the transferee's sight draft(s) drawn on the issuing or, if any, the confirming financial institution, for all or any part of this credit if presented with this Letter of Credit and confirmation, if any, at the office specified in paragraph 1 of this Letter of Credit on or before the expiration date or any automatically extended expiration date.

3. [This paragraph is omitted if used as a bid guarantee, and subsequent paragraphs are renumbered.] It is a condition of this Letter of Credit that it is deemed to be automatically extended without amendment for one year from the expiration date hereof, or any future expiration date, unless at least 60 days prior to any expiration date, we notify you or the transferee by registered mail, or other receipted means of delivery, that we elect not to consider this Letter of Credit renewed for any such additional period. At the time we notify you, we also agree to notify the account party (and confirming financial institution, if any) by the same means of delivery.

4. This Letter of Credit is transferable. Transfers and assignments of proceeds are to be effected without charge to either the beneficiary or the transferee/assignee of proceeds. Such transfer or assignment shall be only at the written direction of the Government (the beneficiary) in a form satisfactory to the issuing financial institution and the confirming financial institution, if any.

5. This Letter of Credit is subject to the Uniform Customs and Practice (UCP) for Documentary Credits, 1993 Revision, International Chamber of Commerce Publication No. 500, and to the extent not inconsistent therewith, to the laws of _____ [state of confirming financial institution, if any, otherwise state of issuing financial institution].

6. If this credit expires during an interruption of business of this financial institution as described in Article 17 of the UCP, the financial institution specifically agrees to effect payment if this credit is drawn against within 30 days after the resumption of our business.

Sincerely,

_____

[Issuing financial institution]

(f) The following format shall be used by the financial institution to confirm an ILC:

_____
[Confirming Financial Institution's Letterhead or Name and Address]

(Date) _____

Our Letter of Credit Advice Number _____

Beneficiary: _____ [U.S. Government agency]

Issuing Financial Institution: _____

Issuing Financial Institution's LC No.: _____

Gentlemen:

1. We hereby confirm the above indicated Letter of Credit, the original of which is attached, issued by _____ [name of issuing financial institution] for drawings of up to United States dollars _____/U.S. $_____ and expiring with our close of business on _____ [the expiration date], or any automatically extended expiration date.

2. Draft(s) drawn under the Letter of Credit and this Confirmation are payable at our office located at _____.

3. We hereby undertake to honor sight draft(s) drawn under and presented with the Letter of Credit and this Confirmation at our offices as specified herein.

4. [This paragraph is omitted if used as a bid guarantee, and subsequent paragraphs are renumbered.] It is a condition of this confirmation that it be deemed automatically extended without amendment for one year from the expiration date hereof, or any automatically extended expiration date, unless:

(a) At least 60 days prior to any such expiration date, we shall notify the Contracting Officer, or the transferee and the issuing financial institution, by registered mail or other receipted means of delivery, that we elect not to consider this confirmation extended for any such additional period; or

(b) The issuing financial institution shall have exercised its right to notify you or the transferee, the account party, and ourselves, of its election not to extend the expiration date of the Letter of Credit.

5. This confirmation is subject to the Uniform Customs and Practice (UCP) for Documentary Credits, 1993 Revision, International Chamber of Commerce Publication No. 500, and to the extent not inconsistent therewith, to the laws of _____ [state of confirming financial institution].

6. If this confirmation expires during an interruption of business of this financial institution as described in Article 17 of the UCP, we specifically agree to effect payment if this credit is drawn against within 30 days after the resumption of our business.

Sincerely,

_____

[Confirming financial institution]

(g) The following format shall be used by the Contracting Officer for a sight draft to draw on the Letter of Credit:

SIGHT DRAFT

_____

[City, State]

(Date) _____

[Name and address of financial institution]

Pay to the order of _____ [Beneficiary Agency] _____ the sum of United States $_____.
This draft is drawn under Irrevocable Letter of Credit No. _____.

_____

[Beneficiary Agency]

By: _____

52.228-15 Performance and Payment Bonds--Construction (JUL 2000)-

(a) Definitions. As used in this clause--

Original contract price means the award price of the contract; or, for requirements contracts, the price payable for the estimated total quantity; or, for indefinite-quantity contracts, the price payable for the specified minimum quantity. Original contract price does not include the price of any options, except those options exercised at the time of contract award.

(b) Amount of required bonds. Unless the resulting contract price is $100,000 or less, the successful offeror shall furnish performance and payment bonds to the Contracting Officer as follows:

(1) Performance bonds (Standard Form 25). The penal amount of performance bonds at the time of contract award shall be 100 percent of the original contract price.

(2) Payment Bonds (Standard Form 25-A). The penal amount of payment bonds at the time of contract award shall be 100 percent of the original contract price.

(3) Additional bond protection. (i) The Government may require additional performance and payment bond protection if the contract price is increased. The increase in protection generally will equal 100 percent of the increase in contract price.

(ii) The Government may secure the additional protection by directing the Contractor to increase the penal amount of the existing bond or to obtain an additional bond.

(c) Furnishing executed bonds. The Contractor shall furnish all executed bonds, including any necessary reinsurance agreements, to the Contracting Officer, within the time period specified in the Bid Guarantee provision of the solicitation, or otherwise specified by the Contracting Officer, but in any event, before starting work.

(d) Surety or other security for bonds. The bonds shall be in the form of firm commitment, supported by corporate sureties whose names appear on the list contained in Treasury Department Circular 570, individual sureties, or by other acceptable security such as postal money order, certified check, cashier's check, irrevocable letter of credit, or, in accordance with Treasury Department regulations, certain bonds or notes of the United States. Treasury Circular 570 is published in the Federal Register or may be obtained from the U.S. Department of Treasury, Financial Management Service, Surety Bond Branch, 401 14th Street, NW, 2nd Floor, West Wing, Washington, DC 20227.

(e) Notice of subcontractor waiver of protection (40 U.S.C. 270b(c). Any waiver of the right to sue on the payment bond is void unless it is in writing, signed by the person whose right is waived, and executed after such person has first furnished labor or material for use in the performance of the contract.

(End of clause)

52.231-5000 EQUIPMENT OWNERSHIP AND OPERATING EXPENSE SCHEDULE MAR 1995)—EFARS

(a) This clause does not apply to terminations. See 52.249-5000, Basis for Settlement of Proposals and FAR Part 49.

(b) Allowable cost for construction and marine plant and equipment in sound workable condition owned or controlled and furnished by a contractor or subcontractor at any tier shall be based on actual cost data for each piece of equipment or groups of similar serial and series for which the Government can determine both ownership and operating costs from the contractor's accounting records. When both ownership and operating costs cannot be determined for any piece of equipment or groups of similar serial or series equipment from the contractor's accounting records, costs for that equipment shall be based upon the applicable provisions of EP 1110-1-8, Construction Equipment Ownership and Operating Expense Schedule, Region ____. Working conditions shall be considered to be average for determining equipment rates using the schedule unless specified otherwise by the contracting officer. For equipment not included in the schedule, rates for comparable pieces of equipment may be used or a rate may be developed using the formula provided in the schedule. For forward pricing, the schedule in effect at the time of negotiations shall apply. For retroactive pricing, the schedule in effect at the time the work was performed shall apply.

(c) Equipment rental costs are allowable, subject to the provisions of FAR 31.105(d)(ii) and FAR 31.205-36. Rates for equipment rented from an organization under common control, lease-purchase arrangements, and sale-leaseback arrangements, will be determined using the schedule, except that actual rates will be used for equipment leased from an organization under common control that has an established practice of leasing the same or similar equipment to unaffiliated lessees.

(d) When actual equipment costs are proposed and the total amount of the pricing action exceeds the small purchase threshold, the contracting officer shall request the contractor to submit either certified cost or pricing data, or partial/limited data, as appropriate. The data shall be submitted on Standard Form 1411, Contract Pricing Proposal Cover Sheet.

(End of clause)

52.232-33 PAYMENT BY ELECTRONIC FUNDS TRANSFER—CENTRAL CONTRACTOR REGISTRATION (OCT 2003)

(a) Method of payment. (1) All payments by the Government under this contract shall be made by electronic funds transfer (EFT), except as provided in paragraph (a)(2) of this clause. As used in this clause, the term “EFT” refers to the funds transfer and may also include the payment information transfer.

(2) In the event the Government is unable to release one or more payments by EFT, the Contractor agrees to either--

(i) Accept payment by check or some other mutually agreeable method of payment; or

(ii) Request the Government to extend the payment due date until such time as the Government can make payment by EFT (but see paragraph (d) of this clause).

(b) Contractor's EFT information. The Government shall make payment to the Contractor using the EFT information contained in the Central Contractor Registration (CCR) database. In the event that the EFT information changes, the Contractor shall be responsible for providing the updated information to the CCR database.

(c) Mechanisms for EFT payment. The Government may make payment by EFT through either the Automated Clearing House (ACH) network, subject to the rules of the National Automated Clearing House Association, or the Fedwire Transfer System. The rules governing Federal payments through the ACH are contained in 31 CFR part 210.

(d) Suspension of payment. If the Contractor's EFT information in the CCR database is incorrect, then the Government need not make payment to the Contractor under this contract until correct EFT information is entered into the CCR database; and any invoice or contract financing request shall be deemed not to be a proper invoice for the purpose of prompt payment under this contract. The prompt payment terms of the contract regarding notice of an improper invoice and delays in accrual of interest penalties apply.

(e) Liability for uncompleted or erroneous transfers. (1) If an uncompleted or erroneous transfer occurs because the Government used the Contractor's EFT information incorrectly, the Government remains responsible for--

(i) Making a correct payment;

(ii) Paying any prompt payment penalty due; and

(iii) Recovering any erroneously directed funds.

(2) If an uncompleted or erroneous transfer occurs because the Contractor's EFT information was incorrect, or was revised within 30 days of Government release of the EFT payment transaction instruction to the Federal Reserve System, and--

(i) If the funds are no longer under the control of the payment office, the Government is deemed to have made payment and the Contractor is responsible for recovery of any erroneously directed funds; or

(ii) If the funds remain under the control of the payment office, the Government shall not make payment, and the provisions of paragraph (d) of this clause shall apply.

(f) EFT and prompt payment. A payment shall be deemed to have been made in a timely manner in accordance with the prompt payment terms of this contract if, in the EFT payment transaction instruction released to the Federal Reserve System, the date specified for settlement of the payment is on or before the prompt payment due date, provided the specified payment date is a valid date under the rules of the Federal Reserve System.

(g) EFT and assignment of claims. If the Contractor assigns the proceeds of this contract as provided for in the assignment of claims terms of this contract, the Contractor shall require as a condition of any such assignment, that the assignee shall register separately in the CCR database and shall be paid by EFT in accordance with the terms of this clause. Notwithstanding any other requirement of this contract, payment to an ultimate recipient other than the Contractor, or a financial institution properly recognized under an assignment of claims pursuant to subpart 32.8, is not permitted. In all respects, the requirements of this clause shall apply to the assignee as if it were the Contractor. EFT information that shows the ultimate recipient of the transfer to be other than the Contractor, in the absence of a proper assignment of claims acceptable to the Government, is incorrect EFT information within the meaning of paragraph (d) of this clause.

(h) Liability for change of EFT information by financial agent. The Government is not liable for errors resulting from changes to EFT information made by the Contractor's financial agent.

(i) Payment information. The payment or disbursing office shall forward to the Contractor available payment information that is suitable for transmission as of the date of release of the EFT instruction to the Federal Reserve System. The Government may request the Contractor to designate a desired format and method(s) for delivery of payment information from a list of formats and methods the payment office is capable of executing. However, the Government does not guarantee that any particular format or method of delivery is available at any particular payment office and retains the latitude to use the format and delivery method most convenient to the Government. If the Government makes payment by check in accordance with paragraph (a) of this clause, the Government shall mail the payment information to the remittance address contained in the CCR database.

(End of Clause)

52.232-4001 CONTINUING CONTRACTS (ALTERNATE) (MAR 1995) EFARS 52-232-5002

(a) Funds are not available at the inception of this contract to cover the entire contract price. The sum of $1,000.00 has been reserved for this contract and is available for payment to the contractor during the current fiscal year. It is expected that Congress will make appropriations for future fiscal years from which additional funds, together with funds provided by one or more non-federal project sponsors will be reserved for this contract. The liability of the United States for payment beyond the funds reserved for this contract is contingent on the reservation of additional funds.

(b) Failure to make payment in excess of the amount currently reserved, or that may be reserved from time to time, shall not be considered a breach of this contract, and shall not entitle the contractor to a price adjustment under the terms of this contract except as specifically provided in paragraphs (e) and (h) below.

(c) The Government may at any time reserve additional funds for payments under the contract if there are funds available for such purpose. The contracting officer will promptly notify the contractor of any additional funds reserved for the contract by issuing and administrative modification to the contract.

(d) If earnings will be such that funds reserved for the contract will be exhausted before the end of any fiscal year, the contractor shall give written notice to the contracting officer of the estimated date of exhaustion and of additional funds which will be needed to meet payments due or to become due under this contract during that fiscal year. This notice shall be given not less than 45 nor more than 60 days prior to the estimated date of exhaustion.

(e) No payments will be made after exhaustion of funds except to the extent that additional funds are reserved for the contract. If and when sufficient additional funds are reserved, the contractor shall be entitled to simple interest on any payment that the contracting officer determines was actually earned under the terms of this contract and would have been made except for exhaustion of funds. Interest shall be computed from the time such payment would otherwise have been made until actually or constructively made, and shall be at the rate established by the Secretary of the Treasury pursuant to Public Law 92-41, 85 Stat 97, as in effect on the first day of the delay in such payment.

(f) Any suspension, delay, or interruption of work arising from exhaustion or anticipated exhaustion of funds shall not constitute a breach of this contract and shall not entitle the contractor to any price adjustment under a "Suspension of Work" or similar clause or in any other manner under this contract.

(g) An equitable adjustment in performance time shall be made for any increase in the time required for performance of any part of the work arising from exhaustion of funds or the reasonable anticipation of exhaustion of funds.

(h) If, upon the expiration of sixty (60) days after the beginning of the fiscal year following an exhaustion of funds, the Government has failed to reserve sufficient additional funds to cover payments otherwise due, the contractor, by written notice delivered to the contracting officer at any time before such additional funds are reserved, may elect to treat his right to proceed with the work as having been terminated. Such a termination shall be at no cost to the Government, except that, to the extent that additional funds to make payment therefore are allocated to this contract, it may be treated as a termination for the convenience of the Government.

(i) If at any time it becomes apparent that the funds reserved for any fiscal year are in excess of the funds required to meet all payments due or to become due the contractor because of work performed and to be performed under this contract during the fiscal year, the Government reserves the right, after notice to the contractor, to reduce said reservation by the amount of such excess.

(j) The term "Reservation" means monies that have been set aside and made available for payments under this contract.

(End of clause)

52.236-1 PERFORMANCE OF WORK BY THE CONTRACTOR (APR 1984)

The Contractor shall perform on the site, and with its own organization, work equivalent to at least 35 percent of the total amount of work to be performed under the contract. This percentage may be reduced by a supplemental agreement to this contract if, during performing the work, the Contractor requests a reduction and the Contracting Officer determines that the reduction would be to the advantage of the Government.

(End of clause)

52.236-4 PHYSICAL DATA (APR 1984)

Data and information furnished or referred to below is for the Contractor's information. The Government shall not be responsible for any interpretation of or conclusion drawn from the data or information by the Contractor.

(a) The indications of physical conditions on the drawings and in the specifications are the result of site investigations by survey.

(b) Weather conditions. The contractor shall satisfy himself as to the hazards likely to arise from weather conditions.

(c) Transportation facilities. The contractor shall make his own investigation of the conditions of existing public and private roads and clearances, restrictions, bridge load limits and other limitations affecting transportation and ingress and egress at the job site. The unavailability of transportation facilities or limitation thereof shall not become a basis for claims against the Government extensions of time for completion of the work.

(d) N/A

(End of clause)

52.236-16 QUANTITY SURVEYS (APR 1984)

(a) Quantity surveys shall be conducted, and the data derived from these surveys shall be used in computing the quantities of work performed and the actual construction completed and in place.

(b) The Government shall conduct the original and final surveys and make the computations based on them. The Contractor shall conduct the surveys for any periods for which progress payments are requested and shall make the computations based on these surveys. All surveys conducted by the Contractor shall be conducted under the direction of a representative of the Contracting Officer, unless the Contracting Officer waives this requirement in a specific instance.

(c) Promptly upon completing a survey, the Contractor shall furnish the originals of all field notes and all other records relating to the survey or to the layout of the work to the Contracting Officer, who shall use them as necessary to determine the amount of progress payments. The Contractor shall retain copies of all such material furnished to the Contracting Officer.

(End of clause)

52.236-21 SPECIFICATIONS AND DRAWINGS FOR CONSTRUCTION (FEB 1997)

(a) The Contractor shall keep on the work site a copy of the drawings and specifications and shall at all times give the Contracting Officer access thereto. Anything mentioned in the specifications and not shown on the drawings, or shown on the drawings and not mentioned in the specifications, shall be of like effect as if shown or mentioned in both. In case of difference between drawings and specifications, the specifications shall govern. In case of discrepancy in the figures, in the drawings, or in the specifications, the matter shall be promptly submitted to the Contracting Officer, who shall promptly make a determination in writing. Any adjustment by the Contractor without such a determination shall be at its own risk and expense. The Contracting Officer shall furnish from time to time such detailed drawings and other information as considered necessary, unless otherwise provided.

(b) Wherever in the specifications or upon the drawings the words "directed", "required", "ordered", "designated", "prescribed", or words of like import are used, it shall be understood that the "direction", "requirement", "order",

"designation", or "prescription", of the Contracting Officer is intended and similarly the words "approved", "acceptable", "satisfactory", or words of like import shall mean "approved by," or "acceptable to", or "satisfactory to" the Contracting Officer, unless otherwise expressly stated.

(c) Where "as shown," as indicated", "as detailed", or words of similar import are used, it shall be understood that the reference is made to the drawings accompanying this contract unless stated otherwise. The word "provided" as used herein shall be understood to mean "provide complete in place," that is "furnished and installed".

(d) Shop drawings means drawings, submitted to the Government by the Contractor, subcontractor, or any lower tier subcontractor pursuant to a construction contract, showing in detail (1) the proposed fabrication and assembly of structural elements, and (2) the installation (i.e., fit, and attachment details) of materials or equipment. It includes drawings, diagrams, layouts, schematics, descriptive literature, illustrations, schedules, performance and test data, and similar materials furnished by the contractor to explain in detail specific portions of the work required by the contract. The Government may duplicate, use, and disclose in any manner and for any purpose shop drawings delivered under this contract.

(e) If this contract requires shop drawings, the Contractor shall coordinate all such drawings, and review them for accuracy, completeness, and compliance with contract requirements and shall indicate its approval thereon as evidence of such coordination and review. Shop drawings submitted to the Contracting Officer without evidence of the Contractor's approval may be returned for resubmission. The Contracting Officer will indicate an approval or disapproval of the shop drawings and if not approved as submitted shall indicate the Government's reasons therefor. Any work done before such approval shall be at the Contractor's risk. Approval by the Contracting Officer shall not relieve the Contractor from responsibility for any errors or omissions in such drawings, nor from responsibility for complying with the requirements of this contract, except with respect to variations described and approved in accordance with (f) below.

(f) If shop drawings show variations from the contract requirements, the Contractor shall describe such variations in writing, separate from the drawings, at the time of submission. If the Contracting Officer approves any such variation, the Contracting Officer shall issue an appropriate contract modification, except that, if the variation is minor or does not involve a change in price or in time of performance, a modification need not be issued.

(g) The Contractor shall submit to the Contracting Officer for approval four copies (unless otherwise indicated) of all shop drawings as called for under the various headings of these specifications. Three sets (unless otherwise indicated) of all shop drawings, will be retained by the Contracting Officer and one set will be returned to the Contractor.

(End of clause)

52.236-5000 PLANT AND MATERIAL REMOVAL AFTER CONTRACT TERMINATION (MAR 1995)—EFARS

Should this contract be terminated as provided in clause 52.232-4001 because of the failure of Congress to provide additional funds for its completion, the contractor may be permitted to remove plant and material on which payments for preparatory work have been made, subject to an equitable deduction from the amounts due the contractor to reimburse the United States for the unabsorbed value of such plant and material.

(End of clause)

52.249-5000 BASIS FOR SETTLEMENT OF PROPOSALS

Actual costs will be used to determine equipment costs for a settlement proposal submitted on the total cost basis under FAR 49.206-2(b). In evaluating a terminations settlement proposal using the total cost basis, the following principles will be applied to determine allowable equipment costs:

(c) Actual costs for each piece of equipment, or groups of similar serial or series equipment, need not be available in the contractor's accounting records to determine total actual equipment costs.

(d) If equipment costs have been allocated to a contract using predetermined rates , those charges will be adjusted to actual costs.

(3) Recorded job costs adjusted for unallowable expenses will be used to determine equipment operating expenses.
(4) Ownership costs (depreciation) will be determined using the contractor's depreciation schedule (subject to the provisions of FAR 31.205-11).
(5) License, taxes, storage and insurance costs are normally recovered as an indirect expense and unless the contractor charges these costs directly to contracts, they will be recovered through the indirect expense rate.

(End of Clause)

252.236-7001 CONTRACT DRAWINGS, MAPS, AND SPECIFICATIONS (AUG 2000)

(a) The Government will provide to the Contractor, without charge, one set of contract drawings and specifications, except publications incorporated into the technical provisions by reference, in electronic or paper media as chosen by the Contracting Officer.

(b) The Contractor shall--

(1) Check all drawings furnished immediately upon receipt;

(2) Compare all drawings and verify the figures before laying out the work;

(3) Promptly notify the Contracting Officer of any discrepancies;

(4) Be responsible for any errors that might have been avoided by complying with this paragraph (b); and

(5) Reproduce and print contract drawings and specifications as needed.

(c) In general--

(1) Large-scale drawings shall govern small-scale drawings; and

(2) The Contractor shall follow figures marked on drawings in preference to scale measurements.

(d) Omissions from the drawings or specifications or the misdescription of details of work that are manifestly necessary to carry out the intent of the drawings and specifications, or that are customarily performed, shall not relieve the Contractor from performing such omitted or misdescribed details of the work. The Contractor shall perform such details as if fully and correctly set forth and described in the drawings and specifications.

(e) The work shall conform to the specifications and the contract drawings identified on the following index of drawings:

Index to Drawings B-2067 Sheet 2

(End of clause)

52.236-7002 OBSTRUCTION OF NAVIGABLE WATERWAYS. (DEC 1991)

(a) The Contractor shall --

(1) Promptly recover and remove any material, plant, machinery, or appliance which the contractor loses, dumps, throws overboard, sinks, or misplaces, and which, in the opinion of the Contracting Officer, may be dangerous to or obstruct navigation;

(2) Give immediate notice, with description and locations of any such obstructions, to the Contracting Officer; and

(3) When required by the Contracting Officer, mark or buoy such obstructions until the same are removed.

(b) The Contracting Officer may --

(1) Remove the obstructions by contract or otherwise should the Contractor refuse, neglect, or delay compliance with paragraph (a) of this clause; and

(2) Deduct the cost of removal from any monies due or to become due to the Contractor; or

(3) Recover the cost of removal under the Contractor's bond.

(c) The Contractor's liability for the removal of a vessel wrecked or sunk without fault or negligence is limited to that provided in sections 15, 19, and 20 of the River and Harbor Act of March 3, 1899 (33 U.S.C. 410 et. seq.).
(End of clause)

252.236-7004 PAYMENT FOR MOBILIZATION AND DEMOBILIZATION (DEC 1991)

(a) The Government will pay all costs for the mobilization and demobilization of all of the Contractor's plant and equipment at the contract lump sum price for this item.

(1) 70 percent of the lump sum price upon completion of the contractor's mobilization at the work site.

(2) The remaining 30 percent upon completion of demobilization.

(b) The Contracting Officer may require the Contractor to furnish cost data to justify this portion of the bid if the Contracting Officer believes that the percentages in paragraphs (a) (1) and (2) of this clause do not bear a reasonable relation to the cost of the work in this contract.

(1) Failure to justify such price to the satisfaction of the Contracting Officer will result in payment, as determined by the Contracting Officer, of --

(i) Actual mobilization costs at completion of mobilization;

(ii) Actual demobilization costs at completion of demobilization; and

(iii) The remainder of this item in the final payment under this contract.

(2) The Contracting Officer's determination of the actual costs in paragraph (b)(1) of this clause is not subject to appeal.

252.247-7023 Transportation of Supplies by Sea (MAY 2002)

(a) Definitions. As used in this clause --

(1) "Components" means articles, materials, and supplies incorporated directly into end products at any level of manufacture, fabrication, or assembly by the Contractor or any subcontractor.

(2) "Department of Defense" (DoD) means the Army, Navy, Air Force, Marine Corps, and defense agencies.

(3) "Foreign flag vessel" means any vessel that is not a U.S.-flag vessel.

(4) "Ocean transportation" means any transportation aboard a ship, vessel, boat, barge, or ferry through international waters.

(5) "Subcontractor" means a supplier, materialman, distributor, or vendor at any level below the prime contractor whose contractual obligation to perform results from, or is conditioned upon, award of the prime contract and who is performing any part of the work or other requirement of the prime contract.

(6) "Supplies" means all property, except land and interests in land, that is clearly identifiable for eventual use by or owned by the DoD at the time of transportation by sea.

(i) An item is clearly identifiable for eventual use by the DoD if, for example, the contract documentation contains a reference to a DoD contract number or a military destination.

(ii) "Supplies" includes (but is not limited to) public works; buildings and facilities; ships; floating equipment and vessels of every character, type, and description, with parts, subassemblies, accessories, and equipment; machine tools; material; equipment; stores of all kinds; end items; construction materials; and components of the foregoing.

(7) "U.S.-flag vessel" means a vessel of the United States or belonging to the United States, including any vessel registered or having national status under the laws of the United States.

(b)(1) The Contractor shall use U.S.-flag vessels when transporting any supplies by sea under this contract.

(2) A subcontractor transporting supplies by sea under this contract shall use U.S.-flag vessels if--

(i) This contract is a construction contract; or

(ii) The supplies being transported are--

(A) Noncommercial items; or

(B) Commercial items that--

(1) The Contractor is reselling or distributing to the Government without adding value (generally, the Contractor does not add value to items that it contracts for f.o.b. destination shipment);

(2) Are shipped in direct support of U.S. military contingency operations, exercises, or forces deployed in humanitarian or peacekeeping operations; or

(3) Are commissary or exchange cargoes transported outside of the Defense Transportation System in accordance with 10 U.S.C. 2643.

(c) The Contractor and its subcontractors may request that the Contracting Officer authorize shipment in foreign-flag vessels, or designate available U.S.-flag vessels, if the Contractor or a subcontractor believes that --

(1) U.S.-flag vessels are not available for timely shipment;

(2) The freight charges are inordinately excessive or unreasonable; or

(3) Freight charges are higher than charges to private persons for transportation of like goods.

(d) The Contractor must submit any request for use of other than U.S.-flag vessels in writing to the Contracting Officer at least 45 days prior to the sailing date necessary to meet its delivery schedules. The Contracting Officer will process requests submitted after such date(s) as expeditiously as possible, but the Contracting Officer's failure to grant approvals to meet the shipper's sailing date will not of itself constitute a compensable delay under this or any other clause of this contract. Requests shall contain at a minimum --

(1) Type, weight, and cube of cargo;

(2) Required shipping date;

(3) Special handling and discharge requirements;

(4) Loading and discharge points;

(5) Name of shipper and consignee;

(6) Prime contract number; and

(7) A documented description of efforts made to secure U.S.-flag vessels, including points of contact (with names and telephone numbers) with at least two U.S.-flag carriers contacted. Copies of telephone notes, telegraphic and facsimile message or letters will be sufficient for this purpose.

(e) The Contractor shall, within 30 days after each shipment covered by this clause, provide the Contracting Officer and the Maritime Administration, Office of Cargo Preference, U.S. Department of Transportation, 400 Seventh Street SW., Washington, DC 20590, one copy of the rated on board vessel operating carrier's ocean bill of lading, which shall contain the following information:

(1) Prime contract number;

(2) Name of vessel;

(3) Vessel flag of registry;

(4) Date of loading;

(5) Port of loading;

(6) Port of final discharge;

(7) Description of commodity;

(8) Gross weight in pounds and cubic feet if available;

(9) Total ocean freight in U.S. dollars; and

(10) Name of the steamship company.

(f) The Contractor shall provide with its final invoice under this contract a representation that to the best of its knowledge and belief--

(1) No ocean transportation was used in the performance of this contract;

(2) Ocean transportation was used and only U.S.-flag vessels were used for all ocean shipments under the contract;

(3) Ocean transportation was used, and the Contractor had the written consent of the Contracting Officer for all non-U.S.-flag ocean transportation; or

(4) Ocean transportation was used and some or all of the shipments were made on non-U.S.-flag vessels without the written consent of the Contracting Officer. The Contractor shall describe these shipments in the following format:

ITEM	CONTRACT	QUANTITY

DESCRIPTION LINE ITEMS

_____
_____
_____
_____

TOTAL_____

(g) If the final invoice does not include the required representation, the Government will reject and return it to the Contractor as an improper invoice for the purposes of the Prompt Payment clause of this contract. In the event there has been unauthorized use of non-U.S.-flag vessels in the performance of this contract, the Contracting Officer is entitled to equitably adjust the contract, based on the unauthorized use.

(h) In the award of subcontracts for the types of supplies described in paragraph (b)(2) of this clause, the Contractor shall flow down the requirements of this clause as follows:

(1) The Contractor shall insert the substance of this clause, including this paragraph (h), in subcontracts that exceed the simplified acquisition threshold in part 2 of the Federal Acquisition Regulation.

(2) The Contractor shall insert the substance of paragraphs (a) through (e) of this clause, and this paragraph (h), in subcontracts that are at or below the simplified acquisition threshold in part 2 of the Federal Acquisition Regulation.

(End of clause)

General Decision Number: CA030025 06/17/2005 CA25

Superseded General Decision Number: CA020025

State: California

Construction Types: Building, Heavy (Heavy, and Dredging) and Highway

County: Ventura County in California.

BUILDING, DREDGING (does not incldue hopper dredge work), HEAVY (does not include water well drilling), AND HIGHWAY CONSTRUCTION PROJECTS

Modification Number	Publication Date
0	06/13/2003
1	01/30/2004
2	04/02/2004
3	05/21/2004
4	07/16/2004
5	08/27/2004
6	10/08/2004
7	01/14/2005
8	01/28/2005
9	02/11/2005
10	02/25/2005
11	04/08/2005
12	06/17/2005

ASBE0005-002 08/01/2004

	Rates	Fringes
Asbestos Workers/Insulator (Includes the application of all insulating materials, protective coverings, coatings, and finishes to all types of mechanical systems)	$ 34.06	9.84

ASBE0005-004 01/01/2004

	Rates	Fringes
Asbestos Removal worker/hazardous material handler (Includes preparation, wetting, stripping, removal, scrapping, vacuuming, bagging and disposing of all insulation materials from mechanical systems, whether they contain asbestos or not)	$ 15.75	2.55

BOIL0092-003 01/01/2004

	Rates	Fringes

```
  Boilermaker....................$ 32.84            15.61
-----------------------------------------------------------------
* BRCA0004-012 05/01/2005

                                   Rates          Fringes

  Bricklayer; Marble Setter......$ 29.24             8.85
-----------------------------------------------------------------
BRCA0018-007 09/01/2004

                                   Rates          Fringes

  Marble Finisher................$ 20.70             5.81
  Tile Finisher..................$ 17.25             5.16
  Tile Layer.....................$ 27.50             9.37
-----------------------------------------------------------------
BRCA0018-010 09/01/2004

                                   Rates          Fringes

  Terrazzo Finisher..............$ 21.89             7.76
  Terrazzo Worker................$ 29.13             7.76
-----------------------------------------------------------------
CARP0409-001 07/01/2004

                                   Rates          Fringes

  Carpenters:
     (1) Carpenter, Cabinet
     Installer, Insulation
     Installer, Hardwood Floor
     Worker and acoustical
     installer...................$ 30.28             8.40
     (2) Millwright..............$ 30.78             8.40
     (3) Piledriver/Derrick
     Bargeman, Bridge or Dock
     Carpenter, Heavy Framer.....$ 30.41             8.40
     (4)  Bridge Carpenter,
     Rock Bargeman or Scowman,
     Rockslinger, Shingler
     (Commercial),...............$ 30.41             8.40
     (5) Pneumatic Nailer,
     Power Stapler...............$ 30.53             8.40
     (6)  Sawfiler...............$ 30.36             8.40
     (7)  Scaffold Builder.......$ 23.83             8.40
     (8)  Table Power Saw
     Operator....................$ 30.38             8.40

  FOOTNOTE: Work of forming in the construction of open cut
  sewers or storm drains, on operations in which horizontal
  lagging is used in conjunction with steel H-Beams driven or
  placed in pre- drilled holes, for that portion of a lagged
  trench against which concrete is poured, namely, as a
  substitute for back forms (which work is performed by
  piledrivers): $0.13 per hour additional.  Certified Welder
  - $1.00 per hour premium.
-----------------------------------------------------------------
CARP0409-002 07/01/2003

                                   Rates          Fringes
```

```
  Diver
     (1) Wet.....................$ 526.88            7.38
     (2) Standby.................$ 263.44            7.38
     (3) Tender..................$ 255.44            7.38
     Standby.....................$ 263.44            7.38
     Wet.........................$ 526.88            7.38

NOTE: Amounts in "Rates" column are per day
----------------------------------------------------------------
CARP0409-005 07/01/2003

                                   Rates          Fringes

  Drywall
     (1) Work on wood framed
     construction of single
     family residences,
     apartments or condominiums
     under 4 stories
      INSTALLERS.................$ 19.00             5.18
      STOCKER/SCRAPPER...........$ 10.00             5.27
     (2) All other work
      INSTALLERS.................$ 29.80             7.38
      STOCKER/SCRAPPER...........$ 10.00             5.27
----------------------------------------------------------------
CARP0409-008 07/01/2003

                                   Rates          Fringes

  Modular Furniture Installer
     (1) Mobile Filing System
     Installer...................$ 13.76             5.80
     (2) Modular Furniture
     Installer...................$ 14.36             5.80
     (3) Full Wall Technician....$ 20.47             5.80
     Full Wall Technician........$ 20.47             5.80
     Mobile Filing System
     Installer...................$ 13.76             5.80
     Modular Furniture Installer.$ 14.36             5.80
----------------------------------------------------------------
ELEC0011-002 12/01/2003

COMMUNICATIONS AND SYSTEMS WORK

                                   Rates          Fringes

  Communications System
     Installer...................$ 22.18          3%+7.15
     Technician..................$ 23.98          3%+7.15

SCOPE OF WORK:
  Installation, testing, service and maintenance of systems
  utilizing the transmission and/or transference of voice,
  sound, vision and digital for commercial, educational,
  security and entertainment purposes for the following: TV
  monitoring and surveillance, background-foreground music,
  intercom and telephone interconnect, inventory control
  systems, microwave transmission, multi-media, multiplex,
  nurse call systems, radio page, school intercom and sound,
```

burglar alarms, fire alarm (see last paragraph below) and low voltage master clock systems in commercial buildings. Communication Systems that transmit or receive information and/or control systems that are intrinsic to the above listed systems; inclusion or exclusion of terminations and testings of conductors determined by their function; excluding all other data systems or multiple systems which include control function or power supply; excluding installation of raceway systems, conduit systems, line voltage work, and energy management systems. Does not cover work performed at China Lake Naval Ordnance Test Station. Fire alarm work shall be performed at the current inside wireman total cost package.

ELEC0952-001 09/27/2004

	Rates	Fringes
Electricians:		
All work within 32 road miles from the nearest base point:		
Cable Splicer	$ 35.97	3%+9.99
Electrician	$ 32.70	3%+9.99
Transportation Systems Technician - Street Lighting & Traffic Signals	$ 24.525	3%+9.99

BASE POINTS: the main Post Office in the cities of Camarillo, Oak View, Oxnard, Santa Paula and Ventura.

All work more than 32 road miles from the nearest base point: Add $5.00 to the basic hourly rate.

ENGI0012-003 07/01/2004

	Rates	Fringes
Power equipment operator - cranes, piledriving, hoisting		
GROUP 1	$ 29.95	14.55
GROUP 2	$ 30.73	14.55
GROUP 3	$ 31.02	14.55
GROUP 4	$ 31.16	14.55
GROUP 5	$ 31.38	14.55
GROUP 6	$ 31.49	14.55
GROUP 7	$ 31.61	14.55
GROUP 8	$ 31.78	14.55
GROUP 9	$ 31.95	14.55
GROUP 10	$ 32.95	14.55
GROUP 11	$ 33.95	14.55
GROUP 12	$ 34.95	14.55
GROUP 13	$ 35.95	14.55
Power equipment operator - tunnel work		
GROUP 1	$ 31.23	14.55
GROUP 2	$ 31.52	14.55
GROUP 3	$ 31.66	14.55
GROUP 4	$ 31.88	14.55
GROUP 5	$ 31.99	14.55

```
      GROUP  6....................$ 32.11            14.55
      GROUP  7....................$ 32.41            14.55
   Power equipment operators:
      GROUP  1....................$ 28.60            14.55
      GROUP  2....................$ 29.38            14.55
      GROUP  3....................$ 29.67            14.55
      GROUP  4....................$ 31.16            14.55
      GROUP  5....................$ 32.26            14.55
      GROUP  6....................$ 31.38            14.55
      GROUP  7....................$ 32.48            14.55
      GROUP  8....................$ 31.49            14.55
      GROUP  9....................$ 32.59            14.55
      GROUP 10....................$ 31.61            14.55
      GROUP 11....................$ 32.71            14.55
      GROUP 12....................$ 31.78            14.55
      GROUP 13....................$ 31.88            14.55
      GROUP 14....................$ 31.91            14.55
      GROUP 15....................$ 31.99            14.55
      GROUP 16....................$ 32.11            14.55
      GROUP 17....................$ 32.28            14.55
      GROUP 18....................$ 32.38            14.55
      GROUP 19....................$ 32.49            14.55
      GROUP 20....................$ 32.61            14.55
      GROUP 21....................$ 32.78            14.55
      GROUP 22....................$ 32.88            14.55
      GROUP 23....................$ 32.99            14.55
      GROUP 24....................$ 33.11            14.55
      GROUP 25....................$ 33.28            14.55
```

FOOTNOTES:

PREMIUM PAY of $3.75 per hour shall be paid on all power equipment operator work at Camp Pendleton, Point Arguello, and Vandenburg AFB.

Workers required to suit up and work in a hazardous material environment: $2.00 per hour additional. Combination mixer and compressor operator on gunite work shall be classified as a concrete mobile mixer operator.

POWER EQUIPMENT OPERATORS CLASSIFICATIONS

GROUP 1: Bargeman; Brakeman; Compressor operator; Ditch Witch, with seat or similar type equipment; Elevator operator-inside; Engineer Oiler; Forklift operator (includes loed, lull or similar types under 5 tons; Generator operator; Generator, pump or compressor plant operator; Pump operator; Signalman; Switchman

GROUP 2: Asphalt-rubber plant operator (nurse tank operator); Concrete mixer operator-skip type; Conveyor operator; Fireman; Forklift operator (includes loed, lull or similar types over 5 tons; Hydrostatic pump operator; oiler crusher (asphalt or concrete plant); Petromat laydown machine; PJU side dum jack; Screening and conveyor machine oeprator (or similar types); Skiploader (wheel type up to 3/4 yd. without attachment); Tar pot fireman; Temporary heating plant operator; Trenching machine oiler

GROUP 3: Asphalt-rubber blend operator; Bobcat or similar type (side steer); Equipment greaser (rack); Ford Ferguson (with dragtype attachments); Helicopter radioman (ground);

Stationary pipe wrapping and cleaning machine operator

GROUP 4: Asphalt plant fireman; Backhoe operator (mini-max or similar type); Boring machine operator; Boxman or mixerman (asphalt or concrete); Chip spreading machine operator; Concrete cleaning decontamination machine operator; Concrete Pump Operator (small portable); Drilling machine operator, small auger types (Texoma super economatic or similar types - Hughes 100 or 200 or similar types - drilling depth of 30' maximum); Equipment greaser (grease truck); Guard rail post driver operator; Highline cableway signalman; Horizontal Directional Drilling Machine; Hydra-hammer-aero stomper; Micro Tunneling (above ground tunnel); Power concrete curing machine operator; Power concrete saw operator; Power-driven jumbo form setter operator; Power sweeper operator; Rock Wheel Saw/Trencher; Roller operator (compacting); Screed operator (asphalt or concrete); Trenching machine operator (up to 6 ft.); Vacuum or much truck

GROUP 5: Equipment Greaser (Grease Truck/Multi Shift).

GROUP 6: Articulating material hauler; Asphalt plant engineer; Batch plant operator; Bit sharpener; Concrete joint machine operator (canal and similar type); Concrete planer operator; Dandy digger; Deck engine operator; Derrickman (oilfield type); Drilling machine operator, bucket or auger types (Calweld 100 bucket or similar types - Watson 1000 auger or similar types - Texoma 330, 500 or 600 auger or similar types - drilling depth of 45' maximum); Drilling machine operator (including water wells); Hydrographic seeder machine operator (straw, pulp or seed), Jackson track maintainer, or similar type; Kalamazoo Switch tamper, or similar type; Machine tool operator; Maginnis internal full slab vibrator, Mechanical berm, curb or gutter(concrete or asphalt); Mechanical finisher operator (concrete, Clary-Johnson-Bidwell or similar); Micro tunnel system (below ground); Pavement breaker operator (truck mounted); Road oil mixing machine operator; Roller operator (asphalt or finish), rubber-tired earth moving equipment (single engine, up to and including 25 yds. struck); Self-propelled tar pipelining machine operator; Skiploader operator (crawler and wheel type, over 3/4 yd. and up to and including 1-1/2 yds.); Slip form pump operator (power driven hydraulic lifting device for concrete forms); Tractor operator-bulldozer, tamper-scraper (single engine, up to 100 h.p. flywheel and similar types, up to and including D-5 and similar types); Tugger hoist operator (1 drum); Ultra high pressure waterjet cutting tool system operator; Vacuum blasting machine operator

GROUP 7: Welder - General

GROUP 8: Asphalt or concrete spreading operator (tamping or finishing); Asphalt paving machine operator (Barber Greene or similar type); Asphalt-rubber distribution operator; Backhoe operator (up to and including 3/4 yd.), small ford, Case or similar; Cast-in-place pipe laying machine operator; Combination mixer and compressor operator (gunite work); Compactor operator (self-propelled); Concrete mixer

operator (paving); Crushing plant operator; Drill Doctor; Drilling machine operator, Bucket or auger types (Calweld 150 bucket or similar types - Watson 1500, 2000 2500 auger or similar types - Texoma 700, 800 auger or similar types - drilling depth of 60' maximum); Elevating grader operator; Grade checker; Gradall operator; Grouting machine operator; Heavy-duty repairman; Heavy equipment robotics operator; Kalamazoo balliste regulator or similar type; Kolman belt loader and similar type; Le Tourneau blob compactor or similar type; Loader operator (Athey, Euclid, Sierra and similar types); Mobark Chipper or similar; Ozzie padder or similar types; P.C. slot saw; Pneumatic concrete placing machine operator (Hackley-Presswell or similar type); Pumpcrete gun operator; Rock Drill or similar types; Rotary drill operator (excluding caisson type); Rubber-tired earth-moving equipment operator (single engine, caterpillar, Euclid, Athey Wagon and similar types with any and all attachments over 25 yds. up to and including 50 cu. yds. struck); Rubber-tired earth-moving equipment operator (multiple engine up to and including 25 yds. struck); Rubber-tired scraper operator (self-loading paddle wheel type-John Deere, 1040 and similar single unit); Self-propelled curb and gutter machine operator; Shuttle buggy; Skiploader operator (crawler and wheel type over 1-1/2 yds. up to and including 6-1/2 yds.); Soil remediation plant operator; Surface heaters and planer operator; Tractor compressor drill combination operator; Tractor operator (any type larger than D-5 - 100 flywheel h.p. and over, or similar-bulldozer, tamper, scraper and push tractor single engine); Tractor operator (boom attachments), Traveling pipe wrapping, cleaning and bendng machine operator; Trenching machine operator (over 6 ft. depth capacity, manufacturer's rating); trenching Machine with Road Miner attachment (over 6 ft depth capacity): Ultra high pressure waterjet cutting tool system mechanic; Water pull (compaction) operator

GROUP 9: Heavy Duty Repairman

GROUP 10: Drilling machine operator, Bucket or auger types (Calweld 200 B bucket or similar types-Watson 3000 or 5000 auger or similar types-Texoma 900 auger or similar types-drilling depth of 105' maximum); Dual drum mixer, dynamic compactor LDC350 (or similar types); Monorail locomotive operator (diesel, gas or electric); Motor patrol-blade operator (single engine); Multiple engine tractor operator (Euclid and similar type-except Quad 9 cat.); Rubber-tired earth-moving equipment operator (single engine, over 50 yds. struck); Pneumatic pipe ramming tool and similar types; Prestressed wrapping machine operator; Rubber-tired earth-moving equipment operator (single engine, over 50 yds. struck); Rubber tired earth moving equipment operator (multiple engine, Euclid, caterpillar and similar over 25 yds. and up to 50 yds. struck), Tower crane repairman; Tractor loader operator (crawler and wheel type over 6-1/2 yds.); Woods mixer operator (and similar Pugmill equipment)

GROUP 11: Heavy Duty Repairman - Welder Combination, Welder - Certified.

GROUP 12: Auto grader operator; Automatic slip form operator; Drilling machine operator, bucket or auger types (Calweld, auger 200 CA or similar types - Watson, auger 6000 or similar types - Hughes Super Duty, auger 200 or similar types - drilling depth of 175' maximum); Hoe ram or similar with compressor; Mass excavator operator less tha 750 cu. yards; Mechanical finishing machine operator; Mobile form traveler operator; Motor patrol operator (multi-engine); Pipe mobile machine operator; Rubber-tired earth- moving equipment operator (multiple engine, Euclid, Caterpillar and similar type, over 50 cu. yds. struck); Rubber-tired self- loading scraper operator (paddle-wheel-auger type self-loading - two (2) or more units)

GROUP 13: Rubber-tired earth-moving equipment operator operating equipment with push-pull system (single engine, up to and including 25 yds. struck)

GROUP 14: Canal liner operator; Canal trimmer operator; Remote- control earth-moving equipment operator (operating a second piece of equipment: $1.00 per hour additional); Wheel excavator operator (over 750 cu. yds.)

GROUP 15: Rubber-tired earth-moving equipment operator, operating equipment with push-pull system (single engine, Caterpillar, Euclid, Athey Wagon and similar types with any and all attachments over 25 yds. and up to and including 50 yds. struck); Rubber-tired earth-moving equipment operator, operating equipment with push-pull system (multiple engine-up to and including 25 yds. struck)

GROUP 16: Rubber-tired earth-moving equipment operator, operating equipment with push-pull system (single engine, over 50 yds. struck); Rubber-tired earth-moving equipment operator, operating equipment with push-pull system (multiple engine, Euclid, Caterpillar and similar, over 25 yds. and up to 50 yds. struck)

GROUP 17: Rubber-tired earth-moving equipment operator, operating equipment with push-pull system (multiple engine, Euclid, Caterpillar and similar, over 50 cu. yds. struck); Tandem tractor operator (operating crawler type tractors in tandem - Quad 9 and similar type)

GROUP 18: Rubber-tired earth-moving equipment operator, operating in tandem (scrapers, belly dumps and similar types in any combination, excluding compaction units - single engine, up to and including 25 yds. struck)

GROUP 19: Rotex concrete belt operator (or similar types); Rubber-tired earth-moving equipment operator, operating in tandem (scrapers, belly dumps and similar types in any combination, excluding compaction units - single engine, Caterpillar, Euclid, Athey Wagon and similar types with any and all attachments over 25 yds.and up to and including 50 cu. yds. struck); Rubber-tired earth-moving equipment operator, operating in tandem (scrapers, belly dumps and similar types in any combination, excluding compaction units - multiple engine, up to and including 25 yds. struck)

GROUP 20: Rubber-tired earth-moving equipment operator, operating in tandem (scrapers, belly dumps and similar types in any combination, excluding compaction units - single engine, over 50 yds. struck); Rubber-tired earth-moving equipment operator, operating in tandem (scrapers, belly dumps, and similar types in any combination, excluding compaction units - multiple engine, Euclid, Caterpillar and similar, over 25 yds. and up to 50 yds. struck)

GROUP 21: Rubber-tired earth-moving equipment operator, operating in tandem (scrapers, belly dumps and similar types in any combination, excluding compaction units - multiple engine, Euclid, Caterpillar and similar type, over 50 cu. yds. struck)

GROUP 22: Rubber-tired earth-moving equipment operator, operating equipment with the tandem push-pull system (single engine, up to and including 25 yds. struck)

GROUP 23: Rubber-tired earth-moving equipment operator, operating equipment with the tandem push-pull system (single engine, Caterpillar, Euclid, Athey Wagon and similar types with any and all attachments over 25 yds. and up to and including 50 yds. struck); Rubber-tired earth-moving equipment operator, operating with the tandem push-pull system (multiple engine, up to and including 25 yds. struck)

GROUP 24: Rubber-tired earth-moving equipment operator, operating equipment with the tandem push-pull system (single engine, over 50 yds. struck); Rubber-tired earth-moving equipment operator, operating equipment with the tandem push-pull system (multiple engine, Euclid, Caterpillar and similar, over 25 yds. and up to 50 yds. struck)

GROUP 25: Concrete pump operator-truck mounted; Rubber-tired earth-moving equipment operator, operating equipment with the tandem push-pull system (multiple engine, Euclid, Caterpillar and similar type, over 50 cu. yds. struck)

CRANES, PILEDRIVING AND HOISTING EQUIPMENT CLASSIFICATIONS

GROUP 1: Engineer oiler; Fork lift operator (includes loed, lull or similar types)

GROUP 2: Truck crane oiler

GROUP 3: A-frame or winch truck operator; Ross carrier operator (jobsite)

GROUP 4: Bridge-type unloader and turntable operator; Helicopter hoist operator

GROUP 5: Hydraulic boom truck; Stinger crane (Austin-Western or similar type); Tugger hoist operator (1 drum)

GROUP 6: Bridge crane operator; Cretor crane operator; Hoist

operator (Chicago boom and similar type); Lift mobile operator; Lift slab machine operator (Vagtborg and similar types); Material hoist and/or manlift operator; Polar gantry crane operator; Self Climbing scaffold (or similar type); Shovel, backhoe, dragline, clamshell operator (over 3/4 yd. and up to 5 cu. yds. mrc); Tugger hoist operator

GROUP 7: Pedestal crane operator; Shovel, backhoe, dragline, clamshell operator (over 5 cu. yds. mrc); Tower crane repair; Tugger hoist operator (3 drum)

GROUP 8: Crane operator (up to and including 25 ton capacity); Crawler transporter operator; Derrick barge operator (up to and including 25 ton capacity); Hoist operator, stiff legs, Guy derrick or similar type (up to and including 25 ton capacity); Shovel, backhoe, dragline, clamshell operator (over 7 cu. yds., M.R.C.)

GROUP 9: Crane operator (over 25 tons and up to and including 50 tons mrc); Derrick barge operator (over 25 tons up to and including 50 tons mrc); Highline cableway operator; Hoist operator, stiff legs, Guy derrick or similar type (over 25 tons up to and including 50 tons mrc); K-crane operator; Polar crane operator; Self erecting tower crane operator maximum lifting capacity ten tons

GROUP 10: Crane operator (over 50 tons and up to and including 100 tons mrc); Derrick barge operator (over 50 tons up to and including 100 tons mrc); Hoist operator, stiff legs, Guy derrick or similar type (over 50 tons up to and including 100 tons mrc), Mobile tower crane operator (over 50 tons, up to and including 100 tons M.R.C.); Tower crane operator and tower gantry

GROUP 11: Crane operator (over 100 tons and up to and including 200 tons mrc); Derrick barge operator (over 100 tons up to and including 200 tons mrc); Hoist operator, stiff legs, Guy derrick or similar type (over 100 tons up to and including 200 tons mrc); Mobile tower crane operator (over 100 tons up to and including 200 tons mrc)

GROUP 12: Crane operator (over 200 tons up to and including 300 tons mrc); Derrick barge operator (over 200 tons up to and including 300 tons mrc); Hoist operator, stiff legs, Guy derrick or similar type (over 200 tons, up to and including 300 tons mrc); Mobile tower crane operator (over 200 tons, up to and including 300 tons mrc)

GROUP 13: Crane operator (over 300 tons); Derrick barge operator (over 300 tons); Helicopter pilot; Hoist operator, stiff legs, Guy derrick or similar type (over 300 tons); Mobile tower crane operator (over 300 tons)

TUNNEL CLASSIFICATIONS

GROUP 1: Skiploader (wheel type up to 3/4 yd. without attachment)

GROUP 2: Power-driven jumbo form setter operator

GROUP 3: Dinkey locomotive or motorperson (up to and including 10 tons)

GROUP 4: Bit sharpener; Equipment greaser (grease truck); Slip form pump operator (power-driven hydraulic lifting device for concrete forms); Tugger hoist operator (1 drum); Tunnel locomotive operator (over 10 and up to and including 30 tons)

GROUP 5: Backhoe operator (up to and including 3/4 yd.); Small Ford, Case or similar; Drill doctor; Grouting machine operator; Heading shield operator; Heavy-duty repairperson; Loader operator (Athey, Euclid, Sierra and similar types); Mucking machine operator (1/4 yd., rubber-tired, rail or track type); Pneumatic concrete placing machine operator (Hackley-Presswell or similar type); Pneumatic heading shield (tunnel); Pumpcrete gun operator; Tractor compressor drill combination operator; Tugger hoist operator (2 drum); Tunnel locomotive operator (over 30 tons)

GROUP 6: Heavy Duty Repairman

GROUP 7: Tunnel mole boring machine operator

ENGI0012-004 08/01/2004

	Rates	Fringes
Power equipment operators: (DREDGING)		
(1) Leverman	$ 36.60	14.55
(2) Dredge dozer	$ 32.13	14.55
(3) Deckmate	$ 32.02	14.55
(4) Winch operator (stern winch on dredge)	$ 31.47	14.55
(5) Fireman; Deckhand and Bargeman	$ 30.93	14.55
(6) Barge Mate	$ 31.54	14.55

IRON0002-004 07/01/2004

	Rates	Fringes
Ironworkers:		
Fence Erector	$ 27.02	14.74
Ornamental, Reinforcing and Structural	$ 27.91	14.74

PREMIUM PAY:

$3.00 additional per hour at the following locations:

China Lake Naval Test Station, Chocolate Mountains Naval Reserve-Niland,
Edwards AFB, Fort Irwin Military Station, Fort Irwin Training Center-Goldstone, San Clemente Island, San Nicholas Island, Susanville Federal Prison, 29 Palms - Marine Corps, U.S. Marine Base - Barstow, U.S. Naval Air Facility - Sealey, Vandenberg AFB

$2.00 additional per hour at the following locations:

Army Defense Language Institute - Monterey, Fallon Air Base, Naval Post Graduate School - Monterey, Yermo Marine Corps Logistics Center

$1.00 additional per hour at the following locations:

Port Hueneme, Port Mugu, U.S. Coast Guard Station - Two Rock

LABO0300-003 07/01/2004

	Rates	Fringes
Laborer: Gunite		
GROUP 1	$ 22.84	15.71
GROUP 2	$ 21.89	15.71
GROUP 3	$ 18.35	15.71
Laborer: Tunnel		
GROUP 1	$ 23.57	12.19
GROUP 2	$ 23.89	12.19
GROUP 3	$ 24.35	12.19
GROUP 4	$ 25.04	12.19
Laborers:		
GROUP 1	$ 20.60	12.13
GROUP 2	$ 21.15	12.13
GROUP 3	$ 21.70	12.13
GROUP 4	$ 23.25	12.13
GROUP 5	$ 23.60	12.13

FOOTNOTE: GUNITE PREMIUM PAY: Workers working from a Bosn'n's Chair or suspended from a rope or cable shall receive 40 cents per hour above the foregoing applicable classification rates. Workers doing gunite and/or shotcrete work in a tunnel shall receive 35 cents per hour above the foregoing applicable classification rates, paid on a portal-to-portal basis. Any work performed on, in or above any smoke stack, silo, storage elevator or similar type of structure, when such structure is in excess of 75'-0" above base level and which work must be performed in whole or in part more than 75'-0" above base level, that work performed above the 75'-0" level shall be compensated for at 35 cents per hour above the applicable classification wage rate.

LABORER CLASSIFICATIONS

GROUP 1: Cleaning and handling of panel forms; Concrete screeding for rough strike-off; Concrete, water curing; Demolition laborer, the cleaning of brick if performed by a worker performing any other phase of demolition work, and the cleaning of lumber; Fire watcher, limber, brush loader, piler and debris handler; Flag person; Gas, oil and/or water pipeline laborer; Laborer, asphalt-rubber material loader; Laborer, general or construction; Laborer, general clean-up; Laborer, landscaping; Laborer, jetting; Laborer, temporary water and air lines; Material hose operator (walls, slabs, floors and decks); Plugging, filling of shee bolt holes; Dry packing of concrete; Railroad maintenance, repair track person and road beds; Streetcar and railroad construction track laborers; Rigging and signaling; Scaler;

Slip form raiser; Tar and mortar; Tool crib or tool house laborer; Traffic control by any method; Window cleaner; Wire mesh pulling - all concrete pouring operations

GROUP 2: Asphalt shoveler; Cement dumper (on 1 yd. or larger mixer and handling bulk cement); Cesspool digger and installer; Chucktender; Chute handler, pouring concrete, the handling of the chute from readymix trucks, such as walls, slabs, decks, floors, foundation, footings, curbs, gutters and sidewalks; Concrete curer, impervious membrane and form oiler; Cutting torch operator (demolition); Fine grader, highways and street paving, airport, runways and similar type heavy construction; Gas, oil and/or water pipeline wrapper - pot tender and form person; Guinea chaser; Headerboard person - asphalt; Laborer, packing rod steel and pans; Membrane vapor barrier installer; Power broom sweeper (small); Riprap stonepaver, placing stone or wet sacked concrete; Roto scraper and tiller; Sandblaster (pot tender); Septic tank digger and installer(lead); Tank scaler and cleaner; Tree climber, faller, chain saw operator, Pittsburgh chipper and similar type brush shredder; Underground laborer, including caisson bellower

GROUP 3: Buggymobile person; Concrete cutting torch; Concrete pile cutter; Driller, jackhammer, 2-1/2 ft. drill steel or longer; Dri-pak-it machine; Gas, oil and/or water pipeline wrapper, 6-in. pipe and over, by any method, inside and out; High scaler (including drilling of same); Hydro seeder and similar type; Impact wrench multi-plate; Kettle person, pot person and workers applying asphalt, lay-kold, creosote, lime caustic and similar type materials ("applying" means applying, dipping, brushing or handling of such materials for pipe wrapping and waterproofing); Operator of pneumatic, gas, electric tools, vibrating machine, pavement breaker, air blasting, come-alongs, and similar mechanical tools not separately classified herein; Pipelayer's backup person, coating, grouting, making of joints, sealing, caulking, diapering and including rubber gasket joints, pointing and any and all other services; Rock slinger; Rotary scarifier or multiple head concrete chipping scarifier; Steel headerboard and guideline setter; Tamper, Barko, Wacker and similar type; Trenching machine, hand-propelled

GROUP 4: Asphalt raker, lute person, ironer, asphalt dump person, and asphalt spreader boxes (all types); Concrete core cutter (walls, floors or ceilings), grinder or sander; Concrete saw person, cutting walls or flat work, scoring old or new concrete; Cribber, shorer, lagging, sheeting and trench bracing, hand-guided lagging hammer; Head rock slinger; Laborer, asphalt- rubber distributor boot person; Laser beam in connection with laborers' work; Oversize concrete vibrator operator, 70 lbs. and over; Pipelayer performing all services in the laying and installation of pipe from the point of receiving pipe in the ditch until completion of operation, including any and all forms of tubular material, whether pipe, metallic or non-metallic, conduit and any other stationary type of tubular device used for the conveying of any substance or element, whether water, sewage, solid gas, air, or other product whatsoever

and without regard to the nature of material from which the tubular material is fabricated; No-joint pipe and stripping of same; Prefabricated manhole installer; Sandblaster (nozzle person), water blasting, Porta Shot-Blast

GROUP 5: Blaster powder, all work of loading holes, placing and blasting of all powder and explosives of whatever type, regardless of method used for such loading and placing; Driller: All power drills, excluding jackhammer, whether core, diamond, wagon, track, multiple unit, and any and all other types of mechanical drills without regard to the form of motive power; Toxic waste removal

TUNNEL LABORER CLASSIFICATIONS

GROUP 1: Batch plant laborer; Bull gang mucker, track person; Changehouse person; Concrete crew, including rodder and spreader; Dump person; Dump person (outside); Swamper (brake person and switch person on tunnel work); Tunnel materials handling person

GROUP 2: Chucktender, cabletender; Loading and unloading agitator cars; Nipper; Pot tender, using mastic or other materials (for example, but not by way of limitation, shotcrete, etc.); Vibrator person, jack hammer, pneumatic tools (except driller)

GROUP 3: Blaster, driller, powder person; Chemical grout jet person; Cherry picker person; Grout gun person; Grout mixer person; Grout pump person; Jackleg miner; Jumbo person; Kemper and other pneumatic concrete placer operator; Miner, tunnel (hand or machine); Nozzle person; Operating of troweling and/or grouting machines; Powder person (primer house); Primer person; Sandblaster; Shotcrete person; Steel form raiser and setter; Timber person, retimber person, wood or steel; Tunnel Concrete finisher

GROUP 4: Diamond driller; Sandblaster; Shaft and raise work

GUNITE LABORER CLASSIFICATIONS

GROUP 1: Nozzle person and rod person

GROUP 2: Gun person

GROUP 3: Rebound person

LABO0882-002 01/01/2005

	Rates	Fringes
Asbestos Removal Laborer.....	$ 22.50	10.10

SCOPE OF WORK: Includes site mobilization, initial site cleanup, site preparation, removal of asbestos-containing material and toxic waste, encapsulation, enclosure and disposal of asbestos- containing materials and toxic waste by hand or with equipment or machinery; scaffolding, fabrication of temporary wooden barriers and assembly of decontamination stations.

LABO1184-001 07/01/2004

	Rates	Fringes
Laborers:		
STRIPING/SLURRY SEAL		
GROUP 1	$ 22.16	10.39
GROUP 2	$ 23.41	10.39
GROUP 3	$ 25.34	10.39
GROUP 4	$ 27.01	10.39

LABORERS - STRIPING CLASSIFICATIONS

GROUP 1: Protective coating, pavement sealing, including repair and filling of cracks by any method on any surface in parking lots, game courts and playgrounds; carstops; operation of all related machinery and equipment; equipment repair technician

GROUP 2: Traffic surface abrasive blaster; pot tender - removal of all traffic lines and markings by any method (sandblasting, waterblasting, grinding, etc.) and preparation of surface for coatings. Traffic control person: controlling and directing traffic through both conventional and moving lane closures; operation of all related machinery and equipment

GROUP 3: Traffic delineating device applicator: Layout and application of pavement markers, delineating signs, rumble and traffic bars, adhesives, guide markers, other traffic delineating devices including traffic control. This category includes all traffic related surface preparation (sandblasting, waterblasting, grinding) as part of the application process. Traffic protective delineating system installer: removes, relocates, installs, permanently affixed roadside and parking delineation barricades, fencing, cable anchor, guard rail, reference signs, monument markers; operation of all related machinery and equipment; power broom sweeper

GROUP 4: Striper: layout and application of traffic stripes and markings; hot thermo plastic; tape traffic stripes and markings, including traffic control; operation of all related machinery and equipment

---

PAIN0036-007 07/01/2004

	Rates	Fringes
Painters: (Including Lead Abatement)		
(1) Repaint	$ 19.85	7.19
(2) High Iron & Steel	$ 26.14	7.19
(3) All Other Work	$ 24.14	7.19

REPAINT:
Repaint of any structure with the exception of work involving the aerospace industry, breweries, commercial recreational facilities, hotels which operate commercial establishments as

part of hotel service, and sports facilities, tenant improvement work not included in conjunction with the construction of the building and all repainting of tenant improvement projects.

HIGH IRON & STEEL:
Aerial towers, towers, radio towers, smoke stacks, flag poles (any flag poles that can be finished from the ground with a ladder excluded), elevated water towers, steeples and domes in their entirety and any other extremely high and hazardous work, cooning steel, bos'n chair, or other similar devices, painting in other high hazardous work shall be classified as high iron & steel

---

PAIN0036-008 10/01/2004

	Rates	Fringes
Drywall Finisher	$ 27.58	9.73

PAIN1247-002 01/01/2005

	Rates	Fringes
Soft Floor Layer	$ 28.05	7.15

PLAS0500-002 07/01/2004

	Rates	Fringes
Cement Mason	$ 24.20	14.59

PLUM0016-001 07/01/2004

	Rates	Fringes
Plumber/Pipefitter		
(1) Work on strip malls, light commercial, tenant improvement and remodel work:	$ 24.19	9.34
(2) Work on new additions and remodeling of bars, restaurant, stores and commercial buildings not to exceed 5,000 sq. ft. of floor space	$ 30.32	10.67
(3) Landscape and Irrigation work	$ 24.23	10.60
(4) All other work	$ 31.36	11.24

PLUM0345-001 07/01/2004

	Rates	Fringes
Landscape & Irrigation Fitter	$ 24.23	10.60
Sewer & Storm Drain Work	$ 21.06	10.98

SFCA0669-010 01/01/2005

DOES NOT INCLUDE PORT HUENEME, PORT MUGU, THE CITY OF SANTA PAULA, AND THAT PART OF VENTURA COUNTY WITHIN 25 MILES OF THE CITY LIMITS OF LOS ANGELES:

	Rates	Fringes
Sprinkler Fitter (FIRE)	$ 27.35	12.25

SFCA0709-001 01/01/2005

PORT HUENEME, PORT MUGU, THE CITY OF SANTA PAULA, AND THAT PART OF VENTURA COUNTY WITHIN 25 MILES OF THE CITY LIMITS OF LOS ANGELES:

	Rates	Fringes
Sprinkler Fitter (FIRE)	$ 31.68	15.15

SHEE0273-002 08/01/2004

	Rates	Fringes
Sheet metal worker	$ 29.24	12.95

TEAM0011-002 07/01/2004

	Rates	Fringes
Truck drivers:		
GROUP 1	$ 23.24	13.44
GROUP 2	$ 23.39	13.44
GROUP 3	$ 23.52	13.44
GROUP 4	$ 23.71	13.44
GROUP 5	$ 23.65	13.44
GROUP 6	$ 23.77	13.44
GROUP 7	$ 24.02	13.44
GROUP 8	$ 24.27	13.44
GROUP 9	$ 24.47	13.44
GROUP 10	$ 24.77	13.44
GROUP 11	$ 25.27	13.44

WORK ON ALL MILITARY BASES:
PREMIUM PAY: $3.00 per hour additional.
[29 palms Marine Base, Camp Roberts, China Lake, Edwards AFB, Fort Irwin, George AFB, Marine Corps Logistics Base at Nebo & Yermo, Mountain Warfare Training Center, Bridgeport, Point Arguello, Point Conception, Vandenberg AFB]

TRUCK DRIVERS CLASSIFICATIONS

GROUP 1: Truck driver

GROUP 2: Driver of vehicle or combination of vehicles - 2 axles; Traffic control pilot car excluding moving heavy equipment permit load; Truck mounted broom

GROUP 3: Driver of vehicle or combination of vehicles - 3 axles; Boot person; Cement mason distribution truck; Fuel

truck driver; Water truck - 2 axle; Dump truck, less than 16 yds. water level; Erosion control driver

GROUP 4: Driver of transit mix truck, under 3 yds.; Dumpcrete truck, less than 6-1/2 yds. water level

GROUP 5: Water truck, 3 or more axles; Truck greaser and tire person ($0.50 additional for tire person); Pipeline and utility working truck driver, including winch truck and plastic fusion, limited to pipeline and utility work; Slurry truck driver

GROUP 6: Transit mix truck, 3 yds. or more; Dumpcrete truck, 6-1/2 yds. water level and over; Vehicle or combination of vehicles - 4 or more axles; Oil spreader truck; Dump truck, 16 yds. to 25 yds. water level

GROUP 7: A Frame, Swedish crane or similar; Forklift driver; Ross carrier driver

GROUP 8: Dump truck, 25 yds. to 49 yds. water level; Truck repair person; Water pull - single engine; Welder

GROUP 9: Truck repair person/welder; Low bed driver, 9 axles or over

GROUP 10: Dump truck - 50 yds. or more water level; Water pull - single engine with attachment

GROUP 11: Water pull - twin engine; Water pull - twin engine with attachments; Winch truck driver - $1.25 additional when operating winch or similar special attachments

---

WELDERS - Receive rate prescribed for craft performing operation to which welding is incidental.

==========

Unlisted classifications needed for work not included within the scope of the classifications listed may be added after award only as provided in the labor standards contract clauses (29CFR 5.5 (a) (1) (ii)).

In the listing above, the "SU" designation means that rates listed under the identifier do not reflect collectively bargained wage and fringe benefit rates. Other designations indicate unions whose rates have been determined to be prevailing.

WAGE DETERMINATION APPEALS PROCESS

1.) Has there been an initial decision in the matter? This can be:

* an existing published wage determination
* a survey underlying a wage determination

* a Wage and Hour Division letter setting forth a position on a wage determination matter
* a conformance (additional classification and rate) ruling

On survey related matters, initial contact, including requests for summaries of surveys, should be with the Wage and Hour Regional Office for the area in which the survey was conducted because those Regional Offices have responsibility for the Davis-Bacon survey program. If the response from this initial contact is not satisfactory, then the process described in 2.) and 3.) should be followed.

With regard to any other matter not yet ripe for the formal process described here, initial contact should be with the Branch of Construction Wage Determinations. Write to:

Branch of Construction Wage Determinations

Wage and Hour Division

U.S. Department of Labor

200 Constitution Avenue, N.W.

Washington, DC 20210

2.) If the answer to the question in 1.) is yes, then an interested party (those affected by the action) can request review and reconsideration from the Wage and Hour Administrator (See 29 CFR Part 1.8 and 29 CFR Part 7). Write to:

Wage and Hour Administrator

U.S. Department of Labor

200 Constitution Avenue, N.W.

Washington, DC 20210

The request should be accompanied by a full statement of the interested party's position and by any information (wage payment data, project description, area practice material, etc.) that the requestor considers relevant to the issue.

3.) If the decision of the Administrator is not favorable, an interested party may appeal directly to the Administrative Review Board (formerly the Wage Appeals Board). Write to:

Administrative Review Board

U.S. Department of Labor

200 Constitution Avenue, N.W.

Washington, DC 20210

4.) All decisions by the Administrative Review Board are final.

==========

END OF GENERAL DECISION

SECTION TABLE OF CONTENTS

DIVISION 01 - GENERAL REQUIREMENTS

SECTION 01200

GENERAL REQUIREMENTS

02/99

PART 1 GENERAL

1.1 APPLICABLE PUBLICATIONS
1.2 SUBMITTALS
1.3 PROJECT SIGNS AND BULLETIN BOARDS
1.3.1 General
1.3.2 Construction Signs
1.3.2.1 Materials
1.3.2.2 Execution
1.3.3 Bulletin Board at the Contractor's office
1.3.4 Maintenance and Disposal
1.4 GOVERNMENT FIELD OFFICE
1.5 PUBLIC UTILITIES
1.5.1 General
1.5.2 Utilities To be Relocated or Protected
1.5.3 Relocation or Removal
1.5.4 Coordination
1.5.5 Utilities Not Shown
1.5.6 Electric Current
1.6 NOTICES
1.6.1 Ventura Port District
1.6.2 Traffic Routing
1.6.3 Existing Bench Marks and R/W Markers
1.6.4 United States Coast Guard
1.6.5 Discharge Pipeline
1.7 POINTS OF CONTACT
1.8 AIDS TO NAVIGATION
1.9 DREDGING AIDS
1.10 RESTRICTIONS
1.10.1 Construction Vehicles
1.10.2 Pipeline and Power Line Crossings
1.10.3 Placement Operations
1.10.4 Construction Vehicles
1.10.5 Obstruction of Channel
1.10.6 Booster Pump
1.10.7 Method of Dredging
1.11 MARINE PLANT
1.12 PUBLIC SAFETY
1.13 GENERAL SAFETY REQUIREMENTS
1.13.1 General
1.13.2 Actvity Hazard Analysis
1.14 SIGNAL LIGHTS
1.15 RADIO COMMUNICATION
1.16 PERMITS
1.17 REPAIR OF STREETS, ACCESS ROADS, AND WORK AREAS
1.18 INSPECTION
1.19 NAVIGATION
1.20 WORK AREAS AND EASEMENTS

1.21 CORPS OF ENGINEERS RESERVE FLEET (CERF) IMPLEMENTATION
1.22 TIME EXTENSIONS FOR UNUSUALLY SEVERE WEATHER
1.23 NON CONTRACT WORK
1.24 COORDINATION WITH OTHER CONSTRUCTION

PART 2 MATERIALS (NOT APPLICABLE)

PART 3 EXECUTION (NOT APPLICABLE)

-- End of Section Table of Contents --

SECTION 01200

GENERAL REQUIREMENTS
02/99

PART 1 GENERAL

1.1 APPLICABLE PUBLICATIONS

The publications listed below form a part of this specification to the extent referenced. The publications are referred to in the text by basic designation only.

CODE OF FEDERAL REGULATIONS (CFR)

CFR 29	Part 1926	Safety and Health Regulations for Construction
CFR 33	Part 80	Colregs Demarcation Lines
CFR 33	Part 156	Oil and Hazardous Material Transfer Operations

U.S. ARMY CORPS OF ENGINEERS (USACE)

EM 385-1-1	(2003) U.S. Army Corps of Engineers Safety and Health Requirements Manual
ER 415-1-15	Construction Time Extensions for Weather

U.S. DEPARTMENT OF COMMERCE (DOC)

DOC PS 1	(1983) Construction and Industrial Plywood
DOC PS 20-70	American Softwood Lumber Standard

FEDERAL SPECIFICATIONS (FS)

FS FF-B-575	(Rev C) Bolts, Hexagon and Square
FS FF-N-105	(Rev B; Int Am 4) Nails, Brads, Staples and Spikes: Wire, Cut and Wrought
FS FF-N-836	(Rev D; Am 2) Nut: Square, Hexagon,Cap, Slotted, Castle, Knurled, Welding and Single Ball Seat
FS TT-E-529	(Rev D) Enamel, Alkyd, Semi-Gloss
FS TT-P-25	(Rev E; Am 2) Primer Coating, Exterior (Undercoat for Wood, Ready-Mixed, White and Tints)

CALIFORNIA OCCUPATIONAL SAFETY AND HEALTH REGULATIONS

Title 8 Regulations	California Occupational Safety and Health

Regulations

1.2 SUBMITTALS

Government approval is required for all submittals with a "G" designation. The following shall be submitted in accordance with Section 01330 SUBMITTAL PROCEDURES:

SD-01 Preconstruction Submittals

Site Safety Health Plan G

Activity Hazards Safety Analysis G

Work and Storage Areas Plan G

1.3 PROJECT SIGNS AND BULLETIN BOARDS

1.3.1 General

The Contractor shall construct and erect a project sign and hard hat sign and a bulletin board at respective locations designated by the Contracting Officer. The signs shall conform to the requirements of the drawings attached at the end of this section. Signs shall be erected as soon as possible and within 5 days after commencement of work under this contract.

1.3.2 Construction Signs

1.3.2.1 Materials.
Lumber shall conform to DOC PS 20-70, and shall be seasoned Douglas Fir, S4S, Grade D or better except that posts, braces and spacers shall be construction Grade (WCLB).

Plywood shall conform to DOC PS 1, grade AC, Group 1, Exterior.

Bolts, Nuts and Nails. Bolts and nuts shall be galvanized conform to FS FF-B-575 and FS FF-N-836. Nails shall conform to FS FF-N-105.

Paints and Oils. Paints shall conform to FS TT-P-25 for primer and FS TT-E-529 for finish paint and lettering.

1.3.2.2 Execution.
The following signs shall be erected:

Project Sign at location designated by the Contracting Officer.

Warning Signs facing approaching traffic on all haul roads crossing under overhead power transmission lines.

Two (2) hard hat signs at locations directed.

Four (4) beach placement signs at locations directed.

Project and hard hat signs shall be constructed as detailed in Figures 1, 2, and 3. Decals for hard hat signs will be furnished by the Contracting Officer.

Warning Signs shall be constructed of plywood not less than 12mm thick and

shall be securely bolted to the supports with the bottom of the sign face 900 mm above the ground. The sign face shall be 600 X 1200 mm, all letters shall be 100 mm in height. Haul road signs shall depict the wording: "WARNING: OVERHEAD TRANSMISSION LINES". Beach placement signs shall depict the wording: "DANGER - KEEP OUT, BEACH CLOSED, U.S. ARMY CORPS OF ENGINEERS BEACH NOURISHMENT PROJECT".

All exposed surfaces and edges of plywood shall be given one coat of linseed oil and be wiped prior to applying primer. All exposed surfaces of signs and supports shall be given one coat of primer and 2 finish coats of white paint. Except as otherwise indicated, lettering on all signs shall be black and sized as indicated.

1.3.3 Bulletin Board at the Contractor's office

A weatherproof bulletin board, approximately 900 mm wide and 760 mm high, with hinged glass door shall be provided adjacent to or mounted on the Contractor's project office. If adjacent to the office, the bulletin board shall be securely mounted on no less than 2 posts. Bulletin board and posts shall be painted or have other approved factory finish. The bulletin board shall be easily accessible at all times and shall contain wage rates, equal opportunity notice, and such other items required to be posted.

1.3.4 Maintenance and Disposal

The Contractor shall maintain the signs in good condition throughout the life of the project. Signs shall remain the property of the Contractor and upon completion of the project they shall be removed from the site.

1.4 GOVERNMENT FIELD OFFICE

The Contractor shall provide as a minimum, a separate room in the Contractor's project trailer/office for the Contracting Officer's Representative. The room shall be accessed by an outside door (locked) separate from the Contractor's entry door. The space shall not be less than 3 meters wide by 4.5 meters long, and shall contain the following:

* suitable desk and minimum 2 chairs
* 1 telephone
* independent service for telephone and modem
* 1 file cabinet, minimum 3 drawer, legal, lockable
* access to a copy machine
* access to a FAX machine
* electric light and power
* heater and air conditioning
* toilet facilities consisting of one lavatory and one water closet complete with connections to water (hot and cold) and sewer mains.

A mail slot in the door or a lockable mail box mounted on the surface of the door shall be provided. At completion of the project, the office shall remain the property of the Contractor and shall be removed from the site. Utilities shall be connected and disconnected in accordance with local codes and to the satisfaction of the Contracting Officer.

1.5 PUBLIC UTILITIES

1.5.1 General

The approximate location of all pipelines, sewer lines, and other utilities

known to exist within the limits of the work are indicated on the drawings. The sizes, locations, and names of owners of such utilities are given from available information, but their accuracy is not guaranteed. Except as otherwise indicated on the drawings, all existing utilities will be left in place and the Contractor shall conduct his operations in such a manner that the utilities will be protected from damage at all times, or arrangements shall be made by the Contractor for their relocation at the Contractor's own expense. The Contractor shall be responsible for any damage to utilities known to exist and shall reimburse the owners for such damage caused by his operations.

1.5.2 Utilities To be Relocated or Protected

The Contractor shall notify the Contracting Officer, in writing, 14 calendar days prior to starting work on any utility to be relocated or protected. On each relocation, notification shall include dates on which the Contractor plans excavation, by-pass work, removal work and/or installation work, as applicable.

1.5.3 Relocation or Removal

Utilities to be relocated or removed not as part of this contract are designated "To be Relocated by Others" or "To be Removed by Others," respectively. Utilities shown on the plans and not so designated shall be left in place and will be subject to the provisions of clause 52.236-9 entitled "Protection of Existing Vegetation, Structures, Utilities, and Improvements" of Section 00700 CONTRACT CLAUSES. The Contractor without cost to the Government, may make arrangements with the owner for the temporary relocation and restoration of utilities not designated to be relocated, or for additional work in excess of the work needed to relocate utilities designated for relocation.

1.5.4 Coordination

The Contractor shall consult and cooperate with the owner of utilities that are to be relocated or removed by others to establish a mutual performance schedule and to enable coordination of such work with the construction work. These consultations shall be held as soon as possible after award of the contract or sufficiently in advance of anticipated interference with construction operations to provide required time for the removal or relocation of affected utilities.

1.5.5 Utilities Not Shown

If the Contractor encounters, within the construction limits of the entire project, utilities not shown on the plans and not visible as of the date of this contract and if such utilities will interfere with construction operations, he shall immediately notify the Contracting Officer in writing to enable a determination by the Contracting Officer as to the necessity for removal or relocation. If such utilities are left in place, removed or relocated, as directed by the Contracting Officer, the Contractor shall be entitled to an equitable adjustment for any additional work or delay.

1.5.6 Electric Current

All electric current required by the Contractor shall be furnished at his expense. All temporary lines shall be furnished, installed, connected, and maintained by the Contractor in a workmanlike manner satisfactory to the Contracting Officer Representative and shall be removed by the Contractor

in a like manner at his expense prior to final acceptance of the construction.

1.6 NOTICES

Copies of letters or notifications made to utility companies, U.S. Coast Guard, Harbor District, County, etc. shall be provided to the Contracting Officer.

1.6.1 Ventura Port District

The Contractor shall notify the Contracting Officer and the Ventura Port District at least 2 weeks in advance of commencement of each cycle's dredge operation. The following information shall be provided:

a. Size and type of construction equipment performing work in the project area, including any equipment to be working on the beach.

b. 24-hour telephone numbers of the project engineer, superintendent, and foreman.

c. Schedule for completion of project.

Ventura Port District
1603 Anchors Way Drive tel (805)642-8538
Ventura, CA 93001 fax (805)658-2249

1.6.2 Traffic Routing

The Contractor shall notify the Contracting Officer Representative 7 days in advance of the time work will be started in areas requiring the rerouting of traffic, traffic lane striping, or removal of street signs. The foregoing shall apply to progressive modifications of traffic routing within an area in which work is in progress.

1.6.3 Existing Bench Marks and R/W Markers

The Contractor shall notify the Contracting Officer, in writing, 7 days in advance of the time he proposes to remove any bench mark or right-of-way marker.

1.6.4 United States Coast Guard

The Contractor shall notify the Commander Eleventh Coast Guard District, and the Coast Guard Marine Safety Office / Group LA-LB not less than 14 calendar days prior to commencing work. The notifications, either letter, fax, or e-mail, shall include as a minimum the following information:

a. Project description including the type of operation (i.e. dredging, diving, construction, etc).

b. Location of operation, including Latitude / Longitude (NAD 83).

c. Work start and completion dates and the expected duration of operations. The Coast Guard need to be notified if these dates change.

d. Vessels involved in the operation (name, size and type).

e. VHF-FM radio frequencies monitored by vessels on scene.

f. Point of contact and 24 hour phone number.

g. Potential hazards to navigation.

h. Chart number for the area of operation.

i. Recommend the following language be used in the Local Notice to Mariners: "Mariners are urged to transit at their slowest safe speed to minimize wake, and proceed with caution after passing arrangements have been made."

Mail address:

Commander, 11th Coast Guard District(oan)
Coast Guard Island Building 50-3
Alameda, CA 94501-5100
ATTN: Local Notice to Mariners
TEL: (510) 437-2986
FAX: (510) 437-3423

e-mail: d11lnm@d11.uscg.mil
cc: smedeiros@d11.uscg.mil

U.S. Coast Guard
Marine Safety Office/Group LA-LB
1001 South Seaside Ave, Bldg 20
San Pedro, Ca 90731
Attn: Waterways Management
Phone # (310) 732-2020
Fax # (310) 732-2029
e-mail: rmikulskis@d11.uscg.mil
cc: pgooding@d11.uscg.mil

1.6.5 Discharge Pipeline

If a discharge pipeline is used, the Contractor shall notify the Contracting Officer of the proposed location of the discharge pipeline not less than ten (10) working days in advance of placing the discharge pipeline.

1.7 POINTS OF CONTACT

The following is a list of points of contact:

Company or Agency	Contact	Telephone
U.S. Army Corps of Engineers		
USACE Resident Engineer	Daniel Moore	(909) 981-5571
Project Engineer	Stan Fujimoto	(626) 401-4084
Construction Representative	Rick Lainhart	(626) 401-4094
Ventura Port District		
Ventura Harbor Master	Richard Parsons	(805) 649-9759
General Manager		(805) 642-8538
U.S. Coast Guard		
Local Notice to Mariners	BM3 Patrick Olmstead	(510) 437-2986
Aids-to-Navigation	LT Scott Medeiros	(510) 437-2982
Marine Safety Office / Group LA-LB	BMC Rob Mikulskis	(310) 732-2023

1.8 AIDS TO NAVIGATION

The Contractor shall not remove, relocate, obstruct, willfully damage, make fast to, or interfere with any aids to navigation. The Contractor shall notify the Eleventh Coast Guard District in writing with a copy to the Contracting Officer not less than 30 calendar days in advance of the time he plans to operate any equipment adjacent to any aids to navigation which requires relocation or removal.

1.9 DREDGING AIDS

The Contractor shall obtain the approval of the 11th Coast Guard District and the Harbor Master prior to placing any buoy or other aid marker in the water. Buoys and other dredging aid markers shall be equipped with the necessary lights and the Contractor shall insure that all lights are in proper working order prior to installation. Buoys and dredging aids markers shall be maintained throughout the length of the dredging operation and shall not be colored, marked, or placed in a manner that will obstruct or be confused with other navigational aids. The Contractor's buoys and aid markers shall conform to U.S. Coast Guard regulations.

1.10 RESTRICTIONS

1.10.1 Construction Vehicles

Construction Vehicles shall remain on existing roads to avoid impacts to terrestrial plant communities.

1.10.2 Pipeline and Power Line Crossings

a. General. Should submerged discharge pipelines cause shoaling in the navigation channel, the Contractor shall remove such shoals and restore to the depths required by the contract and/or as existed prior to the laying of the submerged pipe. Materials so removed shall be disposed of in a manner approved by the Contracting Officer. No separate payment will be made for the removal of such shoals and all costs thereof shall be included in the contract price.

b. Channel Crossings. Where the Contractor's discharge pipe or power lines cross navigation channels, the top of the pipe or power lines shall be submerged and maintained to a minimum depth of -6 meters (MLLW) to provide an unrestricted navigation over the pipe / power lines for a distance of not less than 90 meters normal to the channel alignment. The Contractor shall provide anchors or weights to prevent the submerged pipeline and lines from floating. The Contractor shall remove the anchors or weights after completion of dredging operations.

c. River Crossings. The Contractor shall coordinate the discharge pipe location across the Santa Clara River with the Contracting Officer prior to placement. In the event that flow out of the Santa Clara River threatens the pipe, the Contractor shall remove or sufficiently anchor endangered portions of the pipe to prevent damage. The Contractor shall not cause any blockage at the mouth of the Santa Clara River that would interfere with the normal tidal flow or the normal flow characteristics of the river.

1.10.3 Placement Operations

a. Least Tern Site - Pipeline Restrictions. The Contractor shall not route or store discharge pipeline in the Least Tern Site between 15 April

and 1 September, unless otherwise approved by the Contracting Officer. For other requirements see SECTION: ENVIRONMENTAL PROTECTION.

b. The Contractor shall keep all areas neat, clean, and in safe condition at all times and shall remove all unsightly debris in a timely manner.

c. Construction, storage or other activity in areas adjacent to dredge placement areas will not be permitted without the prior written approval of the Contracting officer.

d. The Contractor may temporarily close portions of the beach as required to safely lay discharge pipeline and to place and grade the dredged material. These closures shall be kept to a minimum. The Contractor shall be responsible for providing and placing all necessary signs, barricades, and safety devices. The Contractor shall coordinate beach closings with the Contracting Officer and the Ventura Port District - Richard Parsons, who will in turn coordinate with the California Department of Parks and Recreation.

e. Beach Access Ramp. Where the discharge pipeline is laid on the beach surface, the Contractor shall provide access ramps over the discharge pipeline at not more than 100-meter intervals to provide access for emergency vehicles to the beach, unless otherwise authorized or directed by the Contracting Officer. The ramps shall not be less than 4 meters wide and shall be constructed with material from the adjacent area. No ramps shall be constructed across the vegetated areas, or the least tern area. Maintenance and protection of the discharge pipeline and ramps shall be the responsibility of the Contractor. The discharge pipeline shall be free from holes, and joints shall be watertight outside the designated limits of the placement area.

1.10.4 Construction Vehicles

The Contractor shall secure any necessary permits for vehicular access to the beach. All Contractor's vehicles granted such permit shall display said permit at all times.

1.10.5 Obstruction of Channel

The Government will not undertake to keep the harbor entrance or navigation channels free from vessels or other obstructions. The Contractor shall be required to conduct the work in such a manner as to obstruct navigation as little as possible, and in case the Contractor's plant so obstructs the channel as to make difficult or endanger the passage of vessels, said plant shall be promptly moved on the approach of any vessel to such an extent as may be necessary to afford a practicable passage. Upon the completion of the work, the Contractor shall promptly remove his plant, including ranges, temporary buoys, and piles and other marks placed by him under the contract in navigable waters or on shore. The Contractor's dredge shall be equipped for bridge to bridge communication with other vessels and the Contractor shall monitor prescribed channel in compliance with Coast Guard regulations.

All underwater and above surface hazards to navigation associated with this work shall be marked with a white light of at least 40 candella.

1.10.6 Booster Pump

A booster unit, if required, shall be mounted on rubber to reduce

vibration, be equipped with sufficient muffler system to reduce both the noise and odor, and the blower shall be vented toward the ocean to minimize the noise level. The booster unit shall be fully enclosed, to a height not less than 2 meters, with a bamboo or grape stake chainlink fence.

1.10.7 Method of Dredging

This contract is suitable for the following methods of dredging: hydraulic pipeline (cutter head), hopper dredge, and clamshell-barge. The Contractor shall comply with all applicable Federal, State, County, and municipal laws, regulations, and permits governing the work.

1.11 MARINE PLANT

a. All marine plant and equipment which are required by federal regulations to be inspected by the United States Coast Guard, shall have valid certifications. No marine plant or equipment requiring Coast Guard inspection shall be put into use on the job without the required certification issued by the U.S. Coast Guard Officer in Charge of Marine Inspections.

b. All marine construction equipment shall monitor appropriate VHF marine safety radio channels.

c. Fuel transfer operations shall conform to U.S. Coast Guard design regulations, CFR 33 Part 156.

1.12 PUBLIC SAFETY

Attention is invited to the CONTRACT CLAUSE 52.236-7: PERMITS AND RESPONSIBILITIES. The Contractor shall provide temporary fencing, barricades, and/or guards, as required, to provide protection in the interest of public safety. Whenever the Contractor's operations create a condition hazardous to the public, he shall furnish at his own expense and without cost to the Government, such flagmen and guards as are necessary to give adequate warning to the public of any dangerous conditions to be encountered and he shall furnish, erect, or maintain such fences, barricades, lights, signs and other devices as are necessary to prevent accidents and avoid damage or injury to the public. Flagmen and guards, while on duty and assigned to give warning and safety devices shall conform to applicable city, county, and state requirements. Should the Contractor appear to be neglectful or negligent in furnishing adequate warning and protection measures, the Contracting Officer may direct attention to the existence of a hazard and the necessary warning and protective measures shall be furnished and installed by the Contractor without additional cost to the Government. Should the Contracting Officer point out the inadequacy of warning and protective measures, such action of the Contracting Officer shall not relieve the Contractor from any responsibility for public safety or abrogate his obligation to furnish and pay for those devices. The installation of any general illumination shall not relieve the Contractor of his responsibility for furnishing and maintaining any protective facility.

The Contractor shall furnish flagmen, watchmen, or other security personnel to control traffic and protect pedestrians in the vicinity of the discharge pipe at all times while discharging material in the placement area.

1.13 GENERAL SAFETY REQUIREMENTS

1.13.1 General

The Corps of Engineers Safety and Health Requirements Manual, EM 385-1-1, (see CONTRACT CLAUSES: SECTION 00700, ACCIDENT PREVENTION), the Occupational Safety and Health Act (OSHA) Standards for Construction (Title 29, Code of Federal Regulations Part 1926 as revised from time to time), and the Dredging Contractor of America (DCA) / United States Army Corps of Engineers (USACE) Dredging Safety Management Program (DMSP) are all applicable to this contract. In case of conflict, the most stringent requirement of the three standards is applicable. Pursuant to EM 385-1-1, the Contractor shall submit a Site Safety Health Plan /Accident Prevention Plan (APP).

If the Contractor is a currently accepted participant in the Dredging Contractors of America (DCA) / United States Army Corps of Engineers (USACE) Dredging Safety Management Program (DSMP), as determined by the DCA/USACE Joint Committee, and holds a current valid Certificate of Compliance for both the Contractor Program and the dredges to be used to perform the work required under this contract, the Contractor may, in lieu of the submission of a Site Safety Health Plan / Accident Prevention Plan,

(a) make available for review, upon request, the Contractor's current Safety Management System (SMS) documentation,

(b) submit to the Contracting Officer the current valid Company Certificate of Compliance for its SMS

(c) submit the current dredge(s) Certificate of Compliance based on third party audit, and

(d) submit for review and acceptance, site specific addenda to the SMS as specified in the solicitation.

1.13.2 Actvity Hazard Analysis

Based on the construction schedule, the Contractor shall submit an Activity Hazards Safety Analysis of each major phase of work prior to entering that phase of activity. The analysis shall include major or high risk hazards, as well as commonly recurring deficiencies that might possibly be encountered for that operation, and shall identify proposed methods and techniques of accomplishing each phase in a safe manner. The Prime Contractor's superintendent shall take active participation in the Job Hazard Analysis, including the subcontractors' work. Prior to start of actual work a meeting shall be held with Prime Contractor, Government, and affected subcontractor to review the Job Hazard Analysis. In addition, job site meetings shall be held to indoctrinate foreman and workers on details of this analysis.

1.14 SIGNAL LIGHTS

The Contractor shall display signal lights and conduct his operations in accordance with the General Regulations of the Department of the Army and of the Coast Guard, governing lights and day signals to be displayed by towing vessels with tows, on which no signals can be displayed, vessels working on dredging, jetty, bank protection operations, lights to be displayed on dredge pipelines, and day signals to be displayed by vessels of more than 20 meters in length moored or anchored in a fairway or

channel, and the passing by other vessels of floating plant working in navigable channels, as approved by the Secretary of the Army (33 C.F.R. 201.1-201.16) and the Commandant U.S. Coast Guard (33 C.F.R. 80.18-80.31a and 33 C.F.R. 95.51-95.70). All Contractor's anchor buoys, floating line, and plant shall be marked with flashing beacon lights after dark. Obstructions and hazards to navigation mentioned above shall be painted for visibility during daylight hours.

1.15 RADIO COMMUNICATION

To facilitate and insure the safe passage of vessels in the channel, the Contractor shall provide, operate and maintain on his plant, radio facilities capable of voice communication with vessels using the channel. Station licensing and frequency authorizations shall be the responsibility of the Contractor.

1.16 PERMITS

Reference is made to the clause of the contract entitled: PERMITS AND RESPONSIBILITIES, which obligate the Contractor to obtain all required licenses and permits.

1.17 REPAIR OF STREETS, ACCESS ROADS, AND WORK AREAS

The Contractor shall restore streets, sidewalks, parking lots, and access roads (used for haul routes and mobilizing equipment) and work areas to original condition upon completion of the work for each dredge cycle. Contractor shall restore to the City of Ventura standards.

1.18 INSPECTION

Reference is made to the clause of the contract entitled: INSPECTI0N OF CONSTRUCTION. In addition, the Contractor will be required:

a. To furnish, on the notification of the Contracting Officer, his authorized representative, or any Corps inspector, the use of such boats, boatmen, laborers, and material forming a part of the ordinary and usual equipment and crew of the plant as may be reasonably necessary in inspecting and supervising the work.

b. To furnish, on the notification of the Contracting Officer, his authorized representative, or any Corps inspector, suitable transportation from all points on shore designated by the Contracting Officer to and from the various pieces of plant, and to and from the work areas. Should the Contractor refuse, neglect, or delay compliance with these requirements, the specific facilities may be furnished and maintained by the Contracting Officer, and the cost thereof will be deducted from any amounts due or to become due the Contractor.

c. Upon notification by the Contracting Officer or his authorized representative or any Corps inspector, to allow authorized representatives of the California Regional Water Quality Control Board and the Ventura County Air Pollution Control District or State Air Resources Board to:

* enter upon the Contractor's premises where a regulated facility or activity is located or conducted, or where records are kept;

* have access to and copy, at reasonable times, any records that must

be kept per agency requirements;

* inspect at reasonable times any facilities, equipment (including monitoring and control equipment), practices, or operations regulated by these agencies;

* and sample or monitor at reasonable times any substances or parameters at any location for the purpose of assuring compliance with agency regulations.

1.19 NAVIGATION

The Contractor's operations shall conform to the U.S. Coast Guard publication "Navigation Rules, International-Inland, INST M16672.28" latest edition.

1.20 WORK AREAS AND EASEMENTS

The Contractor shall submit a Work and Storage Areas Plan for approval within 15 days after receipt of Notice to Proceed. The Contractor's work areas and temporary construction easements are as indicated, subject to approval of the Contracting Officer. The Contractor's work area(s) shall be fenced according to the instruction of the Contracting Officer. Upon completion of each dredge cycle, the fence materials shall become the property of the Contractor and shall be removed from the site.

Any damage to electrical underground installations, light poles, pavement, fence, shrubs or other facilities within the Contractor's work area shall be repaired or replaced by and at the expense of the Contractor.

The Contractor shall mark the shoreward limits of the construction easement by means of suitable marker buoys. The remaining portion of the navigation channel shall not be obstructed and shall remain open to traffic. Areas within the construction easement not being used by the Contractor for construction shall be made available for anchorage, however, moorings within the easement will be moved by others within 5 days after written notice by the Contractor to the Contracting Officer.

1.21 CORPS OF ENGINEERS RESERVE FLEET (CERF) IMPLEMENTATION

If the work specified in this contract is performed by a hopper dredge(s), the owner must have an active Basic Ordering Agreement (BOA) for the hopper dredge(s) on file with the Corps. The Contractor shall be obligated to make the hopper dredge(s) available to serve in the Corps of Engineers Reserve Fleet (CERF) at any time that the hopper dredge(s) is performing work under this contract. When the Contracting Officer is notified of the decision to activate this dredge(s) into the CERF, he shall take appropriate action to release the dredge(s). He may then extend or terminate the contract to implement whichever action is in the best interest of the Government. The CERF Contractor shall also be subject to the following conditions:

a. The Director of Civil Works may require the Contractor to perform emergency dredging at another CONUS (48 contiguous states) site for a period of time equal to the remaining time under this contract at the date of notification plus up to ninety (90) days at the previously negotiated rate which appears on the schedule of prices in the BOA.

b. The Chief of Engineers may require the Contractor to perform

emergency dredging at an OCONUS (Outside CONUS which includes Alaska, Hawaii, Puerto Rico, the Virgin Islands, or U.S. Trust Territories) site for a period of time equal to the time remaining under this contract at the date of notification plus up to one hundred eighty (180) days at the negotiated rate which appears on the schedule of prices in the BOA.

c. The CERF shall be activated by the Chief of Engineers or the Director of Civil Works; then the Ordering Contracting Officer will notify the Contractor. From the time of notification, the selected hopper dredge(s) must depart for the emergency assignment within seventy-two (72) hours for CONUS or ten (10) days for OCONUS assignments.

d. A confirming delivery order will be issued pursuant to the Basic Ordering Agreement (BOA) by the Ordering Contracting Officer. Such delivery order shall utilize the schedule of rates in the BOA for the specific hopper dredge(s).

e. If during the time period specified in the paragraphs above, a CERF vessel(s) is still required, the contract performance may be continued for additional time by mutual agreement.

1.22 TIME EXTENSIONS FOR UNUSUALLY SEVERE WEATHER

This provision specifies the procedure for determination of time extensions for unusually severe weather in accordance with the CONTRACT CLAUSES: SECTION 00700, entitled DEFAULT (FIXED PRICE CONSTRUCTION). In order for the Contracting Officer to award a time extension under this clause, the following conditions must be satisfied:

a. The weather experienced at the project site during the contract period must be found to be unusually severe, that is, more severe than the adverse weather anticipated for the project location during any given month.

b. The unusually severe weather must actually cause a delay to the completion of the project. The delay must be beyond the control and without the fault or negligence of the Contractor.

The following schedule of monthly anticipated adverse weather delays is based on observations by the Ventura Port District of wave heights in unprotected waters at the project location from 1993 to 1998. Significant wave height exceeding one (1) meter will constitute adverse weather conditions. The Contractor's project schedule must reflect the following schedule of anticipated adverse weather delays in all weather dependent activities.

MONTHLY ANTICIPATED ADVERSE WEATHER DAYS

JAN	FEB	MAR	APR	MAY	JUN	JUL	AUG	SEP	OCT	NOV	DEC
15	15	9	13	5	5	2	1	3	6	11	17

c. Upon acknowledgment of the Notice to Proceed and continuing throughout the contract, the Contractor will record on the daily CQC report, the occurrence of adverse weather and resultant impact to normally scheduled work. Actual adverse weather delay days must prevent work on critical activities for 50 percent or more of the Contractor's scheduled

work day. The number of actual adverse weather days shall include days impacted by actual adverse weather (even if adverse weather occurred in previous month), be calculated chronologically from the first to the last day of each month, and be recorded as full days. If the number of actual adverse weather delay days exceeds the number of days anticipated in paragraph b, the Contracting Officer will convert any qualifying days to calendar days, giving full consideration for equivalent fair weather work days, and issue a modification in accordance with the Contract Clause entitled: DEFAULT (FIXED PRICE CONSTRUCTION).

1.23 NON CONTRACT WORK

The Contractor and/or his subcontractors shall not perform any work or erect any structure for third parties, landowners or otherwise, within the limits of the rights-of-way without prior approval of the Contracting Officer.

1.24 COORDINATION WITH OTHER CONSTRUCTION

The Contractor shall coordinate work with other construction projects in the vicinity of the project.

PART 2 MATERIALS (NOT APPLICABLE)

PART 3 EXECUTION (NOT APPLICABLE)

-- End of Section --

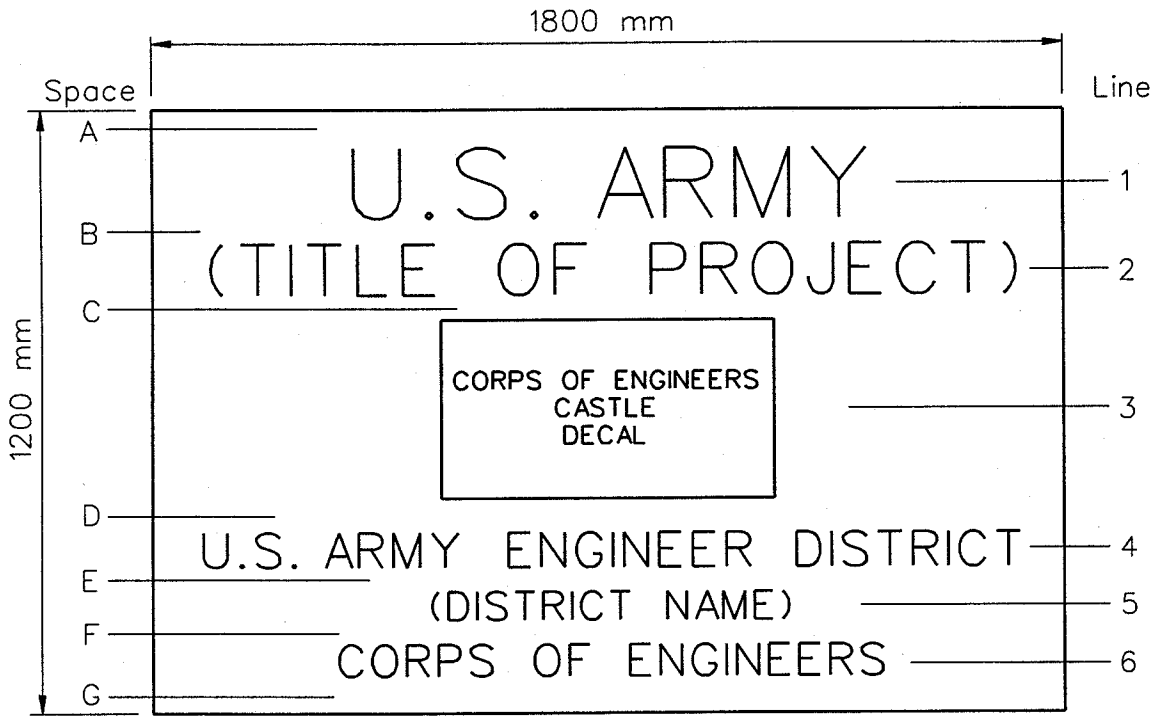

Space	Height	Line	Description	Letter Height	Stroke
A	75				
		1	U.S. ARMY	140	22
B	50				
		2	PROJECT NOMENCLATURE	100	16
C	50				
		3	CORPS OF ENGINEERS CASTLE (DECAL)	345	
D	70				
		4	U.S. ARMY ENGINEER DISTRICT	70	9
E	50				
		5	DISTRICT NAME	60	6
F	50				
		6	CORPS OF ENGINEERS	65	9
G	75				

Letter Color -- Black

PROJECT SIGN
(Army-Civil Works)

Figure 1
October 1996

All units are in millimeters.

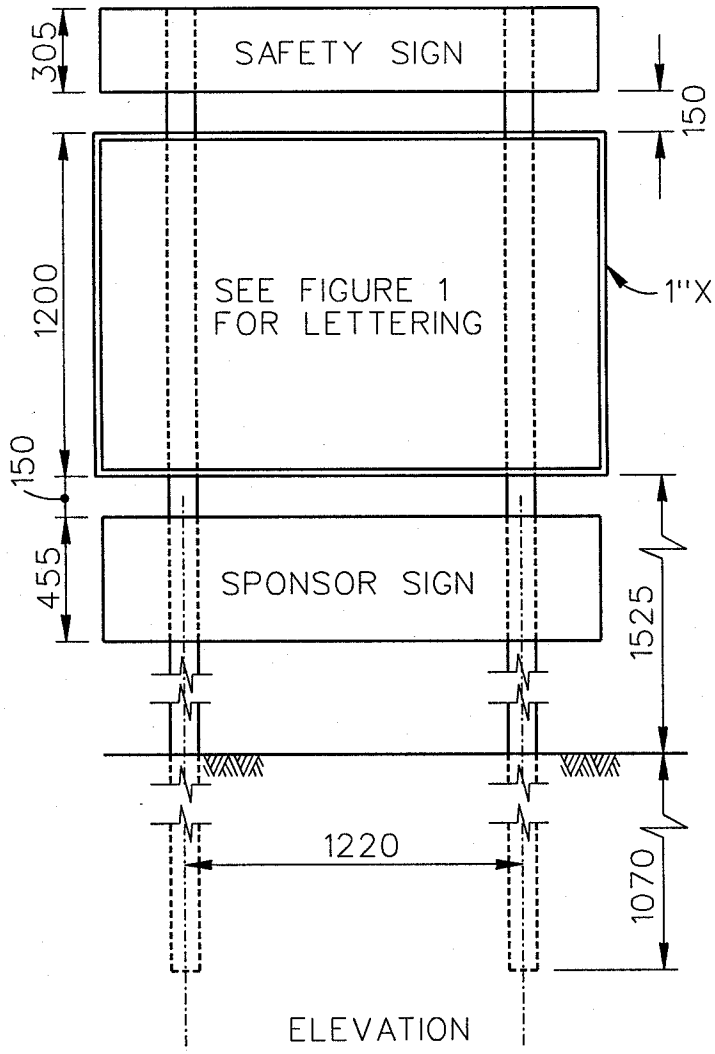

ELEVATION

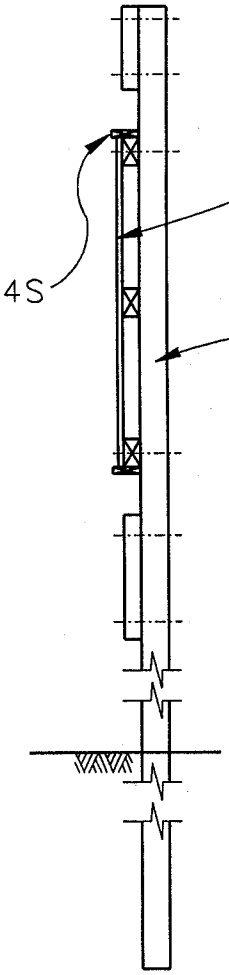

SECTION

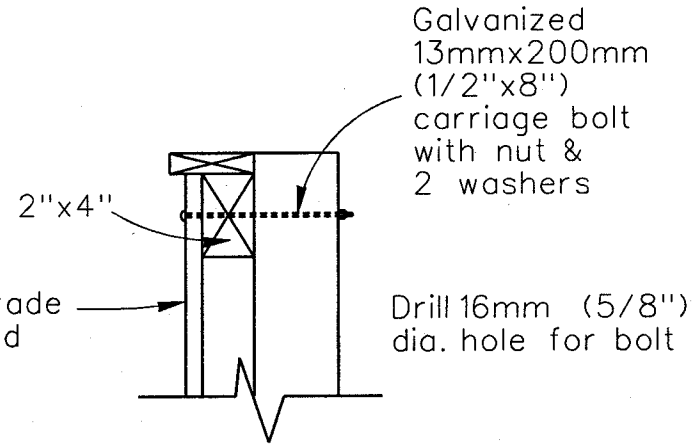

DETAIL

General Notes

1. Lumber to be cut & formed accurately.
2. Secure 1"x4" & plywood with 6d finish nails at not less than 305mm(12") O.C.
3. All exposed nails to be set & holes filled with putty.
4. Sign to be set in good solid ground & backfill carefully tamped into place.
5. Where necessary, posts shall be braced to provide a solid installation.

SIGN DETAILS

Figure 2
October 1996

All units are in millimeters unless otherwise indicated.

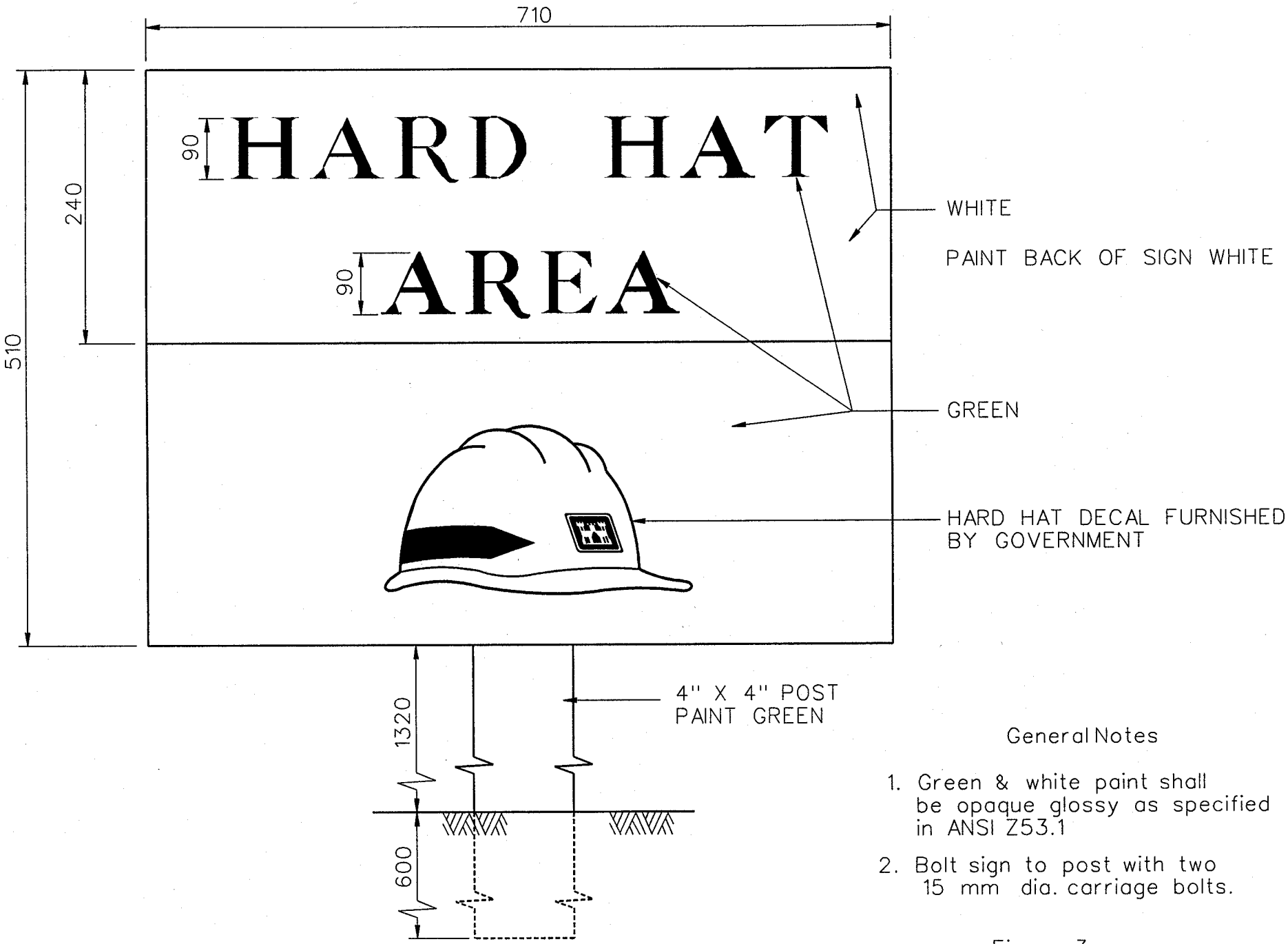

General Notes

1. Green & white paint shall be opaque glossy as specified in ANSI Z53.1
2. Bolt sign to post with two 15 mm dia. carriage bolts.

All units are in millimeters unless otherwise indicated.

Figure 3
October 1996

CORPS OF ENGINEERS U.S. ARMY

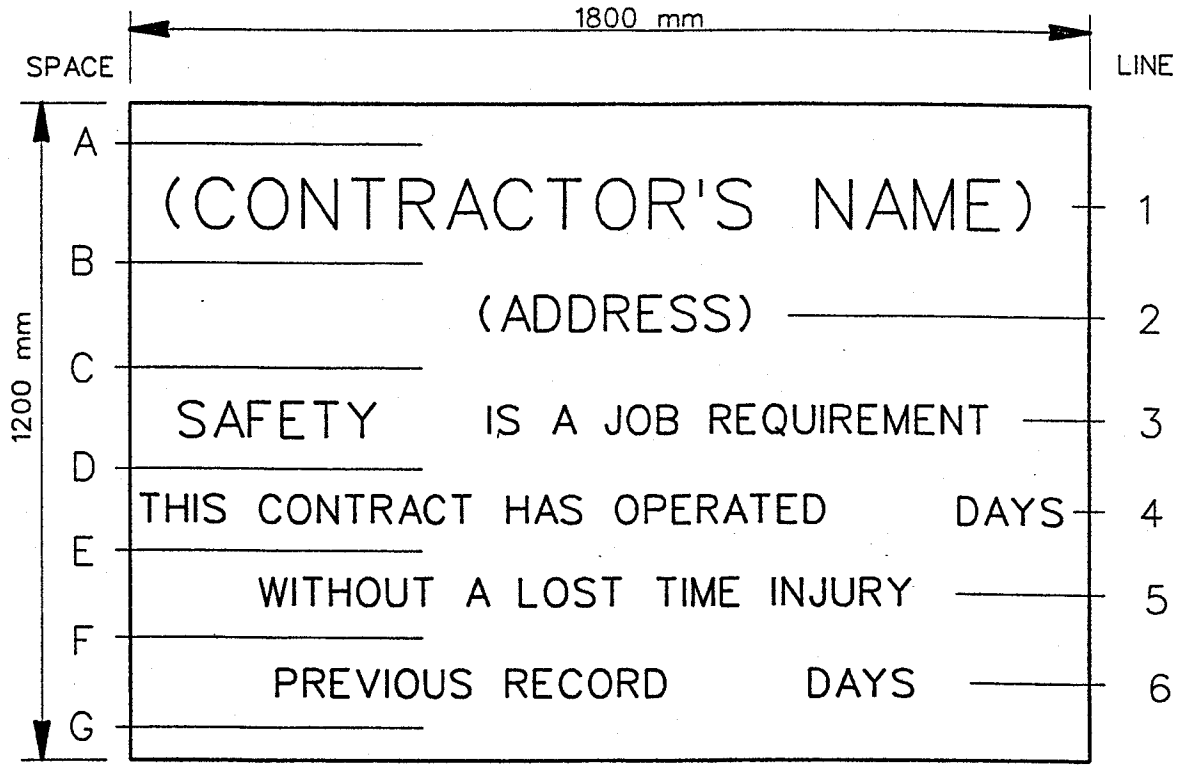

SPACE	HEIGHT	LINE	DESCRIPTION	LETTER HEIGHT
A	125			
		1	CONTRATOR'S NAME	125
B	75			
		2	ADDRESS	75
C	150			
		3	SAFETY IS A JOB REQUIREMENT	115 & 75
D	75			
		4	ALL LETTERING	75
E	75			
		5	ALL LETTERING	75
F	75			
		6	ALL LETTERING	75
G	125			

Notes

Lettering shall be black No. 27038 standard 595.
Sign shall be installed in the same manner as the Project Sign.

All units are in millimeters.

SAFETY SIGN
STANDARD DETAIL

SECTION TABLE OF CONTENTS

DIVISION 01 - GENERAL REQUIREMENTS

SECTION 01270

MEASUREMENT AND PAYMENT

02/94

PART 1 GENERAL

1.1 SUBMITTALS
1.2 LUMP SUM PAYMENT ITEMS
1.2.1 Mobilization and Demobilization
1.3 UNIT PRICE PAYMENT ITEMS
1.3.1 Dredging

PART 2 PRODUCTS (Not Applicable)

PART 3 EXECUTION (Not Applicable)

-- End of Section Table of Contents --

SECTION 01270

MEASUREMENT AND PAYMENT
02/94

PART 1 GENERAL

1.1 SUBMITTALS

None

1.2 LUMP SUM PAYMENT ITEMS

Payment items for the work of this contract for which contract lump sum payments will be made are listed in the PRICING SCHEDULE and described below. All costs for items of work, which are not specifically mentioned to be included in a particular lump sum or unit price payment item, shall be included in the listed lump sum item most closely associated with the work involved. The lump sum price and payment made for each item listed shall constitute full compensation for furnishing all plant, labor, materials, and equipment, and performing any associated Contractor quality control, environmental protection, meeting safety requirements, tests and reports, and for performing all work required for which separate payment is not otherwise provided.

1.2.1 Mobilization and Demobilization

a. Payment. Payment will be made for costs associated with mobilization and demobilization, for each cycle, as defined in Special Clause PAYMENT FOR MOBILIZATION AND DEMOBILIZATION.

b. Unit of Measure: Job.

1.3 UNIT PRICE PAYMENT ITEMS

Payment items for the work of this contract on which the contract unit price payments will be made are listed in the PRICING SCHEDULE and described below. The unit price and payment made for each item listed shall constitute full compensation for furnishing all plant, labor, materials, and equipment, and performing any associated Contractor quality control, environmental protection, meeting safety requirements, tests and reports, and for performing all work required for each of the unit price items.

1.3.1 Dredging

a. Payment. Payment will be made for costs associated with dredging, including overdepth dredging, transporting and deposition of dredge material at designated placement site(s), and other operations incidental thereto, including hydrographic surveys and water quality control and monitoring.

b. Measurement

The total quantity of dredge material for which payment will be made will be by in-place (quantity) measurement in cubic meters by computing

the difference in available material between the pre-dredge survey and the post-dredge survey. Available material is defined as material located within the boundaries of the dredge prism. Specifically, a quantity of available material will be computed between the dredge prism and the bottom surface shown by the soundings of the Government's pre-dredge survey, and a quantity of available material will be computed between the dredge prism and the bottom surface shown by the Government's post-dredge survey. The difference between these two available quantities (pre-dredge and post-dredge) will constitute the quantity of material dredged. Misplaced materials (including any required removal and placement), excessive overdepth dredging and material falling or drawn into the cut from beyond the side slope plane or beyond the limits indicated, will be excluded from the quantities for which payment will be made. The Triangulated Irregular Network (TIN) method will be used for quantity determination. For method of soundings, see SECTION 02020: DREDGING.

c. Unit of Measure: cubic meter

PART 2 PRODUCTS (Not Applicable)

PART 3 EXECUTION (Not Applicable)

-- End of Section --

SECTION TABLE OF CONTENTS

DIVISION 01 - GENERAL REQUIREMENTS

SECTION 01312A

QUALITY CONTROL SYSTEM (QCS)

08/02

1.1 GENERAL
1.1.1 Correspondence and Electronic Communications
1.1.2 Other Factors
1.2 QCS SOFTWARE
1.3 SYSTEM REQUIREMENTS
1.4 RELATED INFORMATION
1.4.1 QCS User Guide
1.4.2 Contractor Quality Control(CQC) Training
1.5 CONTRACT DATABASE
1.6 DATABASE MAINTENANCE
1.6.1 Administration
1.6.1.1 Contractor Information
1.6.1.2 Subcontractor Information
1.6.1.3 Correspondence
1.6.1.4 Equipment
1.6.1.5 Management Reporting
1.6.2 Finances
1.6.2.1 Pay Activity Data
1.6.2.2 Payment Requests
1.6.3 Quality Control (QC)
1.6.3.1 Daily Contractor Quality Control (CQC) Reports.
1.6.3.2 Deficiency Tracking.
1.6.3.3 Three-Phase Control Meetings
1.6.3.4 Accident/Safety Tracking.
1.6.3.5 Features of Work
1.6.3.6 QC Requirements
1.6.4 Submittal Management
1.6.5 Schedule
1.6.6 Import/Export of Data
1.7 IMPLEMENTATION
1.8 DATA SUBMISSION VIA COMPUTER DISKETTE OR CD-ROM
1.8.1 File Medium
1.8.2 Disk or CD-ROM Labels
1.8.3 File Names
1.9 MONTHLY COORDINATION MEETING
1.10 NOTIFICATION OF NONCOMPLIANCE

-- End of Section Table of Contents --

SECTION 01312A

QUALITY CONTROL SYSTEM (QCS)
08/02

1.1 GENERAL

The Government will use the Resident Management System for Windows (RMS) to assist in its monitoring and administration of this contract. The Contractor shall use the Government-furnished Construction Contractor Module of RMS, referred to as QCS, to record, maintain, and submit various information throughout the contract period. The Contractor module, user manuals, updates, and training information can be downloaded from the RMS web site http://winrms.usace.army.mil. This joint Government-Contractor use of RMS and QCS will facilitate electronic exchange of information and overall management of the contract. QCS provides the means for the Contractor to input, track, and electronically share information with the Government in the following areas:

Administration
Finances
Quality Control
Submittal Monitoring
Scheduling
Import/Export of Data

1.1.1 Correspondence and Electronic Communications

For ease and speed of communications, both Government and Contractor will, to the maximum extent feasible, exchange correspondence and other documents in electronic format. Correspondence, pay requests and other documents comprising the official contract record shall also be provided in paper format, with signatures and dates where necessary. Paper documents will govern in the event of discrepancy with the electronic version.

1.1.2 Other Factors

Particular attention is directed to Contract Clause, "Schedules for Construction Contracts", Contract Clause, "Payments", Section 01330, SUBMITTAL PROCEDURES, and Section 01451, CONTRACTOR QUALITY CONTROL, which have a direct relationship to the reporting to be accomplished through QCS. Also, there is no separate payment for establishing and maintaining the QCS database; all costs associated therewith shall be included in the contract pricing for the work.

1.2 QCS SOFTWARE

QCS is a Windows-based program that can be run on a stand-alone personal computer or on a network. The Government will make available the QCS software to the Contractor after award of the construction contract. Prior to the Pre-Construction Conference, the Contractor shall be responsible to download, install and use the latest version of the QCS software from the Government's RMS Internet Website. Upon specific justification and request by the Contractor, the Government can provide QCS on high-density diskettes or CD-ROM. Any program updates of QCS will be made available to

the Contractor via the Government RMS Website as they become available.

1.3 SYSTEM REQUIREMENTS

The following listed hardware and software is the minimum system configuration that the Contractor shall have to run QCS:

Hardware

IBM-compatible PC with 500 MHz Pentium or higher processor

128+ MB RAM for workstation / 256+ MB RAM for server

1 GB hard drive disk space for sole use by the QCS system

3 1/2 inch high-density floppy drive

Compact disk (CD) Reader, 8x speed or higher

SVGA or higher resolution monitor (1024 x 768, 256 colors)

Mouse or other pointing devise

Windows compatible printer (Laser printer must have 4+ MB of RAM)

Connection to the Internet, minimum 56 BPS

Software

MS Windows 98, ME, NT, or 2000

Word Processing software compatible with MS Word 97 or newer

Latest version of : Netscape Navigator, Microsoft Internet Explorer, or other browser that supports HTML 4.0 or higher

Electronic mail (E-mail), MAPI compatible

Virus protection software that is regularly upgraded with all issued manufacturer's updates

1.4 RELATED INFORMATION

1.4.1 QCS User Guide

After contract award, the Contractor shall download instructions for the installation and use of QCS from the Government RMS Internet Website; the Contractor can obtain the current address from the Government. In case of justifiable difficulties, the Government will provide the Contractor with a CD-ROM containing these instructions.

1.4.2 Contractor Quality Control(CQC) Training

The use of QCS will be discussed with the Contractor's QC System Manager during the mandatory CQC Training class.

1.5 CONTRACT DATABASE

Prior to the pre-construction conference, the Government shall provide the Contractor with basic contract award data to use for QCS. The Government will provide data updates to the Contractor as needed, generally by files attached to E-mail. These updates will generally consist of submittal reviews, correspondence status, QA comments, and other administrative and QA data.

1.6 DATABASE MAINTENANCE

The Contractor shall establish, maintain, and update data for the contract in the QCS database throughout the duration of the contract. The Contractor shall establish and maintain the QCS database at the Contractor's site office. Data updates to the Government shall be submitted by E-mail with file attachments, e.g., daily reports, schedule updates, payment requests. If permitted by the Contracting Officer, a data diskette or CD-ROM may be used instead of E-mail (see Paragraph DATA SUBMISSION VIA COMPUTER DISKETTE OR CD-ROM). The QCS database typically shall include current data on the following items:

1.6.1 Administration

1.6.1.1 Contractor Information

The database shall contain the Contractor's name, address, telephone numbers, management staff, and other required items. Within 14 calendar days of receipt of QCS software from the Government, the Contractor shall deliver Contractor administrative data in electronic format via E-mail.

1.6.1.2 Subcontractor Information

The database shall contain the name, trade, address, phone numbers, and other required information for all subcontractors. A subcontractor must be listed separately for each trade to be performed. Each subcontractor/trade shall be assigned a unique Responsibility Code, provided in QCS. Within 14 calendar days of receipt of QCS software from the Government, the Contractor shall deliver subcontractor administrative data in electronic format via E-mail.

1.6.1.3 Correspondence

All Contractor correspondence to the Government shall be identified with a serial number. Correspondence initiated by the Contractor's site office shall be prefixed with "S". Letters initiated by the Contractor's home (main) office shall be prefixed with "H". Letters shall be numbered starting from 0001. (e.g., H-0001 or S-0001). The Government's letters to the Contractor will be prefixed with "C".

1.6.1.4 Equipment

The Contractor's QCS database shall contain a current list of equipment planned for use or being used on the jobsite, including the most recent and planned equipment inspection dates.

1.6.1.5 Management Reporting

QCS includes a number of reports that Contractor management can use to track the status of the project. The value of these reports is reflective

of the quality of the data input, and is maintained in the various sections of QCS. Among these reports are: Progress Payment Request worksheet, QA/QC comments, Submittal Register Status, Three-Phase Inspection checklists.

1.6.2 Finances

1.6.2.1 Pay Activity Data

The QCS database shall include a list of pay activities that the Contractor shall develop in conjunction with the construction schedule. The sum of all pay activities shall be equal to the total contract amount, including modifications. Pay activities shall be grouped by Contract Line Item Number (CLIN), and the sum of the activities shall equal the amount of each CLIN. The total of all CLINs equals the Contract Amount.

1.6.2.2 Payment Requests

All progress payment requests shall be prepared using QCS. The Contractor shall complete the payment request worksheet and include it with the payment request. The work completed under the contract, measured as percent or as specific quantities, shall be updated at least monthly. After the update, the Contractor shall generate a payment request report using QCS. The Contractor shall submit the payment requests with supporting data by E-mail with file attachment(s). If permitted by the Contracting Officer, a data diskette may be used instead of E-mail. A signed paper copy of the approved payment request is also required, which shall govern in the event of discrepancy with the electronic version.

1.6.3 Quality Control (QC)

QCS provides a means to track implementation of the 3-phase QC Control System, prepare daily reports, identify and track deficiencies, document progress of work, and support other contractor QC requirements. The Contractor shall maintain this data on a daily basis. Entered data will automatically output to the QCS generated daily report. The Contractor shall provide the Government a Contractor Quality Control (CQC) Plan within the time required in Section 01451, CONTRACTOR QUALITY CONTROL. Within seven calendar days of Government acceptance, the Contractor shall submit a data diskette or CD-ROM reflecting the information contained in the accepted CQC Plan: schedule, pay activities, features of work, submittal register, QC requirements, and equipment list.

1.6.3.1 Daily Contractor Quality Control (CQC) Reports.

QCS includes the means to produce the Daily CQC Report. The Contractor may use other formats to record basic QC data. However, the Daily CQC Report generated by QCS shall be the Contractor's official report. Data from any supplemental reports by the Contractor shall be summarized and consolidated onto the QCS-generated Daily CQC Report. Daily CQC Reports shall be submitted as required by Section 01451, CONTRACTOR QUALITY CONTROL. Reports shall be submitted electronically to the Government using E-mail or diskette within 24 hours after the date covered by the report. Use of either mode of submittal shall be coordinated with the Government representative. The Contractor shall also provide the Government a signed, printed copy of the daily CQC report.

1.6.3.2 Deficiency Tracking.

The Contractor shall use QCS to track deficiencies. Deficiencies

identified by the Contractor will be numerically tracked using QC punch list items. The Contractor shall maintain a current log of its QC punch list items in the QCS database. The Government will log the deficiencies it has identified using its QA punch list items. The Government's QA punch list items will be included in its export file to the Contractor. The Contractor shall regularly update the correction status of both QC and QA punch list items.

1.6.3.3 Three-Phase Control Meetings

The Contractor shall maintain scheduled and actual dates and times of preparatory and initial control meetings in QCS.

1.6.3.4 Accident/Safety Tracking.

The Government will issue safety comments, directions, or guidance whenever safety deficiencies are observed. The Government's safety comments will be included in its export file to the Contractor. The Contractor shall regularly update the correction status of the safety comments. In addition, the Contractor shall utilize QCS to advise the Government of any accidents occurring on the jobsite. This brief supplemental entry is not to be considered as a substitute for completion of mandatory reports, e.g., ENG Form 3394 and OSHA Form 300.

1.6.3.5 Features of Work

The Contractor shall include a complete list of the features of work in the QCS database. A feature of work may be associated with multiple pay activities. However, each pay activity (see subparagraph "Pay Activity Data" of paragraph "Finances") will only be linked to a single feature of work.

1.6.3.6 QC Requirements

The Contractor shall develop and maintain a complete list of QC testing, transferred and installed property, and user training requirements in QCS. The Contractor shall update all data on these QC requirements as work progresses, and shall promptly provide this information to the Government via QCS.

1.6.4 Submittal Management

The Government will provide the initial submittal register, ENG Form 4288, SUBMITTAL REGISTER, in electronic format. Thereafter, the Contractor shall maintain a complete list of all submittals, including completion of all data columns. Dates on which submittals are received and returned by the Government will be included in its export file to the Contractor. The Contractor shall use QCS to track and transmit all submittals. ENG Form 4025, submittal transmittal form, and the submittal register update, ENG Form 4288, shall be produced using QCS. RMS will be used to update, store and exchange submittal registers and transmittals, but will not be used for storage of actual submittals.

1.6.5 Schedule

The Contractor shall develop a construction schedule consisting of pay activities, in accordance with Contract Clause "Schedules for Construction Contracts", as applicable. This schedule shall be input and maintained in the QCS database either manually or by using the Standard Data Exchange

Format (SDEF). The updated schedule data shall be included with each pay request submitted by the Contractor.

1.6.6 Import/Export of Data

QCS includes the ability to export Contractor data to the Government and to import submittal register and other Government-provided data, and schedule data using SDEF.

1.7 IMPLEMENTATION

Contractor use of QCS as described in the preceding paragraphs is mandatory. The Contractor shall ensure that sufficient resources are available to maintain its QCS database, and to provide the Government with regular database updates. QCS shall be an integral part of the Contractor's management of quality control.

1.8 DATA SUBMISSION VIA COMPUTER DISKETTE OR CD-ROM

The Government-preferred method for Contractor's submission of updates, payment requests, correspondence and other data is by E-mail with file attachment(s). For locations where this is not feasible, the Contracting Officer may permit use of computer diskettes or CD-ROM for data transfer. Data on the disks or CDs shall be exported using the QCS built-in export function. If used, diskettes and CD-ROMs will be submitted in accordance with the following:

1.8.1 File Medium

The Contractor shall submit required data on 3-1/2 inch double-sided high-density diskettes formatted to hold 1.44 MB of data, capable of running under Microsoft Windows 95 or newer. Alternatively, CD-ROMs may be used. They shall conform to industry standards used in the United States. All data shall be provided in English.

1.8.2 Disk or CD-ROM Labels

The Contractor shall affix a permanent exterior label to each diskette and CD-ROM submitted. The label shall indicate in English, the QCS file name, full contract number, contract name, project location, data date, name and telephone number of person responsible for the data.

1.8.3 File Names

The Government will provide the file names to be used by the Contractor with the QCS software.

1.9 MONTHLY COORDINATION MEETING

The Contractor shall update the QCS database each workday. At least monthly, the Contractor shall generate and submit an export file to the Government with schedule update and progress payment request. As required in Contract Clause "Payments", at least one week prior to submittal, the Contractor shall meet with the Government representative to review the planned progress payment data submission for errors and omissions. The Contractor shall make all required corrections prior to Government acceptance of the export file and progress payment request. Payment requests accompanied by incomplete or incorrect data submittals will be returned. The Government will not process progress payments until an

acceptable QCS export file is received.

1.10 NOTIFICATION OF NONCOMPLIANCE

The Contracting Officer will notify the Contractor of any detected noncompliance with the requirements of this specification. The Contractor shall take immediate corrective action after receipt of such notice. Such notice, when delivered to the Contractor at the work site, shall be deemed sufficient for the purpose of notification.

-- End of Section --

SECTION TABLE OF CONTENTS

DIVISION 01 - GENERAL REQUIREMENTS

SECTION 01330

SUBMITTAL PROCEDURES

01/04

PART 1 GENERAL

1.1 DEFINITIONS
1.1.1 Submittal
1.1.2 Submittal Descriptions (SD)
1.1.3 Approving Authority
1.1.4 Work
1.2 SUBMITTALS
1.3 SUBMITTAL CLASSIFICATION
1.3.1 Government Approved
1.3.2 Information Only
1.4 APPROVED SUBMITTALS
1.5 DISAPPROVED SUBMITTALS
1.6 WITHHOLDING OF PAYMENT
1.7 GENERAL
1.8 SUBMITTAL REGISTER
1.9 SCHEDULING
1.10 TRANSMITTAL FORM (ENG FORM 4025)
1.11 SUBMITTAL PROCEDURES
1.11.1 Procedures
1.11.2 Deviations
1.12 CONTROL OF SUBMITTALS
1.13 GOVERNMENT APPROVED SUBMITTALS
1.14 INFORMATION ONLY SUBMITTALS
1.15 STAMPS

-- End of Section Table of Contents --

SECTION 01330

SUBMITTAL PROCEDURES
01/04

PART 1 GENERAL

1.1 DEFINITIONS

1.1.1 Submittal

Contract Clauses "FAR 52.236-5, Material and Workmanship," paragraph (b) and "FAR 52.236-21, Specifications and Drawings for Construction," paragraphs (d), (e), and (f) apply to all "submittals."

1.1.2 Submittal Descriptions (SD)

Submittals requirements are specified in the technical sections. Submittals are identified by SD numbers and titles as follows.

SD-01 Preconstruction Submittals

Certificates of insurance.
Surety bonds.
List of proposed subcontractors.
List of proposed products.
Construction Progress Schedule.
Submittal register.
Schedule of prices.
Health and safety plan.
Work plan.
Quality control plan.
Environmental protection plan.

SD-03 Product Data

Catalog cuts, illustrations, schedules, diagrams, performance charts, instructions and brochures illustrating size, physical appearance and other characteristics of materials or equipment for some portion of the work.

Samples of warranty language when the contract requires extended product warranties.

SD-04 Samples

Physical examples of materials, equipment or workmanship that illustrate functional and aesthetic characteristics of a material or product and establish standards by which the work can be judged.

Color samples from the manufacturer's standard line (or custom color samples if specified) to be used in selecting or approving colors for the project.

Field samples and mock-ups constructed on the project site establish standards by which the ensuring work can be judged. Includes

assemblies or portions of assemblies which are to be incorporated into the project and those which will be removed at conclusion of the work.

SD-06 Test Reports

Report signed by authorized official of testing laboratory that a material, product or system identical to the material, product or system to be provided has been tested in accord with specified requirements. (Testing must have been within three years of date of contract award for the project.)

Report which includes findings of a test required to be performed by the Contractor on an actual portion of the work or prototype prepared for the project before shipment to job site.

Report which includes finding of a test made at the job site or on sample taken from the job site, on portion of work during or after installation.

Investigation reports.

Daily checklists.

Final acceptance test and operational test procedure.

1.1.3 Approving Authority

Office authorized to approve submittal.

1.1.4 Work

As used in this section, on- and off-site construction required by contract documents, including labor necessary to produce submittals, construction, materials, products, equipment, and systems incorporated or to be incorporated in such construction.

1.2 SUBMITTALS

Government approval is required for submittals with a "G" designation; submittals not having a "G" designation are for information only or as otherwise designated. When used, a designation following the "G" designation identifies the office that will review the submittal for the Government. The following shall be submitted in accordance with Section 01330 SUBMITTAL PROCEDURES:

SD-01 Preconstruction Submittals

Submittal Register; G

1.3 SUBMITTAL CLASSIFICATION

Submittals are classified as follows:

1.3.1 Government Approved

Government approval is required for extensions of design, critical materials, deviations, equipment whose compatibility with the entire system must be checked, and other items as designated by the Contracting Officer. Within the terms of the Contract Clause entitled "Specifications and Drawings for Construction," they are considered to be "shop drawings."

1.3.2 Information Only

All submittals not requiring Government approval will be for information only. They are not considered to be "shop drawings" within the terms of the Contract Clause referred to above.

1.4 APPROVED SUBMITTALS

The Contracting Officer's approval of submittals shall not be construed as a complete check, but will indicate only that the genre al method of construction, materials, detailing and other information are satisfactory. Approval will not relieve the Contractor of the responsibility for any error which may exist, as the Contractor under the Contractor Quality Control (CQC) requirements of this contract is responsible for dimensions, the design of adequate connections and details, and the satisfactory construction of all work. After submittals have been approved by the Contracting Officer, no resubmittal for the purpose of substituting materials or equipment will be considered unless accompanied by an explanation of why a substitution is necessary.

1.5 DISAPPROVED SUBMITTALS

The Contractor shall make all corrections required by the Contracting Officer and promptly furnish a corrected submittal in the form and number of copies specified for the initial submittal. If the Contractor considers any correction indicated on the submittals to constitute a change to the contract, a notice in accordance with the Contract Clause "Changes" shall be given promptly to the Contracting Officer.

1.6 WITHHOLDING OF PAYMENT

Payment for materials incorporated in the work will not be made if required approvals have not been obtained.

1.7 GENERAL

The Contractor shall make submittals as required by the specifications. The Contracting Officer may request submittals in addition to those specified when deemed necessary to adequately describe the work covered in the respective sections. Units of weights and measures used on all submittals shall be the same as those used in the contract drawings. Each submittal shall be complete and in sufficient detail to allow ready determination of compliance with contract requirements. Prior to submittal, all items shall be checked and approved by the Contractor's Quality Control (CQC System Manager and each item shall be stamped, signed, and dated by the CQC System Manager indicating action taken. Proposed

deviations from the contract requirements shall be clearly identified. Submittals shall include items such as: Contractor's, manufacturer's, or fabricator's drawings; descriptive literature including (but not limited to) catalog cuts, diagrams, operating charts or curves; test reports; test cylinders; samples; O&M manuals (including parts list); certifications; warranties; and other such required submittals. Submittals requiring Government approval shall be scheduled and made prior to the acquisition of the material or equipment covered thereby. Samples remaining upon completion of the work shall be picked up and disposed of in accordance with manufacturer's Material Safety Data Sheets (MSDS) and in compliance with existing laws and regulations.

1.8 SUBMITTAL REGISTER

At the end of this section is a submittal register showing items of equipment and materials for which submittals are required by the specifications; this list may not be all inclusive and additional submittals may be required. The Contractor shall maintain a submittal register for the project in accordance with Section 01312A QUALITY CONTROL SYSTEM (QCS). The Government will provide the initial submittal register in electronic format. Thereafter, the Contractor shall maintain a complete list of all submittals, including completion of all data columns. Dates on which submittals are received and returned by the Government will be included in its export file to the Contractor. The Contractor shall track all submittals.

1.9 SCHEDULING

Submittals covering component items forming a system or items that are interrelated shall be scheduled to be coordinated and submitted concurrently. Certifications to be submitted with the pertinent drawings shall be so scheduled. Adequate time (a minimum of 10 calendar days exclusive of mailing time) shall be allowed and shown on the register for review and approval. No delay damages or time extensions will be allowed for time lost in late submittals.

1.10 TRANSMITTAL FORM (ENG FORM 4025)

The sample transmittal form (ENG Form 4025) attached to this section shall be used for submitting both Government approved and information only submittals in accordance with the instructions on the reverse side of the form. These forms will be furnished to the Contractor. This form shall be properly completed by filling out all the heading blank spaces and identifying each item submitted. Special care shall be exercised to ensure proper listing of the specification paragraph and/or sheet number of the contract drawings pertinent to the data submitted for each item.

1.11 SUBMITTAL PROCEDURES

Submittals shall be made as follows:

1.11.1 Procedures

Submittals shall be mailed to:

Stan Fujimoto
Los Angeles Project Office
645 N. Durfee Ave.
El Monte, CA 91733

Tel (626)401-4084
Fax (626)401-4020

1.11.2 Deviations

For submittals which include proposed deviations requested by the Contractor, the column "variation" of ENG Form 4025 shall be checked. The Contractor shall set forth in writing the reason for any deviations and annotate such deviations on the submittal. The Government reserves the right to rescind inadvertent approval of submittals containing unnoted deviations.

1.12 CONTROL OF SUBMITTALS

The Contractor shall carefully control his procurement operations to ensure that each individual submittal is made on or before the Contractor scheduled submittal date shown on the approved "Submittal Register."

1.13 GOVERNMENT APPROVED SUBMITTALS

Upon completion of review of submittals requiring Government approval, the submittals will be identified as having received approval by being so stamped and dated. Four copies of the submittal will be retained by the Contracting Officer and two copies of the submittal will be returned to the Contractor.

1.14 INFORMATION ONLY SUBMITTALS

Normally submittals for information only will not be returned. Approval of the Contracting Officer is not required on information only submittals. The Government reserves the right to require the Contractor to resubmit any item found not to comply with the contract. This does not relieve the Contractor from the obligation to furnish material conforming to the plans and specifications; will not prevent the Contracting Officer from requiring removal and replacement of nonconforming material incorporated in the work; and does not relieve the Contractor of the requirement to furnish samples for testing by the Government laboratory or for check testing by the Government in those instances where the technical specifications so prescribe.

1.15 STAMPS

Stamps used by the Contractor on the submittal data to certify that the submittal meets contract requirements shall be similar to the following:

CONTRACTOR

(Firm Name)

_____ Approved

_____ Approved with corrections as noted on submittal data and/or attached sheets(s).

SIGNATURE: _____

TITLE: _____

DATE: _____

-- End of Section --

SUBMITTAL REGISTER

CONTRACT NO.

TITLE AND LOCATION
Maintenance Dredging - Ventura Harbor

CONTRACTOR

ACTIVITY NO	TRANSMITTAL NO	SPEC SECT	DESCRIPTION ITEM SUBMITTED	PARAGRAPH #	CLASSIFICATION	GOVT OR A/E REVWR	CONTRACTOR: SCHEDULE DATES			CONTRACTOR ACTION			APPROVING AUTHORITY					MAILED TO CONTR/ DATE RCD FRM APPR AUTH	REMARKS
							SUBMIT	APPROVAL NEEDED BY	MATERIAL NEEDED BY	ACTION CODE	DATE OF ACTION	DATE FWD TO APPR AUTH/ DATE RCD FROM CONTR	DATE FWD TO OTHER REVIEWER	DATE RCD FROM OTH REVIEWER	ACTION CODE	DATE OF ACTION		
(a)	(b)	(c)	(d)	(e)	(f)		(g)	(h)	(i)	(j)	(k)	(l)	(m)	(n)	(o)	(p)	(q)	(r)
		01200	SD-01 Preconstruction Submittals															
			Site Safety Health Plan	1.13.1	G													
			Activity Hazards Safety Analysis	1.13.2	G													
			Work and Storage Areas Plan	1.20	G													
		01330	SD-01 Preconstruction Submittals															
			Submittal Register	1.8	G													
		01355	SD-01 Preconstruction Submittals															
			Environmental Protection Plan	1.5	G													
		01451	SD-01 Preconstruction Submittals															
			Project Schedule	3.11	G													
			Contractor Quality Control Plan	3.2.1	G													
			(QCP)															
		02020	SD-01 Preconstruction Submittals															
			Dredge and Placement Plan	3.1	G													
			SD-03 Product Data															
			Dredge Disposal Records	3.2.4														
			SD-04 Samples															
			Sediment Samples	3.7														
			SD-06 Test Reports															
			Daily Report of Operations	3.12														

TRANSMITTAL OF SHOP DRAWINGS, EQUIPMENT DATA, MATERIAL SAMPLES, OR MANUFACTURER'S CERTIFICATES OF COMPLIANCE *(Read instructions on the reverse side prior to initiating this form)*	DATE	TRANSMITTAL NO.

SECTION I - REQUEST FOR APPROVAL OF THE FOLLOWING ITEMS *(This section will be initiated by the contractor)*

TO:	FROM:	CONTRACT NO.	CHECK ONE: ☐ THIS IS A NEW TRANSMITTAL ☐ THIS IS A RESUBMITTAL OF TRANSMITTAL_____
SPECIFICATION SEC. NO. *(Cover only one section with each transmittal)*	PROJECT TITLE AND LOCATION		CHECK ONE: THIS TRANSMITTAL IS FOR FIO ☐ GOVT. APPROVAL ☐

ITEM NO. *a.*	DESCRIPTION OF ITEM SUBMITTED *(Type size, model number/etc.)* *b.*	MFG OR CONTR. CAT., CURVE DRAWING OR BROCHURE NO. *(See instruction no. 8)* *c.*	NO. OF COPIES *d.*	CONTRACT REFERENCE DOCUMENT: SPEC. PARA. NO. *e.*	CONTRACT REFERENCE DOCUMENT: DRAWING SHEET NO. *f.*	FOR CONTRACTOR USE CODE *g.*	VARIATION *(See instruction No. 6)* *h.*	FOR CE USE CODE *i.*

REMARKS

I certify that the above submitted items have been reviewed in detail and are correct and in strict conformance with the contract drawings and specifications except as other wise stated.

_____

NAME AND SIGNATURE OF CONTRACTOR

SECTION II - APPROVAL ACTION

ENCLOSURES RETURNED *(List by Item No.)*	NAME, TITLE AND SIGNATURE OF APPROVING AUTHORITY	DATE

INSTRUCTIONS

1. Section I will be initiated by the Contractor in the required number of copies.

2. Each transmittal shall be numbered consecutively in the space provided for "Transmittal No.". This number, in addition to the contract number, will form a serial number for identifying each submittal. For new submittals or resubmittals mark the appropriate box; on resubmittals, insert transmittal number of last submission as well as the new submittal number.

3. The "Item No." will be the same "Item No." as indicated on ENG FORM 4288-R for each entry on this form.

4. Submittals requiring expeditious handling will be submitted on a separate form.

5. Separate transmittal form will be used for submittals under separate sections of the specifications.

6. A check shall be placed in the "Variation" column when a submittal is not in accordance with the plans and specifications--also, a written statement to that effect shall be included in the space provided for "Remarks".

7. Form is self-transmittal, letter of transmittal is not required.

8. When a sample of material or Manufacturer's Certificate of Compliance is transmitted, indicate "Sample" or "Certificate" in column c, Section I.

9. U.S. Army Corps of Engineers approving authority will assign action codes as indicated below in space provided in Section I, column i to each item submitted. In addition they will ensure enclosures are indicated and attached to the form prior to return to the contractor. The Contractor will assign action codes as indicated below

THE FOLLOWING ACTION CODES ARE GIVEN TO ITEMS SUBMITTED

A -- Approved as submitted.

B -- Approved, except as noted on drawings.

C -- Approved, except as noted on drawings. Refer to attached sheet resubmission required.

D -- Will be returned by separate correspondence.

E -- Disapproved (See attached).

F -- Receipt acknowledged.

FX-- Receipt acknowledged, does not comply as noted with contract requirements.

G -- Other *(Specify)*

10. Approval of items does not relieve the contractor from complying with all the requirements of the contract plans and specifications.

SECTION TABLE OF CONTENTS

DIVISION 01 - GENERAL REQUIREMENTS

SECTION 01355

ENVIRONMENTAL PROTECTION

02/02

PART 1 GENERAL

1.1 REFERENCES
1.2 DEFINITIONS
1.3 SUBMITTALS
1.4 ENVIRONMENTAL PROTECTION REQUIREMENTS
1.4.1 Protection of Features
1.4.2 Permits
1.4.3 Special Environmental Requirements
1.4.4 Environmental Assessment of Contract Deviations
1.5 ENVIRONMENTAL PROTECTION PLAN
1.5.1 Laws, Regulations, and Permits
1.5.2 Spill Control Plan
1.5.3 Recycling and Waste Minimization Plan
1.5.4 Contaminant Prevention Plan
1.5.5 Debris Management Plan
1.5.6 Environmental Monitoring

PART 2 PRODUCTS (NOT APPLICABLE)

PART 3 EXECUTION

3.1 SPECIAL ENVIRONMENTAL PROTECTION REQUIREMENTS
3.1.1 Vegetation Protection
3.1.2 Disposal of Solid Wastes
3.1.3 Disposal of Contractor Generated Hazardous Wastes
3.1.4 Fuels and Lubricants
3.2 HISTORICAL, ARCHAEOLOGICAL, AND CULTURAL RESOURCES
3.2.1 Known Historic, Archaeological, and Cultural Resources
3.2.2 Discovered Historic, Archaeological, and Cultural Resources
3.3 PROTECTION OF WATER RESOURCES
3.3.1 Monitoring of Water Areas Affected by Construction Activities
3.3.2 Floating Debris
3.3.3 Other Discharges
3.3.4 Stream Crossings
3.4 PROTECTION OF FISH AND WILDLIFE RESOURCES
3.4.1 Marine Mammals
3.4.2 Construction Window
3.4.3 Incidental Take of Wildlife
3.4.4 Biological Observations / Beach Restrictions
3.5 PROTECTION OF AIR RESOURCES
3.5.1 Construction Activities
3.5.2 Air Quality Management District
3.5.3 Particulates
3.5.4 Odors

3.5.5 Other Air Protection Commitments
3.6 NOISE
3.7 INSPECTION
3.8 MAINTENANCE OF POLLUTION CONTROL FACILITIES
3.9 TRAINING OF CONTRACTOR PERSONNEL

-- End of Section Table of Contents --

SECTION 01355

ENVIRONMENTAL PROTECTION
02/02

PART 1 GENERAL

1.1 REFERENCES

The publications listed below form a part of this specification to the extent referenced. The publications are referred to in the text by basic designation only.

CODE OF FEDERAL REGULATIONS (CFR)

36 CFR 800.11	Properties Discovered During Implementation of an Undertaking
40 CFR 261	Identification and Listing of Hazardous Waste

ENGINEERING MANUALS (EM)

EM 385-1-1	(2003) U.S. Army Corps of Engineers Safety and Health Requirements Manual

1.2 DEFINITIONS

Environmental pollution and damage is defined as the presence of chemical, physical, or biological elements or agents that adversely affect human health or welfare; unfavorably alter ecological balances of plant or animal communities of importance to human life; affect other species of importance to man; or degrade the environment from an aesthetic,recreational, cultural or historic perspective. Environmental protection is the prevention/control of pollution and habitat disruption that may occur during construction. The control of environmental pollution and damage requires consideration of air, water, land, biological and cultural resources; and includes management of visual aesthetics; noise; solid, chemical, gaseous, and liquid waste; radiant energy and radioactive materials; and other pollutants.

1.3 SUBMITTALS

Government approval is required for all submittals with a "G" designation; submittals not having a "G" designation are for information only. The following shall be submitted in accordance with Section 01330 SUBMITTAL PROCEDURES:

SD-01 Preconstruction Submittals

Environmental Protection Plan; G

1.4 ENVIRONMENTAL PROTECTION REQUIREMENTS

The Contractor shall comply with all applicable Federal, State, and local laws and regulations. The Contractor shall provide environmental protective measures and procedures to prevent and control pollution, limit habitat disruption, and correct environmental damage that occurs during construction.

1.4.1 Protection of Features

This section supplements the Contract Clause PROTECTION OF EXISTING VEGETATION, STRUCTURES, EQUIPMENT, UTILITIES, AND IMPROVEMENTS. The Contractor shall prepare a list of features requiring protection under the provisions of the contract clause which are not specially identified on the drawings as environmental features requiring protection. The Contractor shall protect those environmental features, indicated specially on the drawings, in spite of interference which their preservation may cause to the Contractor's work under the contract.

1.4.2 Permits

This section supplements the Contractor's responsibility under the contract clause PERMITS AND RESPONSIBILITIES. The Government has not obtained any permits for this project with the exception of the California Coastal Commission (CCC) and California Regional Water Quality Control Board (CRWQCB) permits.

The Ventura Port District (VPD) has obtained an air quality permit from the air pollution control district. If the Contractor intends to use this permit, the Contractor must coordinate with the Ventura Port District and comply with the terms and conditions of this permit. Otherwise, the Contractor must obtain all necessary air quality permits prior to commencement of work. It is the Contractor's responsibility to obtain all other necessary permits and abide by the conditions set forth within each document. If there is a conflict among the conditions, the Contractor shall request clarification from the Corps.

1.4.3 Special Environmental Requirements

The Contractor shall comply with the special environmental requirements listed in paragraphs 3.4 and 3.5. These special environmental requirements are an outgrowth of environmental commitments made by the Government during the project development.

1.4.4 Environmental Assessment of Contract Deviations

The contract specifications have been prepared to comply with the special conditions and mitigation measures of an environmental nature which were established during the planning and development of this project. The Contractor is advised that deviations from the drawings or specifications (e.g., proposed alternate borrow areas, placement areas, staging areas, alternate access routes, scheduling delays, etc.) could result in the requirement for the Government to reanalyze the project from an environmental standpoint. Deviations from the construction methods and procedures indicated by the plans and specifications which may have an environmental impact will require an extended review, processing, and approval time by the Government. The Contracting Officer reserves the right to disapprove alternate methods, even if they are more cost effective, if the Contracting Officer determines that the proposed

alternate method will have an adverse environmental impact.

1.5 ENVIRONMENTAL PROTECTION PLAN

Within twenty (20) calendar days of Contract Award, the Contractor shall submit an Environmental Protection Plan for review and acceptance by the Contracting Officer. The Contractor shall incorporate Government comments into the final Environmental Protection Plan within 15 days after receipt of comments from the Government.

Acceptance is conditional and is predicated upon satisfactory performance during construction. The Government reserves the right to require the Contractor to make changes in the Environmental Protection Plan or operations if the Contracting Officer determines that environmental protection requirements are not being met.

The plan shall detail the actions which the Contractor shall take to comply with all applicable Federal, State, and local laws and regulations concerning environmental protection and pollution control and abatement, as well as the additional specific requirements of this contract. The Contractor shall address each topic at a level of detail equal to the environmental issue and required construction task(s). No physical work at the site shall begin prior to acceptance of the Contractor's plan or an interim plan covering the work to be performed. The Environmental Protection Plan shall include, but not be limited to, the following:

1.5.1 Laws, Regulations, and Permits

The Contractor shall provide, as part of the Environmental Protection Plan, a list of all Federal, State, and local laws, regulations, and permits concerning environmental protection, pollution control, and abatement that are applicable to the Contractor's proposed operation and the requirements imposed by those laws, regulations, and permits. Permits obtained by the Contractor shall be attached to, and specific conditions included in the Environmental Protection Plan.

1.5.2 Spill Control Plan

The Contractor shall include, as part of the Environmental Protection Plan, a Spill Control Plan. The Spill Control Plan shall include the procedures, instructions, and reports to be used in the event of an unforeseen spill of a substance regulated by the Emergency Response and Community Right-to-Know Act or regulated under State or local laws or regulations. The Spill Control Plan supplements the requirements of EM 385-1-1. This plan shall include as a minimum:

a. The name of the individual who will be responsible for implementing and supervising the containment and cleanup.

b. Training requirements for Contractor's personnel and methods of accomplishing the training.

c. A list of materials and equipment to be immediately available at the job site, tailored to cleanup work of the potential hazard(s) identified.

d. The names and locations of suppliers of containment materials and locations of additional fuel oil recovery, cleanup, restoration, and

material-placement equipment available in case of an unforeseen spill emergency.

e. The methods and procedures to be used for expeditious contaminant cleanup.

f. The name of the individual who will report any spills or hazardous substance releases and who will follow up with complete documentation. This individual shall immediately notify the Contracting Officer in addition to the legally required Federal, State, and local reporting channels (including the National Response Center 1-800-424-8802) if a reportable quantity spill occurs. The plan shall contain a list of the required reporting channels and current telephone numbers.

1.5.3 Recycling and Waste Minimization Plan

The Contractor shall submit a Recycling and Waste Minimization Plan as a part of the Environmental Protection Plan. The plan shall detail the Contractor's actions to comply with the following recycling and waste minimization requirements:

a. The Contractor shall participate in State and local government sponsored recycling programs to reduce the volume of solid waste materials at the source.

b. The Contractor shall collect glass bottles, aluminum cans, and paper at the job site for recycling.

1.5.4 Contaminant Prevention Plan

As a part of the Environmental Protection Plan, the Contractor shall prepare a contaminant prevention statement identifying potentially hazardous substances to be used on the job site and intended actions to prevent accidental or intentional introduction of such materials into the air, water, or ground. The Contractor shall detail provisions to be taken to meet Federal, State, and local laws and regulations regarding the storage and handling of these materials.

1.5.5 Debris Management Plan / Non-Hazardous Solid Waste Diversion Report

As a part of the Environmental Protection Plan, the Contractor shall prepare a Debris Management Plan identifying methods and locations for solid waste disposal. The Debris Management Plan shall include sources and expected types of debris, debris separation and retrieval methods, and debris disposal methods.

1.5.6 Environmental Monitoring

The Contractor shall include in the plan the details of environmental monitoring requirements under the laws and regulations and a description of how this monitoring will be accomplished. The Contractor shall also include in the plan the name of the individual(s) performing the environmental monitoring.

PART 2 PRODUCTS (NOT APPLICABLE)

PART 3 EXECUTION

3.1 SPECIAL ENVIRONMENTAL PROTECTION REQUIREMENTS

3.1.1 Vegetation Protection / Landscape

The Contractor shall thoroughly clean all construction equipment and vehicles at the prior job site in a manner that ensures all residual soil is removed and that egg deposits from plant pests are not present. The Contractor shall consult with the USDA Plant Protection and Quarantine (USDA - PPQ) jurisdictional office for additional cleaning requirements that may be necessary.

3.1.2 Disposal of Solid Wastes

Solid waste is rubbish, debris, waste materials, garbage, and other discarded solid materials excluding clearing debris and hazardous waste as defined in following paragraphs. Solid waste shall be placed in containers and disposed on a regular schedule. All handling and disposal shall be conducted in such a way as to prevent spillage and contamination. The Contractor shall transport all solid waste off Government property and dispose in compliance with Federal, State, and local requirements.

3.1.3 Disposal of Contractor Generated Hazardous Wastes

Hazardous wastes are hazardous substances as defined in 40 CFR 261, or as defined by applicable State and local regulations. Hazardous waste generated by construction activities shall be removed from the work area and be disposed in compliance with Federal, State, and local requirements. The Contractor shall segregate hazardous waste from other materials and wastes, and shall protect it from the weather by placing it in a safe, covered location; precautionary measures against accidental spillage such as berming or other appropriate measures shall be taken. Hazardous waste shall be removed from Government property within 60 days. Hazardous waste shall not be dumped onto the ground, into storm sewers or open water courses, or into the sanitary sewer system.

3.1.4 Fuels and Lubricants

Fueling and lubrication of equipment and motor vehicles shall be conducted in a manner that affords the maximum protection against spills and evaporation. Lubricants and waste oil to be discarded shall be stored in marked corrosion-resistant containers and recycled or disposed in accordance with Federal, State, and local laws and regulations.

3.2 HISTORICAL, ARCHAEOLOGICAL, AND CULTURAL RESOURCES

3.2.1 Known Historic, Archaeological, and Cultural Resources

There are no known historic, archaeological, or cultural resources within the Contractor's work area.

3.2.2 Discovered Historic, Archaeological, and Cultural Resources

If during construction activities, items are observed that may have historic or archaeological value (e.g., anchors, shipwrecks, Native

American human remains or associated objects , etc.), such observations shall be reported immediately to the Contracting Officer so that the appropriate authorities may be notified and a determination made as to their significance and what, if any, special disposition of the finds should be made. The Contractor shall cease all activities that may result in impact to these resources until the requirements of 36 CFR 800.11, Discovery of Properties During Implementation of an Undertaking, are met. The Contractor shall prevent his employees from trespassing on, removing, or otherwise disturbing such resources.

3.3 PROTECTION OF WATER RESOURCES

The Contractor shall keep construction activities under surveillance, management, and control to avoid pollution of surface and ground waters. The Contractor shall stay within the boundaries of the identified construction zones. All dredging and fill activities shall remain within the boundaries specified in the plans. There shall be no dumping of any material in the marine environment which includes fill or material outside of the project area or within any adjacent aquatic community. Environmentally sensitive areas, such as estuaries, shall be avoided.

3.3.1 Monitoring of Water Areas Affected by Construction Activities

The Ventura Port District (VPD) will monitor water quality during dredging operations. The Contractor is to cooperate to the maximum extent practicable with this water quality monitoring effort by providing coordination between construction personnel and the VPD's water quality monitoring personnel.

3.3.2 Floating Debris

During the performance of the work, the Contractor shall institute and enforce procedures to prevent spills and floating debris from fouling the local waters and beaches. Should these procedures fail, the Contractor shall promptly clean up all spills and debris. At the end of each work shift, loose materials on adjoining structures and debris in the water and on the beach shall be removed by the Contractor and disposed of off site.

3.3.3 Other Discharges

Should the Contractor lose, dump, throw overboard, sink or misplace material, plant, machinery appliance, or cause pollution of the waters, the Contractor shall give immediate notice to the Contracting Officer and, if required shall boom, buoy or otherwise mark the location of the incident until the obstruction or pollution problem is removed. Should the Contractor refuse, neglect or delay compliance with these requirements, the necessary removal and cleanup may be deducted from the monies due or to become due to the Contractor.

3.3.4 Stream Crossings

Stream crossings shall be controlled during construction. Crossings shall provide movement of materials, vehicles or equipment which do not violate water pollution control standards of the federal, State, regional and local Governments. The Contractor shall not interfere with tidal circulation and fresh water flows into and through the mouth of the Santa Clara River. Beach placement operations shall not extend within 60 meters of the river, and the dredge discharge pipe outlet on McGrath State Beach will be

directed south, away from the river. Operational boundaries shall be clearly marked. If recommendations resulting from the California's Department of Parks and Recreation (CDPR) Santa Clara Estuary natural resources management study regarding the Santa Clara River mouth sand spit are at variance with Corps practices for placement pipeline protection, then re-coordination and evaluation of pipeline protection measures would be made.

3.4 PROTECTION OF FISH AND WILDLIFE RESOURCES

The Contractor shall keep construction activities under surveillance, management, and control to minimize interference with, disturbance to, and damage of fish, wildlife and plants including their habitat. The Contractor shall be responsible for the protection of threatened and endangered animal and plant species including their habitat in accordance with federal, state, regional, and local laws and regulations. Endangered or protected species known to frequent the project area and their respective nesting season include:

California least tern	01 April through 15 September
California grunion	March through mid-September
Western snowy plover	01 April through 15 September

3.4.1 Marine Mammals

Personnel shall not harass any marine mammals, fish, or waterfowl.

3.4.2 Construction Window

No dredging shall occur between March 15 and September 15 without written authorization from the Contracting Officer.

3.4.3 Incidental Take of Wildlife

The Contractor shall report any incidental take (dead or injured species) immediately to the Contracting Officer. The Contracting Officer shall consult with U.S. Fish and Wildlife Service immediately in the event of incidental take in the form of direct mortality through accidental death of a California least tern, western snowy plover, tidewater goby, or California brown pelican. Operations may be stopped if it is suspected that the impact of the taking causes an irreversible and adverse impact on the species.

3.4.4 Biological Observations / Beach Restrictions

a. In order to avoid covering or removing portions of the wrack line which provides foraging habitat for snowy plovers, beach recontouring during and following pipeline removal, shall be limited to the footprint of the pipeline. Combing of the beach following pipeline removal shall not be allowed.

b. In order to minimize disturbance of snowy plovers on State Park's Property at McGrath State Beach (south of the Santa Clara Estuary) and at South Beach, vehicle trips and equipment staging/movement will be limited to the installation, maintenance, and the removal of the discharge pipeline

and facilities and trips to man the beach discharge operations. All routine inspections should be conducted on foot while on State Parks Property.

c. During pipeline installation and removal, a qualified snowy plover monitor will walk ahead of the vehicle(s) and equipment to assure that all snowy plovers are out of harm's way before the vehicle(s) or equipment can proceed. Qualified monitors will be those individuals who attend the on-site plover training that will be provided by either the Ventura Port District, the Corps or State Parks.

d. The dredging discharge pipeline shall not cross the sand dunes at South Beach or McGrath State Beach, nor shall it disturb the existing sand dunes or vegetation on either beach.

3.5 PROTECTION OF AIR RESOURCES

3.5.1 Construction Activities

Special management techniques as set out below shall be implemented to control air pollution by the construction activities. These techniques supplement the requirements of Federal, State, and local laws and regulations, and the safety requirements under this Contract. If any of the following techniques conflict with the requirements of Federal, State, or local laws or regulations, or safety requirements under this contract, then those requirements shall be followed in lieu of the following.

The Contractor shall keep construction activities under surveillance, management and control to minimize pollution of air resources.

3.5.2 Air Quality Management District

All activities, equipment, processes, and work operated or performed by the Contractor in accomplishing the specified construction shall be in strict accordance with the Ventura County Air Pollution Control District (VCAPCD) permit requirements, State of California Air Resources Board (ARB), and all Federal emission and performance laws and standards.

3.5.3 Particulates

Airborne particulates, including dust particles from construction activities, processing, and preparation of materials, shall be controlled at all times, including weekends, holidays and hours when work is not in progress. The Contractor shall maintain all excavations, stockpiles within or outside the project boundaries free from particulates which would exceed local air pollution standards pursuant with the VCAPCD permit. The Contractor mush have sufficient competent equipment available to accomplish this task. Particulate control shall be performed as the work proceeds and whenever a particulate nuisance or hazard occurs.Burning will not be allowed on the project site unless specified in other sections of the specifications or authorized in writing by the Contracting Officer. The specific date, time, location, and manner of burning shall be subject to approval.

3.5.4 Odors

Odors shall be controlled at all times for all construction activities, processing and preparation of materials.

3.5.5 Other Air Protection Commitments

a. Properly tune and maintain all construction equipment. Retard injection timing of diesel-powered equipment by 2 degrees when feasible.

b. Use California Air Resources Board (ARB) reformulated diesel fuel in off-road equipment during construction.

c. Encourage employees to carpool.

3.6 NOISE

a. The Contractor shall designate a disturbance coordinator responsible for responding to noise complaints. His/her name and telephone number shall be clearly posted at the construction site. It is the responsibility of the disturbance coordinator to respond to complaints, determine the cause, and implement measures to mitigate the noise impact as well as notify the Contracting Officer of any complaints received and action taken.

The disturbance coordinator shall maintain in a log of complaints with the following information: Name of caller
Phone # and address of caller
Date and time of call
Caller's complaint, and the response to the caller.

b. All internal combustion powered equipment shall be equipped with properly operating mufflers and kept in a proper state of tune to alleviate back-fires. Engines, if exposed, shall be fitted with protective shrouds to reduce motor noise.

c. All portable and support equipment shall be located as far as possible from any sensitive areas.

d. The Contractor shall use, where feasible, electricity from the local power grid to avoid the use of portable generators.

3.7 INSPECTION REQUIREMENTS / FOLLOW UP ACTIONS

If the Contracting Officer notifies the Contractor in writing of any observed noncompliance with contract requirements or Federal, State, or local laws, regulations, or permits, the Contractor shall inform the Contracting Officer of proposed corrective action and take such action to correct the noncompliance. If the Contractor fails to comply promptly, the Contracting Officer may issue an order stopping all or part of the work until satisfactory corrective action is taken. No time extensions will be granted or costs or damages allowed to the Contractor for any such suspension.

The Contractor shall promptly inform the Contracting Officer of the Environmental Protection Plan's non-compliance activities and proposed action to be taken to correct such activities.

3.8 MAINTENANCE OF POLLUTION CONTROL FACILITIES

The Contractor shall maintain all constructed pollution control facilities

and portable pollution control devices for the duration of the Contract or for the length of time construction activities create the particular pollutant.

3.9 TRAINING OF CONTRACTOR PERSONNEL

Contractor personnel shall be trained in environmental protection and pollution control. The Contractor shall conduct environmental protection/pollution control meetings for all Contractor personnel. The training and meeting agenda shall include methods of detecting and avoiding pollution, familiarization with pollution standards, both statutory and contractual, installation and care of facilities (vegetative covers, etc.), and instruments required for monitoring purposes to ensure adequate and continuous environmental protection/pollution control. Anticipated hazardous or toxic chemicals or wastes, and other regulated contaminants, shall also be discussed. Other items to be discussed shall include recognition and protection of archaeological sites and artifacts, as well as protection of any threatened or endangered species and designated critical habitat.

-- End of Section --

SECTION TABLE OF CONTENTS

DIVISION 01 - GENERAL REQUIREMENTS

SECTION 01420

SOURCES FOR REFERENCE PUBLICATIONS

12/04

1.1 REFERENCES
1.2 ORDERING INFORMATION

-- End of Section Table of Contents --

SECTION 01420

SOURCES FOR REFERENCE PUBLICATIONS
12/04

****
NOTE: This guide specification provides a listing of organizations whose publications are referenced in other sections of the specifications.

Comments and suggestions on this guide specification are welcome and should be directed to the technical proponent of the specification. A listing of technical proponents, including their organization designation and telephone number, is on the Internet.

Recommended changes to a UFGS should be submitted as a Criteria Change Request (CCR).

Use of electronic feedback is encouraged.
****

****
NOTE: In accordance with FAR 11.201, identification of sources for obtaining documents referenced in the specificatioins must be provided in contract documents.
****

1.1 REFERENCES

Various publications are referenced in other sections of the specifications to establish requirements for the work. These references are identified in each section by document number, date and title. The document number used in the citation is the number assigned by the standards producing organization, (e.g. ASTM B 564 Nickel Alloy Forgings). However, when the standards producing organization has not assigned a number to a document, an identifying number has been assigned for reference purposes.

1.2 ORDERING INFORMATION

****
NOTE: Information regarding standards producing organizations was in agreement with information contained in the Unified Master Reference List (UMRL) as of date of this guide specification.

This paragraph is automatically edited by removal of those organizations not included in other sections of the project specifications when SpecsIntact (Reconcile Addresses item from the Print menu) is use for job processing. However, if publications of organizations in addition to those listed below are used in the project, such additional organizations must be added to this paragraph.
****

The addresses of the standards publishing organizations whose documents are referenced in other sections of these specifications are listed below, and if the source of the publications is different from the address of the sponsoring organization, that information is also provided. Documents listed in the specifications with numbers which were not assigned by the

standards producing organization should be ordered from the source by title rather than by number.

ASTM INTERNATIONAL (ASTM)
100 Barr Harbor Drive, P.O. Box C700
West Conshohocken, PA 19428-2959
Ph: 610-832-9500
Fax: 610-832-9555
E-mail: service@astm.org
Internet: http://www.astm.org

CODE OF FEDERAL REGULATIONS (CFR)

Order from:
Government Printing Office
Washington, DC 20402
Ph: 202-512-1800
Fax: 202-275-7703
Internet: http://www.pls.com:8001/his/cfr.html

FEDERAL SPECIFICATIONS (FS)

Order from:
General Services Administration
Federal Supply Service Bureau
470 L'Enfant Plaza, S.W.
Washington, DC 20407
Ph: 202-619-8925
Fax: 202-619-8978
Internet: http://pub.fss.gsa.gov/

U.S. ARMY CORPS OF ENGINEERS (USACE)
Order CRD-C DOCUMENTS from:
U.S. Army Engineer Waterways Experiment Station
ATTN: Technical Report Distribution Section, Services Branch, TIC
3909 Halls Ferry Road
Vicksburg, MS 39180-6199
Ph: 601-634-2664
Fax: 601-634-2388
E-mail: mtc-info@erdc.usace.army.mil
Internet: http://www.wes.army.mil/SL/MTC/handbook.htm

Order Other Documents from:
USACE Publications Depot
Attn: CEIM-IM-PD
2803 52nd Avenue
Hyattsville, MD 20781-1102
Ph: 301-394-0081
Fax: 301-394-0084
E-mail: pubs-army@usace.army.mil
Internet: http://www.usace.army.mil/publications
or http://www.hnd.usace.army.mil/techinfo/engpubs.htm

U.S. DEPARTMENT OF COMMERCE (DOC)
1401 Constitution Avenue, NW
Washington, DC 20230
Ph: 202-482-4883
Internet: http://www.commerce.gov/

Order Publications From:
National Technical Information Service (NTIS)
5285 Port Royal Road
Springfield, VA 22161
Ph: 703-605-6585
Fax: 703-605-6900
E-mail: info@ntis.gov
Internet: http://www.ntis.gov

-- End of Section --

SECTION TABLE OF CONTENTS

DIVISION 01 - GENERAL REQUIREMENTS

SECTION 01451

CONTRACTOR QUALITY CONTROL

01/03

PART 1 GENERAL

1.1 REFERENCES
1.2 SUBMITTALS
1.3 PAYMENT

PART 2 PRODUCTS (NOT APPLICABLE)

PART 3 EXECUTION

3.1 GENERAL
3.2 QUALITY CONTROL PLAN
3.2.1 General
3.2.2 Content of the CQC Plan
3.2.3 Acceptance of Plan
3.2.4 Notification of Changes
3.3 COORDINATION MEETING
3.4 QUALITY CONTROL ORGANIZATION
3.4.1 General
3.4.2 CQC System Manager
3.4.3 CQC Personnel
3.4.4 Additional Requirement
3.4.5 Organizational Changes
3.5 SUBMITTALS
3.6 CONTROL
3.6.1 Preparatory Phase
3.6.2 Initial Phase
3.6.3 Follow-up Phase
3.6.4 Additional Preparatory and Initial Phases
3.7 TESTS
3.7.1 Testing Procedure
3.7.2 Testing Laboratories
3.7.2.1 Capability Check
3.7.2.2 Capability Recheck
3.7.3 On-Site Laboratory
3.7.4 Furnishing or Transportation of Samples for Testing
3.8 COMPLETION INSPECTION
3.9 DOCUMENTATION
3.10 NOTIFICATION OF NONCOMPLIANCE
3.11 PROJECT SCHEDULE

-- End of Section Table of Contents --

SECTION 01451

CONTRACTOR QUALITY CONTROL
01/03

PART 1 GENERAL

1.1 REFERENCES

The publications listed below form a part of this specification to the extent referenced. The publications are referred to in the text by basic designation only.

ASTM INTERNATIONAL (ASTM)

ASTM D 3740	(2001) Minimum Requirements for Agencies Engaged in the Testing and/or Inspection of Soil and Rock as Used in Engineering Design and Construction
ASTM E 329	(2002) Agencies Engaged in the Testing and/or Inspection of Materials Used in Construction

1.2 SUBMITTALS

Government approval is required for submittals with a "G" designation. The following shall be submitted in accordance with Section 01330 SUBMITTAL PROCEDURES:

SD-01 Preconstruction Submittals

Project Schedule; G.

Contractor Quality Control Plan (QCP); G.

1.3 PAYMENT

Separate payment will not be made for providing and maintaining an effective Quality Control program, and all costs associated therewith shall be included in the applicable unit prices or lump-sum prices contained in the PRICING SCHEDULE.

PART 2 PRODUCTS (NOT APPLICABLE)

PART 3 EXECUTION

3.1 GENERAL

The Contractor is responsible for quality control and shall establish and maintain an effective quality control system in compliance with the Contract Clause titled "INSPECTION OF CONSTRUCTION." The quality control

system shall consist of plans, procedures, and organization necessary to produce an end product that complies with the contract requirements. The system shall cover all construction operations, both onsite and offsite, and shall be keyed to the proposed construction sequence. The project superintendent will be held responsible for the quality of work on the job and is subject to removal by the Contracting Officer for non-compliance with quality requirements specified in the contract. The project superintendent in this context shall mean the individual with the responsibility for the overall management of the project including quality and production.

3.2 QUALITY CONTROL PLAN

3.2.1 General

The Contractor shall furnish for review by the Government, not later than 15 days after receipt of notice to proceed, the Contractor Quality Control Plan (QCP) proposed to implement the requirements of the Contract Clause titled "INSPECTION OF CONSTRUCTION." The plan shall identify personnel, procedures, control, instructions, test, records, and forms to be used. The Government will consider an interim plan for the first 15 days of operation. Construction will be permitted to begin only after acceptance of the CQC Plan or acceptance of an interim plan applicable to the particular feature of work to be started. Work outside of the features of work included in an accepted interim plan will not be permitted to begin until acceptance of a CQC Plan or another interim plan containing the additional features of work to be started.

3.2.2 Content of the CQC Plan

The CQC Plan shall include, as a minimum, the following to cover all construction operations, both onsite and offsite, including work by subcontractors, fabricators, suppliers, and purchasing agents:

a. A description of the quality control organization, including a chart showing lines of authority and acknowledgment that the CQC staff shall implement the three phase control system for all aspects of the work specified. The staff shall include a CQC System Manager who shall report to the project superintendent.

b. The name, qualifications (in resume format), duties, responsibilities, and authorities of each person assigned a CQC function.

c. A copy of the letter to the CQC System Manager signed by an authorized official of the firm which describes the responsibilities and delegates sufficient authorities to adequately perform the functions of the CQC System Manager, including authority to stop work which is not in compliance with the contract. The CQC System Manager shall issue letters of direction to all other various quality control representatives outlining duties, authorities, and responsibilities. Copies of these letters shall also be furnished to the Government.

d. Procedures for scheduling, reviewing, certifying, and managing submittals, including those of subcontractors, offsite fabricators, suppliers, and purchasing agents. These procedures shall be in accordance with Section 01330 SUBMITTAL PROCEDURES.

e. Control, verification, and acceptance testing procedures for each specific test to include the test name, specification paragraph requiring test, feature of work to be tested, test frequency, and person responsible for each test. (Laboratory facilities will be approved by the Contracting Officer.)

f. Procedures for tracking preparatory, initial, and follow-up control phases and control, verification, and acceptance tests including documentation.

g. Procedures for tracking construction deficiencies from identification through acceptable corrective action. These procedures shall establish verification that identified deficiencies have been corrected.

h. Reporting procedures, including proposed reporting formats.

i. A list of the definable features of work. A definable feature of work is a task that is separate and distinct from other tasks, has separate control requirements, and may be identified by different trades or disciplines, or it may be work by the same trade in a different environment. Although each section of the specifications may generally be considered as a definable feature of work, there are frequently more than one definable features under a particular section. This list will be agreed upon during the coordination meeting.

3.2.3 Acceptance of Plan

Acceptance of the Contractor's plan is required prior to the start of construction. Acceptance is conditional and will be predicated on satisfactory performance during the construction. The Government reserves the right to require the Contractor to make changes in his CQC Plan and operations including removal of personnel, as necessary, to obtain the quality specified.

3.2.4 Notification of Changes

After acceptance of the CQC Plan, the Contractor shall notify the Contracting Officer in writing of any proposed change. Proposed changes are subject to acceptance by the Contracting Officer.

3.3 COORDINATION MEETING

After the Pre-construction Conference, before start of construction, and prior to acceptance by the Government of the CQC Plan, the Contractor shall meet with the Contracting Officer or Authorized Representative and discuss the Contractor's quality control system. The CQC Plan shall be submitted for review a minimum of 7 calendar days prior to the Coordination Meeting. During the meeting, a mutual understanding of the system details shall be developed, including the forms for recording the CQC operations, control activities, testing, administration of the system for both onsite and offsite work, and the interrelationship of Contractor's Management and control with the Government's Quality Assurance. Minutes of the meeting shall be prepared by the Government and signed by both the Contractor and the Contracting Officer. The minutes shall become a part of the contract file. There may be occasions when subsequent conferences will be called by either party to reconfirm mutual understandings and/or address deficiencies in the CQC system or procedures which may require corrective action by the

Contractor.

3.4 QUALITY CONTROL ORGANIZATION

3.4.1 General

The requirements for the CQC organization are a CQC System Manager and sufficient number of additional qualified personnel to ensure contract compliance. The Contractor shall provide a CQC organization which shall be at the site at all times during progress of the work and with complete authority to take any action necessary to ensure compliance with the contract. All CQC staff members shall be subject to acceptance by the Contracting Officer.

3.4.2 CQC System Manager

The Contractor shall identify as CQC System Manager an individual within the onsite work organization who shall be responsible for overall management of CQC and have the authority to act in all CQC matters for the Contractor. The CQC System Manager shall be a graduate engineer, graduate architect, or a graduate of construction management, with a minimum of 5 years construction experience on construction similar to this contract. This CQC System Manager shall be on the site at all times during construction and shall be employed by the prime Contractor. The CQC System Manager shall be assigned as System Manager but may have duties as project superintendent in addition to quality control. An alternate for the CQC System Manager shall be identified in the plan to serve in the event of the System Manager's absence. The requirements for the alternate shall be the same as for the designated CQC System Manager.

3.4.3 CQC Personnel

In addition to CQC personnel specified elsewhere in the contract, the Contractor shall provide as part of the CQC organization specialized personnel to assist the CQC System Manager for the following areas: civil and dredging. These individuals may be employees of the prime or subcontractor; be responsible to the CQC System Manager; be physically present at the construction site during work on their areas of responsibility; have the necessary education and/or experience in accordance with the experience matrix listed herein. These individuals may perform other duties but must be allowed sufficient time to perform their assigned quality control duties as described in the Quality Control Plan.

Experience Matrix

	Area	Qualifications
a.	Civil	Graduate Civil Engineer with 2 years experience in the type of work being performed on this project or technician with 5 years related experience
b.	Dredging	Experienced engineer or technician with 10 years of marine dredging experience

3.4.4 Additional Requirement

In addition to the above experience and education requirements the CQC

System Manager shall have completed the course entitled "Construction Quality Management For Contractors". This course is periodically offered, contact U.S. Army Corps of Engineers, Los Angeles District, Emmauel Molina, at (213) 452-3384 for information.

3.4.5 Organizational Changes

The Contractor shall maintain the CQC staff at full strength at all times. When it is necessary to make changes to the CQC staff, the Contractor shall revise the CQC Plan to reflect the changes and submit the changes to the Contracting Officer for acceptance.

3.5 SUBMITTALS

Submittals shall be made as specified in Section 01330 SUBMITTAL PROCEDURES. The CQC organization shall be responsible for certifying that all submittals are in compliance with the contract requirements.

3.6 CONTROL

Contractor Quality Control is the means by which the Contractor ensures that the construction, to include that of subcontractors and suppliers, complies with the requirements of the contract. At least three phases of control shall be conducted by the CQC System Manager for each definable feature of work as follows:

3.6.1 Preparatory Phase

This phase shall be performed prior to beginning work on each definable feature of work, after all required plans/documents/materials are approved/accepted, and after copies are at the work site. This phase shall include:

a. A review of each paragraph of applicable specifications.

b. A review of the contract drawings.

c. A check to assure that all materials and/or equipment have been tested, submitted, and approved.

d. Review of provisions that have been made to provide required control inspection and testing.

e. Examination of the work area to assure that all required preliminary work has been completed and is in compliance with the contract.

f. A physical examination of required materials, equipment, and sample work to assure that they are on hand, conform to approved shop drawings or submitted data, and are properly stored.

g. A review of the appropriate activity hazard analysis to assure safety requirements are met.

h. Discussion of procedures for controlling quality of the work including repetitive deficiencies. Document construction tolerances and workmanship standards for that feature of work.

i. A check to ensure that the portion of the plan for the work to be

performed has been accepted by the Contracting Officer.

j. Discussion of the initial control phase.

k. The Government shall be notified at least 24 hours in advance of beginning the preparatory control phase. This phase shall include a meeting conducted by the CQC System Manager and attended by the superintendent, other CQC personnel (as applicable), and the foreman responsible for the definable feature. The results of the preparatory phase actions shall be documented by separate minutes prepared by the CQC System Manager and attached to the daily CQC report. The Contractor shall instruct applicable workers as to the acceptable level of workmanship required in order to meet contract specifications.

3.6.2 Initial Phase

This phase shall be accomplished at the beginning of a definable feature of work. The following shall be accomplished:

a. A check of work to ensure that it is in full compliance with contract requirements. Review minutes of the preparatory meeting.

b. Verify adequacy of controls to ensure full contract compliance. Verify required control inspection and testing.

c. Establish level of workmanship and verify that it meets minimum acceptable workmanship standards. Compare with required sample panels as appropriate.

d. Resolve all differences.

e. Check safety to include compliance with and upgrading of the safety plan and activity hazard analysis. Review the activity analysis with each worker.

f. The Government shall be notified at least 24 hours in advance of beginning the initial phase. Separate minutes of this phase shall be prepared by the CQC System Manager and attached to the daily CQC report. Exact location of initial phase shall be indicated for future reference and comparison with follow-up phases.

g. The initial phase should be repeated for each new crew to work onsite, or any time acceptable specified quality standards are not being met.

3.6.3 Follow-up Phase

Daily checks shall be performed to assure control activities, including control testing, are providing continued compliance with contract requirements, until completion of the particular feature of work. The checks shall be made a matter of record in the CQC documentation. Final follow-up checks shall be conducted and all deficiencies corrected prior to the start of additional features of work which may be affected by the deficient work. The Contractor shall not build upon nor conceal non-conforming work.

3.6.4 Additional Preparatory and Initial Phases

Additional preparatory and initial phases shall be conducted on the same definable features of work if the quality of on-going work is unacceptable, if there are changes in the applicable CQC staff, onsite production supervision or work crew, if work on a definable feature is resumed after a substantial period of inactivity, or if other problems develop.

3.7 TESTS

3.7.1 Testing Procedure

The Contractor shall perform specified or required tests to verify that control measures are adequate to provide a product that conforms to contract requirements. Upon request, the Contractor shall furnish to the Government duplicate samples of test specimens for possible testing by the Government. Testing includes operation and/or acceptance tests when specified. The Contractor shall procure the services of a Corps of Engineers approved testing laboratory or establish an approved testing laboratory at the project site. The Contractor shall perform the following activities and record and provide the following data:

a. Verify that testing procedures comply with contract requirements.

b. Verify that facilities and testing equipment are available and comply with testing standards.

c. Check test instrument calibration data against certified standards.

d. Verify that recording forms and test identification control number system, including all of the test documentation requirements, have been prepared.

e. Results of all tests taken, both passing and failing tests, shall be recorded on the CQC report for the date taken. Specification paragraph reference, location where tests were taken, and the sequential control number identifying the test shall be given. If approved by the Contracting Officer, actual test reports may be submitted later with a reference to the test number and date taken. An information copy of tests performed by an offsite or commercial test facility shall be provided directly to the Contracting Officer. Failure to submit timely test reports as stated may result in nonpayment for related work performed and disapproval of the test facility for this contract.

3.7.2 Testing Laboratories

3.7.2.1 Capability Check

The Government reserves the right to check laboratory equipment in the proposed laboratory for compliance with the standards set forth in the contract specifications and to check the laboratory technician's testing procedures and techniques. Laboratories utilized for testing soils, concrete, asphalt, and steel shall meet criteria detailed in ASTM D 3740 and ASTM E 329.

3.7.2.2 Capability Recheck

If the selected laboratory fails the capability check, the Contractor will

be assessed a charge of $675.00 to reimburse the Government for each succeeding recheck of the laboratory or the checking of a subsequently selected laboratory. Such costs will be deducted from the contract amount due the Contractor.

3.7.3 On-Site Laboratory

The Government reserves the right to utilize the Contractor's control testing laboratory and equipment to make assurance tests and to check the Contractor's testing procedures, techniques, and test results at no additional cost to the Government.

3.7.4 Furnishing or Transportation of Samples for Testing

Samples of materials for test verification and acceptance testing will be tested at a commercial laboratory approved by the Contracting Officer. All cost for transporting of samples will be borne by the Contractor.

3.8 COMPLETION INSPECTION

At the completion of all work or any increment thereof established by a completion time stated in the Special Clause entitled "Commencement, Prosecution, and Completion of Work," or stated elsewhere in the specifications, the CQC Representative shall conduct an inspection of the work and develop a "punch list" of items which do not conform to the approved drawings and specifications. Such a list of deficiencies shall be included in the CQC documentation, as required by paragraph DOCUMENTATION below, and shall include the estimated date by which the deficiencies will be corrected. The CQC Representative or staff shall make a second inspection to ascertain that all deficiencies have been corrected and so notify the Government. These inspections and any deficiency corrections required by this paragraph will be accomplished within the time stated for completion of the entire work or any particular increment thereof if the project is divided into increments by separate dates.

3.9 DOCUMENTATION

The Contractor shall maintain current records providing factual evidence that required quality control activities and/or tests have been performed. These records shall include the work of subcontractors and suppliers and shall be on an acceptable form that includes, as a minimum, the following:

a. Contractor/subcontractor and their area of responsibility.

b. Operating plant/equipment with hours worked, idle, or down for repair.

c. Work performed each day, giving location, description, and by whom. When Network Analysis (NAS) is used, identify each phase of work performed each day by NAS activity number.

d. Test and/or control activities performed with results and references to specifications/drawings requirements. The control phase should be identified (Preparatory, Initial, Follow-up). List deficiencies noted along with corrective action.

e. Quantity of materials received at the site with statement as to acceptability, storage, and reference to specifications/drawings requirements.

f. Submittals reviewed, with contract reference, by whom, and action taken.

g. Off-site surveillance activities, including actions taken.

h. Job safety evaluations stating what was checked, results, and instructions or corrective actions.

i. Instructions given/received and conflicts in plans and/or specs.

j. Contractor's verification statement.

These records shall indicate a description of trades working on the project; the number of personnel working; weather conditions encountered; and any delays encountered. These records shall cover both conforming and deficient features and shall include a statement that equipment and materials incorporated in the work and workmanship comply with the contract. The original and one copy of these records in report form shall be furnished to the Government daily within 24 hours after the date covered by the report, except that reports need not be submitted for days on which no work is performed. As a minimum, one report shall be prepared and submitted for every 7 days of no work and on the last day of a no work period. All calendar days shall be accounted for throughout the life of the contract. The first report following a day of no work shall be for that day only. Reports shall be signed and dated by the CQC System Manager. The report from the CQC System Manager shall include copies of test reports and copies of reports prepared by all subordinate quality control personnel.

3.10 NOTIFICATION OF NONCOMPLIANCE

The Contracting Officer will notify the Contractor of any detected noncompliance with the foregoing requirements. The Contractor shall take immediate corrective action after receipt of such notice. Such notice, when delivered to the Contractor at the work site, shall be deemed sufficient for the purpose of notification. If the Contractor fails or refuses to comply promptly, the Contracting Officer may issue an order stopping all or part of the work until satisfactory corrective action has been taken. No part of the time lost due to such stop orders shall be made the subject of claim for extension of time or for excess costs or damages by the Contractor.

3.11 PROJECT SCHEDULE

Pursuant to the Contract Clause SCHEDULES FOR CONSTRUCTION CONTRACTS (52.236-15), the Contractor shall prepare and submit to the Contracting Officer for approval three copies of a practicable Project Schedule showing the order in which he proposes to perform the work, and the dates on which the Contractor contemplates starting and completing the several salient features of the work. A progress report, showing the progress of the work in relation to the project schedule, shall be submitted to the Contracting Officer not less than weekly. The project schedule shall be revised and resubmitted as needed, or whenever the actual progress is substantially different than the proposed schedule.

-- End of Section --

CONSTRUCTION QUALITY CONTROL REPORT
(SAMPLE)

CONTRACT NO. _____

HARBOR & PROJECT _____ CONTRACTOR _____

DATE _____ WEATHER _____ DREDGING CYCLE: _____

SEA CONDITION _____ SWELL/DIRECTION _____ TURBIDITY _____

PERIOD COVERED _____ DREDGE _____ MATERIAL _____

NO. & LOCATION OF DREDGE SAMPLES TAKEN: _____

QUANTITY

This period total _____

This period per pump hour _____

To date total _____

Advance _____ Depth after _____

Avg. Bank _____

CUT

Location _____

Cut No. _____ Sta. _____ To Sta. _____

Avg. Width_____ Depth before _____

FILL PIPELINE

LOCATION	QUANTITY TO DATE

Floating _____ Total _____

Submerged _____ Avg. Total _____

Shore _____

LABOR DREDGE INFORMATION

	# of Crew	Leverman
Shift #1		
Shift #2		
Shift #3		

*Pump Speed (RPM) _____

*Cutter RPM _____

*Cutter type _____

*Runner Diameter _____

*Applicable to cutter suction/suction dredging only.

DOWN TIME

TIME DOWN	TIME RESTART
	TOTAL

REASONS	TIME

EQUIPMENT _____

DAILY SOUNDINGS

	VERTICAL	HORIZONTAL
Minimum		
Maximum		
Average		

REMARKS _____

SUBMITTED BY: _____

SIGNED: _____

HYDRAULIC
DAILY REPORT

DREDGE _____ REPORT NO. _____

WEATHER _____ CONTRACT NO. _____

WIND _____ DATE _____

SEA _____ TIDE GAGE # _____

DREDGING CYCLE: _____ HORIZONTAL POS. _____

W O R K L O C A T I O N S K E T C H
(Include Dredge Advances, Stationing, & Channel Widths)

_____

_____

_____

ACTIVITY

Non-Effective Time (hours)	Today	To Date
1. Mob/demob		
2. New area move		
3. Traffic		
4. Weather		
5. Relocate Pipe		
6. Repair Pipe		
7. Handling Anchors		
8. Clearing Pump		
9. Clearing Pipe		
10. Clearing Cutter		
11. Clearing Suction Head		
12. Booster Offline		
13. Dredge Repair		
14. Survey Delay		
15. Other (see remarks)		
TOTALS		

Effective Time (hours)	Today	To Date
1. Dredge/booster		
2. Other (see remarks)		
TOTALS		

Production	Unit	Today	To Date
1. Avg. cut width	ft.		
2. Avg. cut depth	ft.		
3. Advance	ft.		
4. Pipe Change	ft.		

REMARKS

_____

_____

_____

_____

_____

_____

_____

OPERATOR'S LOG FOR
Dredging/Booster (in line)

DREDGING CYCLE: _____

ACTIVITY	TIME START	TIME STOP	DIFF.	ACTIVITY	TIME START	TIME STOP	DIFF.
TOTAL HOURS				TOTAL HOURS			

REMARKS

CLAMSHELL
DAILY REPORT

DREDGE _____ REPORT NO. _____

WEATHER _____ CONTRACT NO. _____

WIND _____ DATE _____

SEA _____ TIDE GAGE # _____

DREDGING CYCLE: _____ HORIZONTAL POS. _____

W O R K L O C A T I O N S K E T C H
(Include Dredge Advances, Stationing, & Channel Widths)

_____

_____

_____

A C T I V I T Y

Non-Effective Time (hours)	Today	To Date
1. Mob/demob		
2. New area move		
3. Traffic		
4. Weather		
5. Scow Change		
6. Scow Wind		
7. Scow Tug		
8. Scow Repair		
9. Dredge Maintenance		
10. Dredge Repair		
11. Survey Delay		
12. Other(see remarks)		
Non-Effective Totals		

Effective Time (hours)		Today	To Date
1. Dredging			
2. Other (see remarks)			
Effective Totals			
Production	Unit	Today	To Date
1. Avg. cut width	ft.		
2. Avg. cut depth	ft.		
3. Area	sq.ft.		
4. Travel time	hrs.		

S C O W S

ID	START LOAD TIME	STOP LOAD TIME	TOTAL LOAD HRS	TODAY CY	TO DATE CY
		TOTALS			

DREDGING CYCLE: _____ DATE: _____

Hopper Dredge Daily Record						Location						DREDGE			HOPPER CAPACITY
LOAD NO.	CUT NO.	PUMPS		MINUTES		STATIONS FROM -------- TO	TOTAL LENGTH OF LOAD	AT DUMP			DUMP LOCATION		SETTLED SOLIDS	YARDAGE METER READING	MATE:
		START	STOP	PUMPING	TURNING			ARRIVED	LEFT	DEPTH	NORTHING	EASTING			
1	2	3	4	5	6	7	8	9	10	11	12	13	14	15	REMARKS:

TOTALS															
AVERAGES															

NPP Form 62 (Test) 1983

SECTION TABLE OF CONTENTS

DIVISION 02 - SITE CONSTRUCTION

SECTION 02000

MOBILIZATION AND DEMOBILIZATION

02/99

PART 1 GENERAL

1.1 SUBMITTALS
1.2 MOBILIZATION AND DEMOBILIZATION

PART 2 PRODUCTS (Not Applicable)

PART 3 EXECUTION (Not Applicable)

-- End of Section Table of Contents --

SECTION 02000

MOBILIZATION AND DEMOBILIZATION
02/99

PART 1 GENERAL

1.1 SUBMITTALS

Government approval is required for submittals with a "G" designation. The following shall be submitted in accordance with Section 01330 SUBMITTAL PROCEDURES:

None

1.2 MOBILIZATION AND DEMOBILIZATION

Mobilization and Demobilization shall include transporting the dredge and all items of attendant plant to the site of the work, setting up the dredge and other equipment, and laying of pipelines and otherwise placing the entire plant in condition for effective dredging. If Contractor utilizes beach placement, the trenching and laying of buried pipe and other associated work will be part of mobilization and demobilization. Upon completion of each dredge cycle, the Contractor's plant and equipment shall be removed from the site.

PART 2 PRODUCTS (Not Applicable)

PART 3 EXECUTION (Not Applicable)

-- End of Section --

SECTION TABLE OF CONTENTS

DIVISION 02 - SITE CONSTRUCTION

SECTION 02020

DREDGING

02/99

PART 1 GENERAL

1.1 REFERENCES
1.2 SUBMITTALS
1.3 REQUIRED WORK
1.4 AVOIDANCE OF EXISTING CONSTRUCTION
1.4.1 Existing Breakwaters and Jetties
1.4.2 Existing Rock Sill
1.5 CHARACTER OF MATERIALS

PART 2 PRODUCTS (NOT APPLICABLE)

PART 3 EXECUTION

3.1 DREDGE AND PLACEMENT PLAN
3.2 PLACEMENT OF DREDGED MATERIAL
3.2.1 General
3.2.2 Beach Disposal
3.2.3 Emergency Surf Zone Discharge Method
3.2.4 Nearshore Disposal
3.3 ELECTRONIC POSITIONING SYSTEM FOR NEARSHORE AND OFFSHORE PLACEMENT
3.3.1 EPS/DGPS Configuration
3.3.2 Shore-Based Control
3.3.3 Placement Vessel Location
3.3.4 Calibration
3.3.5 Backup Equipment
3.4 ADDITIONAL MONITORING
3.4.1 Hopper and Hydraulic Dredges
3.4.2 Barges and Scows
3.5 DREDGE QUANTITIES FOR PAST 4 DREDGE CYCLES
3.6 OVERDEPTH AND SIDE SLOPES
3.6.1 Overdepth
3.6.2 Side Slopes
3.6.3 Excessive Dredging
3.6.4 Advance Maintenance Depth
3.7 SAMPLING OF MATERIAL
3.8 CONTRACTOR'S SURVEYS
3.8.1 Survey Data
3.8.2 Sounding Data Standards
3.8.3 Positioning System
3.8.4 Survey Firm Acceptance
3.8.5 Data Processing
3.9 PRE-DREDGE AND FINAL SURVEYS
3.10 METHOD OF SOUNDINGS
3.11 SHOALING

3.12 REPORTING REQUIREMENT
3.13 FINAL EXAMINATION AND ACCEPTANCE

-- End of Section Table of Contents --

SECTION 02020

DREDGING
02/99

PART 1 GENERAL

1.1 REFERENCES

The publications listed below form a part of this specification to the extent referenced. The publications are referred to in the text by basic designation only.

U.S. ARMY CORPS OF ENGINEERS (USACE)

EM 1110-1-1003	(July 2003) NAVSTAR Global Positioning System Surveying
EM 1110-2-1003	(January 2002) Hydrographic Surveying

1.2 SUBMITTALS

Government approval is required for all submittals with a "G" designation. The following shall be submitted in accordance with SECTION 01330 SUBMITTAL PROCEDURES:

SD-01 Preconstruction Submittals

Dredge and Placement Plan G

SD-03 Product Data

Dredge Disposal Records

SD-04 Samples

Sediment Samples

SD-06 Test Reports

Daily Report of Operations

1.3 REQUIRED WORK

In the area to be dredged, all materials shall be removed and disposed of as indicated. Should material which cannot be removed without unreasonable methods be encountered, the Contractor shall remove all overlying material which in the judgment of the Contracting Officer Representative can be removed. Nothing in this paragraph shall be construed as prohibiting the removal of excepted material by special means at prices agreed upon and approved in accordance with the CONTRACT CLAUSE: DIFFERING SITE CONDITIONS. The dredging area shall be dredged to the indicated depths below mean lower low water (MLLW). Debris shall become the property of the Contractor and shall be removed from the site.

1.4 AVOIDANCE OF EXISTING CONSTRUCTION

1.4.1 Existing Breakwaters and Jetties

The Contractor shall conduct dredging operations in such a manner as to prevent undermining of the breakwaters and jetties. Excessive or unnecessary dredging may result in an unstable condition at the toe of the structures. The Contractor shall strictly adhere to the indicated dredging template when working near any structures, and shall be responsible for repairing any damage which may result from failure to comply with the requirements of these specifications.

1.4.2 Existing Rock Sill

The Contractor shall conduct dredging operations in the rock sill area in such a manner to prevent damages to the existing rock sill. See plans for details of rock sill. Excessive or unnecessary dredging may result in an unstable condition causing damages to this structure. The Contractor shall strictly adhere to the indicated dredging template when working near this structure, and shall be responsible for repairing any damage which may result from failure to comply with the requirements of these specifications.

1.5 CHARACTER OF MATERIALS

The material to be removed consists primarily of sandy silt, silty sand, sand and some gravel and cobbles. Tree stumps, tires, and other debris which has been deposited within the project boundaries since the last dredging cycle may also be encountered. See tables 1 and 2 at the end of this section for gradation information from sediment samples collected during the 2002 and 2004 dredge cycles.

PART 2 PRODUCTS (NOT APPLICABLE)

PART 3 EXECUTION

3.1 DREDGE AND PLACEMENT PLAN

The Contractor shall submit a Dredge and Placement Plan indicating the methods and equipment he proposes to use to dredge, position and dispose, reposition, and maintain the placement areas during construction operations. The plan shall be submitted to the Contracting Officer for approval, for each dredge cycle of this contract, at least 20 days prior to start of dredging operations and shall also include, as a minimum, the following information:

a. Method of dredging and disposal, and name of dredge.

b. Order of dredging operations and layout of dredging and disposal areas, and anticipated time progress of dredging on a weekly basis.

c. Layout of all buoys, anchors, pipelines, and ancillary equipment. Time frame for placement of pipeline (if pipeline is used).

d. Method and equipment for transporting and placing material at the placement site, and equipment that will be working on the beach.

e. For beach disposal, a beach disposal plan indicating the targeted

beach width of the fill, the starting point of the fill, etc.

f. Scow dimensions and capacities, if applicable.

g. Lighting plan for night work.

h. Layout of dredge, including: dimensions; location of engines, fuel storage, electrical/transformer rooms; description of engine types and horsepower ratings, types and size of generating equipment, fuel storage capacity, and vertical clearance. A copy of this information shall be provided to the local fire fighting agency.

3.2 PLACEMENT OF DREDGED MATERIAL

3.2.1 General

Dredged material shall be transported and deposited within the disposal limits of the area indicated on the drawings and as specified herein after. Any dredged material that is deposited other than in the area indicated on the drawings, or as approved by the Contracting Officer, will not be included in the measurement and the Contractor may be required to remove such misplaced material and deposit it where directed at his own expense. Debris and other unsuitable materials encountered shall become the property of the Contractor and shall be removed from the site. The Contractor may elect to use the beach disposal site and/or the nearshore disposal site, but shall submit his plan in accordance with paragraph: Dredge and Placement Plan.

3.2.2 Beach Disposal

a. Placement Area. If the Contractor chooses to place material on the beach, then upon coordination with the Construction Representative and the Ventura Harbor District (who will in turn coordinate with the California Department of Parks and Recreation), acceptable material shall be deposited at the McGrath State Beach placement area. Material will only be deposited on South Beach during special circumstances as indicated in these specifications.

b. The Contractor shall provide necessary equipment to shape the beach during fill operations. Disposal operations shall be conducted in such a manner so as to capture the maximum amount of sand and to widen the beach in the most efficient manner.

Slotted discharge pipes, multiple discharge points or other approved means shall be employed to minimize loss of dredged material. Placement of material above the elevations indicated on the drawings will not be permitted.

c. At the end of the dredge cycle beach nourishment, the Contractor shall provide a 1-page report listing the beach nourishment information, to include but not be limited to:

* start and end positions of the beachfill
* width of the nourished beach
* start and end dates of beachfill construction
* significant events or problems encountered during the beachfill (i.e any storms that eroded the beach)

3.2.3 Emergency Surf Zone Discharge Method

a. In the event that placement at McGrath State Beach cannot be completed prior to the first predicted grunion run after March 15 of any year, the Contractor shall notify the Contracting Officer no later than February 20 of that year. The Contracting Officer reserves the right to refuse extension past March 15 of that year. In the event an extension is granted, a contingency plan shall be implemented. The contingency plan placement site may be along the South Beach between the South Beach groin and the mouth of the Santa Clara River. The exact location of this site will be determined by the Contracting Officer should the need arise.

b. If surf zone placement is implemented, the Contractor shall align the placement pipe so that surf-zone placement, rather than beach placement, shall be incorporated within a 150-meter-wide zone of operation. The 150-meter zone of operation will be fixed and flagged in the field by the Contracting Officer or his representative and appropriate agencies following late winter storms and prior to dredge placement. No impacts from heavy equipment (i.e.. paths of transit), pipes, or direct placement of dredged material shall exceed beyond this zone. The placement pipe and its alternate to backup outfall shall extend seaward of Mean Higher High Water (MHHW) and both shall be situated perpendicular to the ocean so that dredge material shall immediately run down the face of the beach. When mounding of dredged materials occurs in front of placement pipes, extensions shall be added onto the pipes to maintain discharge below MHHW in a seaward direction. Should excessive mounding occur and lateral movement of the pipes be required, such movement of pipes shall not result in pipes, heavy equipment (for moving pipes),or direct dredge material placement occurring outside of the fixed 150-meter-wide zone of operation. Grading to move sand mounds will be allowed within the zone of operation. If necessary, slotted or perforated pipes shall be used to extend the pipeline closer to the ocean in order to prevent erosion of sand mounds supporting the placement pipes. Location of the slotted pipes within the pipeline will be decided in the field and location selection will be based upon meeting the goal of ensuring the stability of the supporting mound of sand. The Contracting Officer Representative shall be notified prior to movement of any discharge pipes within the surf zone placement area. The locations are subject to the approval by the Contracting Officer Representative.

3.2.4 Nearshore Disposal

a. If the Contractor chooses nearshore disposal, then the dredge material shall be placed in the designated nearshore disposal area. The approximate location of the nearshore disposal area is indicated on the plans. Prior to the disposal of any material in the nearshore disposal area, the corners will be defined by the Contracting Officer. The Contractor shall be responsible for marking the corners of the disposal area with approved buoys and making periodic inspections of the buoy locations. The dredge material shall be deposited in such a manner so as to create a berm approximately parallel to the shoreline. The mound shall be located between the -4.0 and -8.0 meter MLLW contours.
Disposal in the nearshore disposal area shall advance only when operational technique, under keel clearance or equipment considerations permit safe operations.

b. Dredge Disposal Records: For nearshore disposal, the Contractor shall record disposal information. A spreadsheet shall be submitted to the Contracting Officer's Representative listing:

* disposal number;
* date;
* time at commencement and completion of disposal, recorded to the nearest minute;
* disposal area (i.e. Ventura nearshore);
* easting and northing of disposal;
* quantity of disposal (cubic meters);
* cumulative quantity;
* area from which the load was dredged (i.e. Station).

Dump#	Date	Time	Disposal Area	Easting	Northing	Qty	Cumulative Qty	Area Dredged (Station)

The spreadsheet shall be produced in Microsoft Excel and e-mailed to the Contracting Officer's Representative daily.

3.3 ELECTRONIC POSITIONING SYSTEM FOR NEARSHORE AND OFFSHORE PLACEMENT

The Contractor shall obtain, operate, and maintain a short range Electronic Positioning System (EPS) or Differential Global Positioning System (DGPS) for nearshore and offshore placement operations. This EPS or DGPS shall be established, operated, and maintained by the Contractor when placement is actively underway. The EPS or DGPS shall be capable of displaying and recording the placement vessel's location in the State Plane Coordinates System based on the California Lambert Conformal Projection System for Zone 5 (SPCS 83 Meters) at 30 second time intervals while traveling to or from the placement site and during placement operations. The EPS or DGPS shall be activated at least 1,000 meters from the placement site when transiting, and shall not be deactivated until at least 1,000 meters from the site on the return trip. Positional data shall be annotated for the time when actual dumping begins and ends and may be required to be taken at more frequent intervals than specified herein above. A record of each dump's positional data, automatically correlated with time, and annotated with date and eccentric distance measurement, if any, shall be submitted to the Contracting Officer as a part of the Daily Quality Control record. The Contractor shall provide access for the Contracting Officer to the EPS or DGPS equipment as part of the Government's quality assurance responsibility.

3.3.1 EPS/DGPS Configuration

The EPS or DGPS shall be similar, or equal, in design, performance, accuracy, operation characteristics, and frequency to equipment specified in the following technical materials:

COE EM 1110-1-1003 Navstar Global Positioning System Surveying
and COE EM 1110-2-1003 Hydrographic Surveying

It is emphasized that Differential GPS positioning techniques shall be used for GPS surveying and further emphasized that an EPS system with a low and medium frequency (long-range navigation system) will not comply with the above specifications. The complete system shall be subject to the approval of the Contracting Officer.

3.3.2 Shore-Based Control

The Contractor shall establish horizontal control necessary to locate

active and/or passive short range EPS or DGPS transmitter/receiver devices. Survey control shall meet 3rd Order, Class I accuracy standards in accordance with COE EM 1110-2-1003 "Hydrographic Surveying". The Contractor shall obtain all necessary permits, rights-of-entry, or leases required to operate and maintain shore-based electronic equipment on public/private property. The actual number of shore-based control points shall be determined by the Contractor and shall be determined by the operating characteristics of the approved system (i.e., circular). As a minimum, the EPS shall provide at least three redundant lines-of-position from the shore-based network, and for DGPS, ranges from 4 (minimum) or more satellites will be needed for 3-dimensional positioning. The shore-based control points shall be located such that the generated lines-of-position shall intersect at the final vessel location at not less than 40 degrees.

3.3.3 Placement Vessel Location

Except as specified herein after, electronic positioning data shall be received, displayed, and recorded on board the placement vessel. Positional data may be received, displayed, and recorded on a towing or other adjacent vessel provided the eccentric distance between the vessels is less than 30 meters and that the eccentric distance and bearings remain essentially constant for each successive placement operation. Eccentric distance measurements shall be computed by means of an electronic data transmitter/telemetry system. Gyro-radar distance/bearing measurements will not be permitted for eccentric distance measurements. Eccentric coordinates, if any, shall be clearly identified and computed on the hard copy positional record required under paragraph: Electronic Positioning System.

3.3.4 Calibration

Calibration techniques and calibration requirements (checklist) for DGPS shall conform to standard hydrographic surveying practice in accordance with COE EM 1110-2-1003, "Hydrographic Surveying". The Contractor shall be responsible for maintaining effective, accurate, and reliable EPS calibration, including periodic survey checks throughout the duration of the contract. Calibration records shall be submitted as part of the daily Quality Control records. Degradation in offshore positional accuracy during the course of this contract may cause a suspension of placement operations.

3.3.5 Backup Equipment

The Contractor shall provide and maintain the following backup equipment:

For EPS System:
- One shore control transmitter/receiving device.
- One line printer and/or plotter.
- One offshore guidance controller.
- One power supply.
- Spare parts kit for the receiver.

For GPS System:
- One Complete Differential GPS (DGPS) equipment and accessories.

In the event of a failure of the EPS or DGPS, the Contractor shall immediately notify the Contracting Officer.

3.4 ADDITIONAL MONITORING

3.4.1 Hopper and Hydraulic Dredges

The Contractor shall provide:

a. Continuous records of measurement of bulk density and mass flow rate with time, and location - cutterhead/draghead coordinates (horizontal and vertical). Data shall be recorded electronically and shall be made available in time increments as designated by the Contracting Officer and in either printed record or electronic format as designated by the Contracting Officer.

b. Records of continuous loading of hoppers, barges, or scows based on hull displacement (load charts).

These records shall be submitted to the Contracting Officer daily with the Quality Control Reports.

3.4.2 Barges and Scows

The Contractor shall provide a record of the measurements of the draft of the hull and freeboard of bins of each barge or scow when empty and prior to placement operations. Measurement for displacement shall be taken at each corner, on the outside of the barge or scow, immediately before the start of a placement operation. These records shall be submitted to the Contracting Officer daily with the Quality Control Reports.

3.5 DREDGE QUANTITIES FOR PAST 4 DREDGE CYCLES

Quantity of material available within the dredge prism for the previous 4 dredge cycles, computed from pre-dredge surveys, is shown in the following table.

Area	Available Quantity from Pre-Dredge Surveys (Cubic Meters)			
	Nov 2001	Jan 2003	Jan 2004	Jan 2005
A	27,844	17,034	20,976	16,537
B	39,747	39,157	26,785	27,227
C	26,541	16,092	18,850	15,349
D	88,898	95,516	53,291	41,601
E	25,723	19,840	11,265	7,678
F	854	144	585	9
G	199,249	198,005	125,934	47,637
H	92,241	88,597	61,088	21,199
I	88,150	83,921	85,945	65,261
TOTAL	589,247	588,306	404,719	242,498

3.6 OVERDEPTH AND SIDE SLOPES

3.6.1 Overdepth

To cover inaccuracies of the dredging process, a 0.6 meter allowable overdepth applies to this contract. Material dredged from below the allowable overdepth will not be estimated and will not be included in the

measurement of work. An overdepth allowance is applicable to Area A, and a portion of Area B as indicated on the plans.

3.6.2 Side Slopes

Material actually removed within limits approved by the Contracting Officer, shall provide for final side slopes not flatter than those indicated on the drawings and will be estimated and paid for. The Contractor may dredge material in original position or may dredge below the pay slope plane at the bottom of the slope to allow for sloughing of upslope material capable of falling into the cut (box dredge). However, material removed below any pay slope plane will not be estimated for payment. In computing the limiting amount of side slope dredging, the overdepth indicated on the drawings, measured vertically, will be used. The quantity of material to be paid for shall not be in excess of that originally lying above this limiting slope. Side slopes are given for pay purposes only and are not necessarily the angle of repose of the soil. Sloughing side slopes shall not be the basis for claims against the Government. End slopes, where indicated on the drawings, shall be treated in the same manner as side slopes.

Box cutting of side slopes will not be allowed near the breakwaters and jetties.

3.6.3 Excessive Dredging

Material taken from beyond the allowable overdepth limits may be deducted from the total amount dredged as excessive overdepth dredging, or excessive side-slopes dredging. Materials dredged from below the depth limit which result in extra costs shall be the responsibility of the Contractor. Nothing here shall be construed to prevent the inclusion in the measurement of material dredged for the removal of shoals performed in accordance with the applicable provisions of the paragraphs: FINAL EXAMINATION AND ACCEPTANCE or SHOALING.

3.6.4 Advance Maintenance Depth

For areas C, D, E, F, G, H, and I, and portions of area B as indicated on the plans, any material removed from below the advance maintenance depth (indicated on the drawings) will not be included in the measurement of work accomplished. Due to inaccuracies of the dredging process, the Contractor will only be required to remove material to within 0.6 meters above the advance maintenance dredge depth. However, any material removed to the advance maintenance dredge depth will be included in the measurement of work accomplished.

3.7 SAMPLING OF MATERIAL

The Contractor shall obtain, each dredge cycle, representative Sediment Samples at the discharge point as material is being discharged onto the beach, or in the case of a hopper dredge or clamshell-scow operation, as material is placed into the hopper bin or scow. The exact location and depth of each sample shall be as directed by the Contracting Officer during the dredging operation. A total of six samples for each dredge cycle shall be taken as follows:

Area	Number of Samples Required
Areas A, B, C, D and E	3
Areas F, G, H and I	3

The samples shall be taken at evenly spaced intervals of time and volume as each of the areas is dredged. Each sample (with free water removed) shall be at least one (1) liter or larger, and shall be placed in clear plastic bottles. The sample bottles shall be labeled in indelible ink with the sample number, date sampled, and name of person obtaining sample. Sample bottle lids shall be securely fastened to prevent spillage or leakage during shipment. Sample bottles shall be placed in a suitable shipping container with adequate cushioning to prevent breakage during shipment. The samples shall be delivered to the address specified herein below at weekly intervals, or at such other times as may be determined by the Contracting Officer.

A Dredge Sample Data Form with the description of the dredge cut location by coordinates and stationing, dredge cut elevation, placement location and description of where sample was taken, date, time, sample number, and the name of the person who collected the sample shall accompany each sample. The sample form shall be placed in a waterproof sealed plastic bag for protection during shipment. A copy of a sample form is provided at the end of this section.

A copy of the sample form shall be submitted to the Contracting Officer's Representative along with the transmittal form.

The Contractor shall notify the Contracting Officer's Representative 48 hours in advance of sample collection. Samples shall be delivered to:

U.S. Army Corps of Engineers
ATTN: Baseyard Soils Laboratory
645 North Durfee Avenue
South El Monte, CA 91733-4399
Attn: Art Moncayo Tel: (626) 401-4095

3.8 CONTRACTOR'S SURVEYS

3.8.1 Survey Data

Reference is made to SECTION 00800: SPECIAL CONTRACT REQUIREMENTS, QUANTITY SURVEYS, FAR 52.236-16 which requires payment based on Government surveys. Progress payments or evidence (condition surveys) supporting extreme weather (storm) related shoaling, will be based upon Contractor's hydrographic surveys. The Contractor's survey shall provide full coverage of an entire area, such as Area A, B, C, D, E, F, G, H, and I, for which progress payment or evidence of storm-related shoaling is being submitted.

It is further emphasized that only condition surveys supporting extreme weather (storm) - related shoaling will be considered for payment in addition to the government surveys, provided that the Contractor's surveys clearly show the condition before and after each shoaling event and the condition after removal of material from the shoaled area. Survey data which does not meet all applicable requirements and quality assurance verifications will not constitute a valid request for payment of shoaling.

Contractor's hydrographic surveys shall be performed electronically (automated) and the data shall be provided and submitted to the Government on an electronic media (IBM compatible, ASCII format) in delimited files of easting, northing, and depth (x,y,z), where the depth is indicated as negative if recorded below MLLW, the horizontal position is given in State Plane Coordinates System Based on the California Lambert Conformal Projection System for Zone 5 (SPCS 83 Meters). The first lines of the data

file will list the information as follows:

* Project Name (Ventura Harbor Maintenance Dredging)
* Surveyor's Name and Company
* Area Surveyed
* Type of Survey and Date of Survey (i.e. Pre-dredge, 10/22/2005)
* Vertical Datum
* Horizontal Datum
* Tide Gage Location

These first 7 lines will be preceded by an asterisk (*), which indicates a comment line.

A plot of soundings will accompany the x,y,z data and all data shall be collected and plotted in metric units (meters).

All survey data (x,y,z) files submitted to the government shall be compiled onto a single compact disc.

3.8.2 Sounding Data Standards

The Contractor's hydrographic surveys for progress payment or evidence supporting extreme(storm) weather-related shoaling shall meet or exceed the survey standards listed in EM 1110-2-1003 (Hydrographic Surveying). Surveys shall be in the State Plane Coordinate System of 1983 - meters (SPCS 83), Zone 5, State of California, and be performed by an independent hydrographic survey contractor with at least three (3) years of experience in hydrographic surveying of navigable channels and have either a current Land Surveyor's or a Professional Engineer's license, authorized to certify surveys in the State of California. The Hydrographic Surveyor firm selected by the Contractor must be approved by the Contracting Officer prior to performing surveys for this contract.

3.8.3 Positioning System

It is required that hydrographic surveys shall be conducted using an Automated Range-Azimuth Positioning System or Differential Global Positioning System (DGPS), with positional accuracy of +/- 3 meters (1 DRMS) or exceed the survey standards listed in EM 1110-1-1003 and EM 1110-2-1003 (Hydrographic Surveying) that is linked to an automated (digital) depth recording device capable of continuous logging of x,y,z positional data with depth measurement resolution to the nearest five-hundredths (5/100) of a meter. Digital depths shall be supplemented by analog depth records if survey is performed by single beam echosounder. Sounding lines shall be verified by crosslines at least 10 percent of the principal lines and along the centerline of channel. Distance between successive soundings (sounding interval) shall be no more than 2 meters. Soundings shall be reduced to sounding datum (Mean Lower Low Water) by using actual tides and other appropriate corrections resulting in an accuracy of +/- 0.2 meters from actual depth.

3.8.4 Survey Firm Acceptance

For the Contracting Officer to approve the selected survey firm, the Contractor must provide documentation indicating that modern electronic horizontal positioning and sounding system equipment will be used for the surveys, as well as documentation verifying the experience of the operators using the equipment. Typical information that will be required, as a minimum, includes the name, model, and year of manufacture of the

electronic equipment, the electronic frequencies of the horizontal positioning equipment and sounding equipment, and the manufacturer's stated positioning and sounding accuracies, and capability of the equipment proposed for usage. In addition, the Contractor must provide information that a safe and suitable vessel meeting U.S. Coast Guard requirements is available and will be used for operation in the waters where the surveys are to be performed. The Contractor shall submit credentials / qualifications as evidence that qualified, experienced staff are available and will be used for the operation of the vessel as well as for the electronic positioning and sounding equipment.

3.8.5 Data Processing

The Contractor shall use a Data Processing System to map the sounding data and calculate quantities. Reduced sounding data shall then be imported into the Data Processing System where cross-sections are compared to dredge templates and volume quantities are calculated. The software shall be capable of digital terrain modeling and shall produce, as a minimum, sounding sheets, cross section profiles, 3-dimensional area profiles, and quantity volume calculations using the Triangulated Irregular Network (TIN) method.

3.9 PRE-DREDGE AND FINAL SURVEYS

The Contractor shall notify the Contracting Officer not less than 15 calendar days prior to the scheduled commencement of dredging. The Government will then perform a pre-dredge survey based upon the Contractor's scheduled commencement date. For the post-dredge survey, the Contractor shall notify the Contracting Officer not less than ten (10) working days prior to completion of the entire work. The Government will perform the final survey as soon as possible after completion of the entire work, generally within 10 (ten) calendar days. All areas found to be in compliance with the contract requirements will be accepted and measured for payment in accordance with SECTION 01270 Measurement and Payment.

If the Government is unable to perform the final survey(s) due to the failure of the Contractor to complete the work in accordance with his prior notification, the Contracting Officer will charge the cost of the survey plant and standby labor, at $3,000.00 per day, to the Contractor. Preliminary data from the final Government survey will be available within ten (10) calendar days. If the preliminary survey data indicates that the dredged area is not at the required depth, the Contractor will be directed to resume dredging and to complete the work to project depth. Adjustment in cost for additional Government post-dredge surveys shall be as specified in paragraph: FINAL EXAMINATION AND ACCEPTANCE.

3.10 METHOD OF SOUNDINGS

The material removed will be measured by cubic meter in place, by means of soundings taken before and after dredging. The Government intends to perform pre-dredge and post-dredge surveys utilizing multi-beam swath methods. However, the Government reserves the right to take soundings by any methods, including: lead line, trigonometric leveling (total station)/differential leveling, 200 kHz single-beam acoustic methods, acoustic multi-beam swath methods. Results of soundings by any of these methods, singularly or in combination, will be the basis for payment. The Contractor has the option of being present when such soundings are made.

3.11 SHOALING

If, before the contract is completed, shoaling occurs in any section (area) previously accepted, including shoaling in the finished channel, because of the natural lowering of the side slopes or from sediments transported inside the project area, re-dredging at contract price, within the limit of available funds, may be done if agreeable to both the Contractor and the Contracting Officer.

3.12 REPORTING REQUIREMENT

The Contractor shall prepare and maintain a Daily Report of Operations and furnish copies thereof to the Contracting Officer's representative. The daily reports shall document dredging operations for all shifts in a 24-hour period. Further instruction on the preparation of the report will be furnished at a pre-construction conference. Copies of sample submittals are provided at the end of the Contractor's Quality Control section.

3.13 FINAL EXAMINATION AND ACCEPTANCE

As soon as practicable after the completion of the entire work, a final examination of the work will be conducted by the Contracting Officer. Should any shoals, lumps, or other lack of contract depth be disclosed by this examination, the Contractor will be required to remove same dredging at the contract rate for dredging. However, if the bottom is soft and the shoal areas are small and form no material obstruction to navigation, the removal of such shoal may be waived by the discretion of the Contracting Officer. The Contractor or his authorized representative will be notified when soundings are to be made, and will be permitted to accompany the survey party. When the area is found to be in a satisfactory condition, it will be accepted finally. Should more than two sounding operations by the Government over an area be necessary by reason of work for the removal of shoals disclosed at a prior sounding, the cost of such third and any subsequent sounding operations will be charged against the Contractor at the rate of $3,000.00 per day for each day in which the Government plant is engaged in sounding and/or is en route to or from the site or held at or near the said site for such operations.

Final acceptance of the whole or a part of the work and the deductions or corrections of deductions made thereon will not be reopened after having once been made, except on evidence of collusion, fraud, or obvious error, and the acceptance of a completed section shall not change the time of payment of the retained percentages of the whole or any part of the work.

Dredge Sample Data Form

VENTURA HARBOR MAINTENANCE DREDGING

Contract No.:_____ Sample No.:_____

Contractor Name:_____ Date:_____

Name of Dredge:_____ Time:_____

Type of Dredge: ___Clamshell ___Hopper ___Hydraulic Cutterhead ___other

If other, specify:_____

Cut Location

area: _____ northing: _____

station: _____ easting: _____

range: _____

elevation: _____

Placement Location

area: _____ northing: _____

station: _____ easting: _____

range: _____

elevation: _____

Sample Obtained By: _____

Sample Obtained From:_____

_____

_____

Note: A copy of this completed form shall accompany the sample when shipped to the laboratory for testing, a copy of this completed form shall be faxed to Jeremy Jackson at (213) 452-4248, and a copy to be provided to the Contracting Officer's Representative."

-- End of Section --

Table 1. Sample Data

Sample Designation	Date Sampled	Dredge Area	Northing	Easting	Elevation (m,MLLW)
2002 Dredge Grab Samples					
02-01	9-26-02	B	573,437.0	1,886,644.0	-10.1M
02-02	10-2-02	C	573,578.0	1,886,602.0	-10.1M
02-03	10-4-02	C	573,629.8	1,886,577.1	-8.4M
02-04	10-7-02	C	573,720.0	1,886,526.2	-8.4M
02-05	10-13-02	C	573,712.0	1,886,486.0	-6.8M
02-06	10-15-02	C	573,831.0	1,886,419.0	-5.7
02-07	10-22-02	C	573,899.0	1,886,260.0	-9.7M
02-08	10-25-02	C	573,779.0	1,886,608.0	-6.4M
02-09	10-28-02	C	573,772.0	1,886,606.0	-7.3M
02-10	10-30-02	C	573,844.0	1,886,533.0	-9.3M
02-11	11-6-02	C	573,949.7	1,886,567.2	-6.4M
02-12	11-8-02	C	573,689.0	1,886,697.0	-9.3M
02-13	11-13-02	D	573,833.2	1,886,669.0	-8.4M
02-14	11-21-02	C	573,759.2	1,886,890.0	-10.4M
02-15	11-25-02	A	573,602.0	1,886,890.0	-6.7M

Sample Designation	Date Sampled	Dredge Area	Northing	Easting	Elevation (m,MLLW)
2004 Dredge Grab Samples					
04-01	2/11/2004	D	583513	1882917.1	-12.2
04-02	2/13/2004	D	583341	1882857	-12.1
04-03	2/15/2004	E	583615.2	1882825	-12.1
04-04	2/20/2004	H	583805	1882895	-7.9
04-05	2/22/2004	I	583898	1882923	-6.1
04-06	3/10/2004	None	583005	1883110	-6.4

Table 2. Gradations

Sample Designation	U.S. Standard Seive Sizes 9.5	4.75	2.8	2	1.4	1	0.71	0.5	0.36	0.3	0.2	0.13	0.1	0.1	0.1	Atterberg Limits LL	PI		Classification
2002 Gradations																			
02-01	100	100	100	100	100	99	98	97	94	85	60	23	5	3	2	n/p		SP	Poorly Graded Sand
02-02	100	100	100	100	99	98	96	93	89	79	55	19	4	3	2	n/p		SP	Poorly Graded Sand
02-03	100	100	100	99	96	90	77	63	50	30	12	3	1	1	1	n/p		SP	Poorly Graded Sand
02-04	100	100	100	99	98	96	90	82	72	48	20	6	2	1	1	n/p		SP	Poorly Graded Sand
02-05	100	100	100	100	99	98	96	93	89	79	52	19	5	3	3	n/p		SP	Poorly Graded Sand
02-06	100	100	100	99	98	96	91	82	71	53	28	9	2	2	1	n/p		SP	Poorly Graded Sand
02-07	100	100	100	99	99	98	94	87	76	56	27	9	3	2	2	n/p		SP	Poorly Graded Sand
02-08	100	98	98	97	96	95	92	85	75	56	27	9	4	3	3	n/p		SP	Poorly Graded Sand
02-09	100	100	100	99	99	97	94	87	77	56	27	10	4	3	3	n/p		SP	Poorly Graded Sand
02-10	100	98	98	97	96	95	92	84	75	59	31	11	3	2	2	n/p		SP	Poorly Graded Sand
02-11	100	98	96	92	84	75	66	57	48	28	7	1	1	1	1	n/p		SP	Poorly Graded Sand
02-12	100	98	95	92	85	76	64	51	38	22	8	2	1	1	1	n/p		SP	Poorly Graded Sand
02-13	100	99	99	96	91	83	72	58	45	27	10	3	1	1	1	n/p		SP	Poorly Graded Sand
02-14	100	99	99	97	93	86	76	63	50	29	10	2	1	1	1	n/p		SP	Poorly Graded Sand
02-15	100	100	100	100	99	97	95	90	83	54	18	4	2	1	1	n/p		SP	Poorly Graded Sand

Sample Designation	U.S. Standard Seive Sizes 9.5	4.75	2.8	2	1.4	1	0.71	0.5	0.36	0.3	0.2	0.13	0.1	0.1	0.1	Atterberg Limits LL	PI		Classification
2004 Gradations																			
04-01	100	98	95	92	85	76	64	49	37	26	15	7	7	3	3	n/p		SP	Poorly Graded Sand
04-02	99	97	96	94	92	89	83	77	71	62	48	30	14	10	9	n/p		SP-SM	Poorly Graded Sand with Silt
04-03	100	100	100	100	100	100	100	98	93	77	47	22	9	6	5	n/p		SP-SM	Poorly Graded Sand with Silt
04-04	100	100	100	100	99	97	94	85	69	39	16	5	5	2	2	n/p		SP	Poorly Graded Sand
04-05	100	100	100	100	99	97	93	85	70	40	16	5	3	3	3	n/p		SP	Poorly Graded Sand
04-06	100	100	100	100	100	100	100	99	95	80	52	23	23	6	5	n/p		SP-SM	Poorly Graded Sand with Silt