US Army Corps
of Engineers
Sacramento District

F/A-22 ADD/ALTER WEAPONS SCHOOL BUILDING 282

NELLIS AIR FORCE BASE
NEVADA

PN RKMF 06-3009

FY-06

THIS PROJECT WAS DESIGNED BY THE SACRAMENTO DISTRICT OF THE U. S. ARMY CORPS OF ENGINEERS. THE INITIALS OR SIGNATURES AND REGISTRATION DESIGNATIONS OF INDIVIDUALS APPEAR ON THESE PROJECT DOCUMENTS WITHIN THE SCOPE OF THEIR EMPLOYMENT AS REQUIRED BY ER 1110-1-8152.

Approved
Chief, Engineering Division _____ Date: _____
Prepared Under the Direction of
Col, Corps of Engineers _____ District Engineer

Drawing Code: C-171-211
Designed by: J NEUMYER
Drawn by: JFN
Spec No. 1304
Design File No: 229-25-539

Approved Functional Adequacy
Chief, Design Branch _____ Date: _____
Prepared by
SACRAMENTO DISTRICT
DESIGN BRANCH
Chief, Architectural Design Section _____ Date: _____

NELLIS AFB
NEVADA
F/A-22 ADD/ALTER WEAPONS SCHOOL
TITLE SHEET

Sheet reference number:
G-101

Border Rev. 06/28/04, CCESINTEGRNG TRISERVICE REV

SCHEDULE OF DRAWINGS

SEQ. NO.	SHT. NO.	DRAWING TITLE
		GENERAL
1	G-101	TITLE SHEET
2	G-201	SCHEDULE OF DRAWINGS
3	G-202	SCHEDULE OF DRAWINGS
4	G-203	SCHEDULE OF DRAWINGS
5	G-301	VICINITY & PROJECT LOCATION MAPS
6	G-302	ENLARGED LOCATION MAP
		TOPOGRAPHY
7	V-101	INDEX
8	V-102	TOPOGRAPHY
9	V-103	TOPOGRAPHY
10	V-104	TOPOGRAPHY
11	V-105	TOPOGRAPHY
12	V-106	TOPOGRAPHY
13	V-107	TOPOGRAPHY
		GEOTECHNICAL
14	B-101	LEGEND AND NOTES
15	B-102	LOG OF EXPLORATIONS
		CIVIL
16	C-001	ABBREVIATIONS, LEGENDS AND NOTES
17	C-131	DEMOLITION PLAN
18	C-132	DEMOLITION PLAN
19	C-133	DEMOLITION PLAN BID OPTION
20	C-141	SITE PLAN
21	C-142	SITE PLAN
22	C-143	SITE PLAN BID OPTION
23	C-151	PAVING AND GRADING PLAN
24	C-152	PAVING AND GRADING PLAN
25	C-153	PAVING AND GRADING PLAN BID OPTION
26	C-161	UTILITY PLAN
27	C-162	UTILITY PLAN EXISTING WATER, 4 IN. SEWER LINE
28	C-163	UTILITY PLAN EXISTING WATER
29	C-501	SITE DETAILS
30	C-502	UTILITY DETAILS
31	C-503	DEMOLITION DETAILS
32	C-504	MISCELLANEOUS DETAILS
		LANDSCAPE ARCHITECTURE
33	L-101	LANDSCAPE LAYOUT PLAN
34	L-401	LANDSCAPE IRRIGATION DETAILS
35	L-402	LANDSCAPE ARCHITECTURAL DETAILS
		STRUCTURAL
36	S-001	GENERAL STRUCTURAL NOTES AND DESIGN NOTES
37	S-002	GENERAL STRUCTURAL NOTES AND ABBREVIATIONS

SEQ. NO.	SHT. NO.	DRAWING TITLE
38	S-101	GRID LINE LAYOUT FOR WALLS AND COLUMNS AT
		FLOOR PLAN AREA A ~ BUILDING 282 ADDITION
39	S-101A	GRID LINE LAYOUT FOR WALLS AND COLUMNS AT
		FLOOR PLAN AREA A ~ BUILDING 282 ADDITION
		(BID OPTION 1)
40	S-102	SECOND FLOOR FRAMING PLAN AREA A, BUILDING 282
		ADDITION FOR COLUMNS SPANNING BETWEEN SECOND
		FLOOR AND ROOF
41	S-102A	SECOND FLOOR FRAMING PLAN AREA A, BUILDING 282
		ADDITION FOR COLUMNS SPANNING BETWEEN SECOND
		FLOOR AND ROOF (BID OPTION 1)
42	S-103	FOUNDATION PLAN AREA A BUILDING 282 ADDITION
43	S-103A	FOUNDATION PLAN AREA A BUILDING 282 ADDITION
		(BID OPTION 1)
44	S-104	FOUNDATION PLAN AREA B BUILDING 282 ADDITION
45	S-104A	FOUNDATION PLAN AREA B BUILDING 282 ADDITION
		(BID OPTION 1)
46	S-105	FIRST FLOOR PLAN AREA A BUILDING 282 ADDITION
47	S-105A	FIRST FLOOR PLAN AREA A BUILDING 282 ADDITION
		(BID OPTION 1)
48	S-106	FIRST FLOOR PLAN AREA B BUILDING 282 ADDITION
49	S-106A	FIRST FLOOR PLAN AREA B BUILDING 282 ADDITION
		(BID OPTION 1)
50	S-107	2nd FLOOR FRAMING PLAN AREA A BLDG 282 ADD'N
51	S-107A	2nd FLOOR FRAMING PLAN AREA A BLDG 282
		ADDITION (BID OPTION 1)
52	S-108	2nd FLOOR FRAMING PLAN AREA B BLDG 282 ADD'N
53	S-108A	2nd FLOOR FRAMING PLAN AREA B BLDG 282
		ADDITION (BID OPTION 1)
54	S-109	ROOF FRAMING PLAN AREA A BUILDING 282 ADDITION
55	S-109A	ROOF FRAMING PLAN AREA A BUILDING 282 ADDITION
		(BID OPTION 1)
56	S-110	ROOF FRAMING PLAN AREA B BUILDING 282 ADDITION
57	S-110A	ROOF FRAMING PLAN AREA B BUILDING 282 ADDITION
		(BID OPTION 1)
58	S-301	ELEVATION – ALONG GRID LINE 'L'
59	S-302	ELEVATION – ALONG GRID LINE 'L'
60	S-303	ELEVATION – ALONG GRID LINE 'L'
61	S-304	ELEVATION – ALONG GRID LINE 'L'
62	S-305	ELEVATION – ALONG GRID LINE 'L'
63	S-306	ELEVATION – ALONG GRID LINE 'I'
64	S-307	ELEVATION – ALONG GRID LINE 'I'
65	S-308	ELEVATION – ALONG GRID LINE 'I'
66	S-309	ELEVATION – ALONG GRID LINE 'I'
67	S-310	ELEVATION – ALONG GRID LINE 'I'
68	S-311	ELEVATION – ALONG GRID LINE 'E'
69	S-312	ELEVATION – ALONG GRID LINE 'E'
70	S-313	ELEVATION – ALONG GRID LINE 'E'

SEQ. NO.	SHT. NO.	DRAWING TITLE
71	S-314	ELEVATION – ALONG GRID LINE 'E'
72	S-315	ELEVATION – ALONG GRID LINE 'E'
73	S-501	TYPICAL CONCRETE DETAILS
74	S-502	TYPICAL FOOTING DETAILS
75	S-503	TYPICAL FOOTING AND COLUMN BASE DETAILS
76	S-504	TYPICAL 8" CONRETE MASONRY UNITS (CMU) DETAILS
77	S-505	TYPICAL 12" CONCRETE MANSONRY UNITS (CMU) DETAILS
78	S-506	TYPICAL STEEL COLUMN AND CMU WALL
		CONNECTION DETAILS
79	S-507	TYPICAL COLD-FORMED DETAILS AND MISCELLANEOUS
		FRAMING DETAILS
80	S-508	TYPICAL STEEL DECK DETAILS
81	S-509	TYPICAL TOWER ROOF FRAMING DETAILS
82	S-510	ELEVATOR PIT DETAILS
		ARCHITECTURAL
83	A-001	EXTERIOR COLOR SCHEDULE, ABBREVIATIONS AND LEGEND
84	A-101	OVERALL REFERENCE FLOOR PLAN &
		CONSTRUCTION PHASING PLAN
85	A-101A	OVERALL REFERENCE FLOOR PLAN &
		CONSTRUCTION PHASING PLAN (BID OPTION 1)
86	A-102	BUILDING 282 DEMOLITION FLOOR PLAN AREA A
87	A-103	BUILDING 282 DEMOLITION FLOOR PLAN AREA B
88	A-104	BUILDING 282 DEMOLITION FLOOR PLAN AREA C
89	A-105	COVERED PATIO/WALKWAY DEMOLITION PLAN
90	A-105A	COVERED PATIO/WALKWAY DEMOLITION PLAN
		(BID OPTION 1)
	A-106	NOT USED
91	A-107	BUILDING 282 FLOOR PLAN AREA A
92	A-108	BUILDING 282 FLOOR PLAN AREA B
93	A-109	BUILDING 282 FLOOR PLAN AREA C
	A-110	NOT USED
94	A-111	BUILDING 282 ADDITION REFERENCE FLOOR PLANS
95	A-111A	BUILDING 282 ADDITION REFERENCE FLOOR PLANS
		(BID OPTION 1)
96	A-112	BUILDING 282 ADDITION FIRST FLOOR PLAN AREA A
97	A-113	BUILDING 282 ADDITION FIRST FLOOR PLAN AREA B
98	A-113A	BUILDING 282 ADDITION FIRST FLOOR PLAN AREA B
		(BID OPTION 1)
99	A-114	BUILDING 282 ADDITION SECOND FLOOR PLAN AREA A
100	A-115	BUILDING 282 ADDITION SECOND FLOOR PLAN AREA B
101	A-115A	BUILDING 282 ADDITION SECOND FLOOR PLAN AREA B
		(BID OPTION 1)
102	A-116	BUILDING 282 ADDITION ROOF PLAN
103	A-116A	BUILDING 282 ADDITION ROOF PLAN
104	A-117	BUILDING 282 REFLECTED CEILING PLAN AREA A
105	A-118	BUILDING 282 REFLECTED CEILING PLAN AREA B

SEQ. NO.	SHT. NO.	DRAWING TITLE
106	A-119	BUILDING 282 REFLECTED CEILING PLAN AREA C
	A-120	NOT USED
107	A-121	BUILDING 282 ADDITION FIRST FLOOR AREA A
		REFLECTED CEILING PLAN
108	A-122	BUILDING 282 ADDITION FIRST FLOOR AREA B
		REFLECTED CEILING PLAN
109	A-122A	BUILDING 282 ADDITION FIRST FLOOR AREA B
		REFLECTED CEILING PLAN (BID OPTION 1)
110	A-123	BUILDING 282 ADDITION SECOND FLOOR AREA A
		REFLECTED CEILING PLAN
111	A-123A	BUILDING 282 ADDITION SECOND FLOOR AREA A
		REFLECTED CEILING PLAN (BID OPTION 1)
112	A-124	BUILDING 282 ADDITION SECOND FLOOR AREA B
		REFLECTED CEILING PLAN
113	A-124A	BUILDING 282 ADDITION SECOND FLOOR AREA B
		REFLECTED CEILING PLAN (BID OPTION 1)
114	A-130	BUILDING 282 OVERALL SCIF AREA PLAN
115	A-131	BUILDING 282 ADDITION OVERALL SCIF AREA PLANS
116	A-131A	BUILDING 282 ADDITION OVERALL SCIF AREA PLANS
		(BID OPTION 1)
117	A-201	BUILDING 282 NORTH ELEVATION
118	A-202	BUILDING 282 SOUTH ELEVATION
119	A-202A	BUILDING 282 SOUTH ELEVATION (BID OPTION 1)
120	A-203	BUILDING 282 WEST ELEVATIONS
121	A-203A	BUILDING 282 WEST ELEVATIONS (BID OPTION 1)
122	A-204	BUILDING 282 EAST ELEVATION
123	A-205	BUILDING 282 MISCELLANEOUS ELEVATIONS
124	A-206	BUILDING 282 ADDITION NORTH AND WEST ELEVATION
		DIMENSIONS
125	A-206A	BUILDING 282 ADDITION NORTH AND WEST ELEVATION
		DIMENSIONS (BID OPTION 1)
126	A-207	BUILDING 282 ADDITION EAST AND SOUTH ELEVATION
		DIMENSIONS
127	A-207A	BUILDING 282 ADDITION EAST AND SOUTH ELEVATION
		DIMENSIONS (BID OPTION 1)
128	A-301	BUILDING 282 ADDITION BUILDING SECTIONS
129	A-301A	BUILDING 282 ADDITION BUILDING SECTIONS
		(BID OPTION 1)
130	A-302	BUILDING 282 ADDITION BUILDING SECTIONS
131	A-302A	BUILDING 282 ADDITION BUILDING SECTIONS
		(BID OPTION 1)
132	A-303	BUILDING 282 ADDITION BUILDING SECTION
133	A-304	BUILDING 282 ADDITION WALL SECTIONS
134	A-305	BUILDING 282 ADDITION WALL SECTIONS
135	A-306	BUILDING 282 ADDITION STAIR SECTIONS
136	A-307	BUILDING 282 ADDITION STAIR SECTIONS
137	A-308	BUILDING 282 ADDITION STAIR SECTIONS
138	A-309	BUILDING 282 ADDITION STAIR SECTION

US Army Corps of Engineers
Sacramento District

Symbol	Description	Date	Approved

Designed by: J.NEUMYER
Dwn by: JFN
Spec No.: 1304
Reviewed by: D.TURNER
Submitted by: Chief, Architectural Des. Sec.
Date: dd/mm/yy
Rev.
Design file no: 229-25-539
Drawing Code:
File name: N39C-201X0C.dwg
Plot date: 07/15/04
Dwg scale: AS_NOTED

DEPARTMENT OF THE ARMY
CORPS OF ENGINEERS
SACRAMENTO, CALIFORNIA

SACRAMENTO DISTRICT
IN-HOUSE DESIGN
1325 J STREET
SACRAMENTO, CA 95814-2922

NEVADA

NELLIS AFB

F/A-22 ADD/ALTER WEAPONS SCHOOL

SCHEDULE OF DRAWINGS

Sheet reference number:
G-201

Border Revised 03/10/04, CCES01D2.DWG

SCHEDULE OF DRAWINGS

SEQ. NO.	SHT. NO.	DRAWING TITLE
139	A-401	ENLARGED FLOOR PLANS
140	A-402	TOILET ROOM ELEVATIONS
141	A-403	ENLARGED FLOOR PLANS AND ELEVATIONS
142	A-404	ENLARGED STAIR PLANS
143	A-405	ENLARGED FLOOR PLANS AND ELEVATIONS
144	A-406	CABINETRY DETAILS
145	A-407	STAIR DETAILS
146	A-408A	ENLARGED FLOOR PLAN (BID OPTION 1)
147	A-501	WALL TYPES
148	A-502	SIGNAGE SCHEDULES
149	A-503	SIGNAGE DETAILS
150	A-504	ROOF DETAILS
151	A-505	ROOF AND SOFFIT DETAILS
152	A-506	REFLECTED CEILING DETAILS
153	A-507	DOOR DETAILS
154	A-508	DOOR DETAILS
155	A-509	MISCELLANEOUS DETAILS
156	A-510	MISCELLANEOUS DETAILS
157	A-511	MISCELLANEOUS DETAILS
158	A-512	TRANSLUCENT WALL SYSTEM DETAILS
159	A-513	SEALANT DETAILS
160	A-601	INTERIOR COLOR/FINISH SCHEDULE
		BLDG 282 FIRST FLOOR RENOVATION
161	A-602	INTERIOR COLOR/FINISH SCHEDULE
		BLDG 282 FIRST FLOOR RENOVATION
162	A-603	INTERIOR COLOR/FINISH SCHEDULE
		BLDG 282 FIRST FLOOR RENOVATION
163	A-604	INTERIOR COLOR/FINISH SCHEDULE
		BLDG 282 FIRST FLOOR RENOVATION
164	A-605	INTERIOR COLOR/FINISH SCHEDULE
		BLDG 282 FIRST FLOOR ADDITION
165	A-606	INTERIOR COLOR/FINISH SCHEDULE
		BLDG 282 SECOND FLOOR ADDITION
	A-607	NOT USED
166	A-608	DOOR SCHEDULE
167	A-609	DOOR SCHEDULE
168	A-610	DOOR SCHEDULE, WINDOW SCHEDULE AND
		WINDOW DETAILS
169	A-611	SIGNAGE SCHEDULE
170	A-612	SIGNAGE SCHEDULE
171	A-613	ROOM 1202, LOBBY FLOOR PATTERN BUILDING 282
		ADDITION
		FIRE PROTECTION
172	F-101	FIRE PROTECTION FLOOR PLAN BUILDING 282 AREA A
173	F-102	FIRE PROTECTION FLOOR PLAN BUILDING 282 AREA B
174	F-103	FIRE PROTECTION FLOOR PLAN BUILDING 282 AREA C

SEQ. NO.	SHT. NO.	DRAWING TITLE
175	F-104	FIRE PROTECTION FLOOR PLAN BUILDING 282 ADDITION
		FIRST FLOOR PLAN AREA A
176	F-105	FIRE PROTECTION FLOOR PLAN BUILDING 282 ADDITION
		FIRST FLOOR PLAN AREA B
177	F-105A	FIRE PROTECTION FLOOR PLAN BUILDING 282 ADDITION
		FIRST FLOOR PLAN AREA B (BID OPTION 1)
178	F-106	FIRE PROTECTION FLOOR PLAN BUILDING 282 ADDITION
		SECOND FLOOR PLAN AREA A
179	F-107	FIRE PROTECTION FLOOR PLAN BUILDING 282 ADDITION
		SECOND FLOOR PLAN AREA B
180	F-107A	FIRE PROTECTION FLOOR PLAN BUILDING 282 ADDITION
		SECOND FLOOR PLAN AREA B (BID OPTION 1)
181	F-501	FIRE PROTECTION DETAILS
		PLUMBING
182	P-101	PLUMBING FLOOR PLAN BUILDING 282 AREA A
183	P-102	PLUMBING FLOOR PLAN BUILDING 282 AREA B
184	P-103	PLUMBING FLOOR PLAN BUILDING 282 AREA C
185	P-104	PLUMBING FLOOR PLAN BUILDING 282 ADDITION
		FIRST FLOOR AREA A
186	P-105	PLUMBING FLOOR PLAN BUILDING 282 ADDITION
		FIRST FLOOR AREA B
187	P-105A	PLUMBING FLOOR PLAN BUILDING 282 ADDITION
		FIRST FLOOR AREA B (BID OPTION 1)
188	P-106	PLUMBING FLOOR PLAN BUILDING 282 ADDITION
		SECOND FLOOR AREA A
189	P-107	PLUMBING FLOOR PLAN BUILDING 282 ADDITION
		SECOND FLOOR AREA B
190	P-107A	PLUMBING FLOOR PLAN BUILDING 282 ADDITION
		SECOND FLOOR AREA B (BID OPTION 1)
191	P-401	ENLARGED PLUMBING FLOOR PLAN BUILDING 282
192	P-402	ENLARGED PLUMBING FLOOR PLAN BUILDING 282
193	P-501	PLUMBING DETAILS
194	P-601	PLUMBING LEGEND AND ABBREVIATIONS
195	P-602	SCHEDULES
		MECHANICAL
196	M-101	MECHANICAL FLOOR PLAN BUILDING 282 AREA A
197	M-102	MECHANICAL FLOOR PLAN BUILDING 282 AREA B
198	M-103	MECHANICAL FLOOR PLAN BUILDING 282 AREA C
199	M-104	MECHANICAL FLOOR PLAN BUILDING 282 ADDITION
		FIRST FLOOR PLAN AREA A
200	M-105	MECHANICAL FLOOR PLAN BUILDING 282 ADDITION
		FIRST FLOOR PLAN AREA B
201	M-105A	MECHANICAL FLOOR PLAN BUILDING 282 ADDITION
		FIRST FLOOR PLAN AREA B (BID OPTION 1)

SEQ. NO.	SHT. NO.	DRAWING TITLE
202	M-106	MECHANICAL FLOOR PLAN BUILDING 282 ADDITION
		SECOND FLOOR PLAN AREA A
203	M-107	MECHANICAL FLOOR PLAN BUILDING 282 ADDITION
		SECOND FLOOR PLAN AREA B
204	M-107A	MECHANICAL FLOOR PLAN BUILDING 282 ADDITION
		SECOND FLOOR PLAN AREA B (BID OPTION 1)
205	M-201	MECHANICAL PIPING FLOOR PLAN BUILDING 282
		FLOOR PLAN AREA A
206	M-202	MECHANICAL PIPING FLOOR PLAN BUILDING 282
		FLOOR PLAN AREA B
207	M-203	MECHANICAL PIPING FLOOR PLAN BUILDING 282
		FLOOR PLAN AREA C
208	M-204	MECHANICAL PIPING FLOOR PLAN BUILDING 282
		ADDITION FIRST FLOOR PLAN AREA A
209	M-205	MECHANICAL PIPING FLOOR PLAN BUILDING 282
		ADDITION FIRST FLOOR PLAN AREA B
210	M-205A	MECHANICAL PIPING FLOOR PLAN BUILDING 282
		ADDITION FIRST FLOOR PLAN AREA B (BID OPTION 1)
211	M-206	MECHANICAL PIPING FLOOR PLAN BUILDING 282
		ADDITION SECOND FLOOR PLAN AREA B
212	M-206A	MECHANICAL PIPING FLOOR PLAN BUILDING 282
		ADDITION SECOND FLOOR PLAN AREA B (BID OPTION 1)
213	M-207	MECHANICAL PIPING FLOOR PLAN BUILDING 282
		ADDITION SECOND FLOOR PLAN AREA A
214	M-401	ENLARGED MECHANICAL FLOOR PLAN BUILDING 282
215	M-402	ENLARGED MECHANICAL FLOOR PLAN BLDG 282 ADD'N
216	M-403	ENLARGED MECHANICAL FLOOR PLAN BLDG 282
217	M-501	MECHANICAL DETAILS
218	M-502	MECHANICAL DETAILS
219	M-503	MECHANICAL DETAILS
220	M-504	MECHANICAL DETAILS
221	M-505	MECHANICAL DETAILS
222	M-601	MECHANICAL LEGEND AND ABBREVIATIONS
223	M-602	MECHANICAL SCHEDULES
224	M-603	MECHANICAL SCHEDULES
225	M-604	MECHANICAL SCHEDULES
226	M-605	MECHANICAL SCHEDULES
227	M-606	MECHANICAL SCHEDULES
228	M-607	MECHANICAL SCHEDULES
229	M-608	MECHANICAL SCHEDULES
230	M-609	MECHANICAL SCHEDULES
231	M-701	DEMOLITION MECHANICAL FLOOR PLAN BUILDING 282
		FLOOR PLAN AREA A
232	M-702	DEMOLITION MECHANICAL FLOOR PLAN BUILDING 282
		FLOOR PLAN AREA B
233	M-703	DEMOLITION MECHANICAL FLOOR PLAN BUILDING 282
		FLOOR PLAN AREA C

SEQ. NO.	SHT. NO.	DRAWING TITLE
234	M-703A	DEMOLITION MECHANICAL FLOOR PLAN BUILDING 282
		FLOOR PLAN AREA C (BID OPTION 1)
235	M-801	EXISTING JOHNSON CONTROLS IN BUILDING 282
236	M-802	EXISTING JOHNSON CONTROLS IN BUILDING 282
237	M-803	EXISTING JOHNSON CONTROLS IN BUILDING 282
238	M-804	EXISTING JOHNSON CONTROLS IN BUILDING 282
239	M-805	EXISTING JOHNSON CONTROLS IN BUILDING 282
240	M-806	EXISTING JOHNSON CONTROLS IN BUILDING 282
241	M-807	EXISTING JOHNSON CONTROLS IN BUILDING 282
242	M-808	EXISTING JOHNSON CONTROLS IN BUILDING 282
243	M-809	EXISTING JOHNSON CONTROLS IN BUILDING 282
244	M-810	EXISTING JOHNSON CONTROLS IN BUILDING 282
245	M-811	EXISTING JOHNSON CONTROLS IN BUILDING 282
246	M-812	EXISTING JOHNSON CONTROLS IN BUILDING 282
247	M-813	EXISTING JOHNSON CONTROLS IN BUILDING 282
248	M-814	EXISTING JOHNSON CONTROLS IN BUILDING 282
249	M-815	EXISTING JOHNSON CONTROLS IN BUILDING 282
250	M-816	EXISTING JOHNSON CONTROLS IN BUILDING 282
251	M-817	AHU-1,2,3 & 5 VAV SYSTEM CONTROLS
252	M-818	AHU-4 SYSTEM CONTROLS
253	M-819	VAV REHEAT BOX SYSTEM CONTROLS
254	M-820	VAV COOLING ONLY BOY SYSTEM CONTROLS
255	M-821	HOT WATER SYSTEM CONTROLS
256	M-822	CHILLED WATER SYSTEM CONTROLS
257	M-823	EXHAUST FAN & COMPUTER ROOM UNIT SYSTEM
		CONTROLS
258	M-824	FAN COIL SYSTEM CONTROLS
259	M-825	NET WORK SYSTEM
		ELECTRICAL
260	E-001	ELECTRICAL LEGEND
261	E-101	LIGHTING FLOOR PLAN BUILDING 282 AREA A
262	E-102	LIGHTING FLOOR PLAN BUILDING 282 AREA B
263	E-103	LIGHTING FLOOR PLAN BUILDING 282 AREA C
264	E-104	LIGHTING FLOOR PLAN BUILDING 282 ADDITION
		FIRST FLOOR AREA A
265	E-105	LIGHTING FLOOR PLAN BUILDING 282 ADDITION
		FIRST FLOOR AREA B
266	E-105A	LIGHTING FLOOR PLAN BUILDING 282 ADDITION
		FIRST FLOOR AREA B (BID OPTION 1)
267	E-106	LIGHTING FLOOR PLAN BUILDING 282 ADDITION
		SECOND FLOOR AREA A
268	E-107	LIGHTING FLOOR PLAN BUILDING 282 ADDITION
		SECOND FLOOR AREA B
269	E-107A	LIGHTING FLOOR PLAN BUILDING 282 ADDITION
		SECOND FLOOR AREA B (BID OPTION 1)

US Army Corps of Engineers
Sacramento District

Symbol	Description	Date	Approved

Designed by: J.NEUMYER
Dwn by: JFN
Spec No.: 1304
Reviewed by: D.TURNER
Submitted by:
Chief, Architectural Des. Sec.
Date: dd/mm/yy
Rev.
Design file no: 239-25-539
Drawing Code:
File name: N39C-202XXX.dwg
Plot date: 10/25/04
Dwg scale: AS_NOTED

DEPARTMENT OF THE ARMY
CORPS OF ENGINEERS
SACRAMENTO, CALIFORNIA

SACRAMENTO DISTRICT
IN-HOUSE DESIGN
1325 J STREET
SACRAMENTO, CA 95814-2922

NEVADA

NELLIS AFB

F/A-22 ADD/ALTER WEAPONS SCHOOL

SCHEDULE OF DRAWINGS

Sheet reference number:
G-202

Border Revised 03/10/04, CCES01D2.DWG

SCHEDULE OF DRAWINGS

SEQ. NO.	SHT. NO.	DRAWING TITLE	SEQ. NO.	SHT. NO.	DRAWING TITLE	SEQ. NO.	SHT. NO.	DRAWING TITLE	SEQ. NO.	SHT. NO.	DRAWING TITLE
270	E-110	POWER FLOOR PLAN BUILDING 282 FLOOR PLAN	304	E-704	DEMOLITION POWER FLOOR PLAN BUILDING 282						
		AREA A			AREA A						
271	E-111	POWER FLOOR PLAN BUILDING 282 FLOOR PLAN	305	E-705	DEMOLITION POWER FLOOR PLAN BUILDING 282						
		AREA B			AREA B						
272	E-112	POWER FLOOR PLAN BUILDING 282 FLOOR PLAN	306	E-706	DEMOLITION POWER FLOOR PLAN BUILDING 282						
		AREA C			AREA C						
273	E-113	POWER FLOOR PLAN BUILDING 282 ADDITION	307	E-707	DEMOLITION COMMUNICATION FLOOR PLAN						
		FIRST FLOOR AREA A			BUILDING 282 AREA A						
274	E-114	POWER FLOOR PLAN BUILDING 282 ADDITION	308	E-708	DEMOLITION COMMUNICATION FLOOR PLAN						
		FIRST FLOOR AREA B			BUILDING 282 AREA B						
275	E-114A	POWER FLOOR PLAN BUILDING 282 ADDITION	309	E-709	DEMOLITION COMMUNICATION FLOOR PLAN						
		FIRST FLOOR AREA B (BID OPTION 1)			BUILDING 282 AREA C						
276	E-115	POWER FLOOR PLAN BUILDING 282 ADDITION									
		SECOND FLOOR AREA A									
277	E-116	POWER FLOOR PLAN BUILDING 282 ADDITION			TELECOMMUNICATIONS						
		SECOND FLOOR AREA B	310	T-120	COMMUNICATION FLOOR PLAN BUILDING 282 AREA A						
278	E-116A	POWER FLOOR PLAN BUILDING 282 ADDITION	311	T-121	COMMUNICATION FLOOR PLAN BUILDING 282 AREA B						
		SECOND FLOOR AREA B (BID OPTION 1)	312	T-122	COMMUNICATION FLOOR PLAN BUILDING 282 AREA C						
279	E-120	ELECTRICAL SITE PLAN DEMOLITION	313	T-123	COMMUNICATION FLOOR PLAN BUILDING 282 ADDITION						
280	E-120A	ELECTRICAL SITE PLAN DEMOLITION (BID OPTION 1)			FIRST FLOOR AREA A						
281	E-121	ELECTRICAL SITE PLAN	314	T-124	COMMUNICATION FLOOR PLAN BUILDING 282 ADDITION						
282	E-121A	ELECTRICAL SITE PLAN (BID OPTION 1)			FIRST FLOOR AREA B						
283	E-501	COMMUNICATION DETAILS	315	T-124A	COMMUNICATION FLOOR PLAN BUILDING 282 ADDITION						
284	E-502	LIGHTING FIXTURE SCHEDULE AND LIGHT			FIRST FLOOR AREA B (BID OPTION 1)						
		FIXTURE DETAILS	316	T-125	COMMUNICATION FLOOR PLAN BUILDING 282 ADDITION						
285	E-503	FIRE ALARM SYSTEM DIAGRAM AND DETAILS			SECOND FLOOR AREA A						
286	E-504	COMMUNICATION SYSTEM DIAGRAMS AND DETAILS	317	T-126	COMMUNICATION FLOOR PLAN BUILDING 282 ADDITION						
287	E-505	MANHOLE DETAILS			SECOND FLOOR AREA B						
288	E-506	TRANSFORMER DETAILS	318	T-126A	COMMUNICATION FLOOR PLAN BUILDING 282 ADDITION						
289	E-507	GROUNDING AND LIGHTNING DETAILS			SECOND FLOOR AREA B (BID OPTION 1)						
290	E-508	GROUNDING AND COMMUNICATION DETAILS	319	T-127	COMMUNICATION SITE PLAN DEMOLITION						
291	E-509	FIRE ALARM SYSTEM DIAGRAM GROUNDING,	320	T-128	COMMUNICATION SITE PLAN						
		AND DETAILS	321	T-128A	COMMUNICATION SITE PLAN (BID OPTION 1)						
292	E-510	COMMUNICATIONS SYSTEM DIAGRAMS AND DETAILS II	322	T-129	COMMUNICATION ROOM ENLARGED PLANS BUILDING 282						
293	E-511	COMMUNICATIONS SYSTEM DIAGRAMS AND DETAILS III			ADDITION						
294	E-601	POWER ONE-LINE DIAGRAM									
295	E-602	POWER ONE-LINE DIAGRAM II									
296	E-603	POWER ONE-LINE DIAGRAM III									
297	E-604	PANEL SCHEDULES									
298	E-605	PANEL SCHEDULES									
299	E-606	PANEL SCHEDULES									
300	E-607	PANEL SCHEDULES									
301	E-701	DEMOLITION LIGHTING FLOOR PLAN BUILDING 282									
		AREA A									
302	E-702	DEMOLITION LIGHTING FLOOR PLAN BUILDING 282									
		AREA B									
303	E-703	DEMOLITION LIGHTING FLOOR PLAN BUILDING 282									
		AREA C									

US Army Corps of Engineers
Sacramento District

Symbol	Description	Date	Approved

Designed by: J.NEUMYER
Dwn by: JFN
Spec No.: 1304
Date: dd/mm/yy
Design file no: 229-25-539
Drawing Code:
Rev.
Reviewed by: D.TURNER
Submitted by: ____
Chief, Architectural Res. Sec.
File name: N39C-203000.dwg
Plot date: 10/03/05
Dwg scale: AS_NOTED

DEPARTMENT OF THE ARMY
CORPS OF ENGINEERS
SACRAMENTO, CALIFORNIA

SACRAMENTO DISTRICT
IN-HOUSE DESIGN
1325 J STREET
SACRAMENTO, CA 95814-2922

NEVADA

NELLIS AFB

F/A-22 ADD/ALTER WEAPONS SCHOOL

SCHEDULE OF DRAWINGS

Sheet reference number:
G-203

Border Revised 03/10/04, CCESI1702.DWG

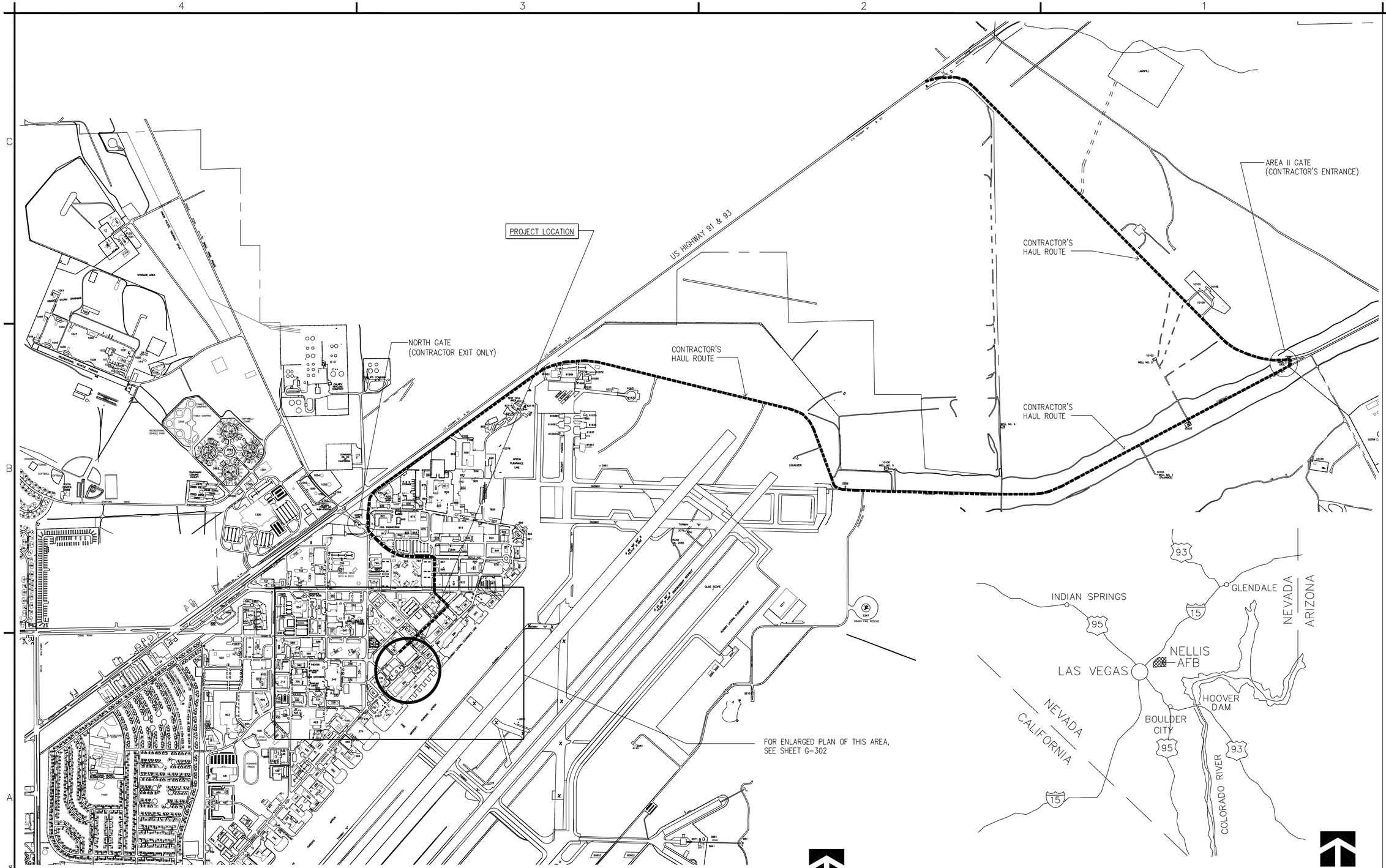

PARTIAL NELLIS AIR FORCE BASE MAP

NOT TO SCALE

VICINITY MAP

NOT TO SCALE

US Army Corps of Engineers
Sacramento District

Symbol	Description	Date	Approved

Rev.

Date: dd/mm/yy
Design file no: 239-25-539
Drawing Code:
File name: N3QC-301XXX.dwg
Plot date: 08/02/04
Dwg scale: AS_NOTED

Designed by: J.NEUMYER
Dwn by: JFN
Spec No.: 1304
Reviewed by: D.TURNER
Submitted by:
Const. Architectural Des. Sec.

DEPARTMENT OF THE ARMY
CORPS OF ENGINEERS
SACRAMENTO, CALIFORNIA

SACRAMENTO DISTRICT
IN-HOUSE DESIGN
1325 J STREET
SACRAMENTO, CA 95814-2922

NEVADA

NELLIS AFB

F/A-22 ADD/ALTER WEAPONS SCHOOL

VICINITY & PROJECT
LOCATION MAPS

Sheet reference number:
G-301

Border Revised 02/01/04, CDESIGN2.DWG

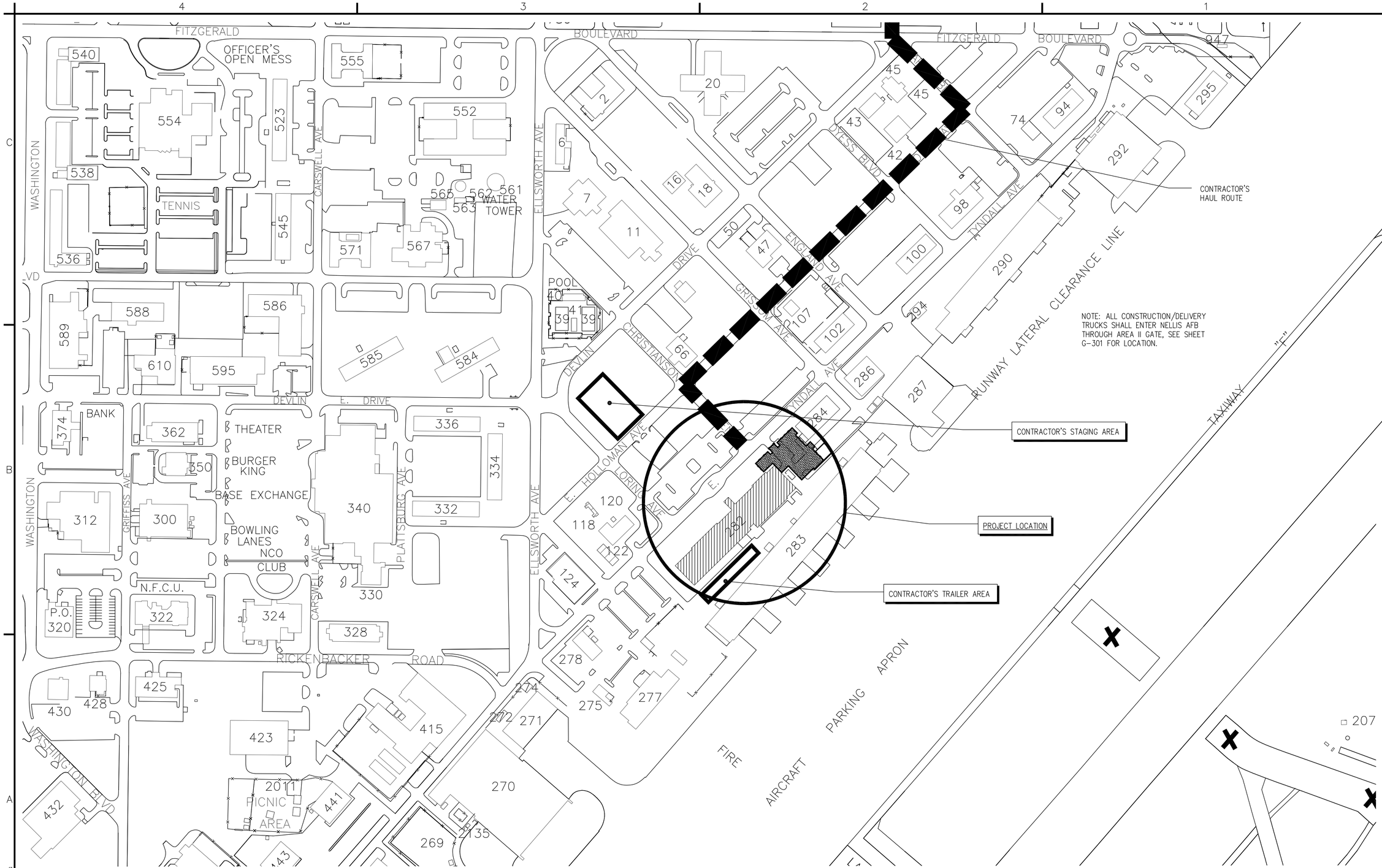

PARTIAL NELLIS AIR FORCE BASE PROJECT LOCATION MAP

NOT TO SCALE

US Army Corps of Engineers
Sacramento District

Symbol	Description	Date	Approved

Rev.

Date: dd/mm/yy
Design file no: 239-25-539
Drawing Code:
Spec No.: 1304
File name: N39c-32200X.dwg
Plot date:
Dwg scale: AS_NOTED

Designed by: J.NEUMAYER
Dwn by: JFN
Reviewed by: D.TURNER
Submitted by:
Chief, Architectural Des. Sec.

DEPARTMENT OF THE ARMY
CORPS OF ENGINEERS
SACRAMENTO, CALIFORNIA

SACRAMENTO DISTRICT
IN-HOUSE DESIGN
1325 J STREET
SACRAMENTO, CA 95814-2922

NEVADA

NELLIS AFB

F/A-22 ADD/ALTER WEAPONS SCHOOL

ENLARGED LOCATION MAP

Sheet reference number:
G-302

Border Revised 03/01/04, DCE3972D.DWG

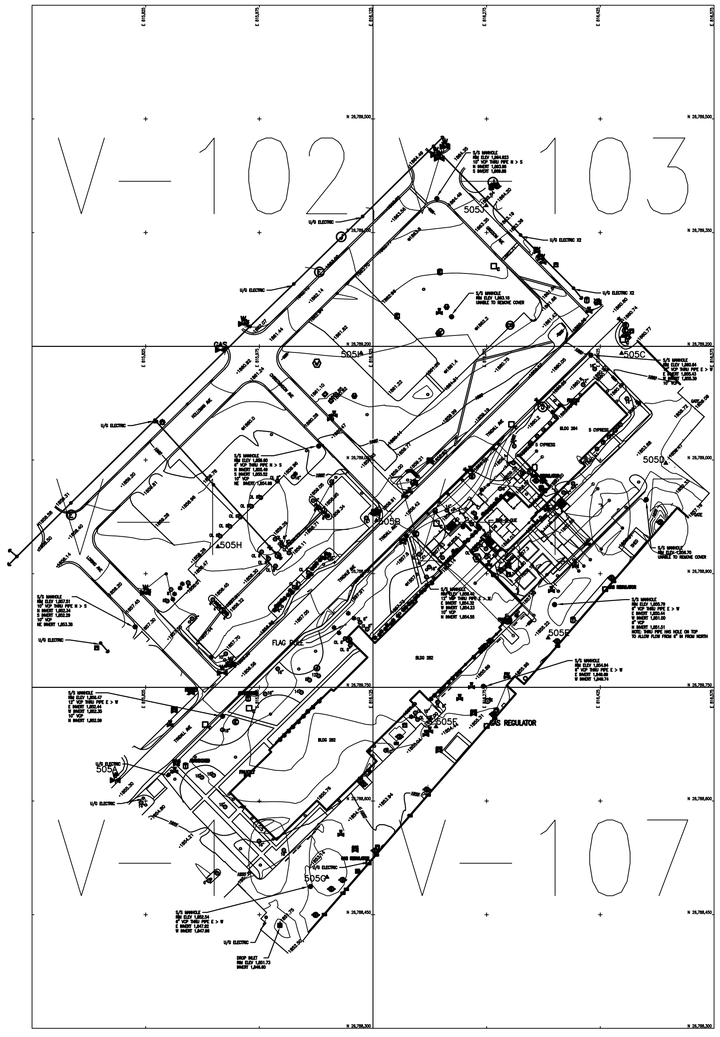

SURVEY NOTES

1. GRID COORDINATES ARE IN FEET AND REFER TO THE NEVADA STATE COORDINATE SYSTEM EAST ZONE, NAD 83, AND ARE BASED ON STATIONS GPS1. GPS4 & GPS5.
2. ELEVATIONS ARE IN FEET AND REFER TO NGVD 1929, AND ARE BASED ON STATION GPS1.
3. TOPOGRAPHY BY GROUND SURVEY METHODS. FIELD SURVEY DATE NOVEMBER 2004.
4. COMBINED SCALE FACTOR IS 0.999839672 FROM GRID TO SCALE.
4. ORIGINAL SURVEY SHOWN ON DRAWING FILE NO. 229-13-539.

CONTROL TABULATION

STATION	NORTH	EAST	MON EL	GR ELEV	DESCRIPTION
GPS1	26,786,749.880	814,152.260	1,850.01	_____	USCE BRASS DISC
GPS4	26,788,289.880	813,836.840	1,865.54	_____	USCE BRASS DISC
GPS5	26,787,766.230	814,164.260	1,858.01	_____	USCE BRASS DISC
505A	26,788,635.222	815,787.071	1,855.86	_____	REBAR w/ALUMINUM CAP
505B	26,788,970.264	816,129.511	1,858.33	_____	REBAR w/ALUMINUM CAP
505C	26,789,190.757	816,453.092	1,860.41	_____	MAG MAIL w/USCOE WASHER
505D	26,789,045.787	816,511.388	1,859.15	_____	MAG MAIL w/USCOE WASHER
505E	26,788,815.312	816,356.095	1,855.81	_____	MAG MAIL w/USCOE WASHER
505F	26,788,698.046	816,208.138	1,855.13	_____	MAG MAIL w/USCOE WASHER
505G	26,788,499.415	816,064.352	1,853.30	_____	MAG MAIL w/USCOE WASHER
505H	26,788,935.487	815,920.232	1,858.73	_____	MAG MAIL w/USCOE WASHER
505I	26,789,190.932	816,109.300	1,861.47	_____	MAG MAIL w/USCOE WASHER
505J	26,789,385.673	816,274.444	1,863.95	_____	MAG MAIL w/USCOE WASHER

SYMBOL LEGEND

- FIRE HYDRANT
- DROP INLET
- SANITARY SEWER MANHOLE
- SEWER CLEAN OUT
- COMMUNICATIONS MANHOLE
- TELEPHONE VAULT
- TELEPHONE
- ELECTRIC PANEL
- ELECTRIC MANHOLE
- ELECTRIC SPLICE BOX
- TRANSFORMER ON PAD
- ELECTRIC VAULT
- GUY WIRE
- UTILITY POLE
- TREE
- LIGHT POLE
- LIGHT POLE
- SIGN
- GAS METER
- WATER METER
- MONITOR WELL
- GAS REGULATOR
- AIR CONDITIONER – HEAT PUMP
- VALVE – G – GAS W – WATER
- DECORATIVE ROCK
- HORIZONTAL CONTROL POINT
- HORIZONTAL/VERTICAL CONTROL POINT
- VERTICAL CONTROL POINT
- GUARD POST – BOLLARD
- SHRUB
- 735 — MAJOR CONTOUR
- MINOR CONTOUR
- E — EXISTING ELECTRIC AERIAL PRIMARY
- FENCE

ABBREVIATIONS

CONC ---------- CONCRETE
EL ---------- ELEVATION
INV ---------- INVERT
MH ---------- MANHOLE
P ---------- PIPE
OL ---------- OLIVE
VCP ---------- VITRIFIED CLAY PIPE
CMP ---------- CORRUGATED METAL PIPE
S/S ---------- SANITARY SEWER
BT ---------- BLACKTOP
BLDG ---------- BUILDING
NW ---------- NORTHWEST
NE ---------- NORTHEAST
SW ---------- SOUTHWEST
SE ---------- SOUTHEAST
DR ---------- DECORATIVE ROCK

N

SCALE: 1''=100'-0"

100' 0 100'

US Army Corps of Engineers
Sacramento District

Symbol	Description	Date	Approved

Designed by: M. Kindle
Dwn by: R. Stewardson
Spec No.: 1304
Reviewed by: D. Salter
Submitted by: Thomas A. Sobolewski
Chief, GIS & Mapping Section
Date:
Rev.
Design file no: 229-25-539
Drawing Code:
File name: N39V-1100XX.dwg
Plot date:
Dwg scale: 1" = 100' – 0"

DEPARTMENT OF THE ARMY
CORPS OF ENGINEERS
SACRAMENTO, CALIFORNIA

SACRAMENTO DISTRICT
IN-HOUSE DESIGN
1325 "J" STREET
SACRAMENTO, CA 95814-2922

NEVADA
NELLIS AFB
F/A-22 ADD/ALTER WEAPONS SCHOOL
P/N RKMF 063009

INDEX

Sheet reference number:
V-101

Mapping Unit (S/S) No.: 05-05

Reference – Mapping Unit file no.: 229-13-539

Mapping Unit Sheet No.: 1 of 7

Border Revised 08/10/04, CODE#1002.DWG

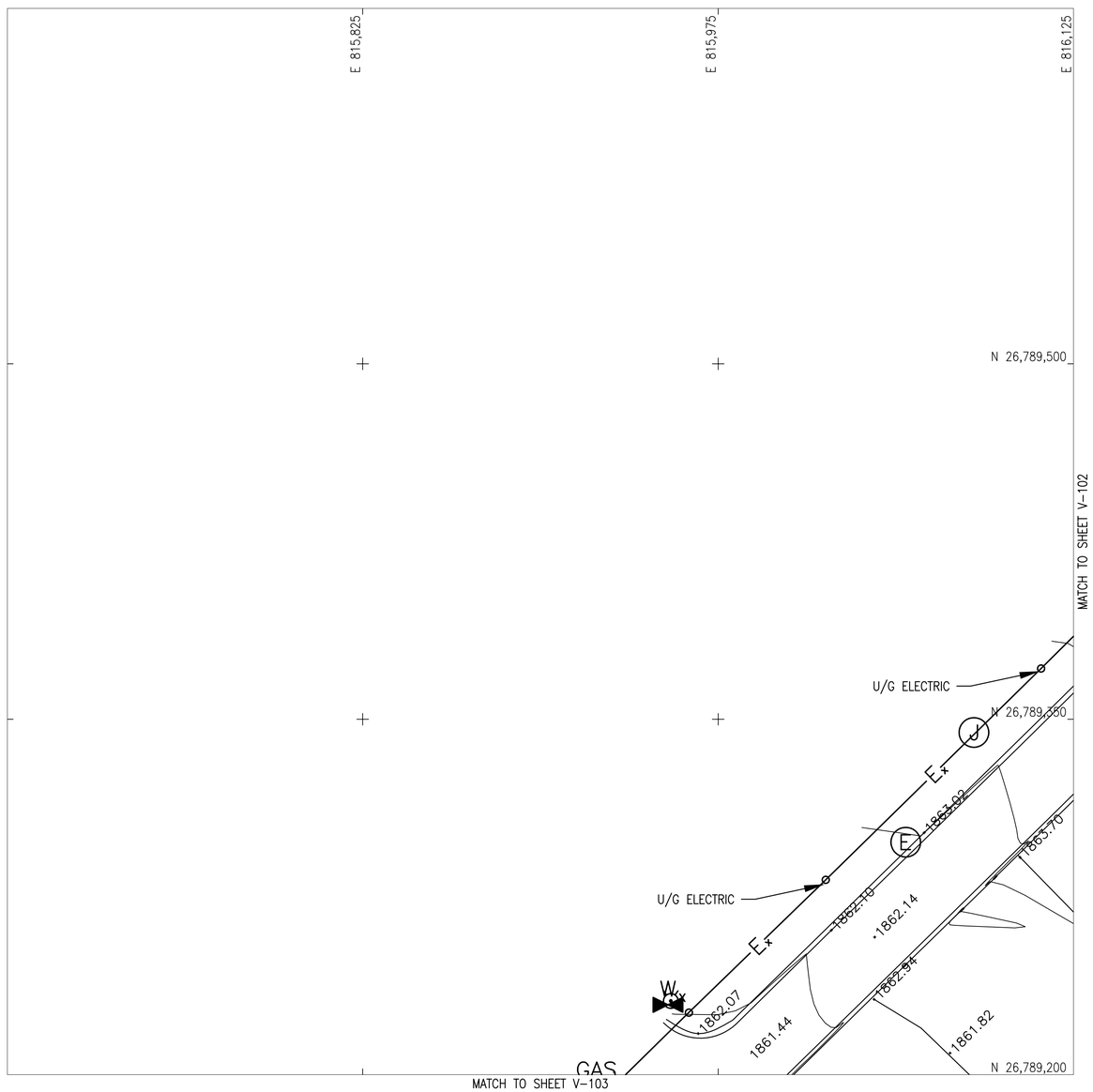

SURVEY NOTES

1. GRID COORDINATES ARE IN FEET AND REFER TO THE NEVADA STATE COORDINATE SYSTEM EAST ZONE, NAD 83, AND ARE BASED ON STATIONS GPS1. GPS4 & GPS5.
2. ELEVATIONS ARE IN FEET AND REFER TO NGVD 1929, AND ARE BASED ON STATION GPS1.
3. TOPOGRAPHY BY GROUND SURVEY METHODS. FIELD SURVEY DATE NOVEMBER 2004.
4. COMBINED SCALE FACTOR IS 0.999839672 FROM GRID TO SCALE.
4. ORIGINAL SURVEY SHOWN ON DRAWING FILE NO. 229-13-539.

CONTROL TABULATION

STATION	NORTH	EAST	MON EL	GR ELEV	DESCRIPTION
GPS1	26,786,749.880	814,152.260	1,850.01	_____	USCE BRASS DISC
GPS4	26,788,289.880	813,836.840	1,865.54	_____	USCE BRASS DISC
GPS5	26,787,766.230	814,164.260	1,858.01	_____	USCE BRASS DISC
505A	26,788,635.222	815,787.071	1,855.86	_____	REBAR w/ALUMINUM CAP
505B	26,788,970.264	816,129.511	1,858.33	_____	REBAR w/ALUMINUM CAP
505C	26,789,190.757	816,453.092	1,860.41	_____	MAG MAIL w/USCOE WASHER
505D	26,789,045.787	816,511.388	1,859.15	_____	MAG MAIL w/USCOE WASHER
505E	26,788,815.312	816,356.095	1,855.81	_____	MAG MAIL w/USCOE WASHER
505F	26,788,698.046	816,208.138	1,855.13	_____	MAG MAIL w/USCOE WASHER
505G	26,788,499.415	816,064.352	1,853.30	_____	MAG MAIL w/USCOE WASHER
505H	26,788,935.487	815,920.232	1,858.73	_____	MAG MAIL w/USCOE WASHER
505I	26,789,190.932	816,109.300	1,861.47	_____	MAG MAIL w/USCOE WASHER
505J	26,789,385.673	816,274.444	1,863.95	_____	MAG MAIL w/USCOE WASHER

SYMBOL LEGEND

- FIRE HYDRANT
- DROP INLET
- SANITARY SEWER MANHOLE
- SEWER CLEAN OUT
- COMMUNICATIONS MANHOLE
- TELEPHONE VAULT
- TELEPHONE
- ELECTRIC PANEL
- ELECTRIC MANHOLE
- ELECTRIC SPLICE BOX
- TRANSFORMER ON PAD
- ELECTRIC VAULT
- GUY WIRE
- UTILITY POLE
- TREE
- LIGHT POLE
- LIGHT POLE
- SIGN
- GAS METER
- WATER METER
- MONITOR WELL
- GAS REGULATOR
- AIR CONDITIONER – HEAT PUMP
- VALVE – G – GAS W – WATER
- DECORATIVE ROCK
- HORIZONTAL CONTROL POINT
- HORIZONTAL/VERTICAL CONTROL POINT
- VERTICAL CONTROL POINT
- GUARD POST – BOLLARD
- SHRUB
- 735 — MAJOR CONTOUR
- MINOR CONTOUR
- E — EXISTING ELECTRIC AERIAL PRIMARY
- FENCE

ABBREVIATIONS

CONC	CONCRETE	S/S	SANITARY SEWER
EL	ELEVATION	BT	BLACKTOP
INV	INVERT	BLDG	BUILDING
MH	MANHOLE	NW	NORTHWEST
P	PIPE	NE	NORTHEAST
OL	OLIVE	SW	SOUTHWEST
VCP	VITRIFIED CLAY PIPE	SE	SOUTHEAST
CMP	CORRUGATED METAL PIPE	DR	DECORATIVE ROCK

N

SCALE: 1"=30'-0"

30' 0 30'

US Army Corps of Engineers
Sacramento District

Symbol	Description	Date	Approved

Designed by: M. Kindle
Dwn by: R. Stewardson
Spec No.: 1304
Reviewed by: D. Salter
Submitted by: Thomas J. Sikobrewski
Chief, GIS & Mapping Section
Date:
Rev:
Design file no: 229-25-539
Drawing Code:
File name: N39V-101XXX.dwg
Plot date:
Dwg scale: 1" = 30' - 0"

DEPARTMENT OF THE ARMY
CORPS OF ENGINEERS
SACRAMENTO, CALIFORNIA

SACRAMENTO DISTRICT
IN-HOUSE DESIGN
1325 "J" STREET
SACRAMENTO, CA 95814-2922

NEVADA
NELLIS AFB
F/A-22 ADD/ALTER WEAPONS SCHOOL
P/N RKMF 063009

TOPOGRAPHY

Sheet reference number:
V-102

Mapping Unit (S/S) No.: 05-05

Mapping Unit Sheet No.: 2 of 7

Reference – Mapping Unit file no.: 229-13-539

Border: Revised 08/30/04, CODE#0202.DWG

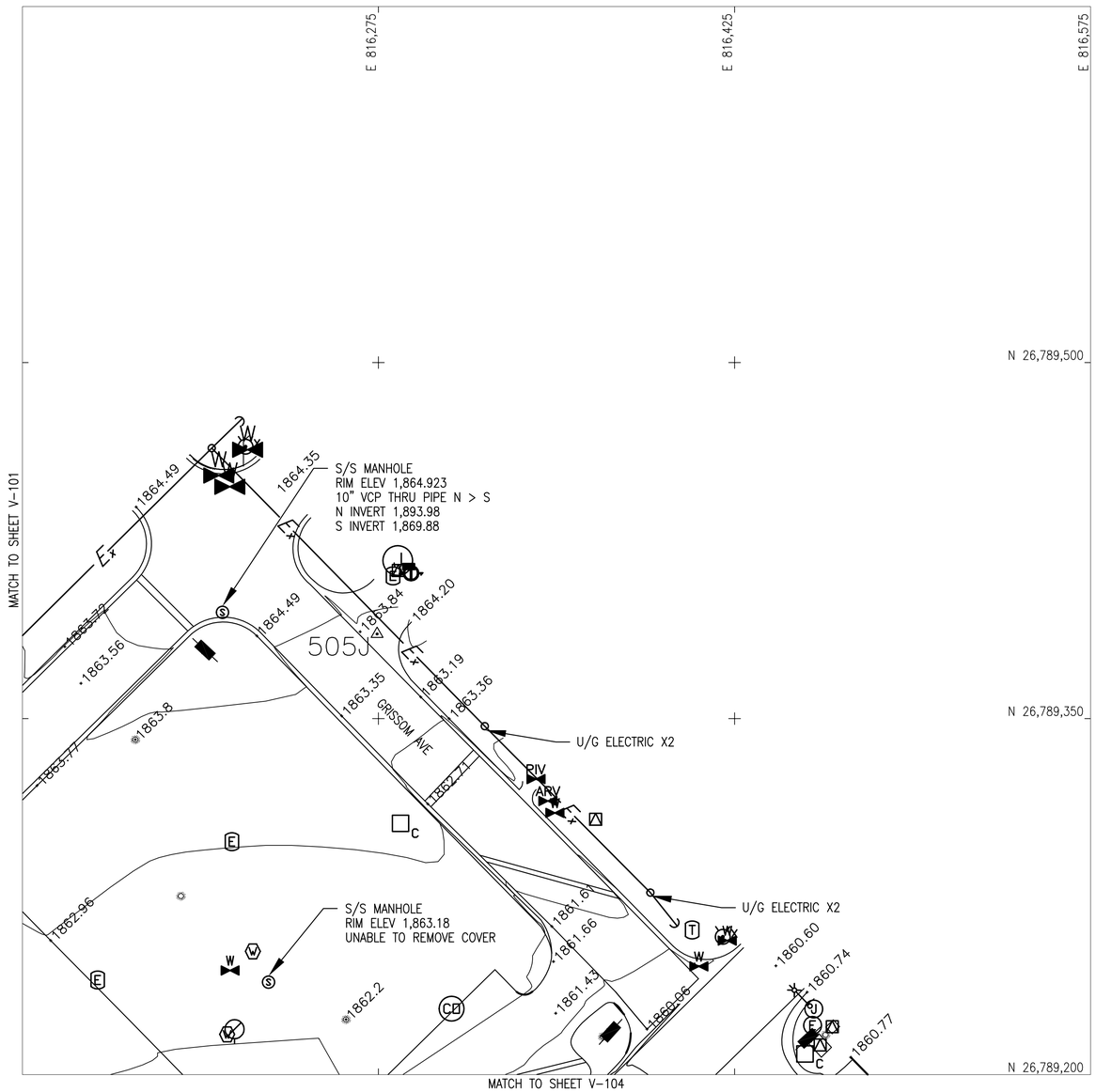

SURVEY NOTES

1. GRID COORDINATES ARE IN FEET AND REFER TO THE NEVADA STATE COORDINATE SYSTEM EAST ZONE, NAD 83, AND ARE BASED ON STATIONS GPS1. GPS4 & GPS5.
2. ELEVATIONS ARE IN FEET AND REFER TO NGVD 1929, AND ARE BASED ON STATION GPS1.
3. TOPOGRAPHY BY GROUND SURVEY METHODS. FIELD SURVEY DATE NOVEMBER 2004.
4. COMBINED SCALE FACTOR IS 0.999839672 FROM GRID TO SCALE.
4. ORIGINAL SURVEY SHOWN ON DRAWING FILE NO. 229-13-539.

CONTROL TABULATION

STATION	NORTH	EAST	MON EL	GR ELEV	DESCRIPTION
GPS1	26,786,749.880	814,152.260	1,850.01	_____	USCE BRASS DISC
GPS4	26,788,289.880	813,836.840	1,865.54	_____	USCE BRASS DISC
GPS5	26,787,766.230	814,164.260	1,858.01	_____	USCE BRASS DISC
505A	26,788,635.222	815,787.071	1,855.86	_____	REBAR w/ALUMINUM CAP
505B	26,788,970.264	816,129.511	1,858.33	_____	REBAR w/ALUMINUM CAP
505C	26,789,190.757	816,453.092	1,860.41	_____	MAG MAIL w/USCOE WASHER
505D	26,789,045.787	816,511.388	1,859.15	_____	MAG MAIL w/USCOE WASHER
505E	26,788,815.312	816,356.095	1,855.81	_____	MAG MAIL w/USCOE WASHER
505F	26,788,698.046	816,208.138	1,855.13	_____	MAG MAIL w/USCOE WASHER
505G	26,788,499.415	816,064.352	1,853.30	_____	MAG MAIL w/USCOE WASHER
505H	26,788,935.487	815,920.232	1,858.73	_____	MAG MAIL w/USCOE WASHER
505I	26,789,190.932	816,109.300	1,861.47	_____	MAG MAIL w/USCOE WASHER
505J	26,789,385.673	816,274.444	1,863.95	_____	MAG MAIL w/USCOE WASHER

SYMBOL LEGEND

- FIRE HYDRANT
- DROP INLET
- SANITARY SEWER MANHOLE
- SEWER CLEAN OUT
- COMMUNICATIONS MANHOLE
- TELEPHONE VAULT
- TELEPHONE
- ELECTRIC PANEL
- ELECTRIC MANHOLE
- ELECTRIC SPLICE BOX
- TRANSFORMER ON PAD
- ELECTRIC VAULT
- GUY WIRE
- UTILITY POLE
- TREE
- LIGHT POLE
- LIGHT POLE
- SIGN
- GAS METER
- WATER METER
- MONITOR WELL
- GAS REGULATOR
- AIR CONDITIONER – HEAT PUMP
- VALVE – G – GAS W – WATER
- DECORATIVE ROCK
- HORIZONTAL CONTROL POINT
- HORIZONTAL/VERTICAL CONTROL POINT
- VERTICAL CONTROL POINT
- GUARD POST – BOLLARD
- SHRUB
- 735 — MAJOR CONTOUR
- MINOR CONTOUR
- E — EXISTING ELECTRIC AERIAL PRIMARY
- FENCE

ABBREVIATIONS

CONC	CONCRETE	S/S	SANITARY SEWER
EL	ELEVATION	BT	BLACKTOP
INV	INVERT	BLDG	BUILDING
MH	MANHOLE	NW	NORTHWEST
P	PIPE	NE	NORTHEAST
OL	OLIVE	SW	SOUTHWEST
VCP	VITRIFIED CLAY PIPE	SE	SOUTHEAST
CMP	CORRUGATED METAL PIPE	DR	DECORATIVE ROCK

N

SCALE: 1"=30'-0"

30' 0 30'

US Army Corps of Engineers
Sacramento District

Symbol	Description	Date	Approved

Designed by: M. Kindle
Dwn by: R. Steverdson
Spec No.: 1304
Reviewed by: D. Salter
Submitted by: Thomas K. Scholewski, Chief, GIS & Mapping Section
Date:
Rev:
Design file no: 229-25-539
Drawing Code:
File name: N39V-101XXX.dwg
Plot date:
Dwg scale: 1" = 30' - 0"

DEPARTMENT OF THE ARMY
CORPS OF ENGINEERS
SACRAMENTO, CALIFORNIA

SACRAMENTO DISTRICT
IN-HOUSE DESIGN
1325 "J" STREET
SACRAMENTO, CA 95814-2922

NEVADA
NELLIS AFB
F/A-22 ADD/ALTER WEAPONS SCHOOL
P/N RKMF 063009

TOPOGRAPHY

Sheet reference number:
V-103

Mapping Unit (S/S) No.: 05-05

Mapping Unit Sheet No.: 3 of 7

Reference – Mapping Unit file no.: 229-13-539

Border Revised 08/20/04, CCESKOTO2.DWG

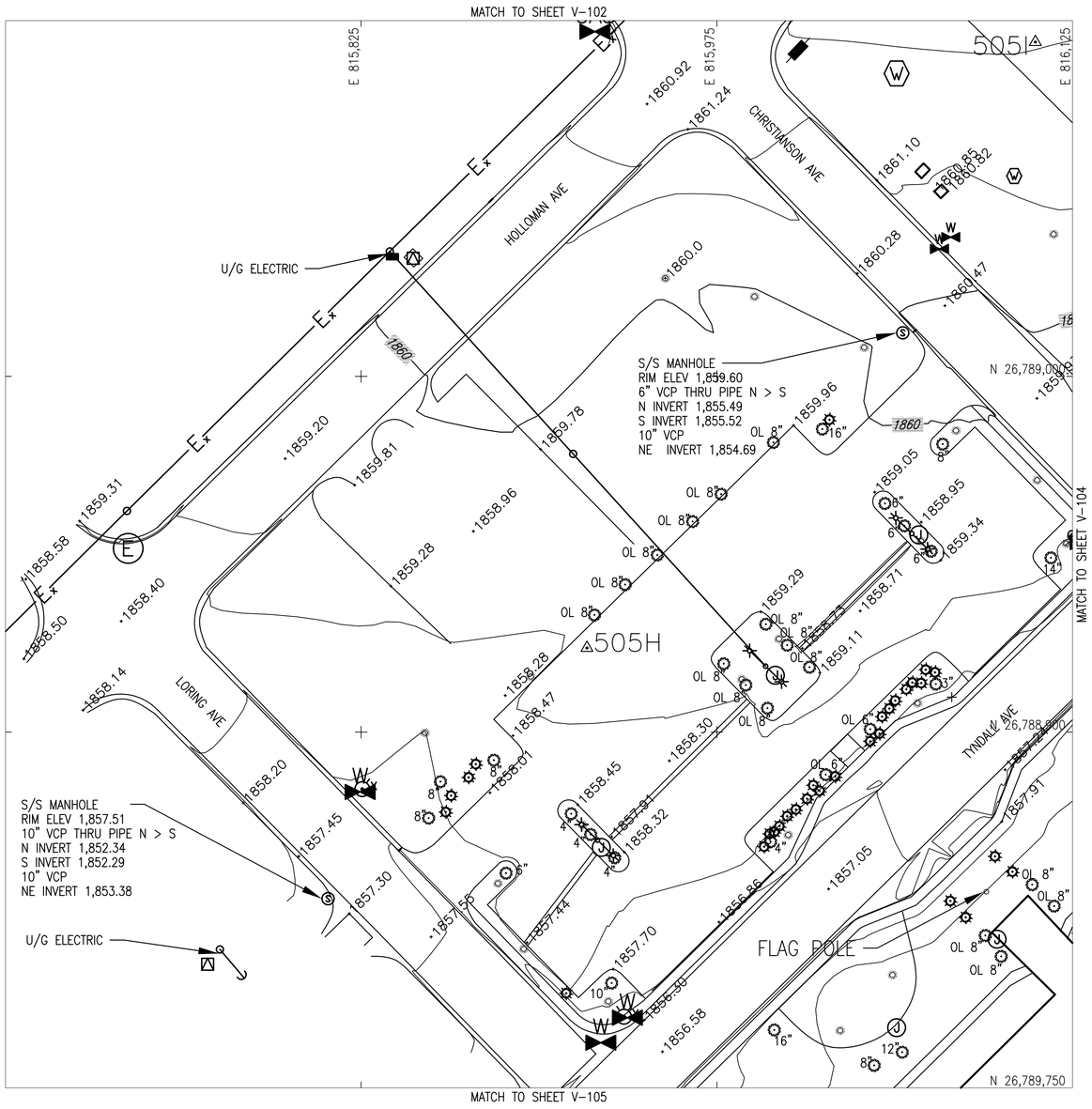

SURVEY NOTES

1. GRID COORDINATES ARE IN FEET AND REFER TO THE NEVADA STATE COORDINATE SYSTEM EAST ZONE, NAD 83, AND ARE BASED ON STATIONS GPS1. GPS4 & GPS5.
2. ELEVATIONS ARE IN FEET AND REFER TO NGVD 1929, AND ARE BASED ON STATION GPS1.
3. TOPOGRAPHY BY GROUND SURVEY METHODS. FIELD SURVEY DATE NOVEMBER 2004.
4. COMBINED SCALE FACTOR IS 0.999839672 FROM GRID TO SCALE.
4. ORIGINAL SURVEY SHOWN ON DRAWING FILE NO. 229-13-539.

CONTROL TABULATION

STATION	NORTH	EAST	MON EL	GR ELEV	DESCRIPTION
GPS1	26,786,749.880	814,152.260	1,850.01	_____	USCE BRASS DISC
GPS4	26,788,289.880	813,836.840	1,865.54	_____	USCE BRASS DISC
GPS5	26,787,766.230	814,164.260	1,858.01	_____	USCE BRASS DISC
505A	26,788,635.222	815,787.071	1,855.86	_____	REBAR w/ALUMINUM CAP
505B	26,788,970.264	816,129.511	1,858.33	_____	REBAR w/ALUMINUM CAP
505C	26,789,190.757	816,453.092	1,860.41	_____	MAG MAIL w/USCOE WASHER
505D	26,789,045.787	816,511.388	1,859.15	_____	MAG MAIL w/USCOE WASHER
505E	26,788,815.312	816,356.095	1,855.81	_____	MAG MAIL w/USCOE WASHER
505F	26,788,698.046	816,208.138	1,855.13	_____	MAG MAIL w/USCOE WASHER
505G	26,788,499.415	816,064.352	1,853.30	_____	MAG MAIL w/USCOE WASHER
505H	26,788,935.487	815,920.232	1,858.73	_____	MAG MAIL w/USCOE WASHER
505I	26,789,190.932	816,109.300	1,861.47	_____	MAG MAIL w/USCOE WASHER
505J	26,789,385.673	816,274.444	1,863.95	_____	MAG MAIL w/USCOE WASHER

SYMBOL LEGEND

- FIRE HYDRANT
- DROP INLET
- SANITARY SEWER MANHOLE
- SEWER CLEAN OUT
- COMMUNICATIONS MANHOLE
- TELEPHONE VAULT
- TELEPHONE
- ELECTRIC PANEL
- ELECTRIC MANHOLE
- ELECTRIC SPLICE BOX
- TRANSFORMER ON PAD
- ELECTRIC VAULT
- GUY WIRE
- UTILITY POLE
- TREE
- LIGHT POLE
- LIGHT POLE
- SIGN
- GAS METER
- WATER METER
- MONITOR WELL
- GAS REGULATOR
- AIR CONDITIONER – HEAT PUMP
- VALVE – G – GAS W – WATER
- DECORATIVE ROCK
- HORIZONTAL CONTROL POINT
- HORIZONTAL/VERTICAL CONTROL POINT
- VERTICAL CONTROL POINT
- GUARD POST – BOLLARD
- SHRUB
- 735 MAJOR CONTOUR
- MINOR CONTOUR
- E EXISTING ELECTRIC AERIAL PRIMARY
- FENCE

ABBREVIATIONS

CONC	CONCRETE	S/S	SANITARY SEWER
EL	ELEVATION	BT	BLACKTOP
INV	INVERT	BLDG	BUILDING
MH	MANHOLE	NW	NORTHWEST
P	PIPE	NE	NORTHEAST
OL	OLIVE	SW	SOUTHWEST
VCP	VITRIFIED CLAY PIPE	SE	SOUTHEAST
CMP	CORRUGATED METAL PIPE	DR	DECORATIVE ROCK

N

SCALE: 1"=30'-0"

30' 0 30'

US Army Corps of Engineers
Sacramento District

Symbol	Description	Date	Approved

Designed by: M. Kindle
Dwn by: R. Stewardson
Spec No.: 1304
Reviewed by: D. Salter
Submitted by: Thomas J. Sobolewski, Chief, GIS & Mapping Section
Date:
Rev:
Design file no: 229-25-539
Drawing Code:
File name: N39V-101XXX.dwg
Plot date:
Dwg scale: 1" = 30' - 0"

DEPARTMENT OF THE ARMY
CORPS OF ENGINEERS
SACRAMENTO, CALIFORNIA

SACRAMENTO DISTRICT
IN-HOUSE DESIGN
1325 "J" STREET
SACRAMENTO, CA 95814-2922

NEVADA
NELLIS AFB
F/A-22 ADD/ALTER WEAPONS SCHOOL
P/N RKMF 063009

TOPOGRAPHY

Sheet reference number:
V-104

Mapping Unit (S/S) No.: 05-05

Mapping Unit Sheet No.: 4 of 7

Reference – Mapping Unit file no.: 229-13-539

Border Revised 08/30/04, CDESKTOP2.DWG

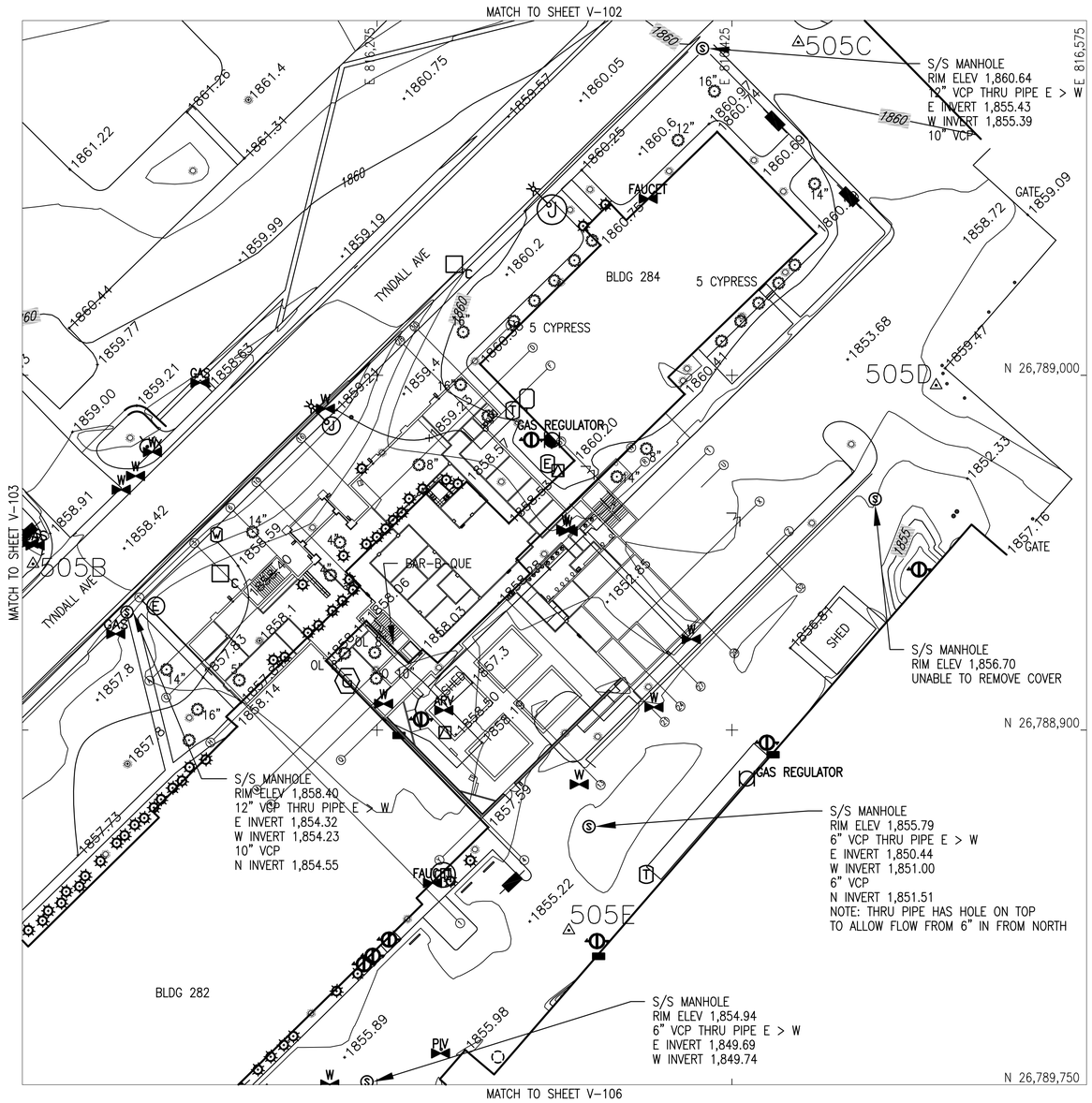

SURVEY NOTES

1. GRID COORDINATES ARE IN FEET AND REFER TO THE NEVADA STATE COORDINATE SYSTEM EAST ZONE, NAD 83, AND ARE BASED ON STATIONS GPS1. GPS4 & GPS5.
2. ELEVATIONS ARE IN FEET AND REFER TO NGVD 1929, AND ARE BASED ON STATION GPS1.
3. TOPOGRAPHY BY GROUND SURVEY METHODS. FIELD SURVEY DATE NOVEMBER 2004.
4. COMBINED SCALE FACTOR IS 0.999839672 FROM GRID TO SCALE.
4. ORIGINAL SURVEY SHOWN ON DRAWING FILE NO. 229-13-539.

CONTROL TABULATION

STATION	NORTH	EAST	MON EL	GR ELEV	DESCRIPTION
GPS1	26,786,749.880	814,152.260	1,850.01	_____	USCE BRASS DISC
GPS4	26,788,289.880	813,836.840	1,865.54	_____	USCE BRASS DISC
GPS5	26,787,766.230	814,164.260	1,858.01	_____	USCE BRASS DISC
505A	26,788,635.222	815,787.071	1,855.86	_____	REBAR w/ALUMINUM CAP
505B	26,788,970.264	816,129.511	1,858.33	_____	REBAR w/ALUMINUM CAP
505C	26,789,190.757	816,453.092	1,860.41	_____	MAG MAIL w/USCOE WASHER
505D	26,789,045.787	816,511.388	1,859.15	_____	MAG MAIL w/USCOE WASHER
505E	26,788,815.312	816,356.095	1,855.81	_____	MAG MAIL w/USCOE WASHER
505F	26,788,698.046	816,208.138	1,855.13	_____	MAG MAIL w/USCOE WASHER
505G	26,788,499.415	816,064.352	1,853.30	_____	MAG MAIL w/USCOE WASHER
505H	26,788,935.487	815,920.232	1,858.73	_____	MAG MAIL w/USCOE WASHER
505I	26,789,190.932	816,109.300	1,861.47	_____	MAG MAIL w/USCOE WASHER
505J	26,789,385.673	816,274.444	1,863.95	_____	MAG MAIL w/USCOE WASHER

SYMBOL LEGEND

- FIRE HYDRANT
- DROP INLET
- SANITARY SEWER MANHOLE
- SEWER CLEAN OUT
- COMMUNICATIONS MANHOLE
- TELEPHONE VAULT
- TELEPHONE
- ELECTRIC PANEL
- ELECTRIC MANHOLE
- ELECTRIC SPLICE BOX
- TRANSFORMER ON PAD
- ELECTRIC VAULT
- GUY WIRE
- UTILITY POLE
- TREE
- LIGHT POLE
- LIGHT POLE
- SIGN
- GAS METER
- WATER METER
- MONITOR WELL
- GAS REGULATOR
- AIR CONDITIONER – HEAT PUMP
- VALVE – G – GAS W – WATER
- DECORATIVE ROCK
- HORIZONTAL CONTROL POINT
- HORIZONTAL/VERTICAL CONTROL POINT
- VERTICAL CONTROL POINT
- GUARD POST – BOLLARD
- SHRUB
- 735 — MAJOR CONTOUR
- MINOR CONTOUR
- E — EXISTING ELECTRIC AERIAL PRIMARY
- FENCE

ABBREVIATIONS

CONC	CONCRETE	S/S	SANITARY SEWER
EL	ELEVATION	BT	BLACKTOP
INV	INVERT	BLDG	BUILDING
MH	MANHOLE	NW	NORTHWEST
P	PIPE	NE	NORTHEAST
OL	OLIVE	SW	SOUTHWEST
VCP	VITRIFIED CLAY PIPE	SE	SOUTHEAST
CMP	CORRUGATED METAL PIPE	DR	DECORATIVE ROCK

N

SCALE: 1''=30'-0"

30' 0 30'

US Army Corps of Engineers
Sacramento District

Symbol	Description	Date	Approved

Designed by: M. Kindle
Dwn by: R. Stewardson
Spec No.: 1304
Reviewed by: D. Salter
Submitted by: Thomas K. Scholewski
Chief, GIS & Mapping Section
Date:
Rev.
Design file no: 229-25-539
Drawing Code:
File name: N39V-101XXX.dwg
Plot date:
Dwg scale: 1" = 30' - 0"

DEPARTMENT OF THE ARMY
CORPS OF ENGINEERS
SACRAMENTO, CALIFORNIA

SACRAMENTO DISTRICT
IN-HOUSE DESIGN
1325 'J' STREET
SACRAMENTO, CA 95814-2922

NEVADA

NELLIS AFB
F/A-22 ADD/ALTER WEAPONS SCHOOL
P/N RKMF 063009

TOPOGRAPHY

Sheet reference number:
V-105

Mapping Unit (S/S) No.: 05-05

Mapping Unit Sheet No.: 5 of 7

Reference – Mapping Unit file no.: 229-13-539

Border Revised 08/20/04, 10230102.DWG

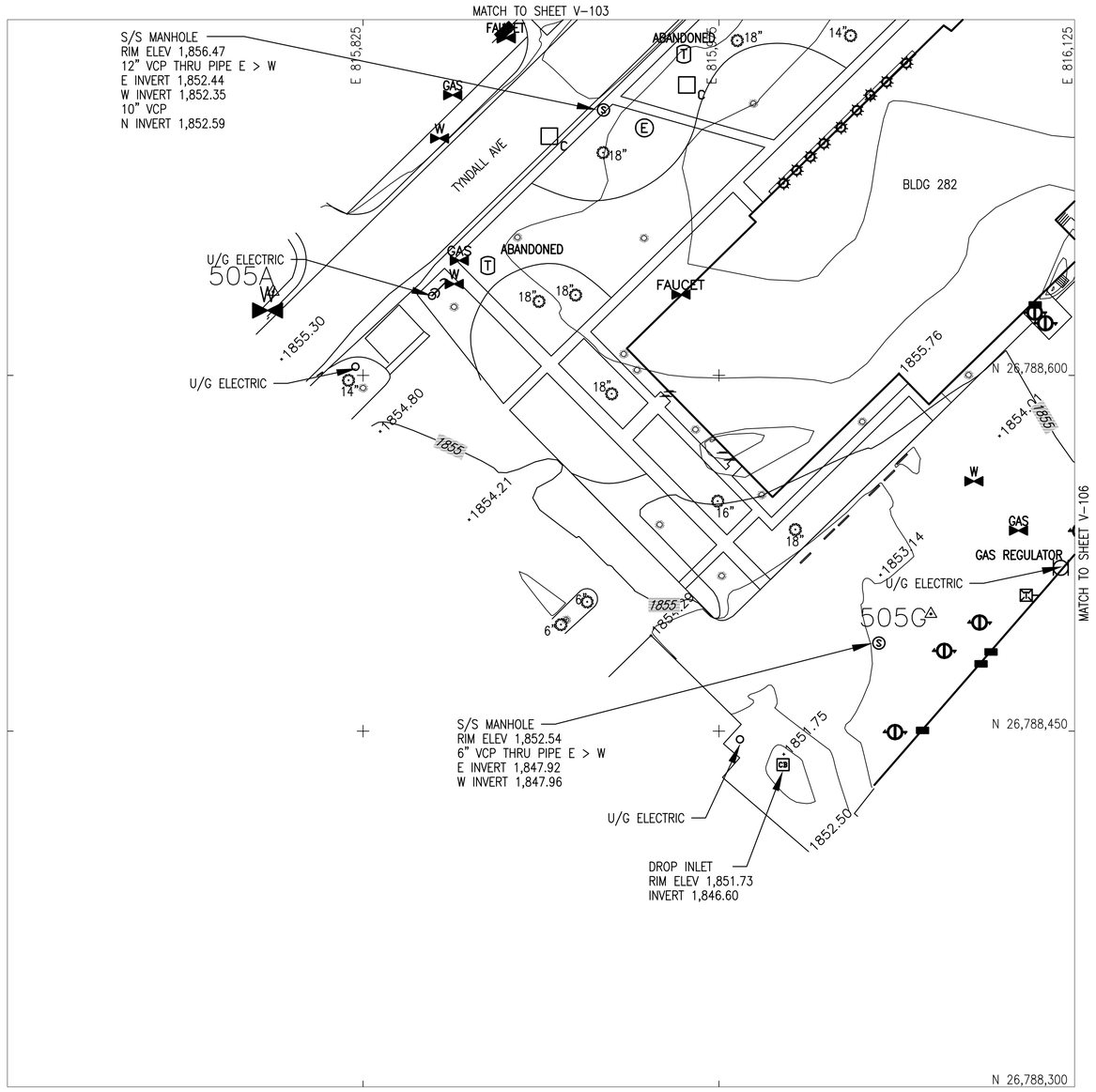

SURVEY NOTES

1. GRID COORDINATES ARE IN FEET AND REFER TO THE NEVADA STATE COORDINATE SYSTEM EAST ZONE, NAD 83, AND ARE BASED ON STATIONS GPS1. GPS4 & GPS5.
2. ELEVATIONS ARE IN FEET AND REFER TO NGVD 1929, AND ARE BASED ON STATION GPS1.
3. TOPOGRAPHY BY GROUND SURVEY METHODS. FIELD SURVEY DATE NOVEMBER 2004.
4. COMBINED SCALE FACTOR IS 0.999839672 FROM GRID TO SCALE.
4. ORIGINAL SURVEY SHOWN ON DRAWING FILE NO. 229-13-539.

CONTROL TABULATION

STATION	NORTH	EAST	MON EL	GR ELEV	DESCRIPTION
GPS1	26,786,749.880	814,152.260	1,850.01	_____	USCE BRASS DISC
GPS4	26,788,289.880	813,836.840	1,865.54	_____	USCE BRASS DISC
GPS5	26,787,766.230	814,164.260	1,858.01	_____	USCE BRASS DISC
505A	26,788,635.222	815,787.071	1,855.86	_____	REBAR w/ALUMINUM CAP
505B	26,788,970.264	816,129.511	1,858.33	_____	REBAR w/ALUMINUM CAP
505C	26,789,190.757	816,453.092	1,860.41	_____	MAG MAIL w/USCOE WASHER
505D	26,789,045.787	816,511.388	1,859.15	_____	MAG MAIL w/USCOE WASHER
505E	26,788,815.312	816,356.095	1,855.81	_____	MAG MAIL w/USCOE WASHER
505F	26,788,698.046	816,208.138	1,855.13	_____	MAG MAIL w/USCOE WASHER
505G	26,788,499.415	816,064.352	1,853.30	_____	MAG MAIL w/USCOE WASHER
505H	26,788,935.487	815,920.232	1,858.73	_____	MAG MAIL w/USCOE WASHER
505I	26,789,190.932	816,109.300	1,861.47	_____	MAG MAIL w/USCOE WASHER
505J	26,789,385.673	816,274.444	1,863.95	_____	MAG MAIL w/USCOE WASHER

SYMBOL LEGEND

- FIRE HYDRANT
- DROP INLET
- SANITARY SEWER MANHOLE
- SEWER CLEAN OUT
- COMMUNICATIONS MANHOLE
- TELEPHONE VAULT
- TELEPHONE
- ELECTRIC PANEL
- ELECTRIC MANHOLE
- ELECTRIC SPLICE BOX
- TRANSFORMER ON PAD
- ELECTRIC VAULT
- GUY WIRE
- UTILITY POLE
- TREE
- LIGHT POLE
- LIGHT POLE
- SIGN
- GAS METER
- WATER METER
- MONITOR WELL
- GAS REGULATOR
- AIR CONDITIONER – HEAT PUMP
- VALVE – G – GAS W – WATER
- DECORATIVE ROCK
- HORIZONTAL CONTROL POINT
- HORIZONTAL/VERTICAL CONTROL POINT
- VERTICAL CONTROL POINT
- GUARD POST – BOLLARD
- SHRUB
- 735 MAJOR CONTOUR
- MINOR CONTOUR
- EXISTING ELECTRIC AERIAL PRIMARY
- FENCE

ABBREVIATIONS

CONC	CONCRETE	S/S	SANITARY SEWER
EL	ELEVATION	BT	BLACKTOP
INV	INVERT	BLDG	BUILDING
MH	MANHOLE	NW	NORTHWEST
P	PIPE	NE	NORTHEAST
OL	OLIVE	SW	SOUTHWEST
VCP	VITRIFIED CLAY PIPE	SE	SOUTHEAST
CMP	CORRUGATED METAL PIPE	DR	DECORATIVE ROCK

N

SCALE: 1"=30'-0"

30' 0 30'

US Army Corps of Engineers
Sacramento District

Symbol	Description	Date	Approved

Designed by: M. Kindle
Dwn by: R. Stewardson
Spec No.: 1304
Rev:
Date:
Design file no: 229-25-539
Drawing Code:
Reviewed by: D. Salter
File name: N39V-101XXX.dwg
Plot date:
Dwg scale: 1" = 30' - 0"
Submitted by: Thomas K. Dobkiewski
Chief, GIS & Mapping Section

DEPARTMENT OF THE ARMY
CORPS OF ENGINEERS
SACRAMENTO, CALIFORNIA

SACRAMENTO DISTRICT
IN-HOUSE DESIGN
1325 J STREET
SACRAMENTO, CA 95814-2922

NEVADA

NELLIS AFB
F/A-22 ADD/ALTER WEAPONS SCHOOL
P/N RKMF 063009

TOPOGRAPHY

Sheet reference number:
V-106

Mapping Unit (S/S) No.: 05-05

Mapping Unit Sheet No.: 6 of 7

Reference – Mapping Unit file no.: 229-13-539

Border Revised 08/30/04, CCESHEET22.DWG

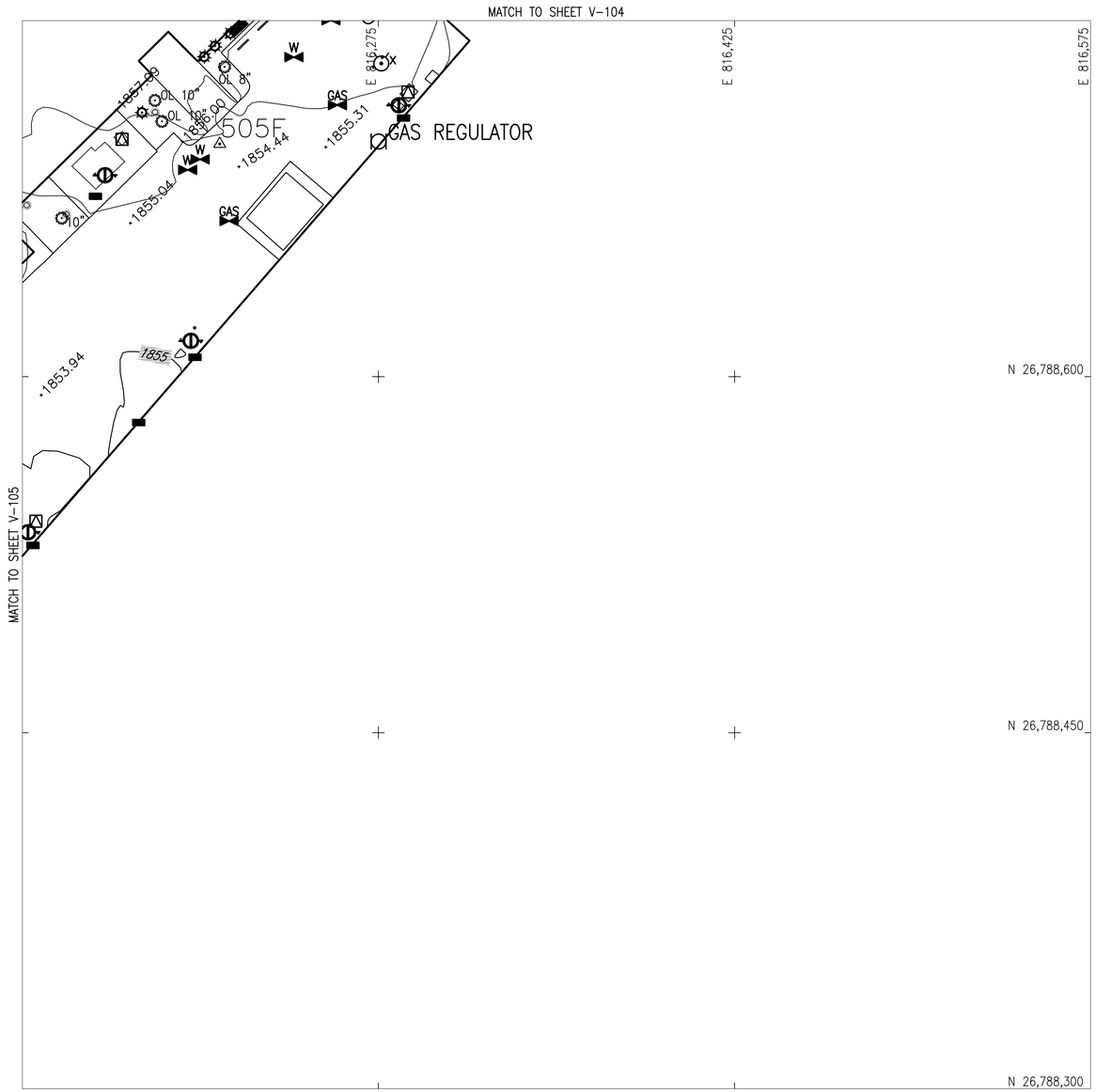

SURVEY NOTES

1. GRID COORDINATES ARE IN FEET AND REFER TO THE NEVADA STATE COORDINATE SYSTEM EAST ZONE, NAD 83, AND ARE BASED ON STATIONS GPS1. GPS4 & GPS5.
2. ELEVATIONS ARE IN FEET AND REFER TO NGVD 1929, AND ARE BASED ON STATION GPS1.
3. TOPOGRAPHY BY GROUND SURVEY METHODS. FIELD SURVEY DATE NOVEMBER 2004.
4. COMBINED SCALE FACTOR IS 0.999839672 FROM GRID TO SCALE.
4. ORIGINAL SURVEY SHOWN ON DRAWING FILE NO. 229-13-539.

CONTROL TABULATION

STATION	NORTH	EAST	MON EL	GR ELEV	DESCRIPTION
GPS1	26,786,749.880	814,152.260	1,850.01	_____	USCE BRASS DISC
GPS4	26,788,289.880	813,836.840	1,865.54	_____	USCE BRASS DISC
GPS5	26,787,766.230	814,164.260	1,858.01	_____	USCE BRASS DISC
505A	26,788,635.222	815,787.071	1,855.86	_____	REBAR w/ALUMINUM CAP
505B	26,788,970.264	816,129.511	1,858.33	_____	REBAR w/ALUMINUM CAP
505C	26,789,190.757	816,453.092	1,860.41	_____	MAG MAIL w/USCOE WASHER
505D	26,789,045.787	816,511.388	1,859.15	_____	MAG MAIL w/USCOE WASHER
505E	26,788,815.312	816,356.095	1,855.81	_____	MAG MAIL w/USCOE WASHER
505F	26,788,698.046	816,208.138	1,855.13	_____	MAG MAIL w/USCOE WASHER
505G	26,788,499.415	816,064.352	1,853.30	_____	MAG MAIL w/USCOE WASHER
505H	26,788,935.487	815,920.232	1,858.73	_____	MAG MAIL w/USCOE WASHER
505I	26,789,190.932	816,109.300	1,861.47	_____	MAG MAIL w/USCOE WASHER
505J	26,789,385.673	816,274.444	1,863.95	_____	MAG MAIL w/USCOE WASHER

SYMBOL LEGEND

- FIRE HYDRANT
- DROP INLET
- SANITARY SEWER MANHOLE
- SEWER CLEAN OUT
- COMMUNICATIONS MANHOLE
- TELEPHONE VAULT
- TELEPHONE
- ELECTRIC PANEL
- ELECTRIC MANHOLE
- ELECTRIC SPLICE BOX
- TRANSFORMER ON PAD
- ELECTRIC VAULT
- GUY WIRE
- UTILITY POLE
- TREE
- LIGHT POLE
- LIGHT POLE
- SIGN
- GAS METER
- WATER METER
- MONITOR WELL
- GAS REGULATOR
- AIR CONDITIONER – HEAT PUMP
- VALVE – G – GAS W – WATER
- DECORATIVE ROCK
- HORIZONTAL CONTROL POINT
- HORIZONTAL/VERTICAL CONTROL POINT
- VERTICAL CONTROL POINT
- GUARD POST – BOLLARD
- SHRUB
- 735 — MAJOR CONTOUR
- MINOR CONTOUR
- E — EXISTING ELECTRIC AERIAL PRIMARY
- FENCE

ABBREVIATIONS

CONC	CONCRETE	S/S	SANITARY SEWER
EL	ELEVATION	BT	BLACKTOP
INV	INVERT	BLDG	BUILDING
MH	MANHOLE	NW	NORTHWEST
P	PIPE	NE	NORTHEAST
OL	OLIVE	SW	SOUTHWEST
VCP	VITRIFIED CLAY PIPE	SE	SOUTHEAST
CMP	CORRUGATED METAL PIPE	DR	DECORATIVE ROCK

N

SCALE: 1"=30'-0"

30' 0 30'

US Army Corps of Engineers
Sacramento District

Symbol	Description	Date	Approved

Designed by: M. Kindle
Dwn by: R. Stewartson
Spec No.: 1304
Reviewed by: D. Salter
Submitted by: Thomas A. Dobbowski, Chief, GIS & Mapping Section
Date:
Rev.
Design file no: 229-25-539
Drawing Code:
File name: N39V-101XXX.dwg
Plot date:
Dwg scale: 1" = 30' - 0"

DEPARTMENT OF THE ARMY
CORPS OF ENGINEERS
SACRAMENTO, CALIFORNIA

SACRAMENTO DISTRICT
IN-HOUSE DESIGN
1325 "J" STREET
SACRAMENTO, CA 95814-2922

NEVADA
NELLIS AFB
F/A-22 ADD/ALTER WEAPONS SCHOOL
P/N RMF 063009

TOPOGRAPHY

Sheet reference number:
V-107

Mapping Unit (S/S) No.: 05-05

Mapping Unit Sheet No.: 7 of 7

Reference – Mapping Unit file no.: 229-13-539

Border Revised 08/20/04 CDESIGN.DWG

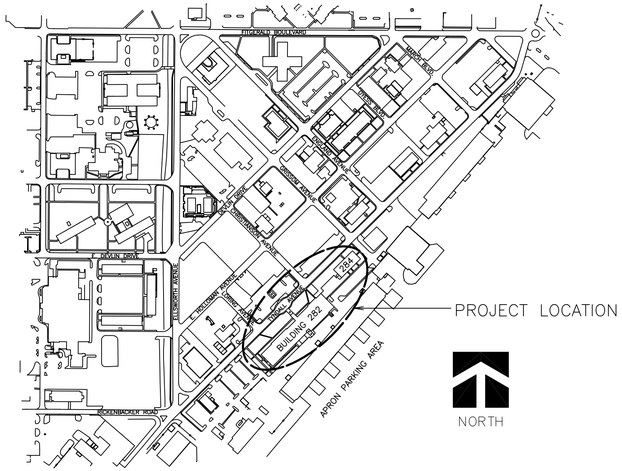

-PROJECT LOCATION-

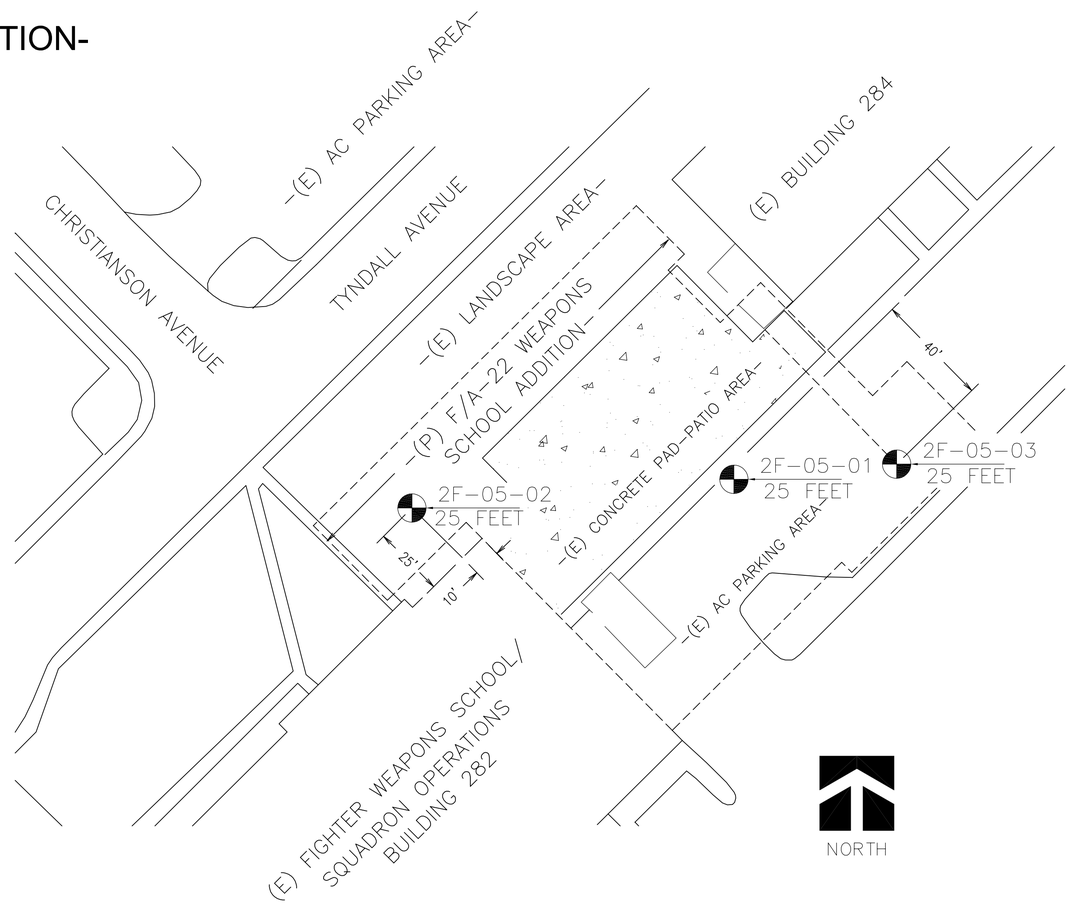

-LOCATION OF EXPLORATIONS-

LEGEND:

2F-05-01	Location of Explorations.
SM	Combined Field Visual Identification and/or Laboratory Classification.
N	Number of Blows with the Standard Penetrometer.
B.O.H.	Bottom of Hole.
TSP	Tons per Square Foot

NOTES:

1. This drawing is to be used only for approximate location of explorations and description of subsurface conditions.
2. Soil classifications and descriptions are based on field log descriptions in accordance with ASTM D 2488 ("Description and Identifications of Soils, Visual-Manual Procedure") and/or laboratory test results in accordance with ASTM 2487 ("Classification of Soils for Engineering Purposes").
3. All sieve sizes shown are U.S. Standard.
4. Standard Penetrometer data were obtained in accordance with ASTM D 1586 utilizing a 1-3/8-inch i.d., 2-inch o.d., 24-inch long split-spoon sampler with a 140-pound automatic trip hammer with 30-inch drop
5. Explorations were drilled with a Gardner-Denver AU-1000 air-water rotary drill rig utilizing 4-inch drag and tricone bits. Soils were field logged by J.P. Chambers on 23 March 2005.
6. Groundwater was not encountered at the time of explorations; however, groundwater levels can be expected to fluctuate in response to rainfall variations, particularly in the vicinity of site drainage features.
7. Depending on the soil moisture at the time of construction, the soil encountered may be unstable or potentially unstable. The probability of unstable conditions is highest when the soil moisture is greatest.
8. Thickness of pavement section shown is that at location of explorations; thickness may vary at other locations.
9. Additional Logs of Explorations are shown on Sheet No. B102

STANDARD PENETROMETER DESCRIPTIVE DATA

COHESIONLESS		COHESIVE	
BLOWS*	RELATIVE DENSITY	BLOWS*	CONSISTENCY
0-4	VERY LOOSE	0-1	VERY SOFT
5-10	LOOSE	2-4	SOFT
11-20	FIRM	5-8	FIRM
21-30	VERY FIRM	9-15	STIFF
31-50	DENSE	16-30	VERY STIFF
51+	VERY DENSE	31+	HARD

* BLOWS PER 1.0 FT. OF PENETRATION OF A 2-INCH O.D. AND 1 3/8-INCH I.D. SAMPLER DRIVEN BY A 140-LB. HAMMER, 30-INCH FREEFALL.

US Army Corps of Engineers
Sacramento District

Symbol	Description	Date	Approved

Designed by: JOHN P. CHAMBERS
Dwn by: K. PHAN
Ckd by: J. CHAMBERS
Spec No.: 1304
Date:
Rev:
Design file no:
Drawing Code:
Reviewed by:
Submitted by: CHIEF, GEOTECHNICAL DESIGN SECTION
File name: 229-01-539
Plot date:
Dwg scale: AS NOTED

DEPARTMENT OF THE ARMY
CORPS OF ENGINEERS
SACRAMENTO, CALIFORNIA

SACRAMENTO DISTRICT
IN-HOUSE DESIGN
1325 "J" STREET
SACRAMENTO, CA 95814-2922

NELLIS AIR FORCE BASE NEVADA

F/A-22 ADD/ALTER WEAPONS SCHOOL
PN: RKMF063009

LEGEND AND NOTES

Sheet reference number:
B-101

Soil Design Section Sheet No.: 1 of 2

Reference - Exploration Log file no.: 229-01-558

Border: Revised 08/20/04, CKESIGTD2.DWG

2 F – 0 5 – 01

N 26,788,948; E 816,223

EL. 1858'± = 0

Depth	Soil	N	Description
0.5'	GP		POORLY GRADED GRAVEL, GP: SUBANGULAR TO SUB-ROUNDED GRAVEL TO 3-INCH MAXIMUM SIZE; LAND-SCAPE ROCK; TRACE OF COBBLE SIZED MATERIAL
2.5'	ML	6	SILT WITH SAND, ML: FIRM; MOIST; BROWN; 80% LOW PLASTICITY FINES; 20% FINE SAND; STRONG REACTION WITH HCl; NO ODOR
3.5'		11	SILT, ML: STIFF; DRY; GRAY; 95% LOW PLASTICITY FINES; 5 % FINE SAND; STRONG REACTION WITH HCl; NO ODOR
4.5'	GM		SILTY GRAVEL WITH SAND, GM: FIRM; MOIST; BROWN; 40% FINE TO COARSE, SUBANGULAR TO SUBROUNDED GRAVEL TO 1-INCH MAXIMUM SIZE; 30% FINE TO COARSE, SUBANGULAR TO SUBROUNDED SAND; 30% LOW PLASTICITY FINES; STRONG REACTION WITH HCl; NO ODOR; POSSIBLE UTILITY TRENCH BEDDING MATERIAL
	CL	7	
7.5'		9	LEAN CLAY, CL: FIRM; MOIST; BROWN; 95% MEDIUM PLASTICITY FINES; 5% FINE SAND; STRONG REACTION WITH HCl; POCKET PENETROMETER: 2.0 TSF
	ML		SILT, ML: FIRM; MOIST-WET; WHITE- LIGHT GRAY; 95% LOW PLASTICITY FINES; 5% FINE SAND; STRONG REAC-TION WITH HCl; NO ODOR; POCKET PENETROMETER: 1.0 TSF
		5	
10.0'			SILT, ML: STIFF; MOIST; LIGHT GRAY; 95% LOW PLASTICITY FINES; 5% FINE SAND; NO ODOR; CALICHE CHUNKS TO 1-INCH MAXIMUM SIZE
		14	
12.5'		19	AT 12.5', AS ABOVE EXCEPT VERY STIFF, MODERATE CEMENTATION
14.5'	CL		LEAN CLAY, CL: STIFF; MOIST; BROWN; 95% MEDIUM PLASTICITY FINES; 5% FINE SAND
15.5'		17	SILT, ML: STIFF TO VERY STIFF; MOIST; LIGHT GRAY; LOW PLASTICITY FINES; HIGHLY CEMENTED LAYERS; CALICHE CHUNKS TO 3/4-INCH MAXIMUM SIZE
	ML		
17.5'		16	
	CL		LEAN CLAY, CL: STIFF; MOIST; BROWN; 95% MEDIUM PLASTICITY FINES; 5% FINE SAND; POCKET PENETRO-METER: 1.25 TSF
18.5'			SILT, ML: HARD; DRY; WHITE-LIGHT GRAY; LOW PLASTICITY FINES; HIGHLY CEMENTED
		67	
20.0'			AT 20.0'', AS ABOVE EXCEPT FIRM
	ML		
		6	
			AT 23.5 FEET, AS ABOVE EXCEPT VERY STIFF; CALICHE CHUNKS TO 1/2-INCH MAXIMUM SIZE
23.5'		17	
24.0'			

B.O.H

2 F – 0 5 – 02

N 26,788,952; E 816,334

EL. 1858'± = 0

Depth	Soil	N	Description
0.5'	PS		0.0 FEET TO 0.5 FEET: PAVEMENT SECTION: 2 INCH BITUMINOUS COURSE ON A 4-INCH AGGREGATE BASE COURSE
		14	SILT, ML: STIFF; MOIST; LIGHT GRAY; LOW PLASTICITY FINES; STRONG REACTION WITH HCl; NO ODOR; POCKET PENETROMETER: 1.5 TSF
3.0'			
3.5'	ML	10	SANDY SILT WITH GRAVEL, ML: STIFF; MOIST; GRAY; 60% LOW PLASTICITY FINES; 20% FINE TO COARSE, SUB- ANGULAR SAND; 20% FINE TO COARSE, SUBANGULAR GRAVEL TO 3/4-INCH MAXIMUM SIZE; POSSIBLE UTILITY TRENCH BEDDING MATERIAL
4.5'		6	SILT, ML: STIFF; DRY; LIGHT GRAY; LOW PLASTICITY FINES; STRONG REACTION WITH HCl; NO ODOR; POCKET PENETROMETER: 1.5 TSF
7.0'	CL	10	AT 4.5 FEET, AS ABOVE EXCEPT 95% LOW PLASTICITY FINES; 5% FINE SAND; CHUNKS OF CALICHE TO 1-INCH MAXIMUM SIZE
8.5'			LEAN CLAY, CL: STIFF; MOIST; BROWN; 95% MEDIUM PLASTICITY FINES; 5% FINE SAND; WEAK REACTION WITH HCl; POCKET PENETROMETER: 1.0 TSF
		56	SILT, ML: HARD; MOIST; GRAY; 95% LOW PLASTICITY FINES; 5 % FINE SAND; STRONG REACTION WITH HCl; NO ODOR; POCKET PENETROMETER: 2.0 TSF
10.0'			SILT, ML: VERY STIFF; DRY; LIGHT GRAY; 95% LOW PLASTICITY FINES; 5% FINE SAND; NO ODOR; CALICHE CHUNKS TO 1/4-INCH MAXIMUM SIZE
		22	
12.5'			AT 12.5 FEET, AS ABOVE EXCEPT CALICHE CHUNKS TO ½-INCH MAXIMUM SIZE, POCKET PENETROMETER: 1.5 TSF
	ML	29	
14.5'			AT 14.5 FEET, AS ABOVE EXCEPT MOIST; CALICHE CHUCKS TO 3/4-INCH MAXIMUM SIZE; POCKET PENETROMETER: 2.5 TSF
		23	
17.0'			AT 17.0, AS ABOVE EXCEPT STIFF; HIGHLY CEMENTED LENSES TO 1-INCH THICK; POCKET PENETROMETER: 0.5 TSF
		12	
18.5'	CL		LEAN CLAY, CL: FIRM; MOIST; BROWN; 95% MEDIUM PLASTICITY FINES; 5% FINE SAND; POCKET PENETRO-METER: 0.5 TSF
19.0'	ML		
19.5'		8	SILT, ML: FIRM; MOIST; LIGHT GRAY; 95% LOW PLASTICITY FINES; 5% FINE SAND; POCKET PENETROMETER: 1.0 TSF
20.5'	CL		
21.5'		18	LEAN CLAY, CL: FIRM; MOIST; BROWN; 95% MEDIUM PLASTICITY FINES; 5% FINE SAND; POCKET PENETRO-METER: 1.0 TSF 20.5 FEET, AS ABOVE EXCEPT STIFF; 100% MEDIUM PLASTICITY FINES
23.0'	ML		
24.0'		44	SILT, ML: STIFF; DRY; LIGHT GRAY; LOW PLASTICITY FINES; POCKET PENETROMETER: 1.5 TSF AT 23.0 FEET, AS ABOVE EXCEPT HARD; STRONG CEMENTATION; POCKET PENETROMETER: 2.0 TSF

B.O.H

2 F – 0 5 – 03

N 26,788,955; E 816,395

EL. 1858'± = 0

Depth	Soil	N	Description
0.5'	PS		0.0 FEET TO 0.5 FEET: PAVEMENT SECTION: 2 INCH BITUMINOUS COURSE ON A 4-INCH AGGREGATE BASE COURSE
		16	SILT, ML: VERY STIFF; DRY; LIGHT BROWN; LOW PLAS-TICITY FINES; STRONG REACTION WITH HCl; NO ODOR
2.5'			
	ML	15	SANDY SILT WITH GRAVEL, ML: STIFF; DRY; LIGHT BROWN; 60% LOW PLASTICITY FINES; 20% FINE TO COARSE, SUB-ANGULAR SAND; 20% FINE TO COARSE, SUBROUNDED GRAVEL TO 3/4-INCH MAXIMUM SIZE; STRONG REACTION WITH HCl; POSSIBLE FILL MATERIAL
4.5'		9	SILT, ML: STIFF; MOIST; LIGHT BROWN; LOW PLASTICITY FINES; STRONG REACTION WITH HCl; NO ODOR; POCKET PENETROMETER: 2.5 TSF
6.5'	GC		CLAYEY GRAVEL, GC: 60% FINE, SUBROUNDED GRAVEL TO 3/4-INCH MAXIMUM SIZE; 40% MEDIUM PLASTICITY FINES
7.0'		8	
	CL		LEAN CLAY, CL: FIRM; MOIST; BROWN; 95% MEDIUM PLASTICITY FINES; 5% FINE SAND; WEAK REACTION WITH HCl; POCKET PENETROMETER: 2.0 TSF
		7	
		8	
12.0'	ML		SILT, ML: FIRM; DRY; LIGHT BROWN; LOW PLASTICITY FINES; NO ODOR
13.0'	SM	18	LEAN CLAY, CL: VERY STIFF; MOIST; BROWN; MEDIUM PLASTICITY FINES; NO ODOR; POCKET PENETROMETER: 1.5 TSF
14.5'	ML	30	SILT, ML: FIRM TO VERY STIFF; MOIST; LIGHT BROWN; 95% LOW PLASTICITY FINES; 5% FINE SAND; NO ODOR; CHUNKS OF CALICHE TO 1/2-INCH MAXIMUM SIZE; POCKET PENETROMETER: 1.5 TSF
17.0'			
	CL	16	LEAN CLAY, CL: STIFF; MOIST; MEDIUM-DARK BROWN; 90-95% MEDIUM PLASTICITY FINES; 5-10% FINE SAND; MODERATE CEMENTATION
		15	
21.0'		A	21.0 FEET, AS ABOVE EXCEPT HARD; STRONG CEMENTATION; POCKET PENETROMETER: 3.5 TSF
23.0'	ML	30	SILT, ML: VERY STIFF; MOIST; LIGHT GRAY; 95% LOW PLASTICITY FINES; 5% FINE SAND; POCKET PENETROMETER: 2.5 TSF
24.0'			

B.O.H

VERTICAL SCALE: 1" = 4'

GRAPHIC SCALE

2' 1' 0 2' 4' 6' 8'

US Army Corps of Engineers
Sacramento District

Symbol	Description	Date	Approved

Designed by: JOHN P. CHAMBERS
Dwn by: K. PHAN
Spec No.: 1304
Reviewed by:
Submitted by: Rev date: 14/12/2005
Code: Soil Des. Sec.
Date:
Rev:
Design file no:
Drawing Code:
File name: 229-25-539
Plot date: 14/12/2005
Dwg scale: AS NOTED

DEPARTMENT OF THE ARMY
CORPS OF ENGINEERS
SACRAMENTO, CALIFORNIA

SACRAMENTO DISTRICT
IN-HOUSE DESIGN
1325 "J" STREET
SACRAMENTO, CA 95814-2922

NELLIS AIR FORCE BASE NEVADA

F/A-22 ADD/ALTER WEAPONS SCHOOL
PN: RNMF063009

LOGS OF EXPLORATIONS
2F-05-01 To 2F-05-03

Sheet reference number:
B-102

Soil Design Section Sheet No.: 2 of 2

Reference – Exploration Log file no.: 229-01-558

Border: Revised 08/30/04, COESWD2.DWG

CIVIL ABBREVIATIONS

ABC -- AGGREGATE BASE COURSE
AC -- ASPHALT CONCRETE
ADJ -- ADJACENT
AFFF -- AQUEOUS FILM FORMING FOAM
AIP -- ABANDON IN PLACE
ALT -- ALTERNATE
APPROX -- APPROXIMATE
ASPH -- ASPHALT
ASTM -- AMERICAN SOCIETY FOR TESTING & MATERIALS

BC -- BACK OF CURB OR BEGINNING OF CURVE
BFP -- BACKFLOW PREVENTER
BITUM -- BITUMINOUS
BLDG -- BUILDING
BOR -- BUREAU OF RECLAMATION
BPRV -- BACKFLOW PREVENTER
BRG -- BEARING
BT -- BLACKTOP

C&G -- CURB & GUTTER
C&HW -- CHILLED & HOT WATER
CI -- CAST IRON
CJ -- CONSTRUCTION JOINT
CL -- CENTERLINE
CLR -- CLEARANCE
CMP -- CORRUGATED METAL PIPE
CMU -- CONCRETE MASONRY UNIT
CO -- CLEAN-OUT
COMP -- COMPACTION
CONC -- CONCRETE
CONST -- CONSTRUCTION
CONT -- CONTINUOUS
COORD -- COORDINATE
COTG -- CLEAN-OUT TO GRADE
CSG -- COMPACTED SUBGRADE
CTJ -- CONTRACTION JOINT
CU.FT. -- CUBIC FEET
CWB -- CAPILLARY WATER BARRIER
CWR -- CHILLED WATER RETURN
CWS -- CHILLED WATER SUPPLY

D -- DOWELED
DI -- DRAIN or DROP INLET
DIA -- DIAMETER
DIM -- DIMENSION

E -- EAST or EASTING or ELECTRICAL
EC -- END OF CURVE
EJ -- EXPANSION JOINT
EL -- ELEVATION
ELEC -- ELECTRICAL
ELEV -- ELEVATION
EXIST or (E) -- EXISTING
EXP -- EXPANSION

FAC -- FACILITY
FD -- FLOOR DRAIN
FED -- FEDERAL
FF -- FINISH FLOOR
FFW -- FRONT FACE OF WALL
FG -- FINISH GRADE
FH -- FIRE HYDRANT
FL -- FLOW LINE
FM -- FORCE MAIN
FT -- FEET or FOOT
FW -- FIRE WATER

G -- GAS
GA -- GAGE
GALV -- GALVANIZED
GFGI -- GOVERNMENT FURNISHED & GOVERNMENT INSTALLED
GV -- GATE VALVE

H -- HORIZONTAL
HORIZ -- HORIZONTAL
HT -- HEIGHT
HWR -- HOT WATER RETURN
HWS -- HOT WATER SUPPLY

ID -- INSIDE DIAMETER
IE -- INVERT ELEVATION
IN -- INCH
INV -- INVERT ELEVATION
IW -- INDUSTRIAL WASTE

JT -- JOINT

Kg -- KILOGRAM
KJ -- KEYED JOINT
kPa -- KILOPASCAL

L -- LENGTH or LEFT
LB -- POUNDS
LF -- LINEAR FEET

m -- METER
MAX -- MAXIMUM
MECH -- MECHANICAL
MH -- MANHOLE
MIN -- MINIMUM
mm -- MILLIMETER

N -- NEWTON or NORTH or NORTHING
NIC -- NOT IN CONTRACT
NO. -- NUMBER
NPW -- NON-POTABE WATER
NTS -- NOT TO SCALE

OC -- ON CENTER
OCEW -- ON CENTER EACH WAY
OD -- OUTSIDE DIAMETER
OHP -- OVERHEAD POWER
OS&Y -- OUTSIDE STEM & YOKE

P -- POWER LINE
PC -- POINT OF CONNECTION
PCC -- PORTLAND CEMENT CONCRETE
PFJ -- PERFORATED FELT JOINT
PI -- POINT OF INTERSECTION
PIV -- POST INDICATOR VALVE
PL -- PLATE
POC -- POINT OF CONTACT
POV -- PRIVATELY OWNED VEHICLE
PP -- POWER POLE
PRV -- PRESSURE REDUCING VALVE
PSI -- POUNDS PER SQ.IN.
PT -- POINT
PVC -- POLYVINYL CHLORIDE
PVMT -- PAVEMENT

R -- RADIUS or RIGHT
RD -- ROAD
REF -- REFERENCE
REINF -- REINFORCED
REQ'D -- REQUIRED
RR -- RAILROAD
RWD -- REDWOOD

S -- SLOPE or SOUTH
S&R -- SUPPLY & RETURN
SS OR S/S -- SANITARY SEWER
S4S -- SURFACE 4 SIDES
SD -- STORM DRAIN
SEC -- SECTION
SEJ -- SPECIAL EXPANSION JOINT
SHT -- SHEET
SJ -- SLIP JO?8??INT
SL -- SLOPE
SMS -- SELECT MATERIAL SUBBASE
SPA -- SPACES
SPECS -- SPECIFICATIONS
SQ.FT. -- SQUARE FEET
SS -- SANITARY SEWER
SSMH -- SANITARY SEWER MANHOLE
ST -- STREET
STA -- STATION
STD -- STANDARD
SW -- SIDEWALK or SOUTHWEST
SYM -- SYMMETRICAL

T -- TELEPHONE
TAN -- TANGENT
TC -- TOP OF CURB
TE -- THICKENED EDGE JOINT
TEB -- THICKENED EDGE AT BLDG.
TP -- TOP OF PAVEMENT
TR -- TOP OF RETAINING WALL
TRANS -- TRANSFORMER
TS -- TOP OF SAND
TW -- TOP OF WALL
TYP -- TYPICAL

U.O.N -- UNLESS OTHERWISE NOTED
UG -- UNDERGROUND

V -- VERTICAL
VCP -- VITRIFIED CLAY PIPE
VERT -- VERTICAL

W -- WATER, WEST or WIDTH
W/ -- WITH
W/O -- WITHOUT

& -- AND
@ -- AT
ø -- DIAMETER
-- NUMBER

NOTE:

THE CIVIL LEGEND AND ABBREVIATIONS SHOWN ON THIS SHEET ARE TYPICAL AND FOR INFORMATION ONLY. SOME ARE NOT APPLICABLE TO THE PROJECT DRAWINGS.

DETAIL ID

DETAIL NUMBER

SHEET # WHERE DETAIL IS TAKEN

SHEET # WHERE DETAIL IS DRAWN

NOTE:

1. DETAIL ID WITH "-" FOR "FROM" & "DRAWN" INDICATES THAT THE DETAIL IS TAKEN AND IS DRAWN ON THE SAME SHEET.

2. DETAIL ID WITH "TYP" IN "FROM" SPACE INDICATES THAT THE DETAIL IS A TYPICAL FOR ALL SIMILAR CONSTRUCTIONS THROUGHOUT THE PROJECT.

CIVIL LEGEND

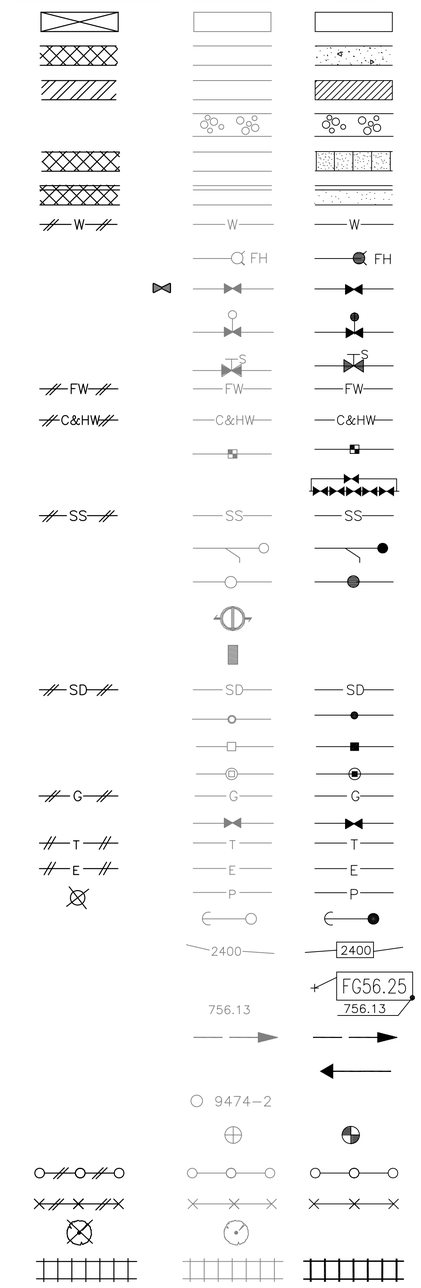

US Army Corps of Engineers
Sacramento District

Symbol	Description	Date	Approved

Designed by:
Dwn by:
Date: 10/21/05
Spec No.: 1304
Design file no: 229-25-539
Drawing Code:
Rev.
Reviewed by:
Submitted by: Civil, Civil Eng. Dwn. Sec. A.
File name: Civil Legend & Abbreviation.dwg
Plot date: 01/27/05, 10:45:3
Dwg. scale: AS_NOTED

DEPARTMENT OF THE ARMY
CORPS OF ENGINEERS
SACRAMENTO, CALIFORNIA

SACRAMENTO DISTRICT
IN-HOUSE DESIGN
1325 "J" STREET
SACRAMENTO, CA 95814-2922

NELLIS AFB NEVADA

F/A-22 ADD/ALTER WEAPONS SCHOOL

ABBREVIATIONS, LEGENDS AND NOTES

Sheet reference number:
C-001

Border Revised 08/20/04, CCSW0202.TMC Modified for Civil Eng. Dwn. Sec. A. 12/7/04

J:\Nellis\Adal Weapons Sch\cadd\civil\Civil Legend & Abbreviation.dwg, scale:As Noted, 01/27/05, 10:45:3, by:DS

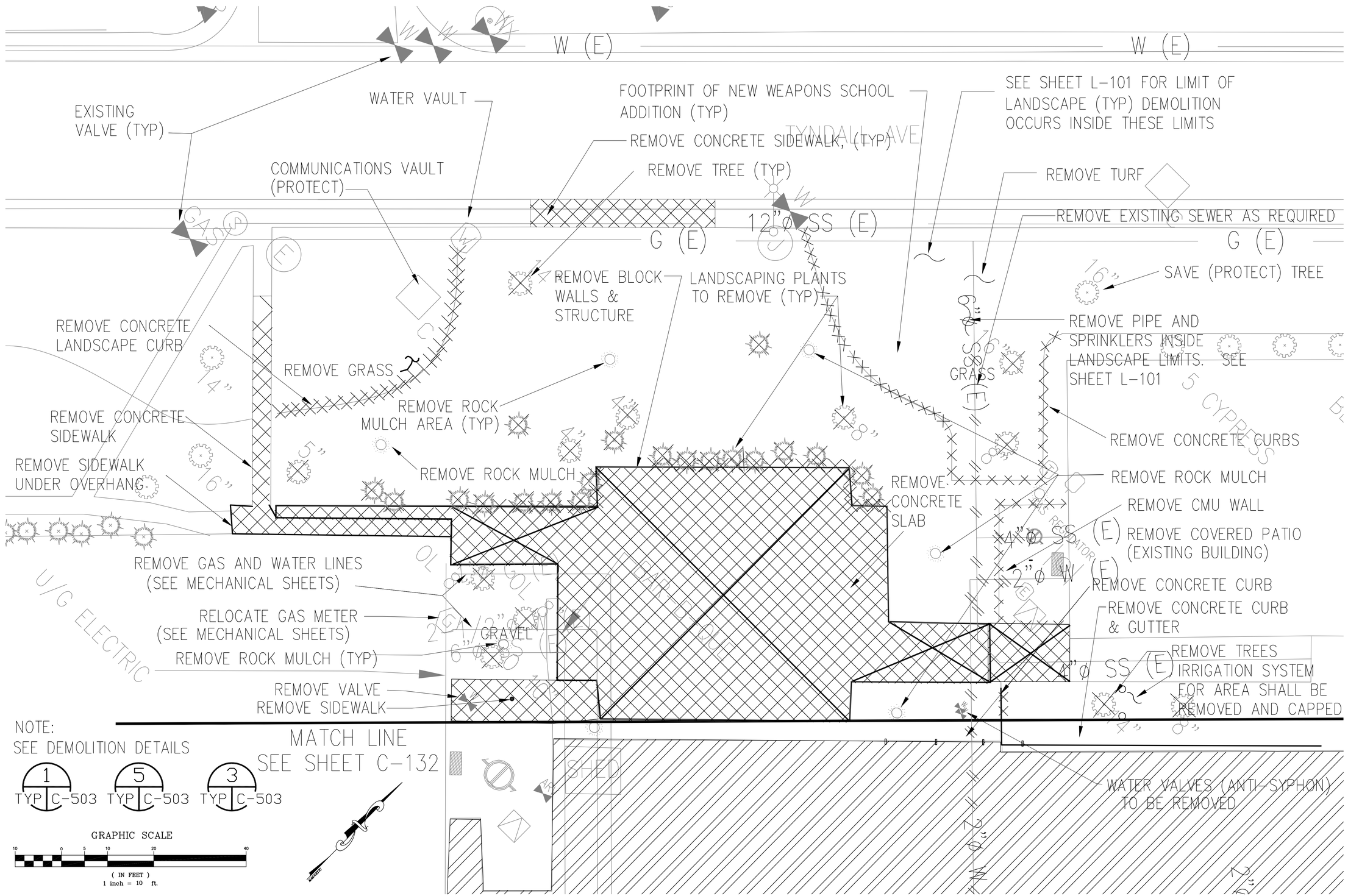

US Army Corps of Engineers
Sacramento District

Symbol	Description	Date	Approved

Designed by: R. SMITH
Dwn by: RS
Ckd by:
Spec No:
Reviewed by: PV
Submitted by:
Date:
Rev.
Design file no:
Drawing Code:
File name: N39C-131NEW.dwg
Plot date: Oct 20, 2005
Dwg scale: AS_NOTED
Chief, Civil Eng. Sec. A

DEMOLITION PLAN

Sheet reference number: C-131

J:\Nellis\Adal Weapons Sch\cadd\civil\N39C-131NEW.dwg Oct 20, 2005 - 4:41pm

UPDATE

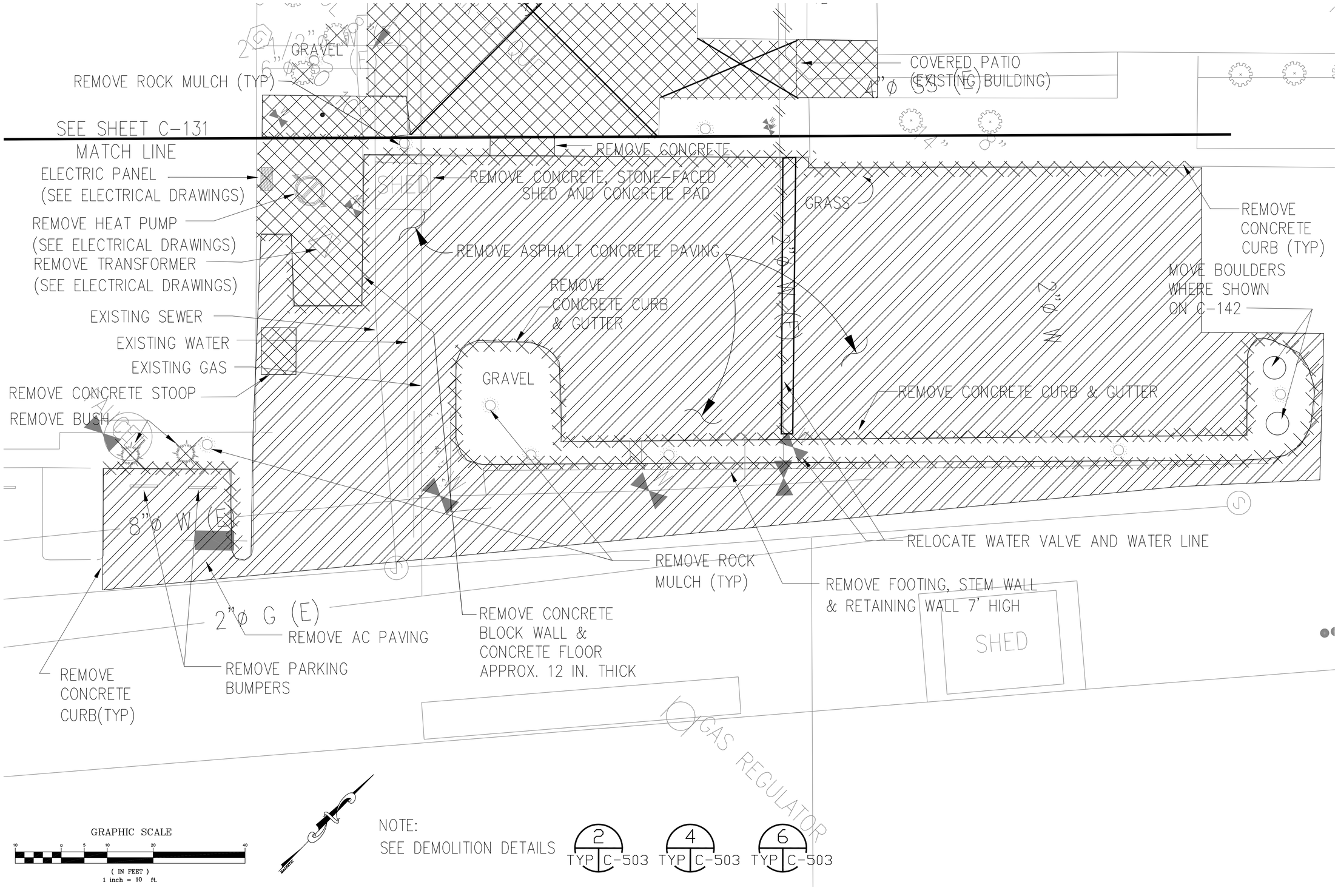

US Army Corps of Engineers
Sacramento District

Symbol	Description	Date	Approved

Designed by: R. SMITH
Dwn by: RS
Rev:
Date: 10/21/05
Spec No: 1304
Design File no: 229-25-539
Drawing Code:
Reviewed by: PV
Submitted by: /s/
Chief, Civil Eng. Sec. Sec. A
File name: N39C-132NEW.DWG
Plot date: Oct 20, 2005
Dwg scale: AS_NOTED

DEPARTMENT OF THE ARMY
CORPS OF ENGINEERS
SACRAMENTO, CALIFORNIA

SACRAMENTO DISTRICT
IN-HOUSE DESIGN
1325 J STREET
SACRAMENTO, CA 95814-2922

NEVADA
NELLIS AFB
F/A-22 ADD/ALTER WEAPONS SCHOOL
DEMOLITION PLAN

Sheet reference number:
C-132

Boundary Revised 03/01/04, CIDSMITB2.DWG

J:\Nellis\Adal Weapons Sch\cadd\civil\N39C-132NEW.DWG Oct 20, 2005 - 4:40pm

UPDATE

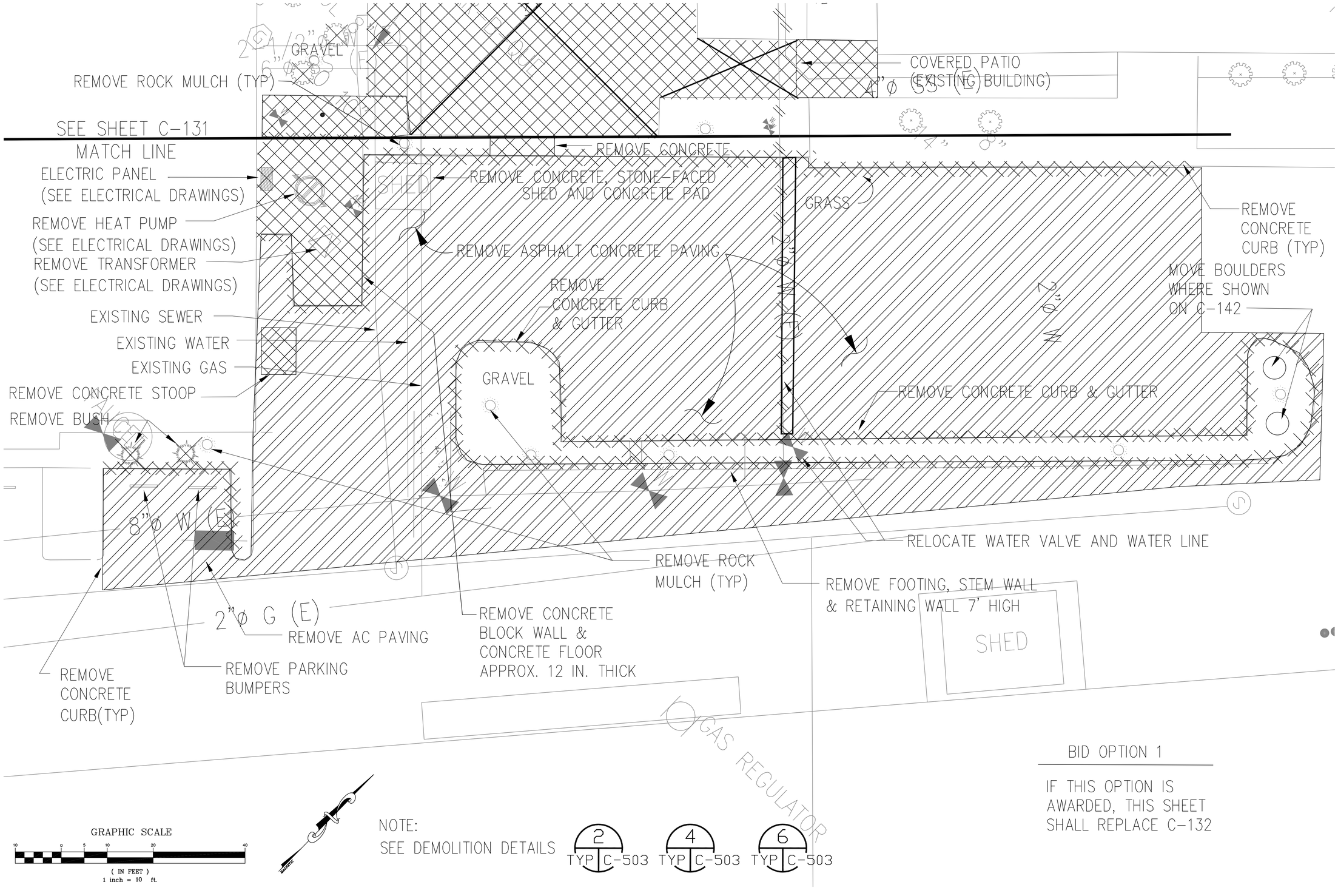

BID OPTION 1

IF THIS OPTION IS
AWARDED, THIS SHEET
SHALL REPLACE C-132

US Army Corps of Engineers
Sacramento District

Symbol	Description	Date	Approved

Date: 10/21/05
Rev.
Spec No: 1304
Design File no: 229-25-539
Drawing Code:
File name: N39C-133NEW.dwg
Plot date: Oct 20, 2005
Dwg scale: AS_NOTED
Designed by: R. SMITH
Dwn by: RS
Reviewed by: PV
Submitted by: /s/
Chief, Civil Eng. Sec. A

DEPARTMENT OF THE ARMY
CORPS OF ENGINEERS
SACRAMENTO, CALIFORNIA

SACRAMENTO DISTRICT
IN-HOUSE DESIGN
1325 J STREET
SACRAMENTO, CA 95814-2922

NEVADA
NELLIS AFB
F/A-22 ADD/ALTER WEAPONS SCHOOL

DEMOLITION PLAN
BID OPTION

Sheet reference number:
C-133

Border Revised 03/01/04, CEMVP02.DWG

J:\Nellis\Adal Weapons Sch\cadd\civil\N39C-133NEW.dwg Oct 20, 2005 - 4:38pm

UPDATE

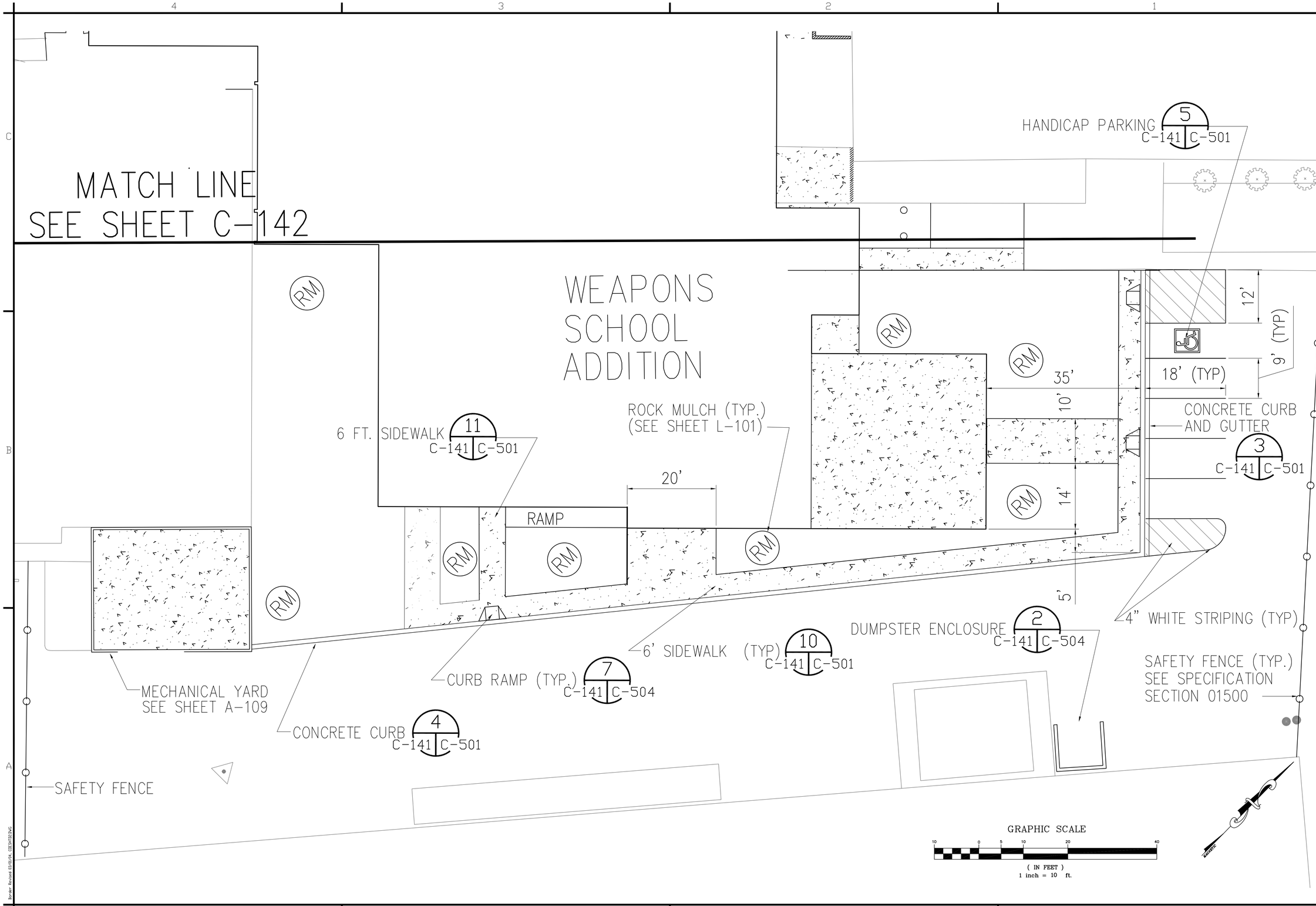

US Army Corps of Engineers
Sacramento District

Symbol	Description	Date	Approved

Designed by: R. SMITH
Dwn by: RS
Spec No: 1304
Reviewed by: PV
Submitted by: /s/ Chief, Civil Eng. Sec. A
Date: 10/21/05
Rev.
Design File no: 229-25-539
Drawing Code:
File name: N39C-141XXX.dwg
Plot date: Oct 20, 2005
Dwg scale: AS NOTED

DEPARTMENT OF THE ARMY
CORPS OF ENGINEERS
SACRAMENTO, CALIFORNIA

SACRAMENTO DISTRICT
IN-HOUSE DESIGN
1325 J STREET
SACRAMENTO, CA 95814-2922

NEVADA
NELLIS AFB
F/A-22 ADD/ALTER WEAPONS SCHOOL
SITE PLAN

Sheet reference number:
C-141

Border Revised 03/01/04, DESKTOP32.DWG

J:\Nellis\Adal Weapons Sch\cadd\civil\N39C-141XXX.dwg Oct 20, 2005 - 4:44pm

UPDATE

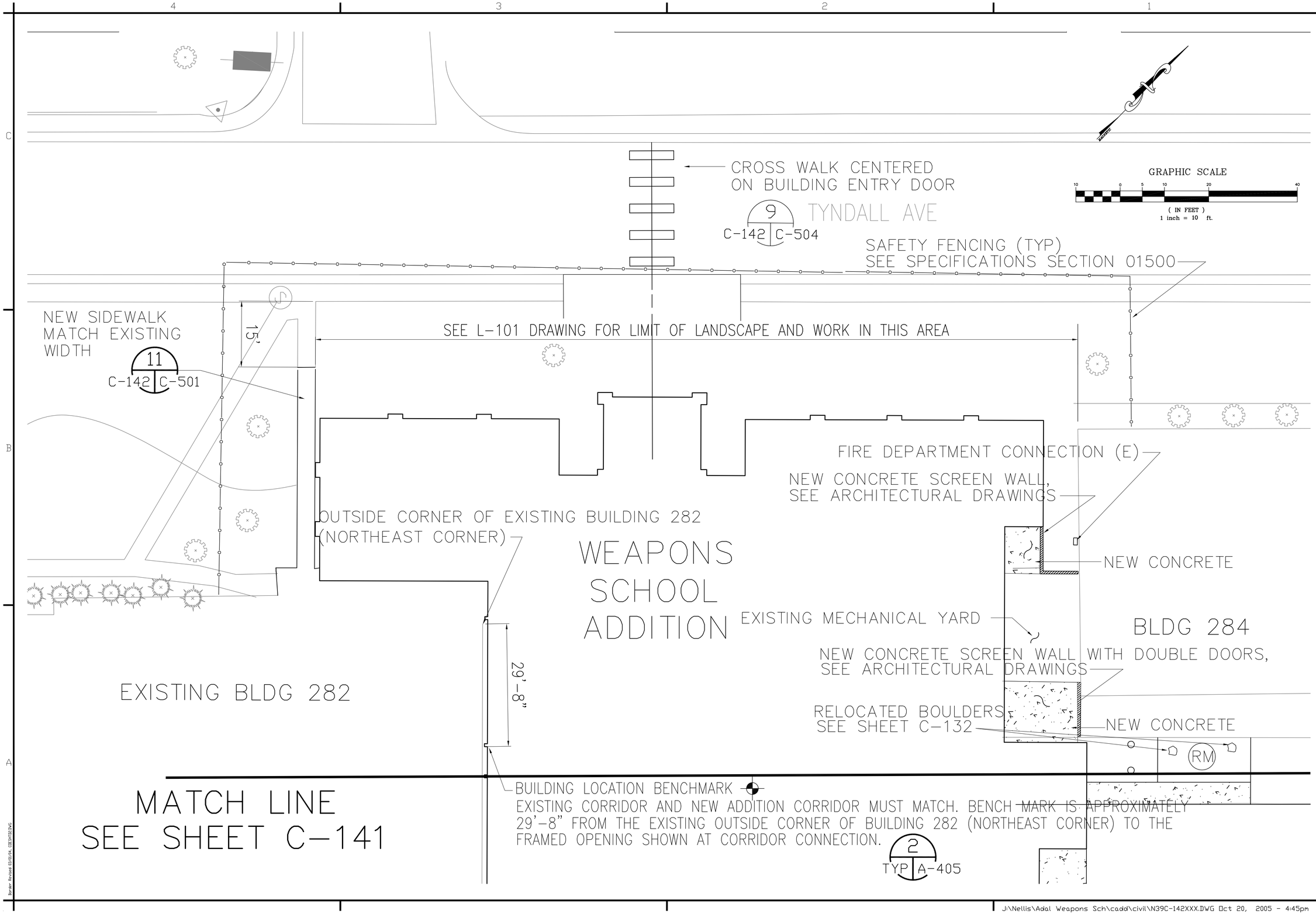

US Army Corps of Engineers
Sacramento District

Symbol	Description	Date	Approved

Date: 10/21/05
Rev.
Spec No: 1304
Design File no: 229-25-539
Drawing Code:
File name: N39C-142XXX.DWG
Plot date: Oct 20, 2005
Dwg scale: AS_NOTED
Designed by: R. SMITH
Dwn by: RS
Reviewed by: PV
Submitted by: /s/ Chief, Civil Eng. Sec. A

DEPARTMENT OF THE ARMY
CORPS OF ENGINEERS
SACRAMENTO, CALIFORNIA

SACRAMENTO DISTRICT
IN-HOUSE DESIGN
1325 J STREET
SACRAMENTO, CA 95814-2922

NEVADA
NELLIS AFB
F/A-22 ADD/ALTER WEAPONS SCHOOL
SITE PLAN

Sheet reference number:
C-142

Border Revised 03/01/04, CDESNT02.DWG

J:\Nellis\Add Weapons Sch\cadd\civil\N39C-142XXX.DWG Oct 20, 2005 - 4:45pm

UPDATE

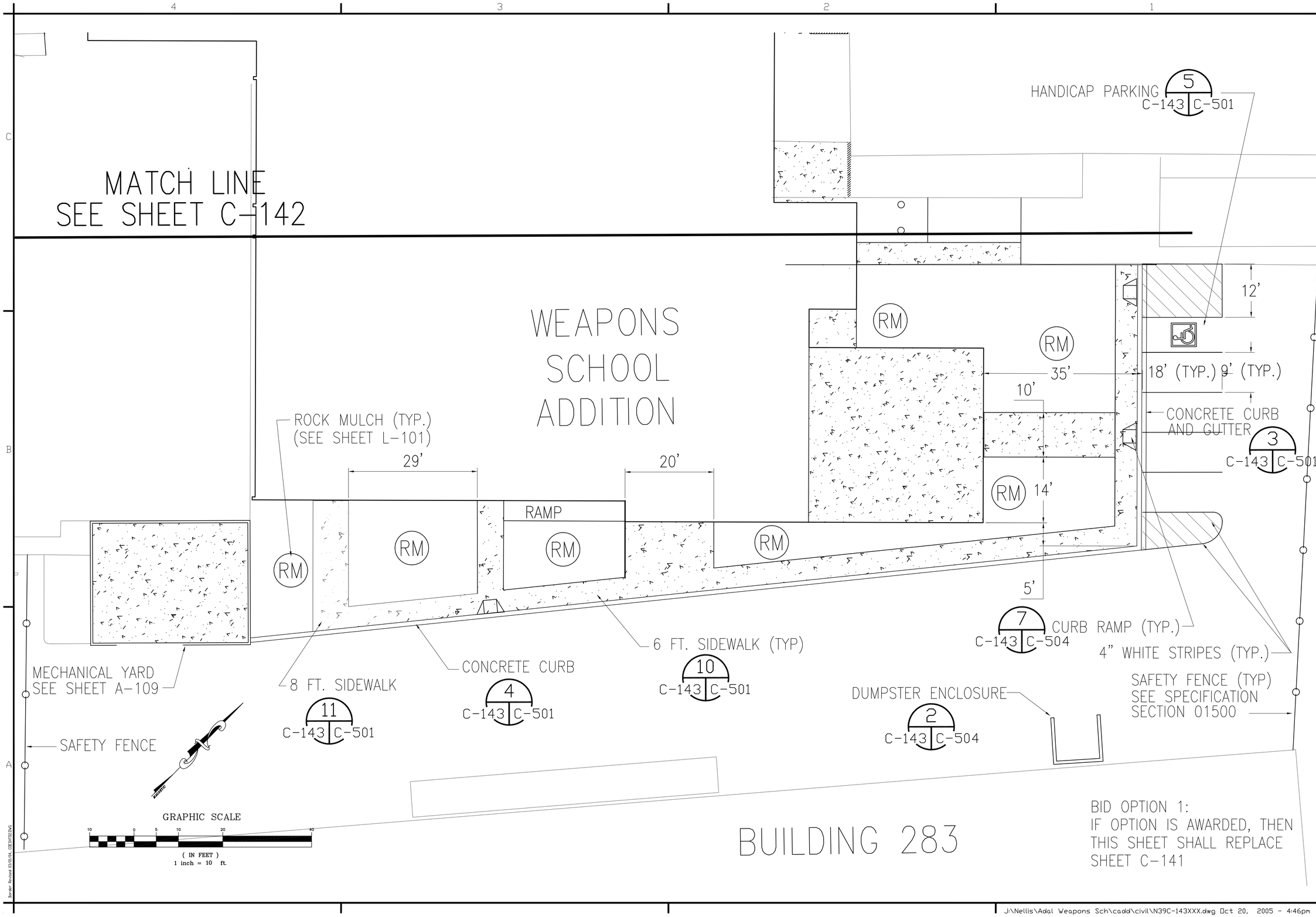

US Army Corps of Engineers
Sacramento District

Symbol	Description	Date	Approved

Designed by: R. SMITH
Dwn by: RS
Spec No: 1304
Reviewed by: PV
Submitted by: /S/
Chief, Civil Eng. Sec. A
Date: 10/21/05
Rev:
Design File no: 229-25-539
Drawing Code:
File name: N39C-143XXX.dwg
Plot date: Oct 20, 2005
Dwg scale: AS_NOTED

DEPARTMENT OF THE ARMY
CORPS OF ENGINEERS
SACRAMENTO, CALIFORNIA

SACRAMENTO DISTRICT
IN-HOUSE DESIGN
1325 J STREET
SACRAMENTO, CA 95814-2922

NEVADA
NELLIS AFB
F/A-22 ADD/ALTER WEAPONS SCHOOL

SITE PLAN
BID OPTION

Sheet reference number:
C-143

Border: Revised 03/01/04, CEMP-TD-ZVG

J:\Nellis\Adal Weapons Sch\cadd\civil\N39C-143XXX.dwg Oct 20, 2005 - 4:46pm

UPDATE

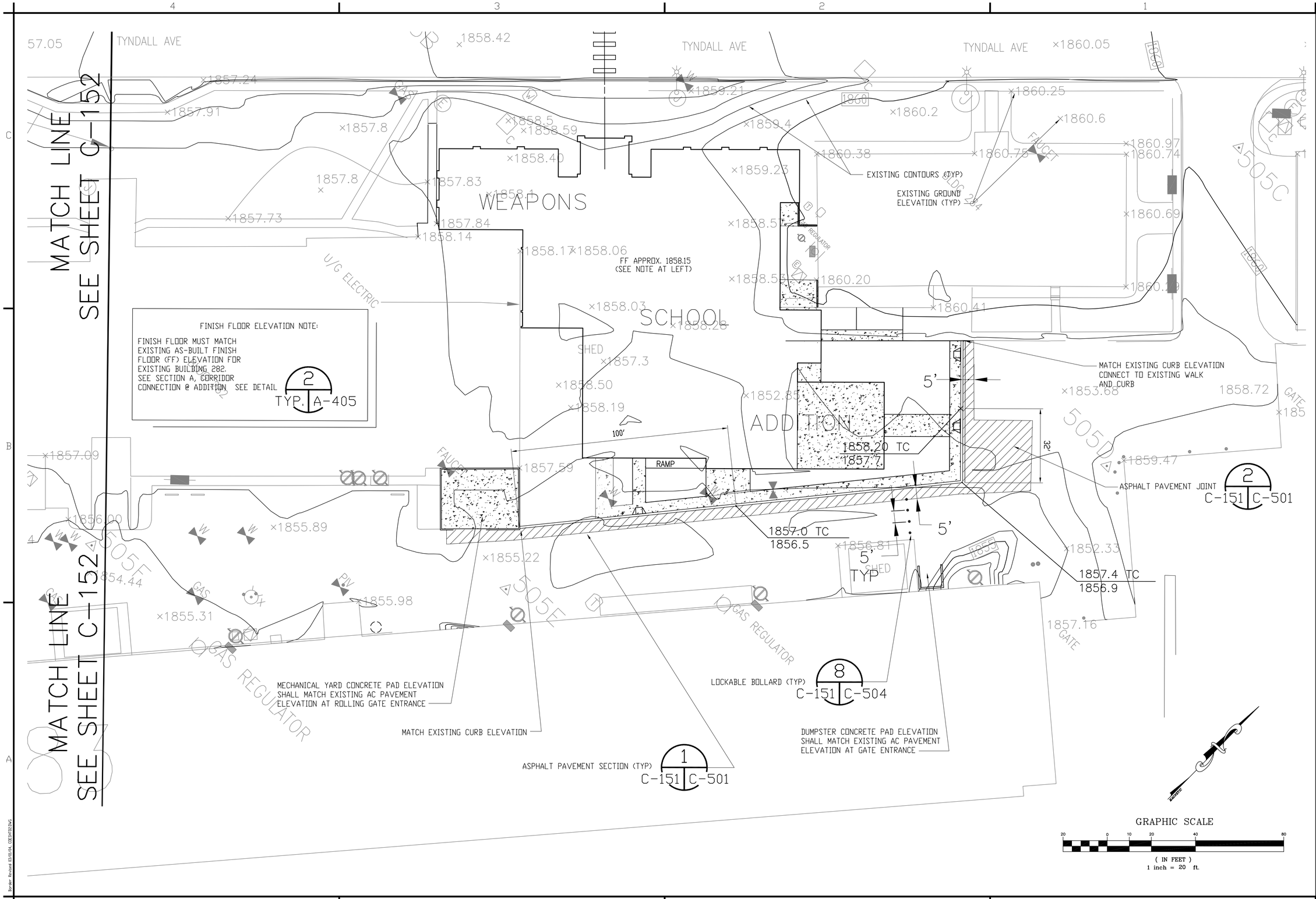

US Army Corps of Engineers
Sacramento District

Symbol	Description	Date	Approved

Designed by: R. SMITH
Dwn by: RS
Spec No: 1304
Reviewed by: PV
Submitted by: JV
Date: 10/21/05
Design File no: 229-25-539
Drawing Code:
Rev.
File name: N39C-151NEW.dwg
Plot date: Oct 20, 2005
Dwg scale: AS_NOTED

DEPARTMENT OF THE ARMY
CORPS OF ENGINEERS
SACRAMENTO, CALIFORNIA

SACRAMENTO DISTRICT
IN-HOUSE DESIGN
1325 J STREET
SACRAMENTO, CA 95814-2922

NEVADA

NELLIS AFB

F/A-22 ADD/ALTER WEAPONS SCHOOL

PAVING & GRADING PLAN

Sheet reference number:
C-151

UPDATE

J:\Nellis\Adal Weapons Sch\cadd\civil\N39C-151NEW.dwg Oct 20, 2005 - 4:52pm

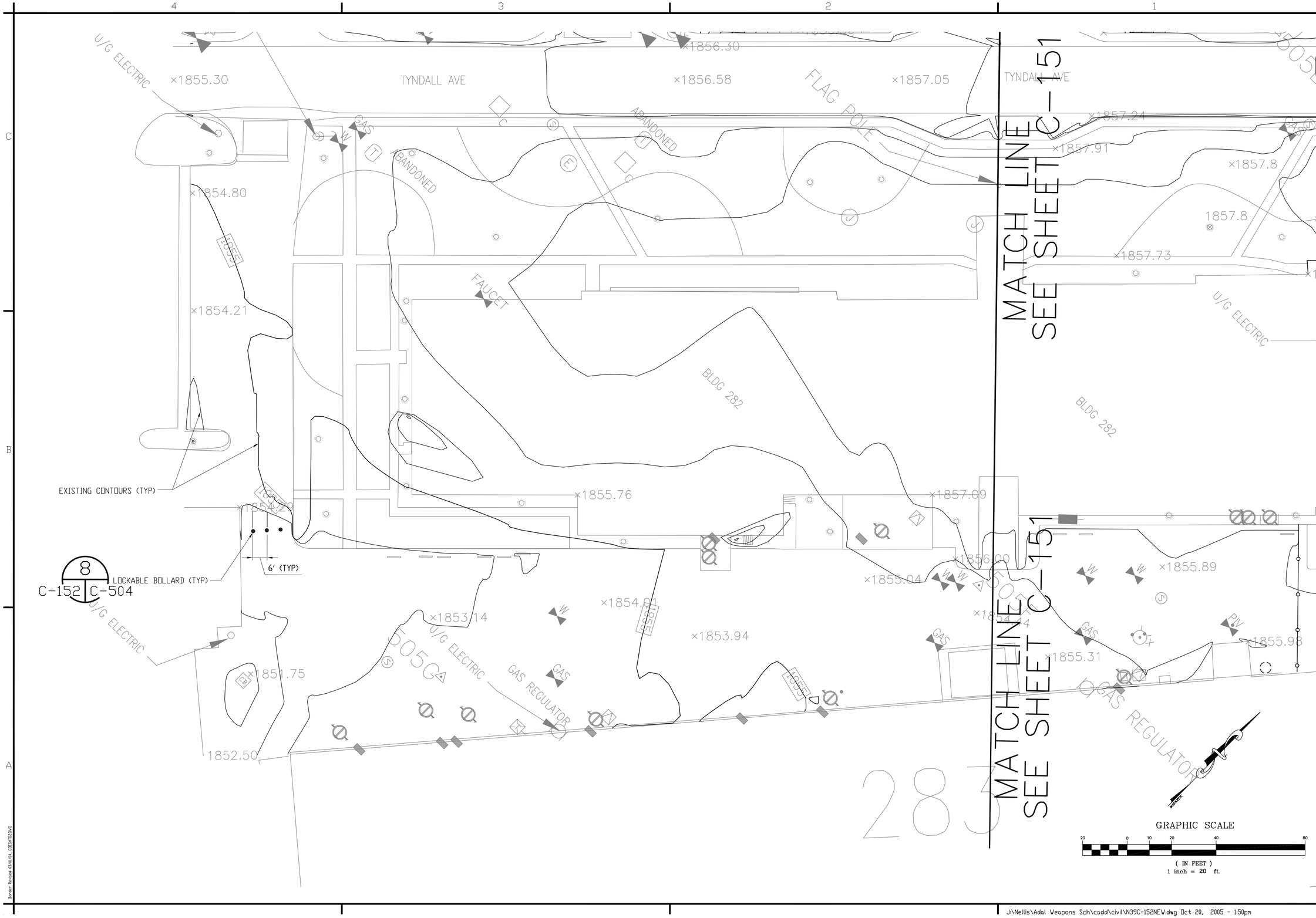

US Army Corps of Engineers
Sacramento District

Symbol	Description	Date	Approved

Designed by: R. SMITH
Dwn by: RS
Spec No: 1304
Reviewed by: PV
Submitted by: /S/
Date: 10/21/05
Rev.
Design File no: 229-25-539
Drawing Code:
File name: N39C-152NEW.dwg
Plot date: Oct 20, 2005
Dwg scale: AS_NOTED
Chief, Civil Eng. Sec. A

DEPARTMENT OF THE ARMY
CORPS OF ENGINEERS
SACRAMENTO, CALIFORNIA

SACRAMENTO DISTRICT
IN-HOUSE DESIGN
1325 J STREET
SACRAMENTO, CA 95814-2922

NEVADA

NELLIS AFB

F/A-22 ADD/ALTER WEAPONS SCHOOL

PAVING & GRADING PLAN

Sheet reference number:
C-152

Border: Revised 03/18/04, CEIS/ITD/ZVG

J:\Nellis\Adal Weapons Sch\cadd\civil\N39C-152NEW.dwg Oct 20, 2005 - 1:50pm

UPDATE

MATCH LINE
SEE SHEET C-152

TYNDALL AVE

WEAPONS SCHOOL ADDITION

FF APPROX. 1858.15
(SEE NOTE AT LEFT)

EXISTING CONTOURS (TYP)

EXISTING GROUND ELEVATION (TYP)

BLDG 284

BLDG 282

SHED

U/G ELECTRIC

FINISH FLOOR ELEVATION NOTE:

FINISH FLOOR MUST MATCH EXISTING AS-BUILT FINISH FLOOR (FF) ELEVATION FOR EXISTING BUILDING 282. SEE SECTION A, CORRIDOR CONNECTION @ ADDITION SEE DETAIL 2 / A-405 (TYP)

MATCH EXISTING CURB ELEVATION

5'

32'

100'

RAMP

1858.20 TC
1857.7

1857.0 TC
1856.5

1857.4 TC
1856.9

5' TYP

ASPHALT PAVEMENT JOINT, TYP 2 / C-153 C-501

LOCKABLE BOLLARD, TYP 8 / C-153 C-504

DUMPSTER CONCRETE PAD ELEVATION SHALL MATCH EXISTING AC PAVEMENT ELEVATION AT GATE ENTRANCE

MECHANICAL YARD CONCRETE PAD ELEVATION SHALL MATCH EXISTING AC PAVEMENT ELEVATION AT ROLLING GATE ENTRANCE

MATCH EXISTING CURB ELEVATION

ASPHALT PAVEMENT SECTION (TYP) 1 / C-153 C-501

GAS REGULATOR

FAUCET

GATE

505C

505E

GRAPHIC SCALE

20 0 10 20 40 80

(IN FEET)
1 inch = 20 ft.

BID OPTION 1

IF THIS OPTION IS AWARDED
THIS SHEET SHALL REPLACE C-151.

US Army Corps of Engineers
Sacramento District

Symbol	Description	Date	Approved

Designed by: R. SMITH
Date: 10/21/05
Rev.
Dwn by: RS
Spec. No: 1304
Design File no: 229-25-539
Drawing Code:
Reviewed by: PV
Submitted by: /s/
File name: N39C-153NEW.dwg
Plot date: Oct 20, 2005
Dwg scale: AS_NOTED
CHief, Dwl Drg Sec. Sec A

DEPARTMENT OF THE ARMY
CORPS OF ENGINEERS
SACRAMENTO, CALIFORNIA

SACRAMENTO DISTRICT
IN-HOUSE DESIGN
1325 J STREET
SACRAMENTO, CA 95814-2922

NEVADA

NELLIS AFB

F/A-22 ADD/ALTER WEAPONS SCHOOL

PAVING & GRADING PLAN
BID OPTION

Sheet reference number:
C-153

J:\Nellis\Adal Weapons Sch\cadd\civil\N39C-153NEW.dwg Oct 20, 2005 - 4:55pm

UPDATE

Border Revised 03/11/04, CEBORTER.DWG

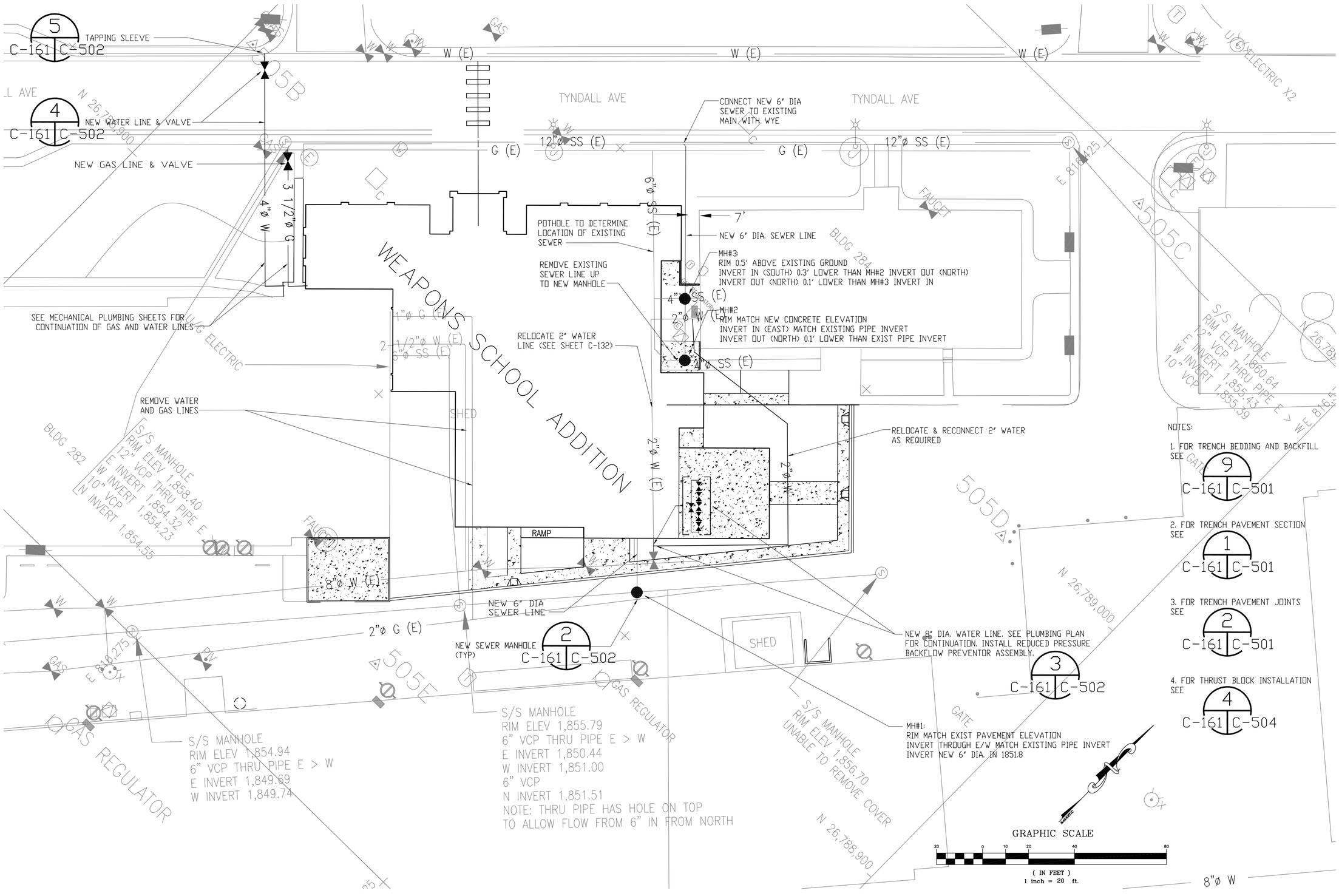

NOTES:

1. FOR TRENCH BEDDING AND BACKFILL SEE 9 / C-161 C-501
2. FOR TRENCH PAVEMENT SECTION SEE 1 / C-161 C-501
3. FOR TRENCH PAVEMENT JOINTS SEE 2 / C-161 C-501
4. FOR THRUST BLOCK INSTALLATION SEE 4 / C-161 C-504

US Army Corps of Engineers
Sacramento District

Symbol	Description	Date	Approved

Date: 10/21/05 | Rev.
Design File no: 229-25-539
Drawing Code:
Spec No: 1304
File name: N39C-161XXX.dwg
Plot date: Oct 20, 2005
Dwg scale: AS_NOTED

Designed by: R. SMITH
Dwn by: RS
Reviewed by: RV
Submitted by: /s/ Chief, Civil Eng. Sec. A

DEPARTMENT OF THE ARMY
CORPS OF ENGINEERS
SACRAMENTO, CALIFORNIA

SACRAMENTO DISTRICT
IN-HOUSE DESIGN
1325 J STREET
SACRAMENTO, CA 95814-2922

NEVADA
NELLIS AFB
F/A-22 ADD/ALTER WEAPONS SCHOOL
UTILITY PLAN

Sheet reference number:
C-161

Border Revised 03/01/04, DESIGT03.DWG

J:\Nellis\Adal Weapons Sch\cadd\civil\N39C-161XXX.dwg Oct 20, 2005 - 5:05pm

UPDATE

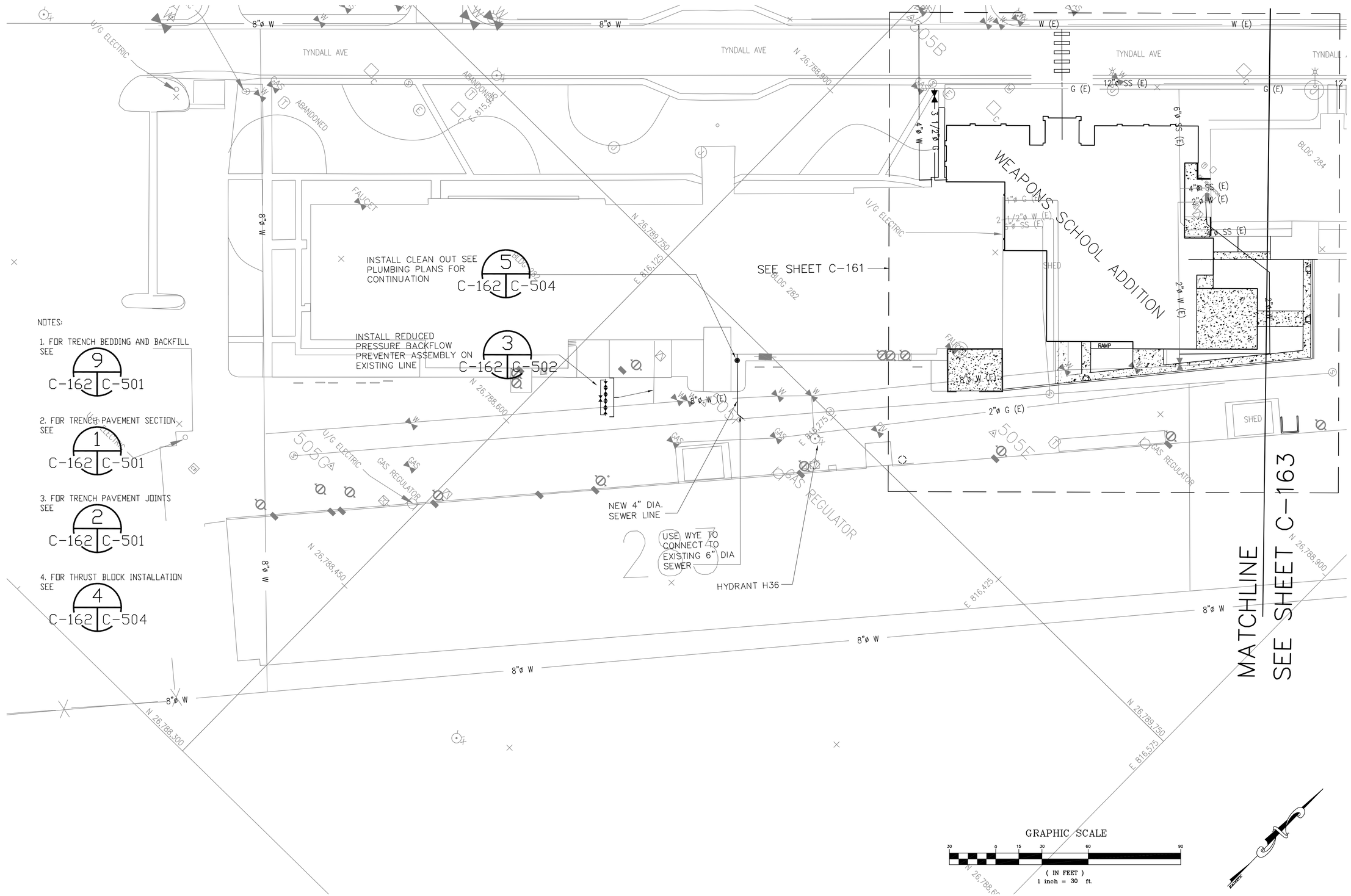

NOTES:

1. FOR TRENCH BEDDING AND BACKFILL SEE 9 C-162 C-501

2. FOR TRENCH PAVEMENT SECTION SEE 1 C-162 C-501

3. FOR TRENCH PAVEMENT JOINTS SEE 2 C-162 C-501

4. FOR THRUST BLOCK INSTALLATION SEE 4 C-162 C-504

US Army Corps of Engineers
Sacramento District

Symbol	Description	Date	Approved

Designed by: R. SMITH
Drawn by: RS
Spec No: 1304
Reviewed by: PV
Submitted by: /s/
Chief, Civil Eng. Sec. A
Date: 10/21/05
Rev:
Design File no: 229-25-539
Drawing Code:
File name: N39C-162XXX.dwg
Plot date: Oct 20, 2005
Dwg scale: AS_NOTED

DEPARTMENT OF THE ARMY
CORPS OF ENGINEERS
SACRAMENTO, CALIFORNIA

SACRAMENTO DISTRICT
IN-HOUSE DESIGN
1325 J STREET
SACRAMENTO, CA 95814-2922

NEVADA

NELLIS AFB

F/A-22 ADD/ALTER WEAPONS SCHOOL

UTILITY PLAN
EXISTING WATER, 4 INCH SEWER & HYDRANT H36

Sheet reference number:
C-162

Border: Revised 03/01/04, CEIS01B2.DWG

J:\Nellis\Adal Weapons Sch\cadd\civil\N39C-162XXX.dwg Oct 20, 2005 - 5:07pm

UPDATE

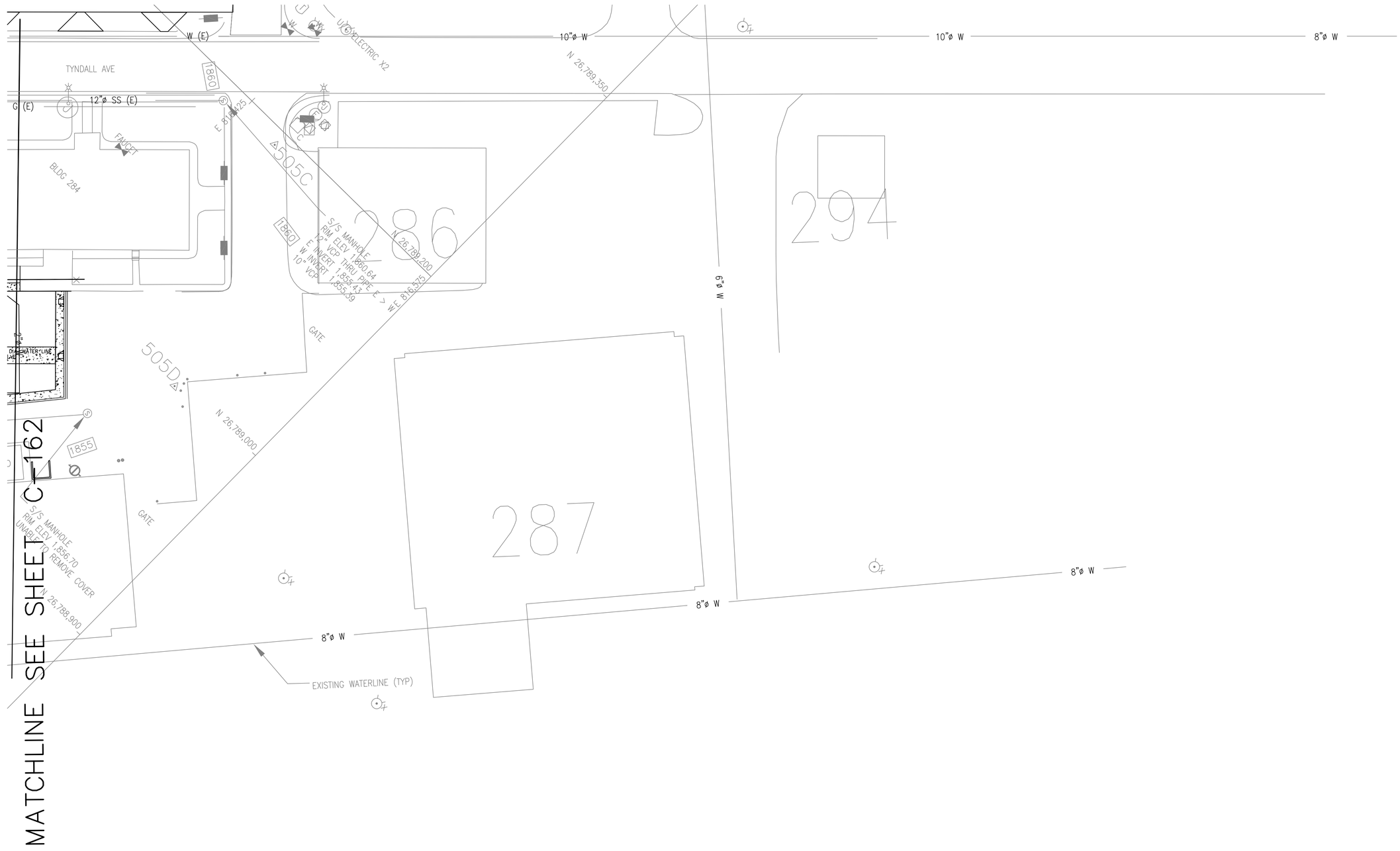

GRAPHIC SCALE

30 0 15 30 60 120

(IN FEET)
1 inch = 30 ft.

US Army Corps of Engineers
Sacramento District

Symbol	Description	Date	Approved

Designed by: R. SMITH
Dwn by: RS
Spec No: 1304
Reviewed by: RV
Submitted by: Chief, Civil Eng. Des. Sec. A

Date: 10/21/05
Rev.
Design File no: 229-25-539
Drawing Code:
File name: N39C-163NEW.dwg
Plot date: Oct 20, 2005
Dwg scale: AS_NOTED

DEPARTMENT OF THE ARMY
CORPS OF ENGINEERS
SACRAMENTO, CALIFORNIA

SACRAMENTO DISTRICT
IN-HOUSE DESIGN
1325 J STREET
SACRAMENTO, CA 95814-2922

NEVADA
NELLIS AFB
F/A-22 ADD/ALTER WEAPONS SCHOOL

UTILITY PLAN
EXISTING WATER

Sheet reference number:
C-163

Border Revised 03/01/04, DESIGN123.NVG

J:\Nellis\Adal Weapons Sch\cadd\civil\N39C-163NEW.dwg Oct 20, 2005 - 5:00pm

UPDATE

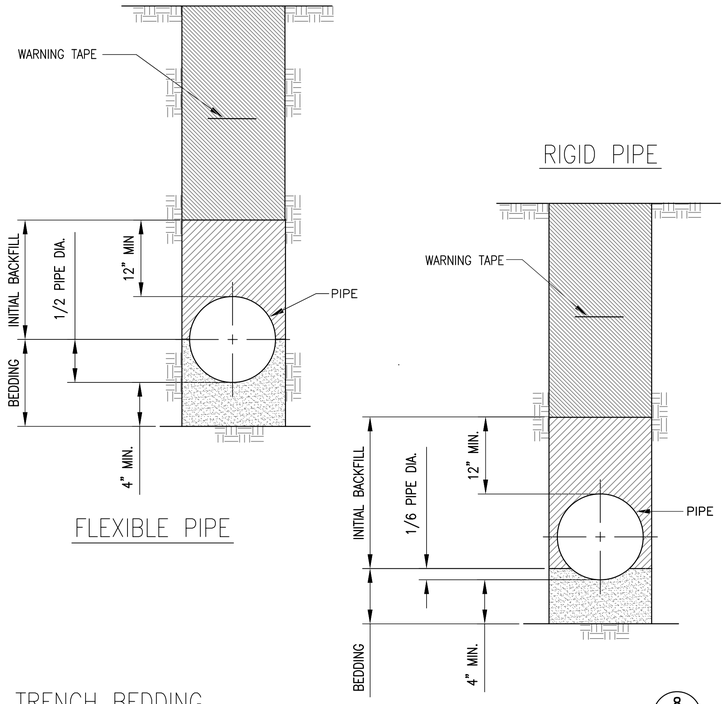

TRENCH BEDDING

SCALE: NONE

8 C-161, C-162 | C-501

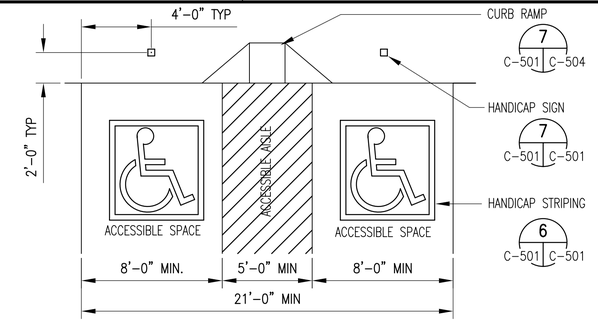

HANDICAP PARKING DETAIL

SCALE: NONE

5 C-141, C-143 | C-501

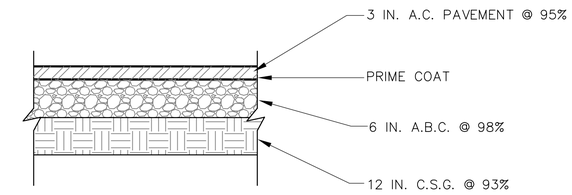

TYPICAL ASPHALT PAVEMENT SECTION

SCALE: NONE

1 C-151, C-153, C-161, C-162, C-501 | C-501

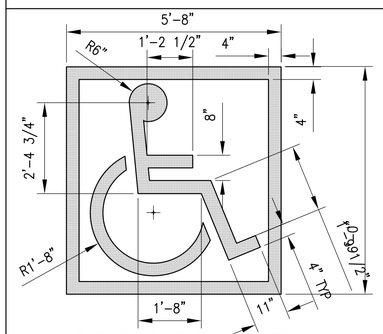

NOTES:

1. HANDICAP SYMBOL AND BORDER: COLOR: WHITE FED. STD. NO. 17875
2. BACKGROUND: COLOR: INTERNATIONAL BLUE FED. STD. NO. 15180

HANDICAP STRIPING DETAIL

SCALE: NONE

6 C-501 | C-501

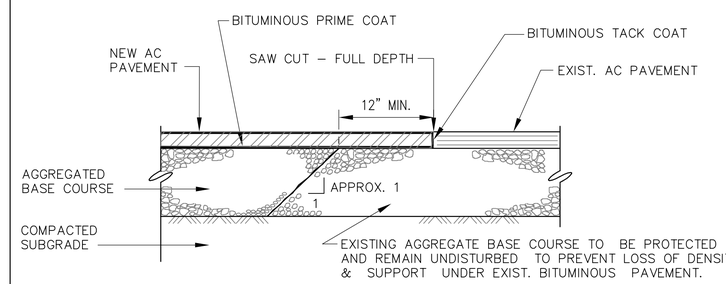

ASPHALT PAVEMENT JOINT DETAIL

SCALE: N.T.S.

2 C-151, C-153, C-161, C-162 | C-501

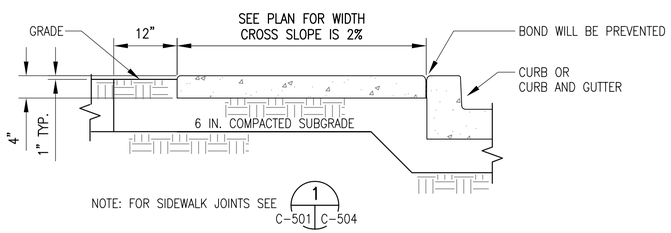

STREET SIDEWALK SECTION– TYPICAL

SCALE: NONE

10 C-141, C-143 | C-501

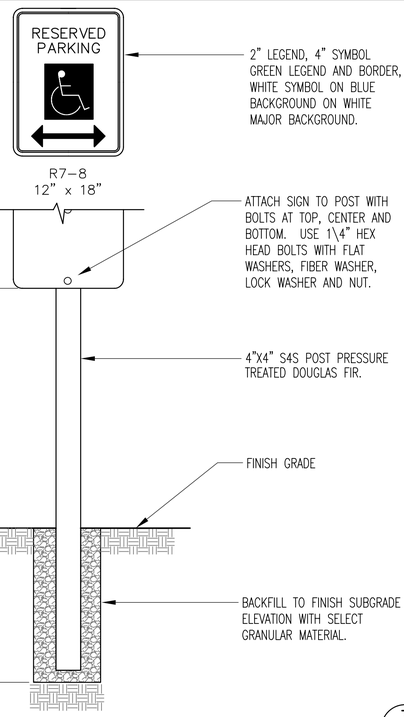

HANDICAP SIGN

SCALE: NONE

7 C-501 | C-501

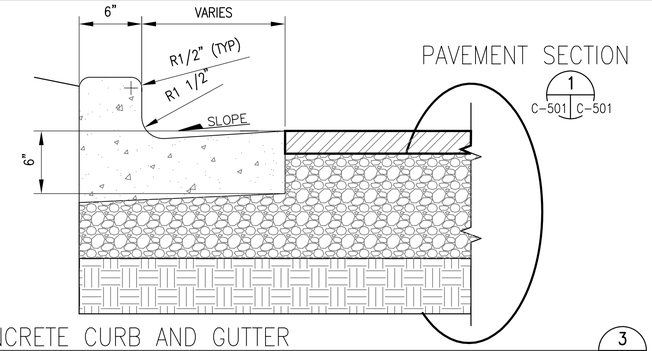

CONCRETE CURB AND GUTTER

SCALE: NONE

3 C-141, C-142, C-143 | C-501

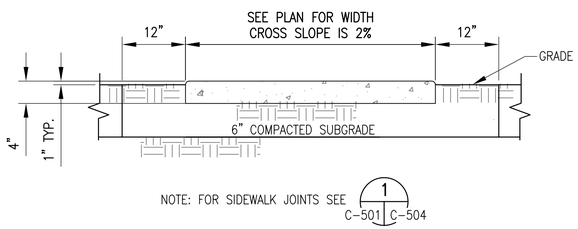

SIDEWALK SECTION– TYPICAL

SCALE: NONE

11 C-141, C-142, C-143 | C-501

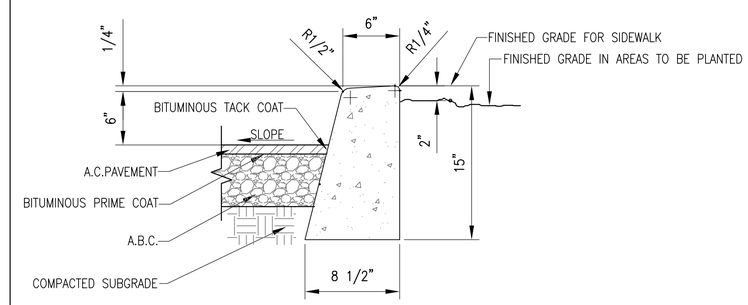

TYPICAL CONCRETE CURB DETAIL

SCALE: NONE

4 C-141, C-142, C-143 | C-501

US Army Corps of Engineers
Sacramento District

Symbol	Description	Date	Approved

Rev.

Date: 10/21/05
Spec No.: 1304
Designed by:
Dwn by: Design file no: 229-25-539
Reviewed by:
Drawing Code:
Submitted by:
File name: Civil Legend & Abbreviation.dwg
Plot date: 01/27/05, 10:45:3
Dwg scale: AS NOTED
Civil, Civil Eng Tmp Sec A

DEPARTMENT OF THE ARMY
CORPS OF ENGINEERS
SACRAMENTO, CALIFORNIA

SACRAMENTO DISTRICT
IN-HOUSE DESIGN
1325 "J" STREET
SACRAMENTO, CA 95814-2922

NEVADA

F/A-22 ADD/ALTER WEAPONS SCHOOL

SITE DETAILS

NELLIS AFB

Sheet reference number:
C-501

Border Revised 08/20/04, CORSMTD2.DWG (Modified for Civil Eng Tmp Sec A, 12/7/04)

J:\Nellis\Adal Weapons Sch\cadd\civil\Civil Legend & Abbreviation.dwg, scale:As Noted, 01/27/05, 10:45:3, by:DS

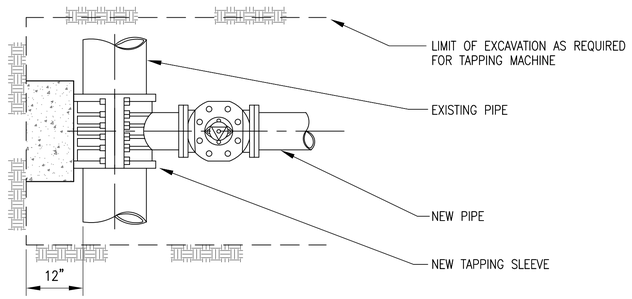

PLAN

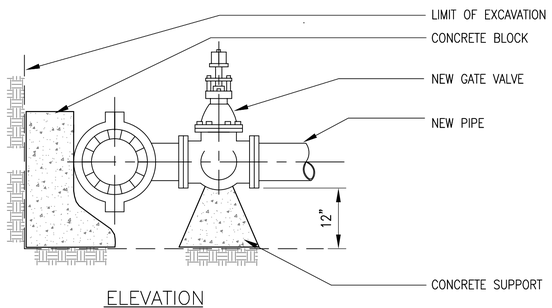

ELEVATION

TAPPING SLEEVE AND VALVE INSTALLATION DETAIL

SCALE: NONE

5 C-161 | C-502

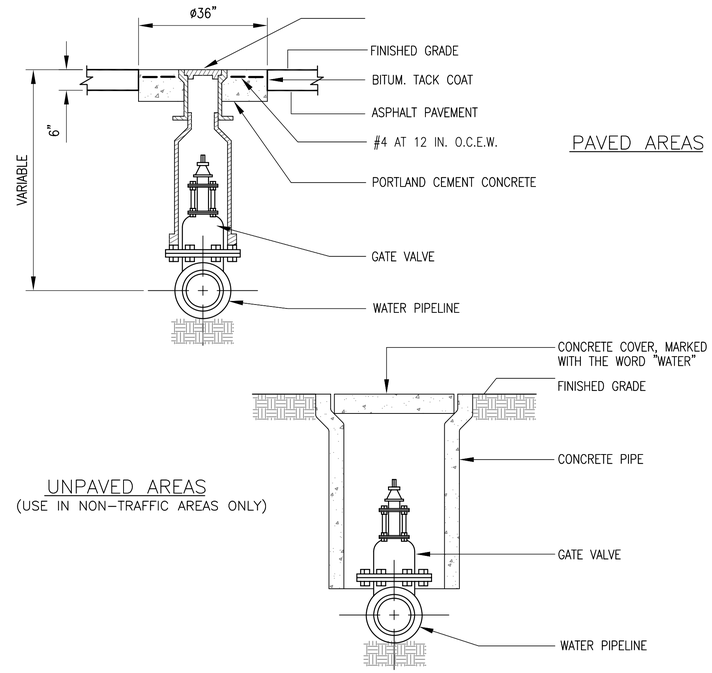

PAVED AREAS

UNPAVED AREAS
(USE IN NON-TRAFFIC AREAS ONLY)

GATE VALVE WITH BOX, TYPICAL

SCALE: NONE

4 C-161 | C-502

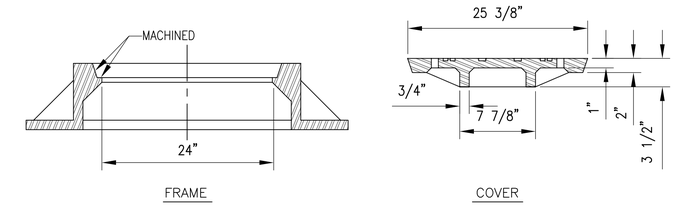

TYPICAL MANHOLE COVER AND FRAME DETAIL

SCALE: NONE

1 C-502 | C-502

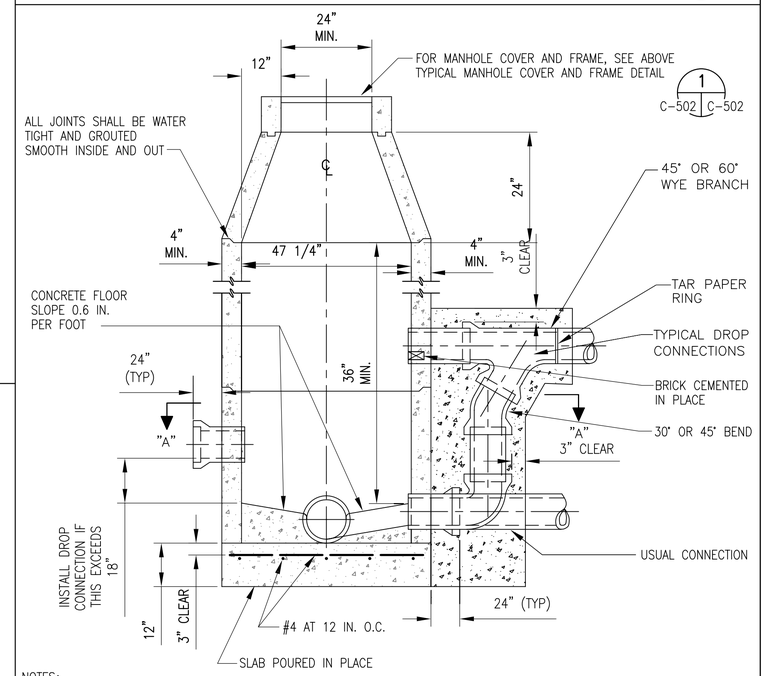

NOTES:

1) CAST IN PLACE CONCRETE MANHOLES SHALL HAVE A MINIMUM WALL THICKNESS OF 8 IN. REINFORCED WITH #4 BARS @ 12 IN. O.C.E.W. AT CENTER OF WALL. FOUNDATION AND FLOOR DETAILS SHALL BE THE SAME AS FOR PRECAST MANHOLES.

2) PROVIDE JOINT WITHIN 24 IN. OF MANHOLE WALL AT EACH PIPE.

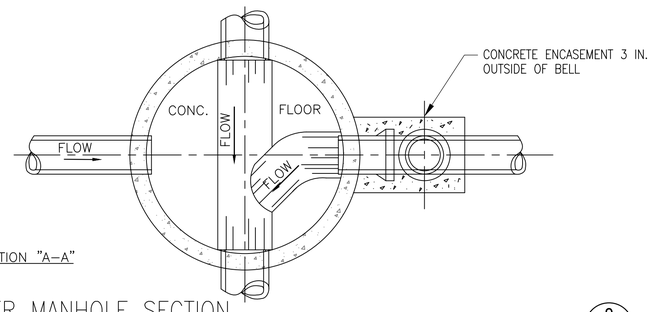

SECTION "A-A"

SEWER MANHOLE SECTION

SCALE: NONE

2 C-161 | C-502

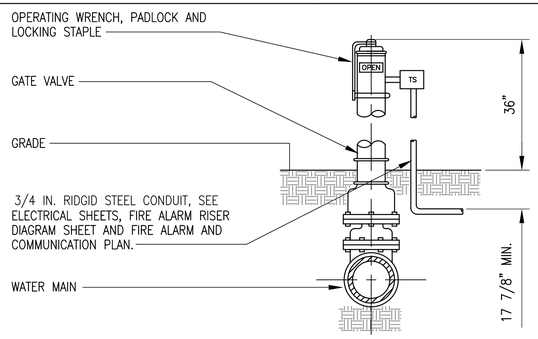

GATE VALVE WITH POST INDICATOR VALVE

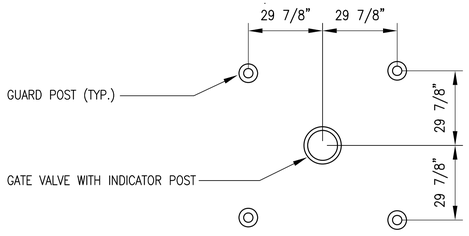

GUARD POST LOCATION

GATE VALVE WITH POST INDICATOR VALVE AND GUARD POST LOCATIONS

SCALE: NONE

6 C-161 | C-502

NOTES

1) STEEL PIPE, SIZE AND LENGTH AS REQUIRED. 4-INCH AND LARGER, USE FLANGED FITTINGS. 3-INCH AND SMALLER, USE THREADED FITTINGS.

2) 4-INCH AND LARGER, USE FLANGED COUPLING ADAPTER W/ RESTRAINT. 3-INCH AND SMALLER, USE UNION JOINT.

3) FOR FIRE WATER LINE, LOCK GATE VALVE OPEN W/ CHAIN AND PADLOCK.

4) PROVIDE GUARDPOSTS AROUND PORTLAND CEMENT CONCRETE PAD.

5) PROVIDE "REDUCED PRESSURE" BACKFLOW PREVENTER FOR DOMESTIC WATER.

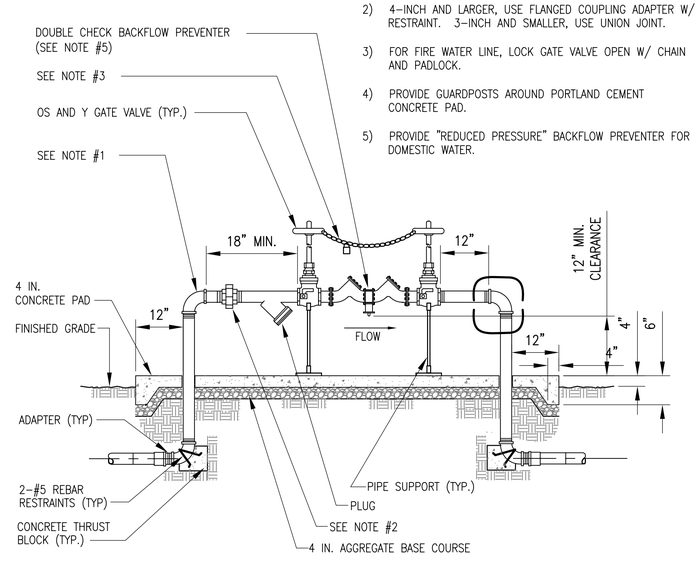

REDUCED PRESSURE BACKFLOW PREVENTER

SCALE: NONE

3 C-161, C-162 | C-502

US Army Corps of Engineers
Sacramento District

Symbol	Description	Date	Approved

Designed by:
Date: 10/21/05
Dwn by: Spec No.: 1304
Reviewed by: Design file no: 229-25-539
Drawing Code:
Submitted by: Chief, Civil Eng Des Sec A
File name: Civil Legend & Abbreviation.dwg
Rev date: 01/27/05, 10:45:3
Dwg scale: AS NOTED
Rev.

DEPARTMENT OF THE ARMY
CORPS OF ENGINEERS
SACRAMENTO, CALIFORNIA

SACRAMENTO DISTRICT
IN-HOUSE DESIGN
1325 "J" STREET
SACRAMENTO, CA 95814-2922

NEVADA
NELLIS AFB
F/A-22 ADD/ALTER WEAPONS SCHOOL
UTILITY DETAILS

Sheet reference number:
C-502

Border Revised 08/30/04, 02/09/02.DWG Modified for Civil Eng Des Sec A, 12/7/04

REMOVE COVERED PATIO
(ROOF, COLUMNS CONCRETE SLAB)

REMOVE COVERED PATIO COMPLETE

SCALE: NONE

1 TYP C-503

REMOVE TRANSFORMER

REMOVE BLOCK WALL, (TYP.)
AND CONCRETE PAD

REMOVE HEAT PUMP

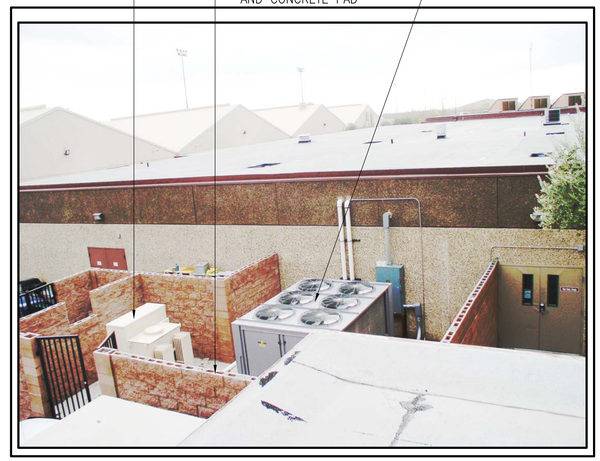

EQUIPMENT ENCLOSURE

SCALE: NONE

2 TYP C-503

REMOVE CMU MECHANICAL YARD, BLDG. 284

REMOVE CONCRETE CURB

REMOVE WATER VALVES (ANTI-SYPHON)

MECHANICAL YARD

SCALE: NONE

3 TYP C-503

EQUIPMENT ENCLOSURE

REMOVE CONCRETE FLOOR APPROX. 12" THICK

REMOVE SHED

STONE-FACED SHED

SCALE: NONE

4 TYP C-503

REMOVE CONCRETE SIDEWALK

REMOVE BAR-B-QUE

BAR-B-QUE

SCALE: NONE

5 TYP C-503

REMOVE CONCRETE STOOP

REMOVE 7 FT. RETAINING WALL

RETAINING WALL

SCALE: NONE

6 TYP C-503

US Army Corps
of Engineers
Sacramento District

Symbol	Description	Date	Approved

Designed by:
Dwn by:
Reviewed by:
Submitted by: Chief, Civil Eng Des Sec A

Date: 10/21/05
Spec No.: 1304
Design file no: 229-25-539
Drawing Code:
File name: Civil Legend & Abbreviation.dwg
Plot date: 01/27/05, 10:45:3
Dwg scale: AS_NOTED
Rev.

DEPARTMENT OF THE ARMY
CORPS OF ENGINEERS
SACRAMENTO, CALIFORNIA

SACRAMENTO DISTRICT
IN-HOUSE DESIGN
1325 "J" STREET
SACRAMENTO, CA 95814-2922

NEVADA

NELLIS AFB

F/A-22 ADD/ALTER WEAPONS SCHOOL

DEMOLITION DETAILS

Sheet
reference
number:
C-503

Border Revised 08/20/04, CQESKTD2.DWG Modified for Civil Eng Des Sec A, 12/7/04

J:\Nellis\Adal Weapons Sch\cadd\civil\Civil Legend & Abbreviation.dwg, scale:As Noted, 01/27/05, 10:45:3, by:DS

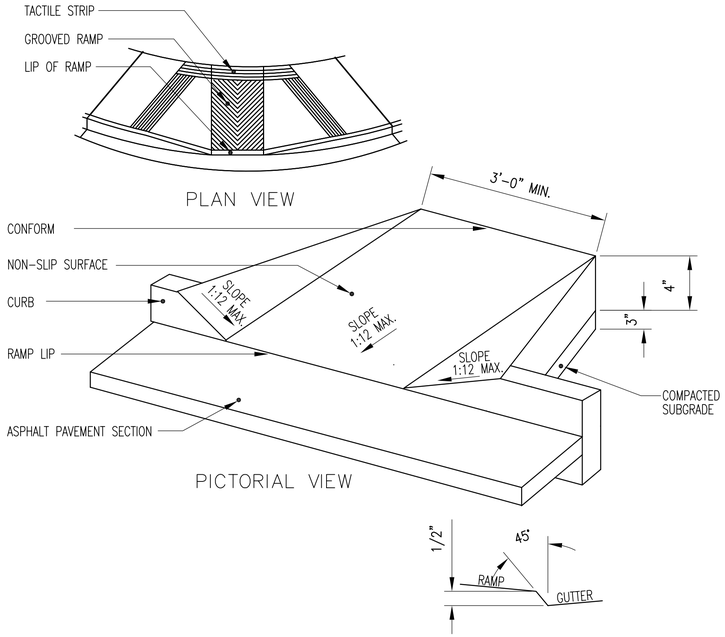

CURB RAMP

7

SCALE: NONE

C–141, C–142, C–143, C–501 | C–504

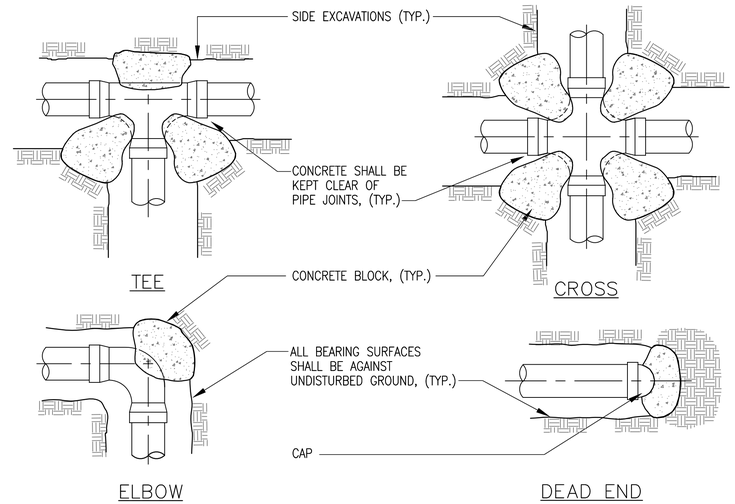

* BEARING AREA EACH DIRECTION OF THRUST IN SQUARE FEET					
PIPE SIZE	TEES AND CROSSES	90° ELBOWS	45° ELBOWS	22 1/2° ELBOWS	DEAD ENDS
6 IN.	3.23	4.52	2.48	1.29	3.23
8 IN.	5.71	7.96	4.31	2.15	5.70
12 IN.	12.70	17.98	104.30	4.95	12.70

* BASED ON **150 psi** WATER PRESSURE & **14 psi** ALLOWABLE SOIL BEARING PRESSURE

TYPICAL THRUST BLOCK INSTALLATION

4

SCALE: NONE

C–161, C162 | C–504

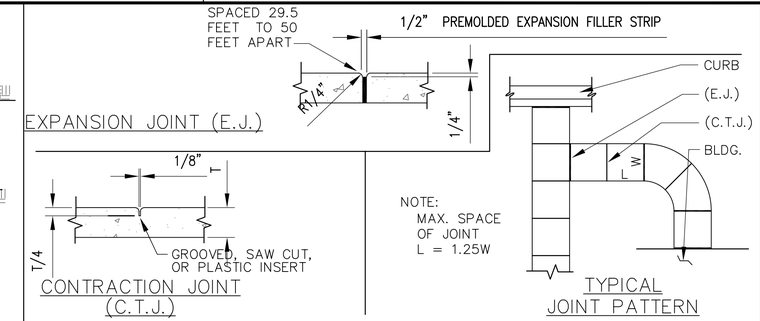

SIDEWALK JOINTS– TYPICAL

1

SCALE: NONE

C–501 | C–504

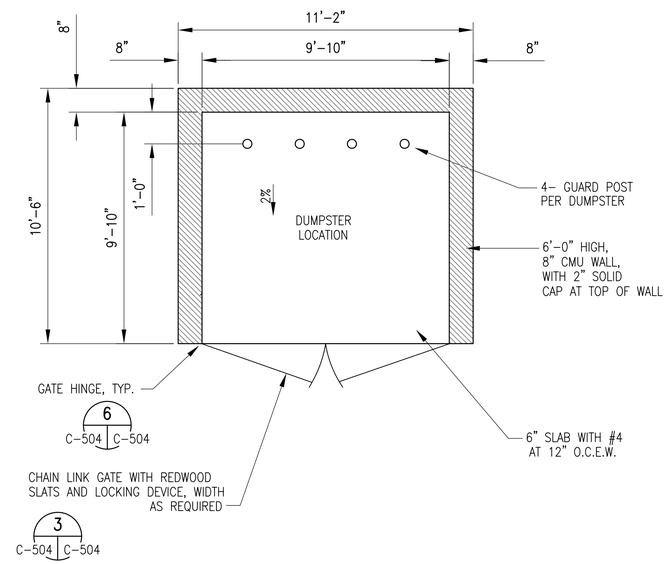

DUMPSTER ENCLOSURSE–III

2

SCALE: NONE

C–143, C–141 | C–504

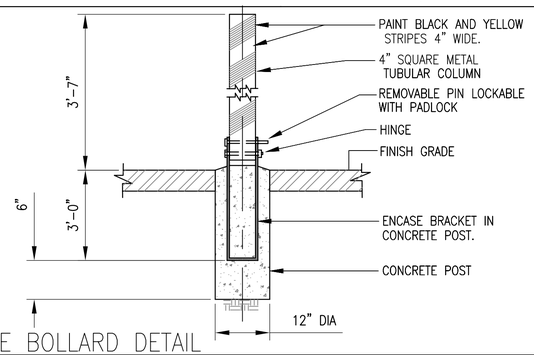

LOCKABLE BOLLARD DETAIL

8

SCALE: NONE

C–151, C–152, C–153 | C–504

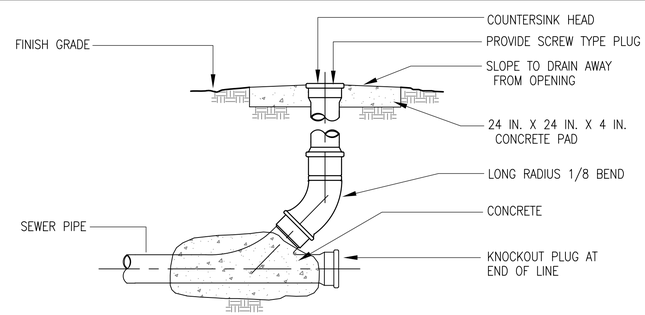

SURFACE CLEANOUT

5

SCALE: NONE

C–162 | C–504

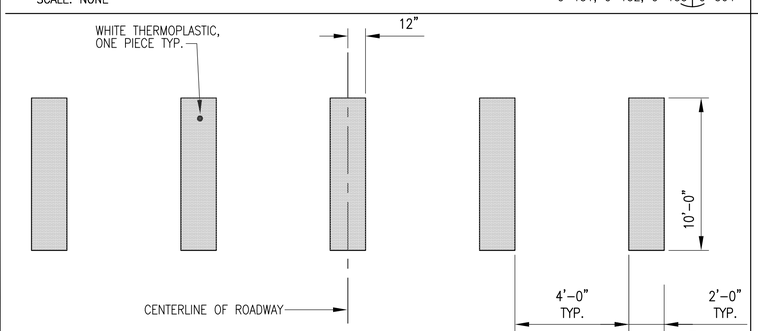

CROSS WALK DETAIL

9

SCALE: NONE

C–142 | C–504

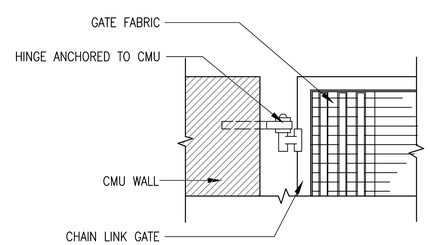

GATE HINGE DETAIL

6

SCALE: NONE

C–504 | C–504

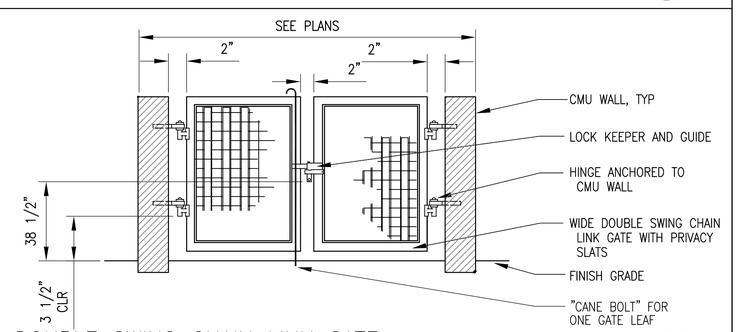

DOUBLE SWING CHAIN LINK GATE

3

SCALE: NONE

C–504 | C–504

US Army Corps of Engineers
Sacramento District

Symbol	Description	Date	Approved

Rev.

Date: 10/21/05
Spec No.:
Designed by:
Design file no: 229-25-539
Dwn by: 1304
Drawing Code:
Reviewed by:
File name: Civil Legend & Abbreviation.dwg
Plot date: 01/27/05, 10:45:3
Dwg scale: AS NOTED
Submitted by: Chief, Civil Eng Sec A

DEPARTMENT OF THE ARMY
CORPS OF ENGINEERS
SACRAMENTO, CALIFORNIA

SACRAMENTO DISTRICT
IN-HOUSE DESIGN
1325 "J" STREET
SACRAMENTO, CA 95814-2922

NEVADA

NELLIS AFB

F/A-22 ADD/ALTER WEAPONS SCHOOL

MISCELLANEOUS DETAILS

Sheet reference number:
C–504

Border Revised 08/20/04, CORSHOD.DWG (Modified for Civil Eng Sec A, 12/7/04)