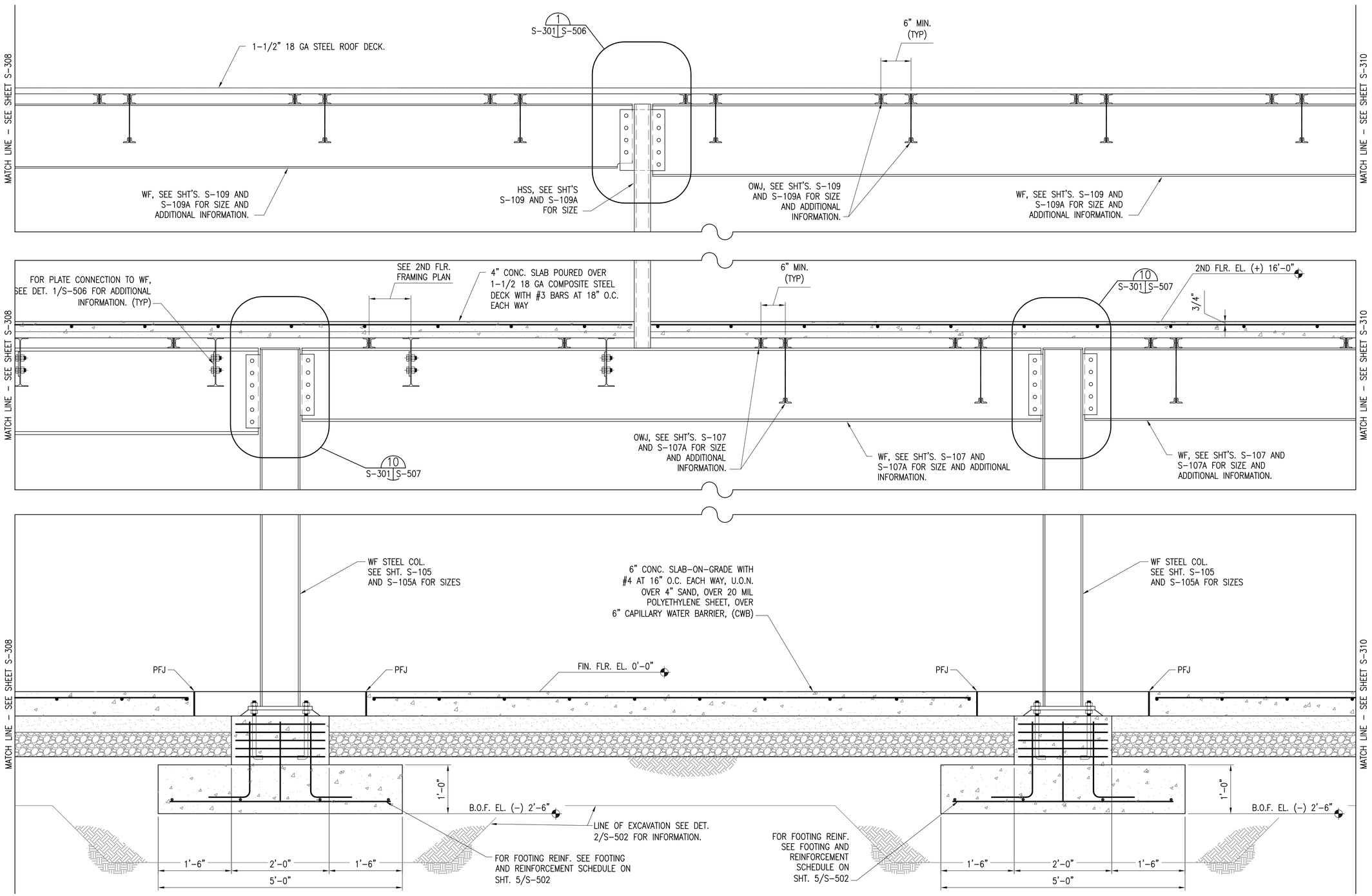

ELEVATION – ALONG GRID LINE 'I'

SCALE: 1"=1'-0"

B S-103, S-105, S-107, S-109 S-309

US Army Corps of Engineers
Sacramento District

Symbol	Description	Date	Approved

Designed by: N. Grossorth, C. Van Dyke
Date: 10/21/05
Rev.
Dwn by: JC
Spec. No.: 1304
Design File no: 229-25-539
Drawing Code:
Reviewed by: J. Pardegos
Submitted by: Jeff R. Nelis
Chief, Struct. Des. Sec.
File name: N39C-303XX.dwg
Plot date: 09/19/05, 14:29:42
Dwg scale: AS_NOTED

DEPARTMENT OF THE ARMY
CORPS OF ENGINEERS
SACRAMENTO, CALIFORNIA

SACRAMENTO DISTRICT
IN-HOUSE DESIGN
1325 J STREET
SACRAMENTO, CA 95814-2922

NEVADA
NELLIS AFB
F/A-22 ADD/ALTER WEAPONS SCHOOL

ELEVATION ALONG GRID LINE 'I'

Sheet reference number:
S-309

Border Revised 03/01/04, CCEIMT02.DWG

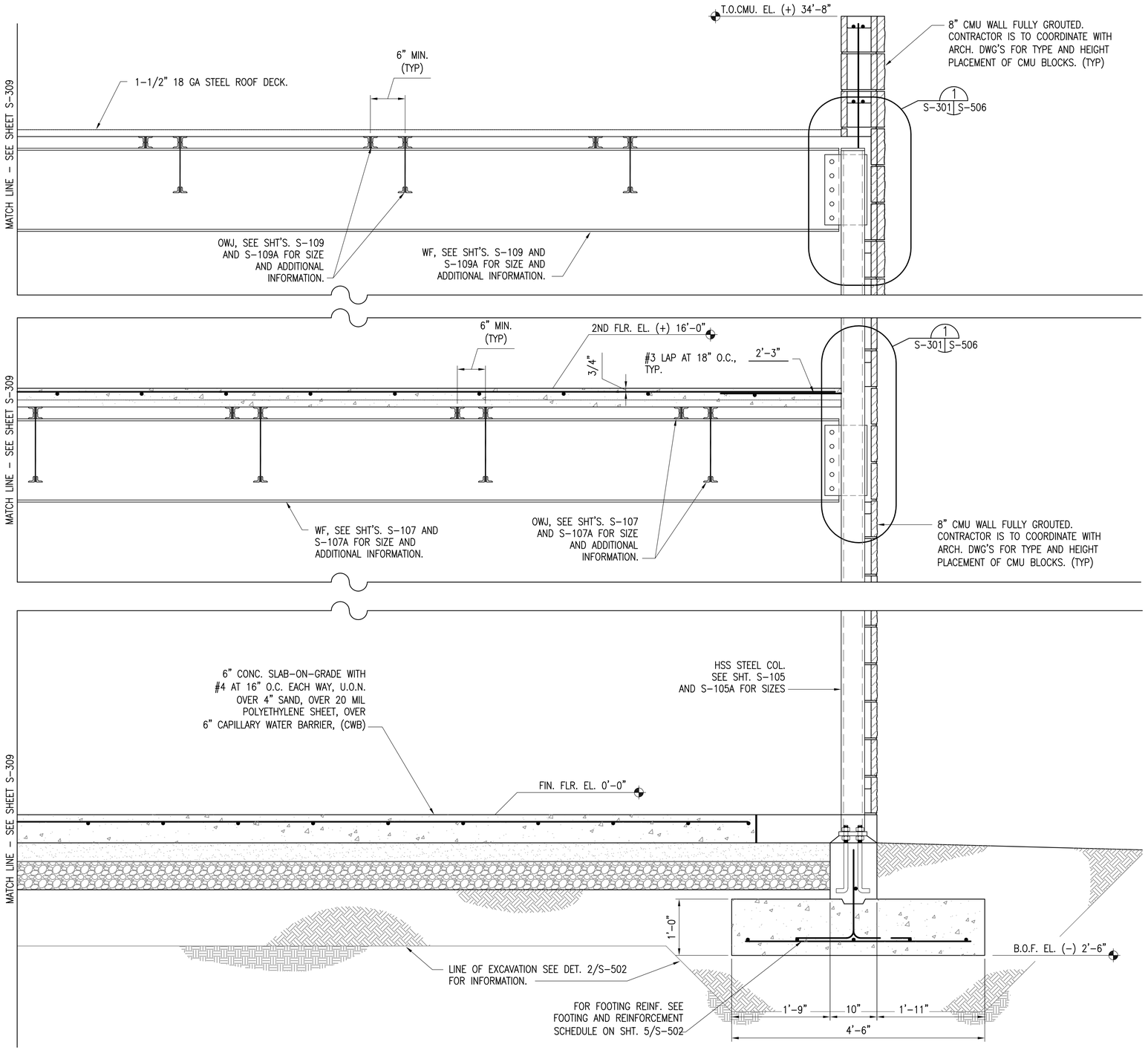

ELEVATION – ALONG GRID LINE 'I'

SCALE: 1"=1'-0"

B
S-103, S-105, S-107, S-109 S-310

US Army Corps of Engineers
Sacramento District

Symbol	Description	Date	Approved

Designed by: N. Grossarth, C. Van Dyke
Date: 10/21/05
Rev.
Dwn by: JC
Spec. No.: 1304
Design File no: 229-25-539
Drawing Code:
Reviewed by: J. Pantagos
Submitted by: Maj R. Norris
Chief, Struct. Des. Sec.
File name: N39C-S1000.dwg
Plot date: 09/19/05, 14:21:33
Dwg scale: AS_NOTED

DEPARTMENT OF THE ARMY
CORPS OF ENGINEERS
SACRAMENTO, CALIFORNIA

SACRAMENTO DISTRICT
IN-HOUSE DESIGN
1325 J STREET
SACRAMENTO, CA 95814-2922

NEVADA

NELLIS AFB

F/A-22 ADD/ALTER WEAPONS SCHOOL

ELEVATION
ALONG GRID LINE 'I'

Sheet reference number:
S-310

Border Revised 03/01/04, COE3411D2.DWG

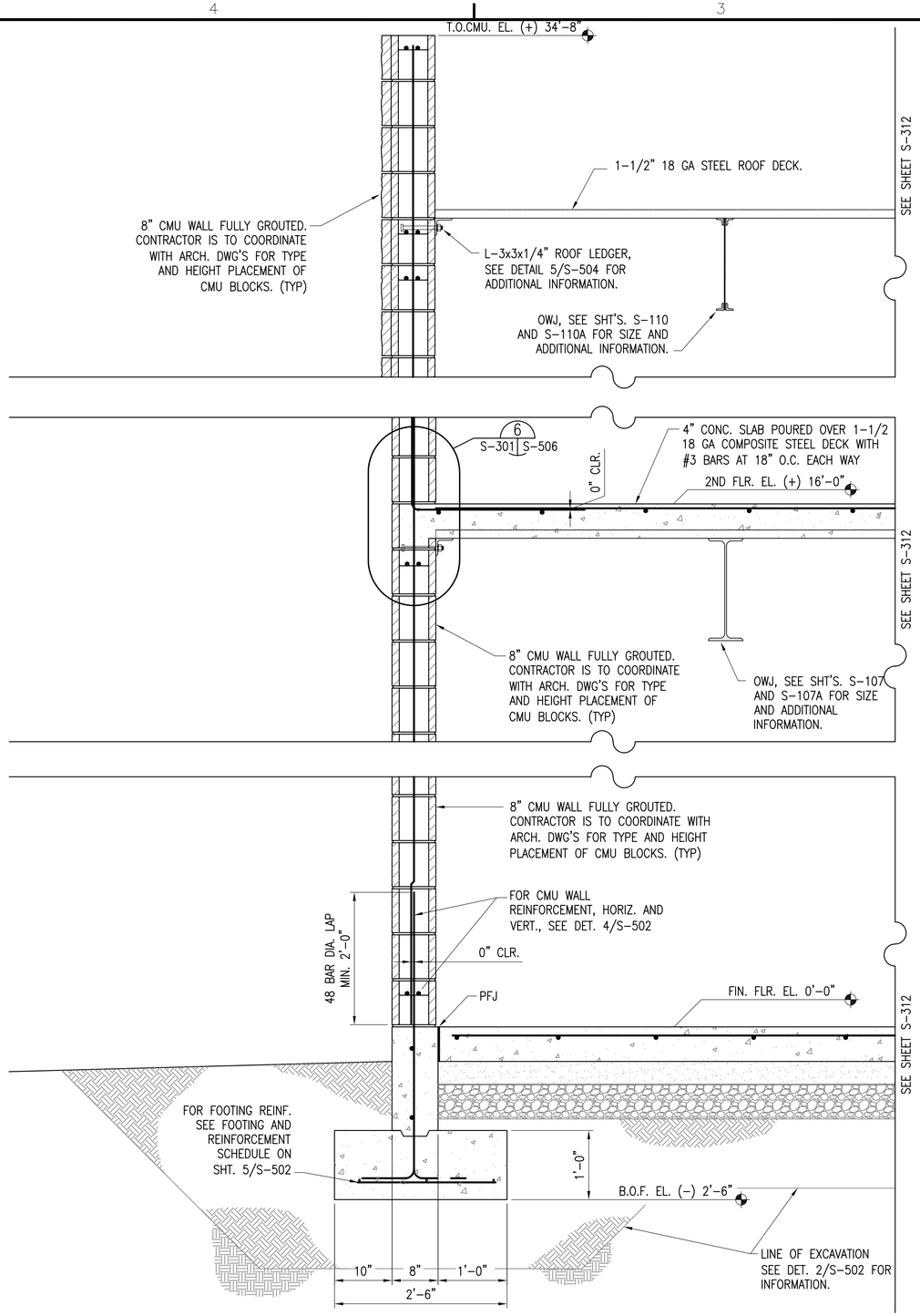

ELEVATION – ALONG GRID LINE 'E'

SCALE: 1"=1'-0"

C

S-103, S-105, S-107, S-109 S-311

US Army Corps of Engineers
Sacramento District

Symbol	Description	Date	Approved

Designed by: N. Grossorth, C. Van Dyke
Date: 10/21/05
Rev.
Dwn by: JC
Spec. No.: 1304
Design File no: 229-25-539
Drawing Code:
Reviewed by: J. Pardegos
Submitted by: Jul R. Norris
Chief, Struct. Des. Sec.
File name: N39C-311XX.dwg
Plot date: 09/19/05, 14:22:24
Dwg scale: AS_NOTED

DEPARTMENT OF THE ARMY
CORPS OF ENGINEERS
SACRAMENTO, CALIFORNIA

SACRAMENTO DISTRICT
IN-HOUSE DESIGN
1325 J STREET
SACRAMENTO, CA 95814-2922

NEVADA

NELLIS AFB

F/A-22 ADD/ALTER WEAPONS SCHOOL

ELEVATION
ALONG GRID LINE 'E'

Sheet reference number:
S-311

Border Revised: 03/01/04, CCSDM1702.DWG

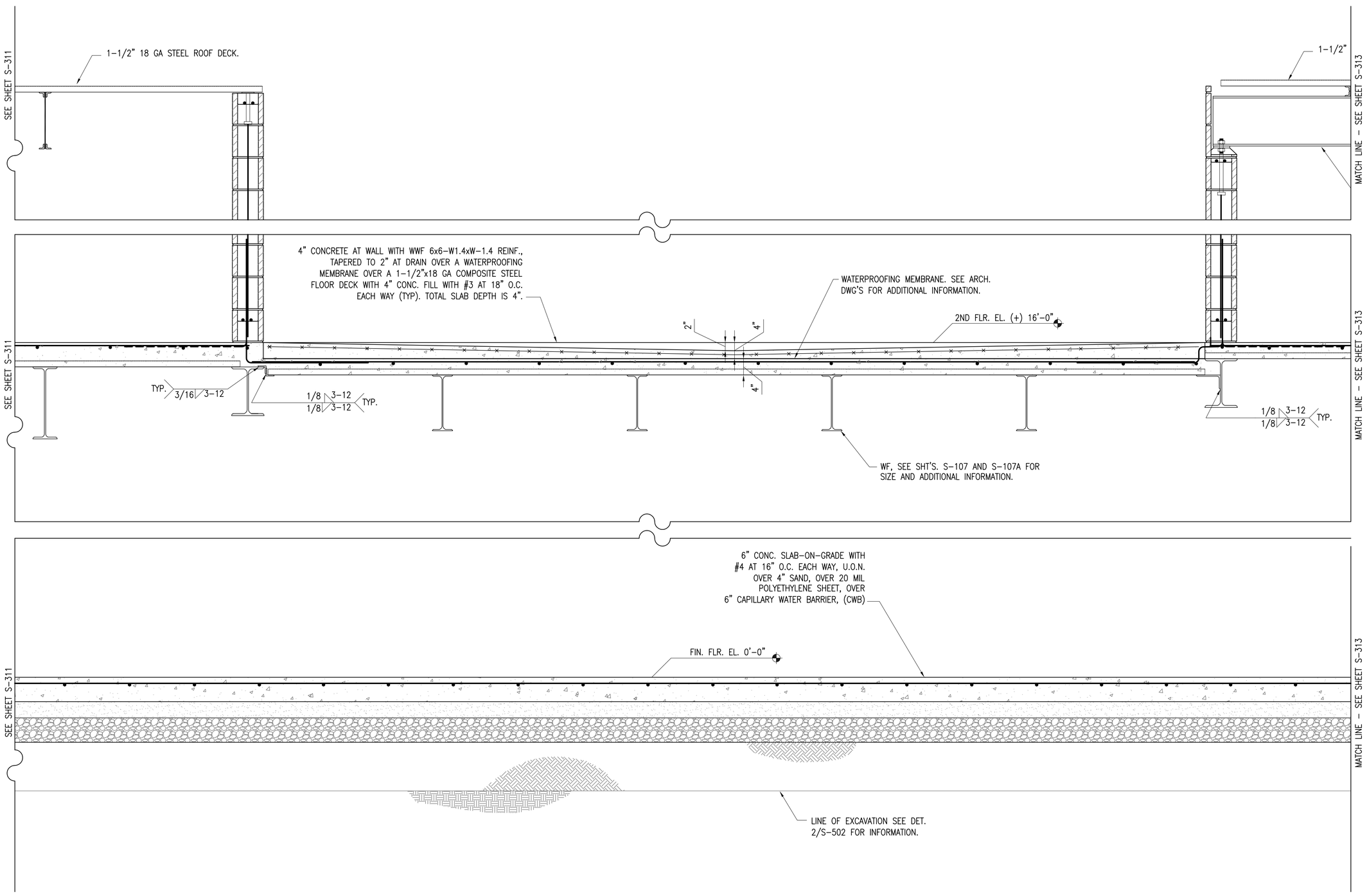

ELEVATION – ALONG GRID LINE 'E'

SCALE: 1"=1'-0"

S-103, S-105, S-107, S-109 C S-312

US Army Corps of Engineers
Sacramento District

Symbol	Description	Date	Approved

Designed by: N. Grossarth, C. Van Dyke
Dwn by: JC
Ckd by: J. Pentages
Spec writer: R. Nolte
Chief, Struct. Des. Sec.
Date: 10/21/05
Spec No.: 1304
Design File no: 229-25-539
Drawing Code:
Rev.
File name: N39C-312XX.dwg
Plot date: 09/19/05, 14:28:41
Dwg scale: AS_NOTED

DEPARTMENT OF THE ARMY
CORPS OF ENGINEERS
SACRAMENTO, CALIFORNIA

SACRAMENTO DISTRICT
IN-HOUSE DESIGN
1325 J STREET
SACRAMENTO, CA 95814-2922

NEVADA

NELLIS AFB

F/A-22 ADD/ALTER WEAPONS SCHOOL

ELEVATION
ALONG GRID LINE 'E'

Sheet reference number:
S-312

Border Revised: 03/01/04, CDESIGN02.DWG

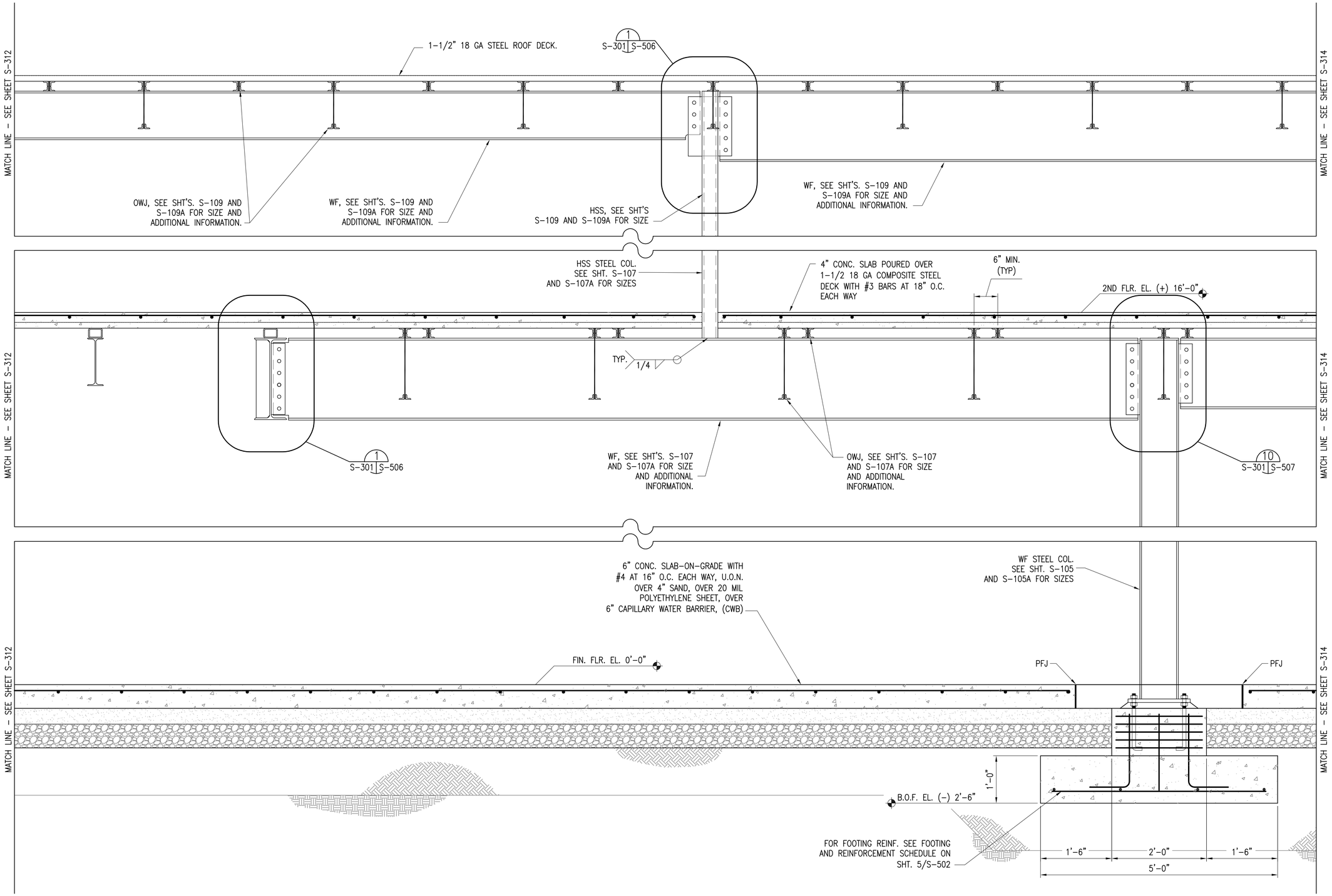

ELEVATION – ALONG GRID LINE 'E'

SCALE: 1"=1'-0"

S-103, S-105, S-107, S-109 C S-313

US Army Corps of Engineers
Sacramento District

Symbol	Description	Date	Approved

Designed by: N. Grossorth, C. Van Dyke
Date: 10/21/05
Rev.
Dwn by: JC
Spec No.: 1304
Design File no: 229-25-539
Drawing Code:
Reviewed by: J. Pardegos
Submitted by: Jul B. Nelis
Chief, Struct. Des. Sec.
File name: N39C-313XX.dwg
Plot date: 09/19/05, 14:27:51
Dwg scale: AS_NOTED

DEPARTMENT OF THE ARMY
CORPS OF ENGINEERS
SACRAMENTO, CALIFORNIA

SACRAMENTO DISTRICT
IN-HOUSE DESIGN
1325 J STREET
SACRAMENTO, CA 95814-2922

NEVADA
NELLIS AFB
F/A-22 ADD/ALTER WEAPONS SCHOOL
ELEVATION
ALONG GRID LINE 'E'

Sheet reference number:
S-313

Border Revised 03/01/04, CODE=0722.DWG

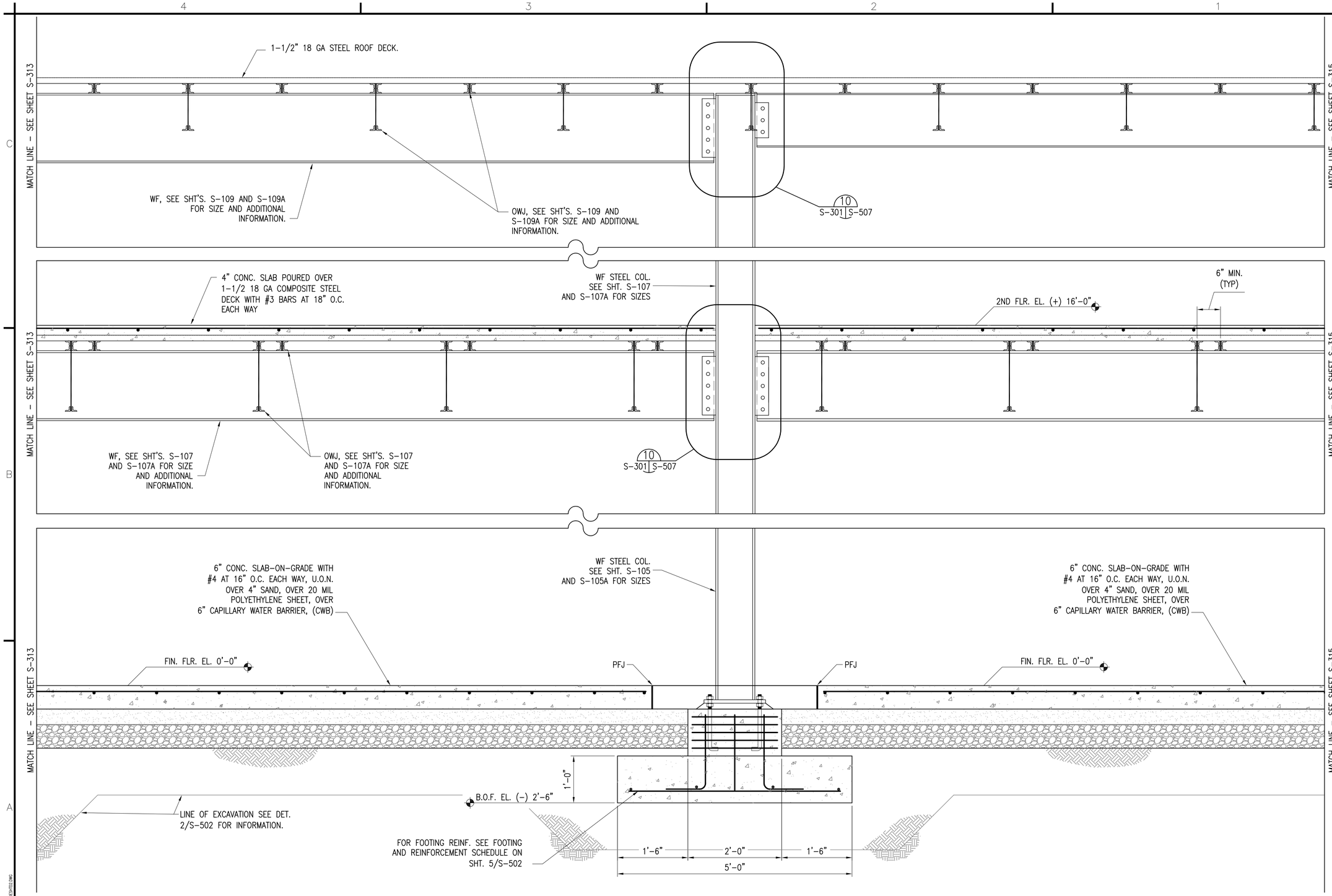

ELEVATION – ALONG GRID LINE 'E'

SCALE: 1"=1'-0"

C
S-103, S-105, S-107, S-109 S-314

US Army Corps of Engineers
Sacramento District

Symbol	Description	Date	Approved

Designed by: N. Grossarth, C. Van Dyke
Dwn by: JC
Spec No.: 1304
Reviewed by: J. Pantagos
Submitted by: Chief, Struct. Des. Sec.
Date: 10/21/05
Design File no: 229-25-539
Drawing Code:
Rev.
File name: N39S-314XXX.dwg
Plot date: 09/19/05, 14:30:20
Dwg scale: AS_NOTED

DEPARTMENT OF THE ARMY
CORPS OF ENGINEERS
SACRAMENTO, CALIFORNIA

SACRAMENTO DISTRICT
IN-HOUSE DESIGN
1325 J STREET
SACRAMENTO, CA 95814-2922

NEVADA

NELLIS AFB

F/A-22 ADD/ALTER WEAPONS SCHOOL

ELEVATION ALONG GRID LINE 'E'

Sheet reference number:
S-314

Border Revised 03/01/04, CODENTITLE.DWG

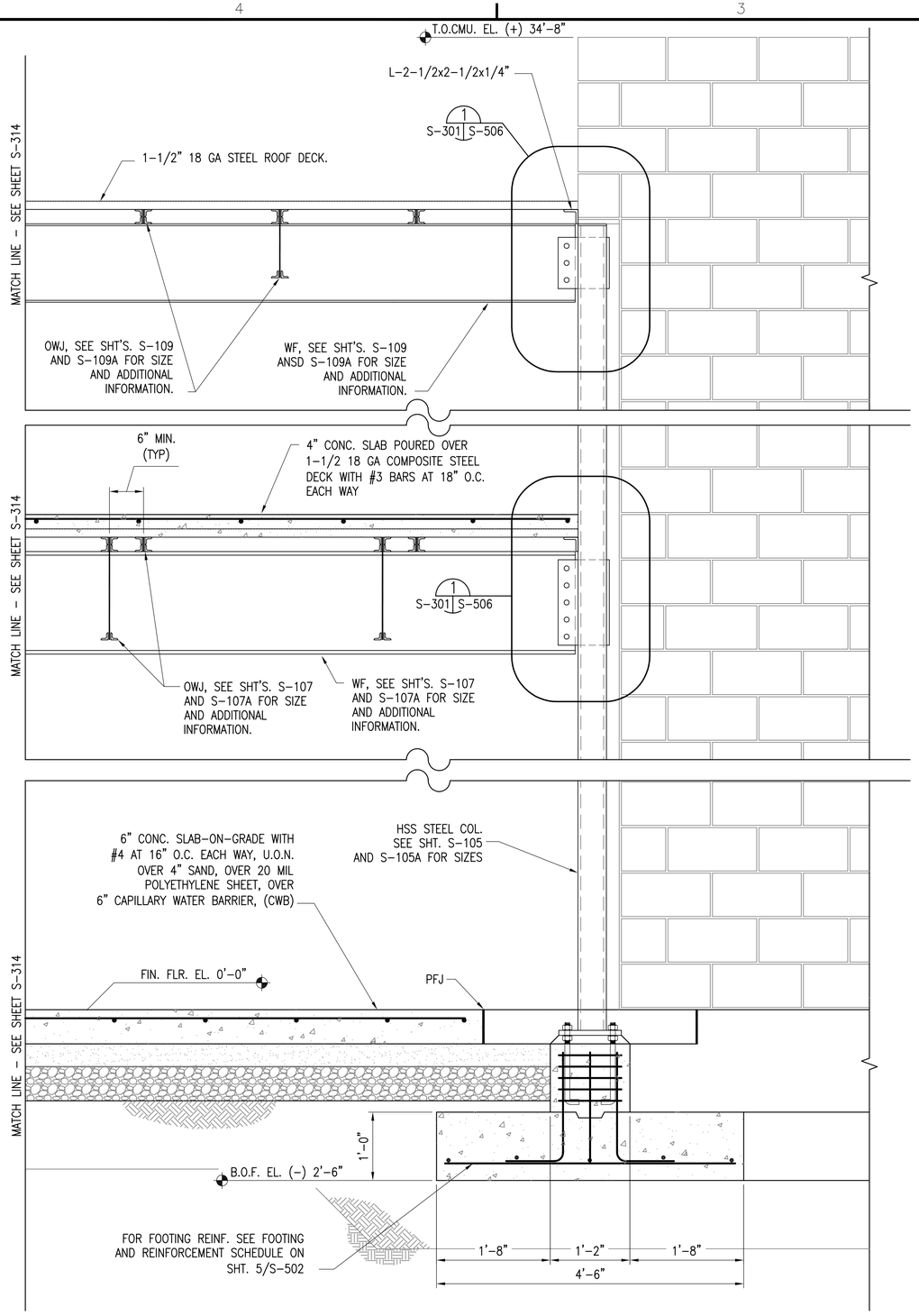

ELEVATION – ALONG GRID LINE 'E'

SCALE: 1"=1'-0"

C
S-103, S-105, S-107, S-109 S-315

Border Revised 03/01/04, CVDSHEET2.DWG

US Army Corps of Engineers
Sacramento District

Symbol	Description	Date	Approved

Designed by: N. Grossarth, C. Van Dyke
Date: 10/21/05
Rev.
Dwn by: JC
Spec No.: 1304
Design File no: 229-25-539
Drawing Code:
Reviewed by: J. Pentages
Submitted by: S/ R. Norris
Chief, Struct. Des. Sec.
File name: N39C-315W01.dwg
Plot date: 09/19/05, 14:32:30
Dwg scale: AS_NOTED

DEPARTMENT OF THE ARMY
CORPS OF ENGINEERS
SACRAMENTO, CALIFORNIA

SACRAMENTO DISTRICT
IN-HOUSE DESIGN
1325 J STREET
SACRAMENTO, CA 95814-2922

NEVADA

NELLIS AFB

F/A-22 ADD/ALTER WEAPONS SCHOOL

ELEVATION
ALONG GRID LINE 'E'

Sheet reference number:
S-315

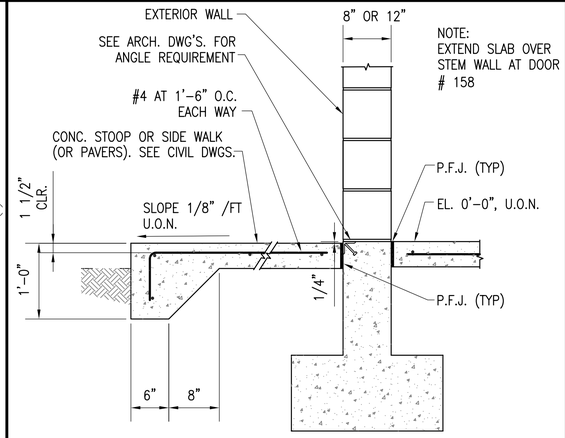

TYP. EXTERIOR DOOR SILL

SCALE: 1"=1'-0"

TYP. 1 S-501

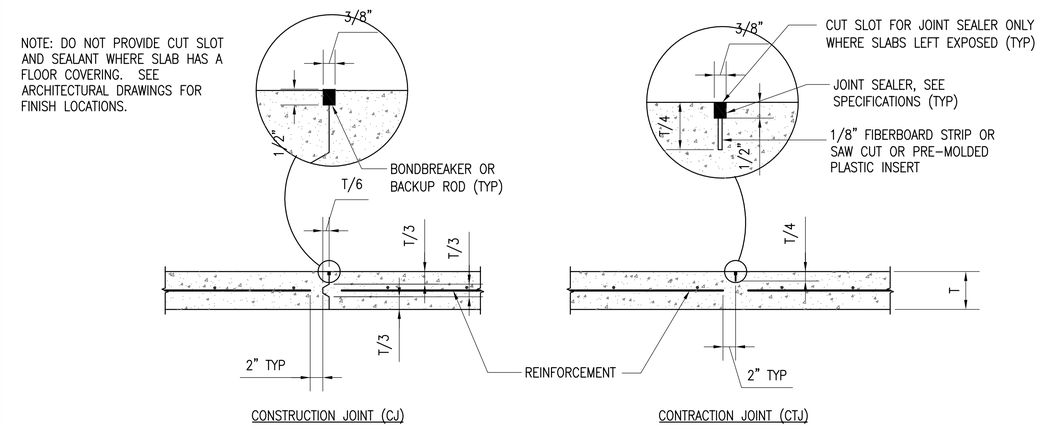

TYP. SLAB CONTROL JOINTS (NON-VEHICULAR), 6" THICK INTERIOR SLABS

SCALE: 1"=1'-0"

TYP. 2 S-501

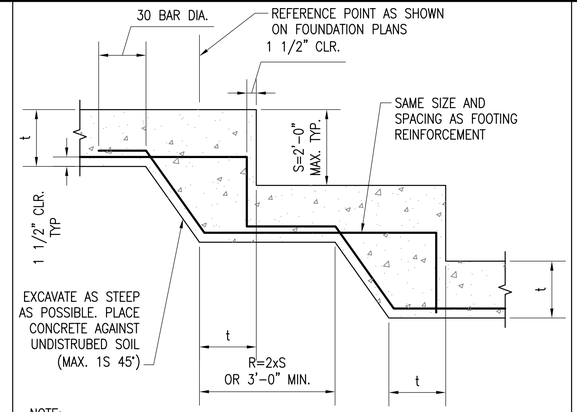

TYP. STEPPED FOOTING (S ——— S)

SCALE: 1/2"=1'-0"

TYP. 3 S-501

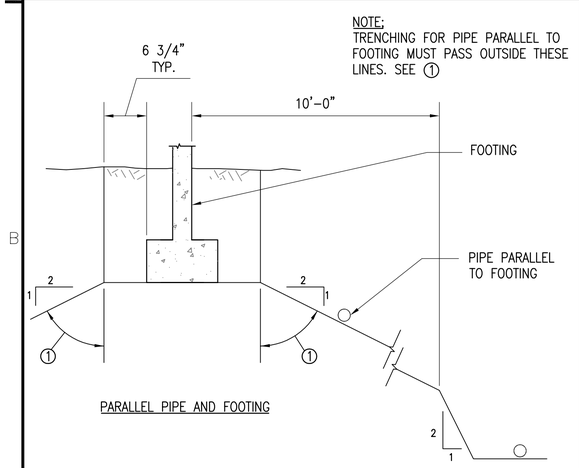

PARALLEL PIPE AND FOOTING

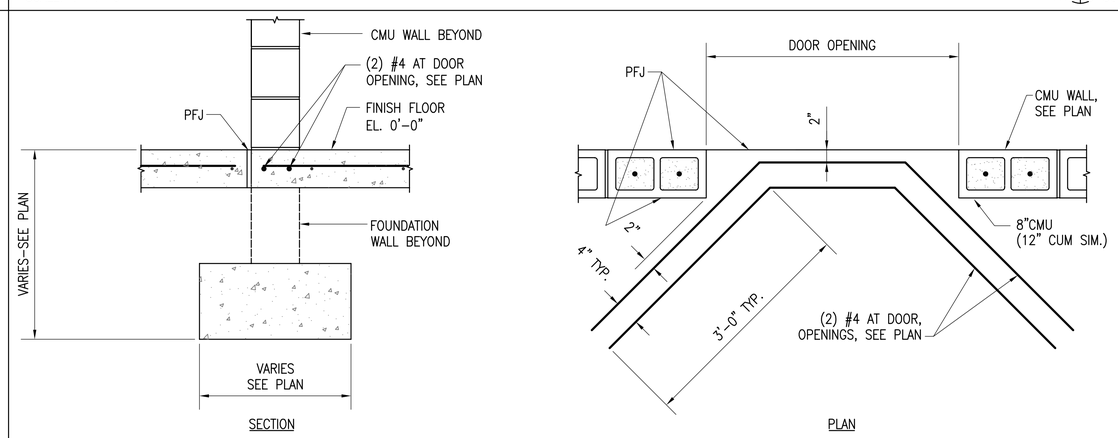

TYP. INTERIOR DOOR SILL WITHOUT THRESHOLD, U.O.N.

SCALE: 1"=1'-0"

TYP. 4 S-501

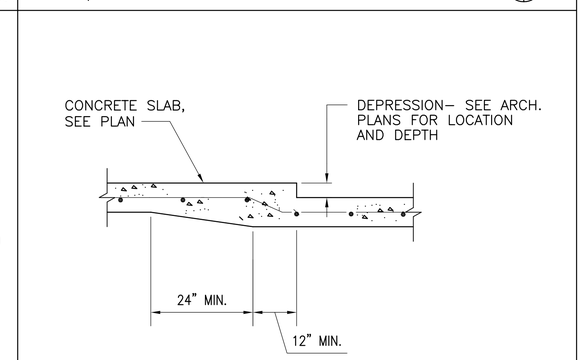

TYPICAL DEPRESSED SLAB ON GRADE <6"

SCALE: NONE

TYP. 5 S-501

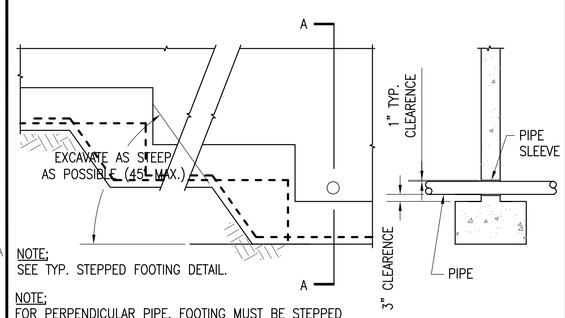

TYP. BURIED PIPE AT FOOTING

SCALE: 3/8 "=1'-0"

TYP. 6 S-501

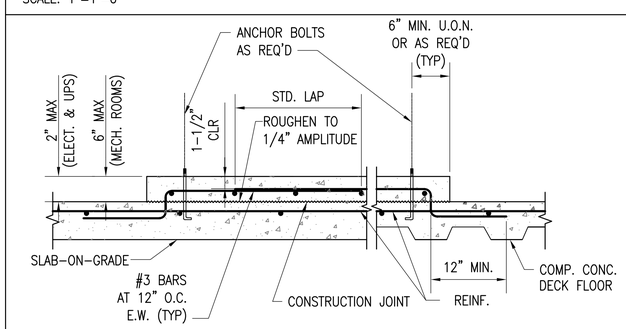

CONCRETE PAD – INTERIOR

NOTE:
1. PAD DIMENSIONS, ANCHOR BOLTS SIZE AND LOCATIONS, AND OTHER EMBEDDED ITEMS SHALL CONFORM TO EQUIPMENT MANUFACTURER'S REQUIREMENTS.
2. EQUIPMENT MANUFACTURER SHALL SELECT THE TYPE OF PAD

TYP. EQUIPMENT CONCRETE PAD

SCALE: NONE

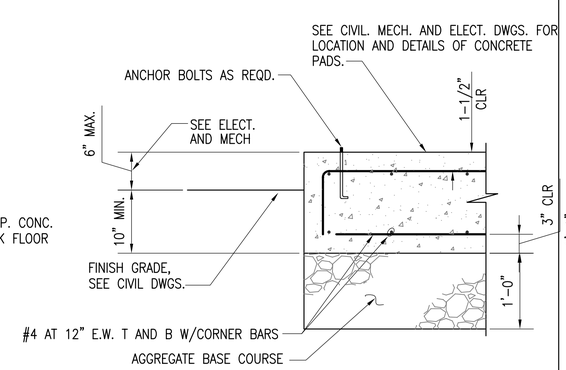

CONCRETE PAD – EXTERIOR

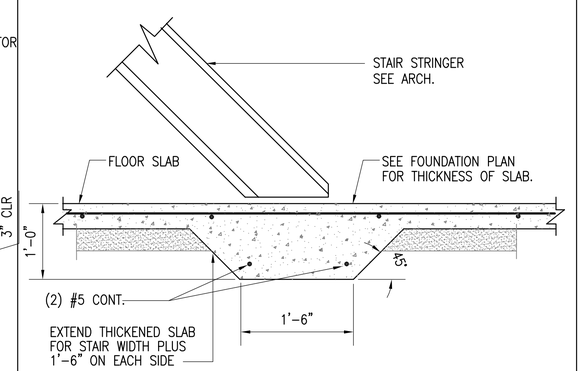

STAIR STRINGER TO SLAB ON GRADE

SCALE: NONE

TYP. 8 S-501

US Army Corps of Engineers
Sacramento District

Symbol	Description	Date	Approved

Designed by: N. Grossarth, C. Van Dyke
Dwn by: JC
Spec No.: 1304
Reviewed by: J. Pantages
Submitted by: /s/ R. Burns, Chief, Struct. Des. Sec.
Date: 10/21/05
Rev.
Design File no: 229-25-539
Drawing Code:
File name: N305-S01X00.dwg
Plot date: 09/30/05, 11:23:57
Dwg scale: AS_NOTED

DEPARTMENT OF THE ARMY
CORPS OF ENGINEERS
SACRAMENTO, CALIFORNIA

SACRAMENTO DISTRICT
IN-HOUSE DESIGN
1325 J STREET
SACRAMENTO, CA 95814-2922

NEVADA
NELLIS AFB
F/A-22 ADD/ALTER WEAPONS SCHOOL
TYPICAL CONCRETE DETAILS

Sheet reference number:
S-501

Border Revised 03/01/04, CXDSHT02.DWG

NOTE:
USE 30-POUND ASPHALT SATURATED FELT STRIP (FULL DEPTH OF SLAB) AT PFJ AND COLUMN ISOLATION JOINTS, TYP.

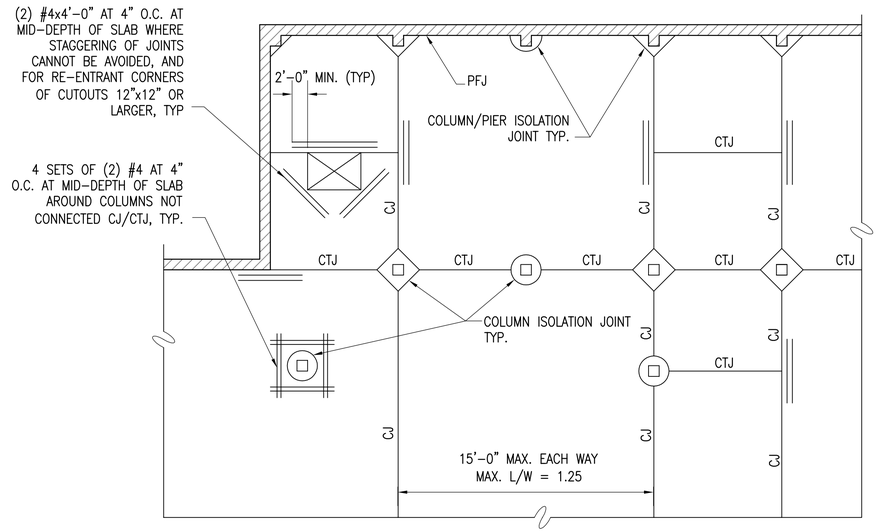

TYP. SLAB-ON-GRADE (NON-VEHICULAR) SLAB JOINTING AND REINFORCING PATTERENS

SCALE: NOT TO SCALE

TYP. 1 S-502

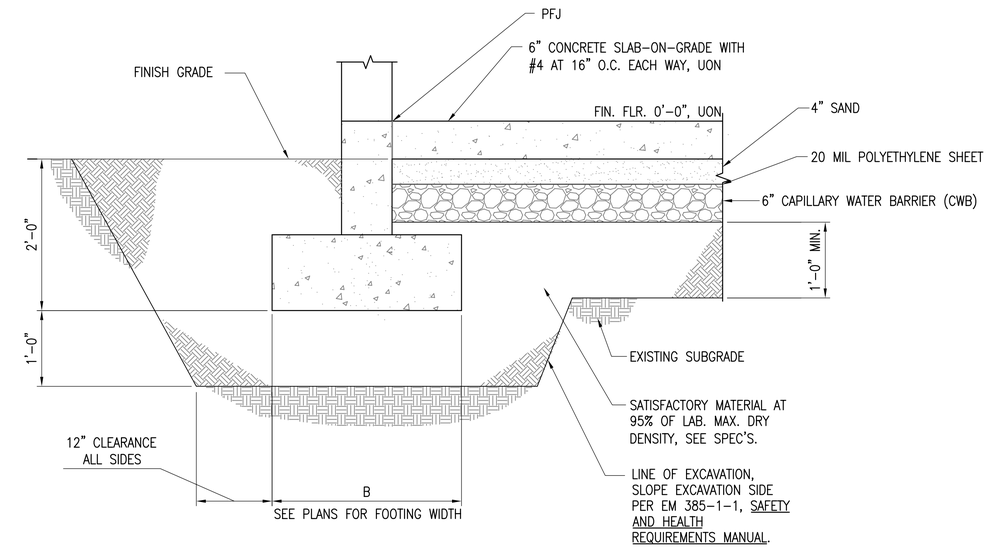

NOTE:
SIMILAR DETAIL FOR INTERIOR WALL FOOTINGS AND COLUMN FOOTINGS.

TYP. EXTERIOR AND INTERIOR FOOTING AND SLAB EXCAVATION DETAIL

SCALE: NONE

TYP. 2 S-502

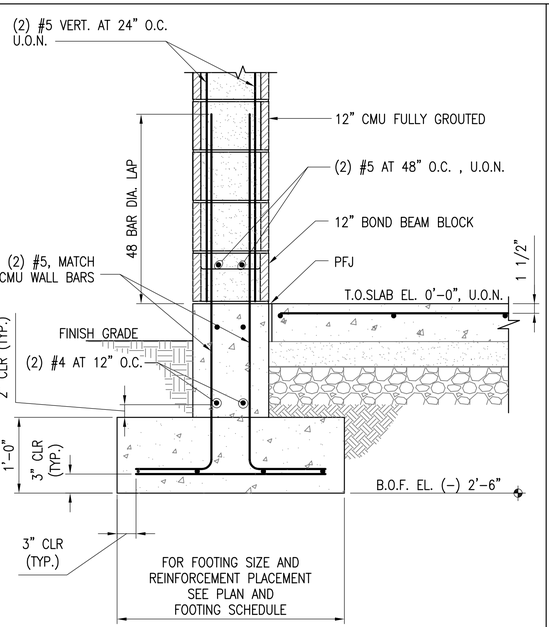

TYP. 12" EXTERIOR CMU WALL FOOTING

SCALE: 1"=1'-0"

TYP 3 S-502

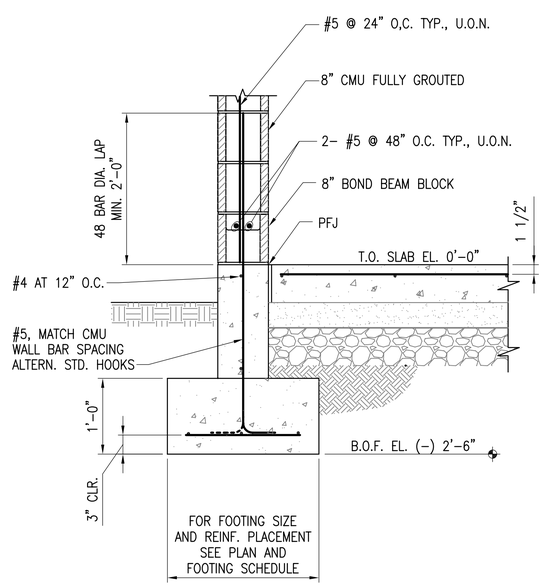

TYP. 8" EXTERIOR CMU WALL FOOTING

SCALE: 1"=1'-0"

TYP 4 S-502

SPREAD FOOTING SIZE AND REINFORCEMENT SCHEDULE		CMU WALL FOOTING SIZE AND REINFORCEMENT SCHEDULE		
SIZE (WIDTH x LENGTH x THICKNESS)	REINFORCEMENT	CMU THICK.	SIZE (WIDTH x LENGTH x THICKNESS)	REINFORCEMENT
3'-6" x 3'-6" x 1'-0"	(3) #6 AT 1'-6" O.C. EACH WAY	8"	2'-0" x CONT. x 1'-0"	TRANSVERSE: #5 AT 14" O.C. LONGITUDINAL: (2) #4 AT 18" O.C. CONTINUOUS
4'-0" x 4'-0" x 1'-0"	(3) #6 AT 1'-9" O.C. EACH WAY			
4'-3" x 4'-3" x 1'-0"	(3) #6 EQUALLY SPACED EACH WAY	8"	2'-6" x CONT. X 1'-0"	TRANSVERSE: #5 AT 14" O.C. LONGITUDINAL: (3) #4 AT 12" O.C. CONTINUOUS
5'-0" x 5'-0" x 1'-0"	(3) #6 AT 2'-3" O.C. EACH WAY			
5'-6" x 5'-6" x 1'-0"	(4) #6 AT 1'-8" O.C. WACH WAY	8"	3'-0" x CONT. x 1'-0"	TRANSVERSE: #5 AT 14" O.C. LONGITUDINAL: (3) #4 AT 15" O.C. CONTINUOUS
5'-9" x 5'-9" x 1'-0"	(4) #6 AT 1'-9" O.C. EACH WAY			
6'-3" x 6'-3" x 1'-0"	(5) #6 AT 1'-5" O.C. EACH WAY	8"	3'-6" x CONT. x 1'-0"	TRANSVERSE: #5 AT 14" O.C. LONGITUDINAL: (4) #4 AT 12" O.C. CONTINUOUS
7'-3" x 7'-3" x 1'-0"	(7) #6 EQUALLY SPACED EACH WAY			
7'-0" x 5'-0" x 1'-0"	#6 AT 12" O.C. EACH WAY	8"	4'-0" x CONT. x 1'-0"	TRANSVERSE: #5 AT 14" O.C. LONGITUDINAL: (4) #4 AT 14" O.C. CONTINUOUS
4'-6" x 4'-6" x 1'-0"	#6 AT 12" O.C. EACH WAY			
5'-0" x 2'-6" x 1'-0"	#6 AT 12" O.C. EACH WAY	12"	2'-6" x CONT. x 1'-0"	TRANSVERSE: #5 AT 14" O.C. LONGITUDINAL: (3) #4 AT 12" O.C. CONTINUOUS
		12"	3'-0" x CONT. x 1'-0"	TRANSVERSE: #5 AT 14" O.C. LONGITUDINAL: (3) #4 AT 15" O.C. CONTINUOUS

FOOTING SIZE AND REINFORCEMENT SCHEDULE

SCALE: NOT TO SCALE

TYP 5 S-502

US Army Corps of Engineers
Sacramento District

Symbol	Description	Date	Approved

Designed by: N. Grossarth, C. Van Dyke
Dwn by: JC
Spec No.: 1304
Reviewed by: J. Pentages
Submitted by: Chief, Struct. Des. Sec.
Date: 10/21/05
Design File no: 229-25-539
Drawing Code:
Rev.
File name: N39C-S02000.dwg
Plot date: 09/23/05, 11:11:33
Dwg scale: AS_NOTED

DEPARTMENT OF THE ARMY
CORPS OF ENGINEERS
SACRAMENTO, CALIFORNIA

SACRAMENTO DISTRICT
IN-HOUSE DESIGN
1325 J STREET
SACRAMENTO, CA 95814-2922

NEVADA

NELLIS AFB

F/A-22 ADD/ALTER WEAPONS SCHOOL

TYPICAL FOOTING DETAILS

Sheet reference number:
S-502

Border Revised: 03/01/04, CDESCH02.DWG

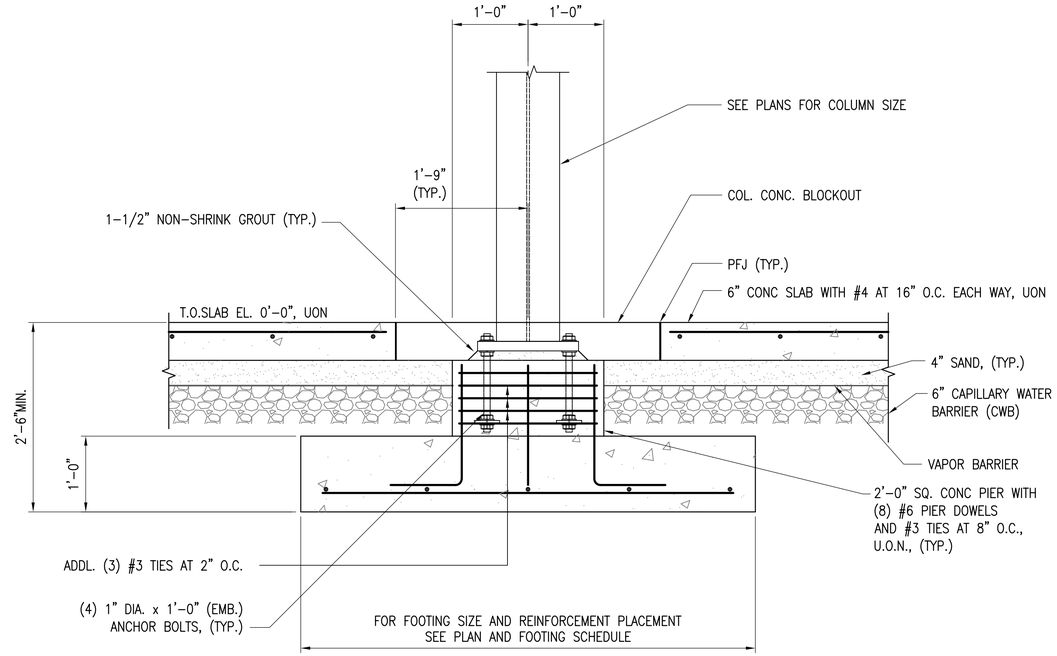

TYP. INTERIOR COLUMN ELEVATION

SCALE: 1"=1'-0"

1 / TYP. S-503

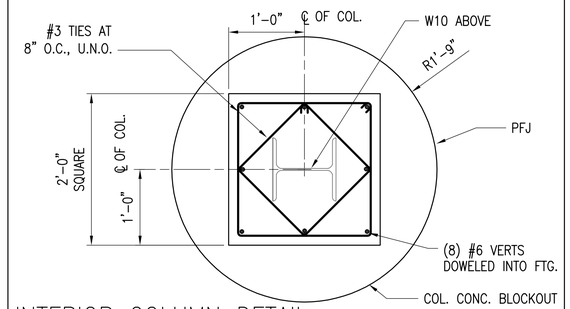

INTERIOR COLUMN DETAIL

SCALE: 1"=1'-0"

2 / TYP. S-503

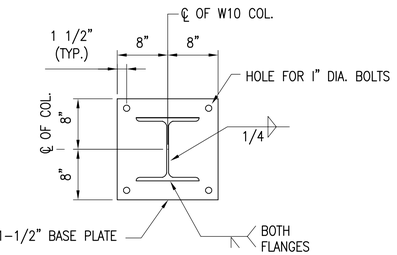

TYP. DETAIL

SCALE: 1"=1'-0"

3 / TYP. S-503

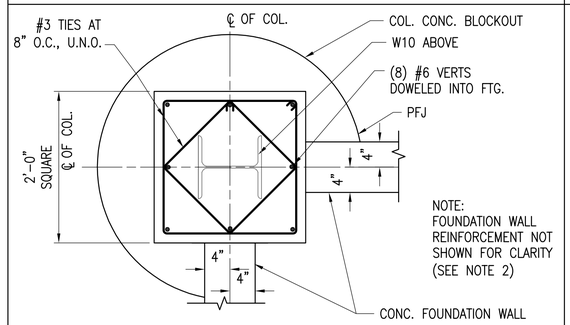

CORNER COLUMN DETAIL

SCALE: 1"=1'-0"

4 / TYP. S-503

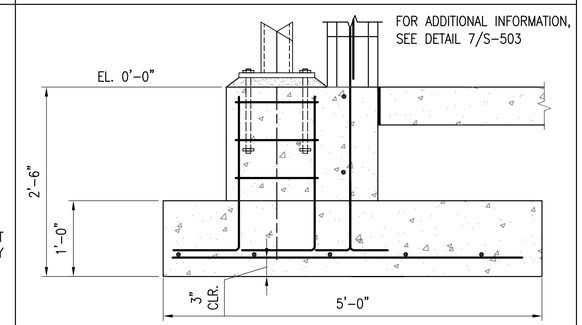

RIDGE COL FTG DETAIL AT MECH. YARD

SCALE: 1"=1'-0"

5 / S-104, S-104A / S-503

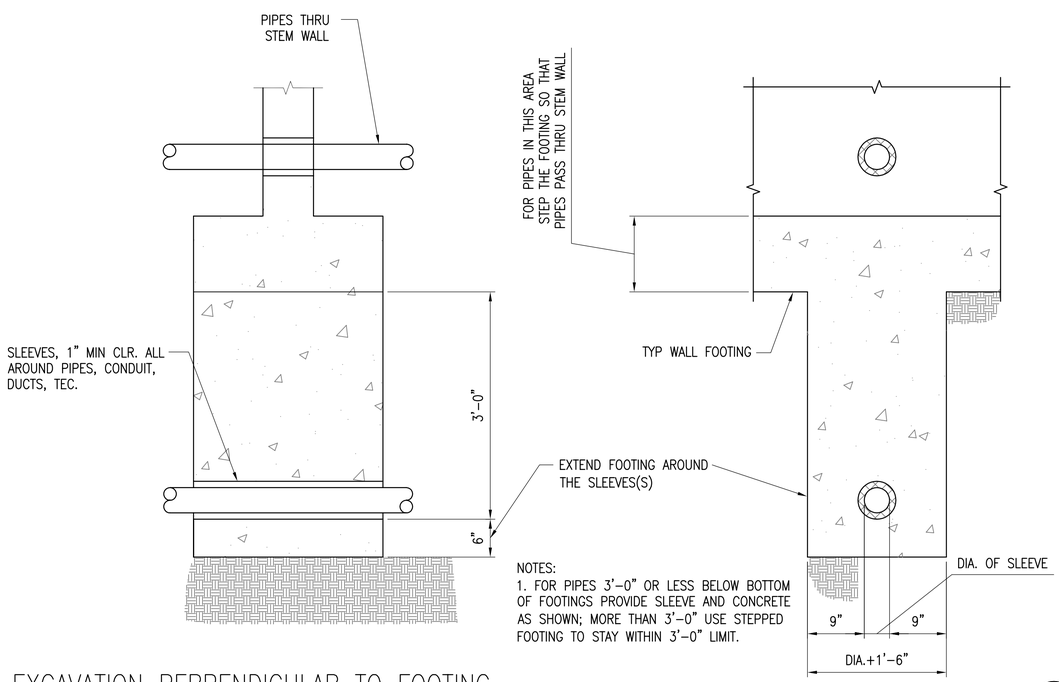

NOTES:
1. FOR PIPES 3'-0" OR LESS BELOW BOTTOM OF FOOTINGS PROVIDE SLEEVE AND CONCRETE AS SHOWN; MORE THAN 3'-0" USE STEPPED FOOTING TO STAY WITHIN 3'-0" LIMIT.

EXCAVATION PERPENDICULAR TO FOOTING

SCALE: 1"=1'-0"

6 / TYP. S-503

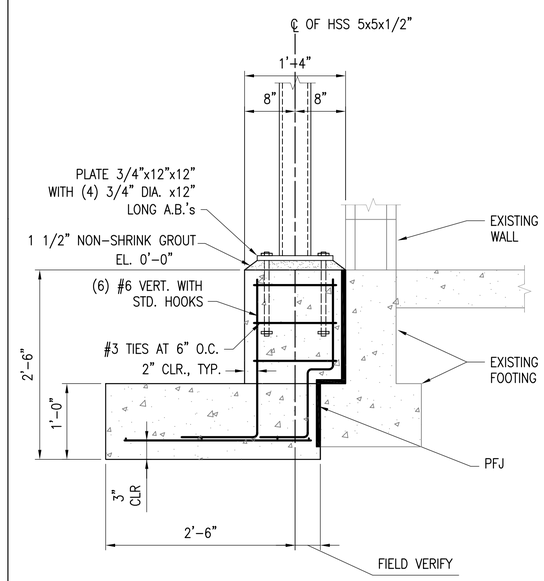

RIDGE COL FTG DETAIL AT MECH. YARD

SCALE: 1"=1'-0"

7 / S-104, S-104A / S-503

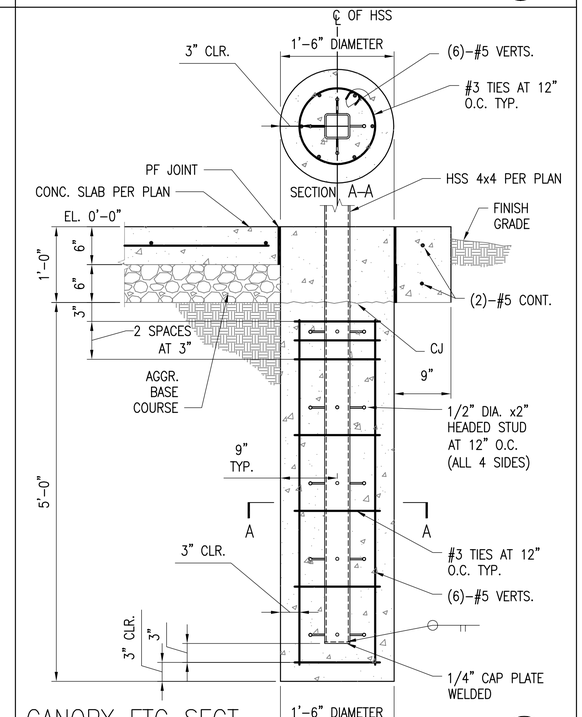

CANOPY FTG SECT

SCALE: 1"=1'-0"

8 / S-103, S-103A / S-503

US Army Corps of Engineers
Sacramento District

Symbol	Description	Date	Approved

Rev.

Date: 10/21/05
Design File no: 229-25-539
Drawing Code:
File name: N39C-S0300K.dwg
Plot date: 10/06/05, 10:44:45
Dwg scale: AS_NOTED

Designed by: N. Grossorth, C. Van Dyke
Dwn by: JC
Spec No.: 1304
Reviewed by: J. Pantagos
Approved by: Jeff R. Norris
Chief, Struct. Des. Sec.

DEPARTMENT OF THE ARMY
CORPS OF ENGINEERS
SACRAMENTO, CALIFORNIA

SACRAMENTO DISTRICT
IN-HOUSE DESIGN
1325 J STREET
SACRAMENTO, CA 95814-2922

NEVADA

NELLIS AFB

F/A-22 ADD/ALTER WEAPONS SCHOOL

TYPICAL FOOTING AND COLUMN BASE DETAILS

Sheet reference number:
S-503

Border Revised 03/01/04, CODENT02.DWG

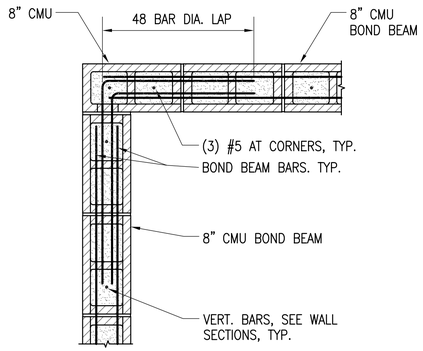

NOTE:

ALL EXTERIOR CMU SHALL BE OPEN ENDED BLOCKS

TYP. 8" CMU CORNER REINFORCEMENT

SCALE: 1"=1'-0"

TYP. 1 S-504

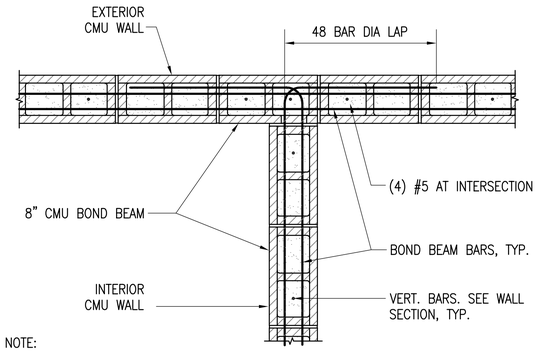

NOTE:

ALL EXTERIOR CMU SHALL BE OPEN ENDED BLOCKS

TYP. 8' CMU INTERSECTION REINFORCEMENT

SCALE: 1"=1'-0"

TYP. 2 S-504

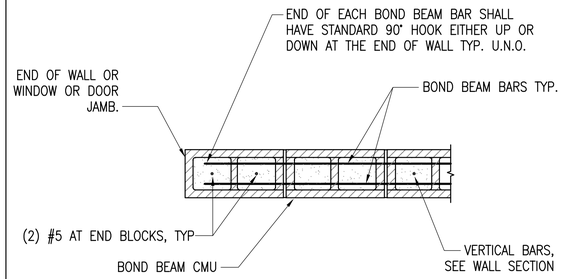

NOTE:

ALL EXTERIOR CMU SHALL BE OPEN ENDED BLOCKS

TYP. 8" CMU REINF. AT END DETAIL

SCALE: 1"=1'-0"

TYP. 3 S-504

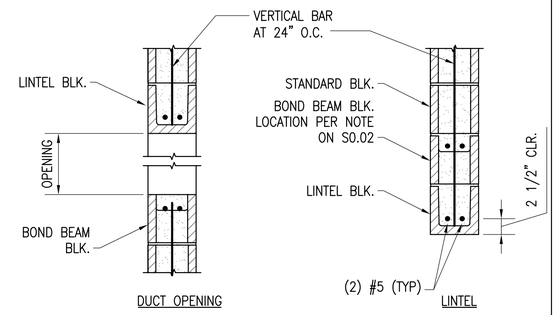

NOTE:

EXTEND ALL HORIZONTAL BARS A MIN. OF 48 BAR DIA. BEYOND MASONRY OPENING.

TYP. 8" CMU LINTEL

SCALE: 1"=1'-0"

TYP. 4 S-504

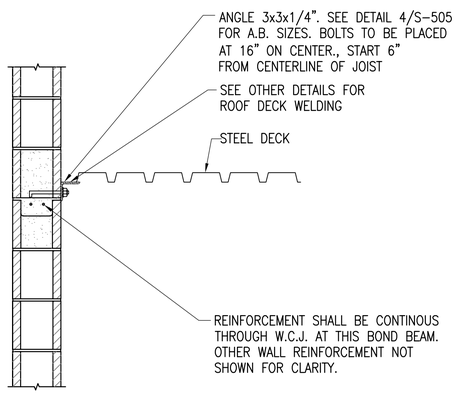

TYP. ROOF LEDGER BETWEEN OWJ

SCALE: 1"=1'-0"

TYP. 5 S-504

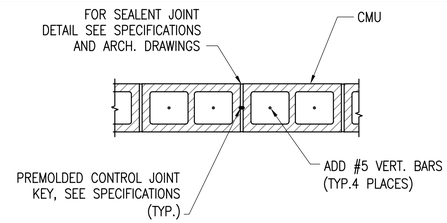

EXTERIOR WALL

NOTE

BOND BEAM REINFORCEMENT AT OR NEAREST TO SECOND FLOOR AND ROOF DIAPHRAMS SHALL BE CONTINUOUS THROUGH JOINT.

NOTE: USE SIM. DETAIL FOR 12" CUM WALL.

TYP. 8" CMU WALL CONTROL JOINTS

SCALE: 1"=1'-0"

TYP. 6 S-504

NOTES

1. GROUT CMU WALL SOLID
2. FOR ① OPENINGS, (1) #5 BARS
   FOR ② OPENINGS, (2) #5 BARS
   FOR ③ OPENINGS, (2) #5 BARS
3. BOND BEAM REINFORCEMENT NOT SHOWN FOR CLARITY.
4. USE LINTEL BLOCKS OVER ALL OPENINGS > 24" WIDE.

TYPE CMU OPENINGS:

① BOTH EDGES 2'-0" OR LESS
② EITHER EDGES EXCEED 2'-0" BUT LESS THAN 4'-0"
③ EITHER EDGE EXCEEDS 4'-0" OR EQUALS 8'-0"

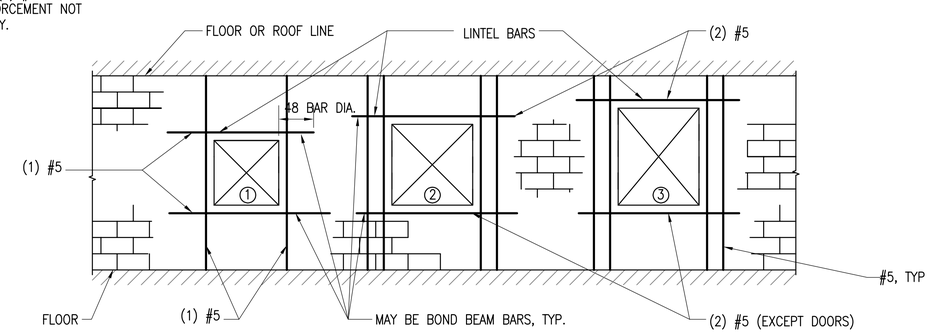

TYP. 8" CMU OPENING REINFORCEMENT

SCALE: NOT TO SCALE

TYP. 7 S-504

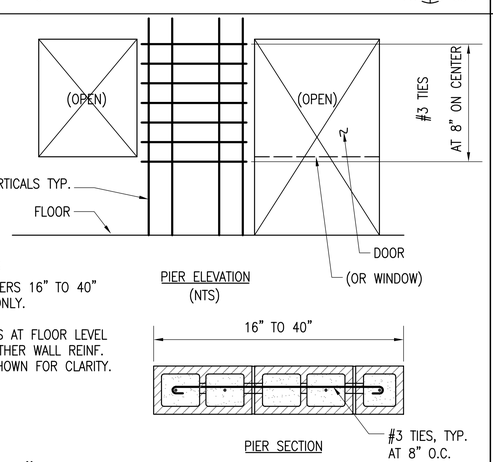

NOTES:

1. FOR PIERS 16" TO 40" WIDE ONLY.
2. DOWELS AT FLOOR LEVEL AND OTHER WALL REINF. NOT SHOWN FOR CLARITY.

TYP. 8" CMU PIER REINFORCEMENT

SCALE: 1"=1'-0"

TYP. 8 S-504

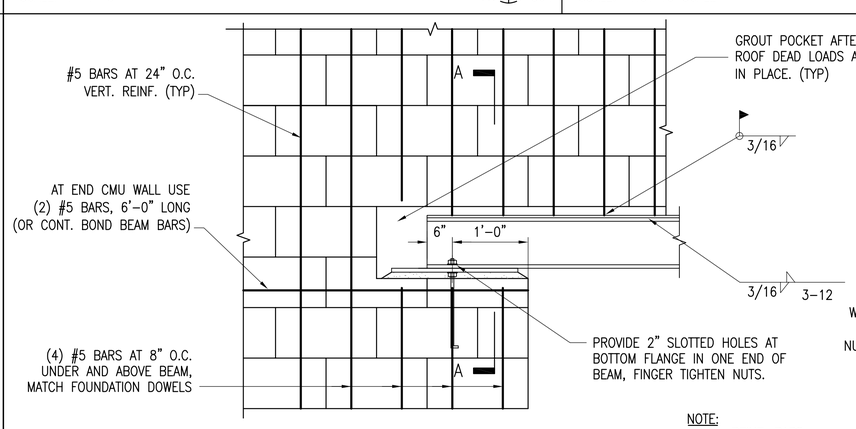

NOTE:
HORIZ. REINF. BARS NOT SHOWN FOR CLARITY

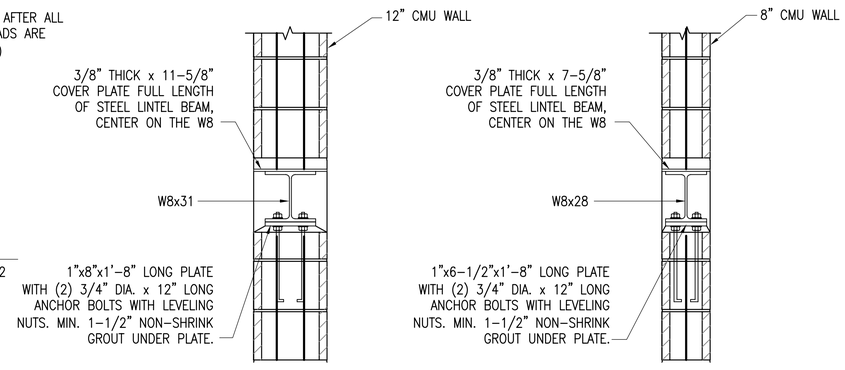

SECTION A-A

TYP. STEEL LINTEL BEAM CONNECTION DETAIL

SCALE: 1"=1'-0"

TYP. 5 S-504

US Army Corps of Engineers
Sacramento District

Symbol	Description	Date	Approved

Designed by: N. Grossorth, C. Van Dyke
Dwn by: JC
Ckd by:
Reviewed by: J. Pantegos
Approved by: Col. R. Norris
Chief, Struct. Des. Sec.
Date: 10/21/05
Design File no: 229-25-539
Drawing Code:
Rev.
Spec No.: 1304
File name: N305-S0400C.dwg
Plot date: 10/06/05, 10:50:37
Dwg scale: AS_NOTED

DEPARTMENT OF THE ARMY
CORPS OF ENGINEERS
SACRAMENTO, CALIFORNIA

SACRAMENTO DISTRICT
IN-HOUSE DESIGN
1325 J STREET
SACRAMENTO, CA 95814-2922

NEVADA
NELLIS AFB
F/A-22 ADD/ALTER WEAPONS SCHOOL
TYPICAL 8" CONCRETE MASONRY UNITS (CMU) DETAILS

Sheet reference number:
S-504

Border Revised 03/01/04, CODSHT02.DWG

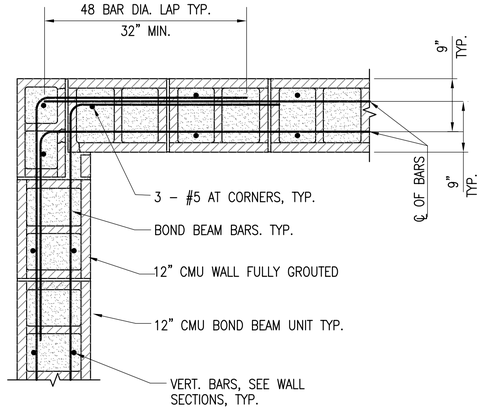

TYP. 12" CMU CORNER REINFORCEMENT

SCALE: 1"=1'-0"

TYP. 1 S-505

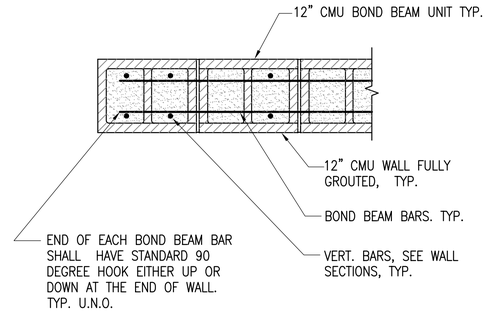

TYP. 12" CMU REINF. AT END DETAIL

SCALE: 1"=1'-0"

TYP. 2 S-505

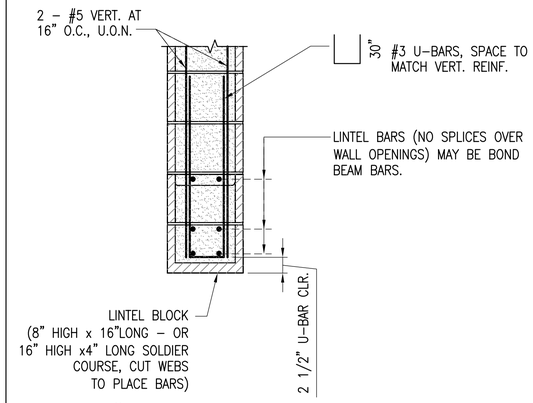

TYP. 12" CMU LINTEL

SCALE: 1"=1'-0"

TYP. 3 S-505

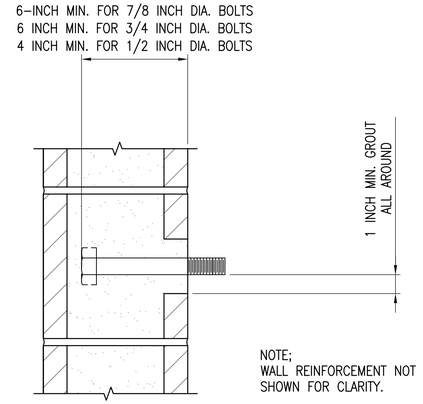

TYP. ANCHOR BOLT DETAIL

SCALE: 1"=1'-0"

TYP. 4 S-505

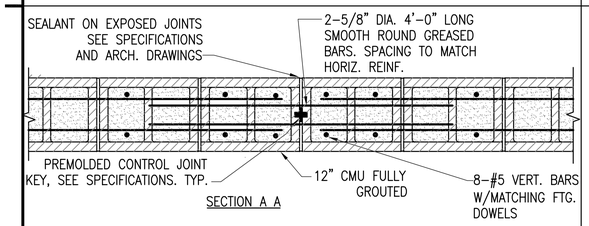

SECTION A A

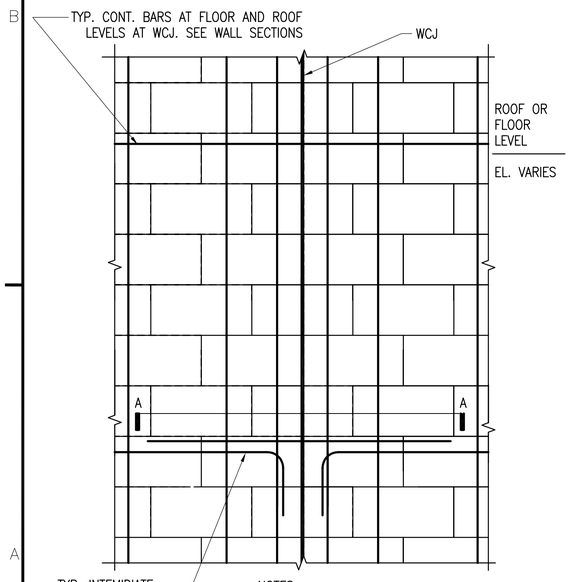

NOTES:
1. BOND BEAM REINFORCEMENT AT OR NEAREST TO FLOORS AND ROOF DIAPHRAMS SHALL BE CONTINUOUS THROUGH JOINT.
2. DO NOT SPLICE CONT. BARS WITHIN 4'-0" OF WCJ JOINT.

ELEVATION

TYP. 12" CMU WALL CONTROL JOINT (WCJ)

SCALE: 1"=1'-0"

TYP. 5 S-505

NOTES
1. GROUT CMU WALL SOLID
2. FOR ① OPENINGS, 2-#5 BARS
   FOR ② OPENINGS, 4-#5 BARS
   FOR ③ OPENINGS, 6-#5 BARS
3. BOND BEAM AND VERT. REINFORCEMENT NOT SHOWN FOR CLARITY.
4. USE LINTEL BLOCKS OVER ALL OPENINGS > 24" WIDE.
5. OPENINGS ① ② ③ MAY ALSO BE WINDOW, DOOR, DUCT OR LOUVER OPENINGS
6. TOP AND BOTTOM BARS SHALL NOT BE SPLICED

TYPE CMU OPENINGS:

① WIDTH 3'-4" OR LESS
② WIDTH EXCEED 3'-4" UP TO 5'-4"
③ WIDTH EXCEEDS 5'-4" OR EQUALS 12'-0"

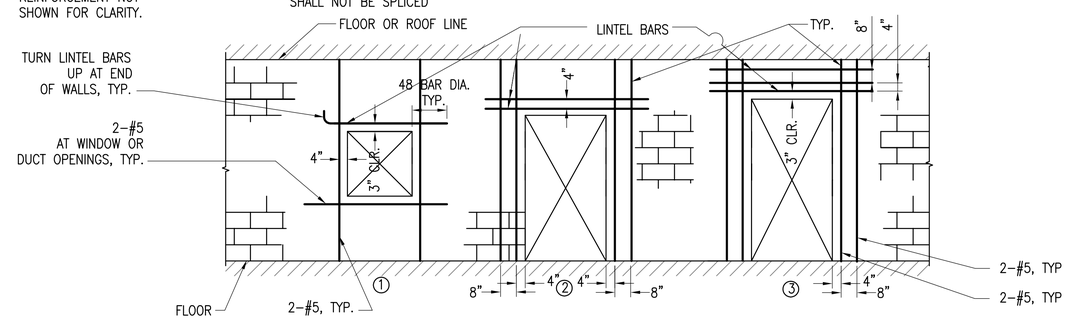

TYP. 12" CMU OPENING REINFORCEMENT

SCALE: NOT TO SCALE

TYP. 6 S-505

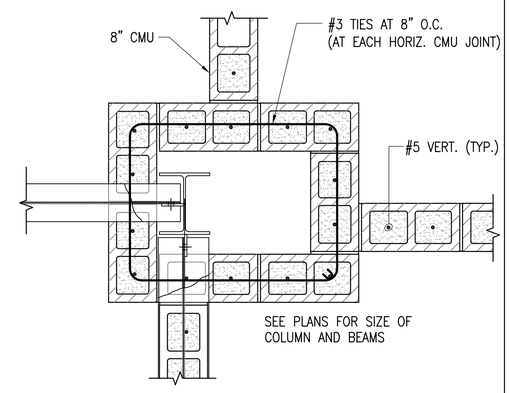

TYP. BEAM TO COLUMN CONNECTION AT VESTIBULE

SCALE: 1"=1'-0"

TYP. 7 S-505

US Army Corps of Engineers
Sacramento District

Symbol	Description	Date	Approved

Designed by: N. Grossarth, C. Van Dyke
Date: 10/21/05
Rev.
Dwn by: JC
Spec No.: 1304
Design File no.: 229-25-539
Drawing Code:
Reviewed by: J. Pentagoe, C. Hoffman, J. R. Nunley
File name: N39C-S0505K.dwg
Plot date: 09/30/05, 10:33:28
Dwg scale: AS_NOTED
Chief, Struct. Des. Sec.

DEPARTMENT OF THE ARMY
CORPS OF ENGINEERS
SACRAMENTO, CALIFORNIA

SACRAMENTO DISTRICT
IN-HOUSE DESIGN
1325 J STREET
SACRAMENTO, CA 95814-2922

NELLIS AFB NEVADA

F/A-22 ADD/ALTER WEAPONS SCHOOL

TYPICAL 12" CONCRETE MASONRY UNITS (CMU) DETAILS

Sheet reference number:
S-505

Border: Revised 03/01/04, CEDSKPD2.DWG

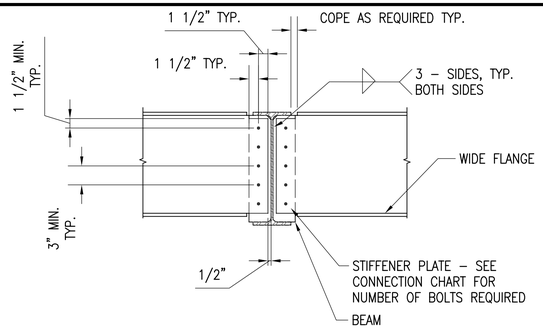

NOTE;
1. CONNECTIONS SHOWN ARE TYP. UNLESS SPECIFICALLY DETAILED OTHERWISE.

2. WHERE DEPTH OF CONNECTED BEAM AND SUPPORTING BEAM DIFFER BY 9" OR MORE, SHEAR PLATE MAY BE TERMINATED A DISTANCE OF 2" BELOW THE LOWEST BOLT.

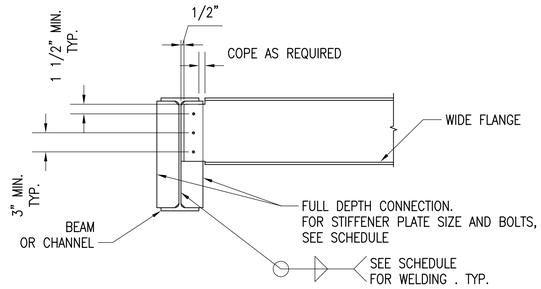

NOTE;
USE THIS DETAIL AND CONNECTIONS AT WHICH THERE IS NO CONNECTION ON OPPOSITE SIDE OF THE BEAM WITHIN A DISTANCE OF 3 FEET.

TYP. SIMPLE BEAM CONN. TO WF DETAILS AND SCHEDULE

SCALE: NONE

CONNECTION SCHEDULE

BEAM SIZE (CHANNEL SIZE SIMILAR)	BEAM TO BEAM AND BEAM TO COLUMN CONNECTION				REMARKS
	PLATE THICKNESS	FILLET WELD	NO. OF BOLTS IN ONE VERT. ROW	A325–N BOLT DIA.	
W8 TO W10	3/8"	5/16"	2	3/4" DIA.	
C12, W12 TO W14	3/8"	5/16"	3	7/8" DIA.	
W16	3/8"	5/16"	4	7/8" DIA.	
W18	3/8"	5/16"	5	7/8" DIA.	
W21	3/8"	5/16"	6	7/8" DIA.	
W24 TO W27	1/2"	5/16"	7	7/8" DIA.	
W30	5/8"	3/8"	8	1" DIA.	
W36	5/8"	3/8"	9	1" DIA.	

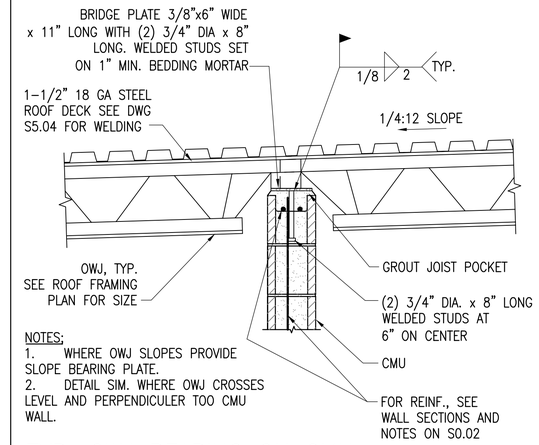

NOTES;
1. WHERE OWJ SLOPES PROVIDE SLOPE BEARING PLATE.
2. DETAIL SIM. WHERE OWJ CROSSES LEVEL AND PERPENDICULER TOO CMU WALL.

TYP. OWJ BEARING ON CMU

SCALE: 1"=1'–0"

TYP. 2/S–506

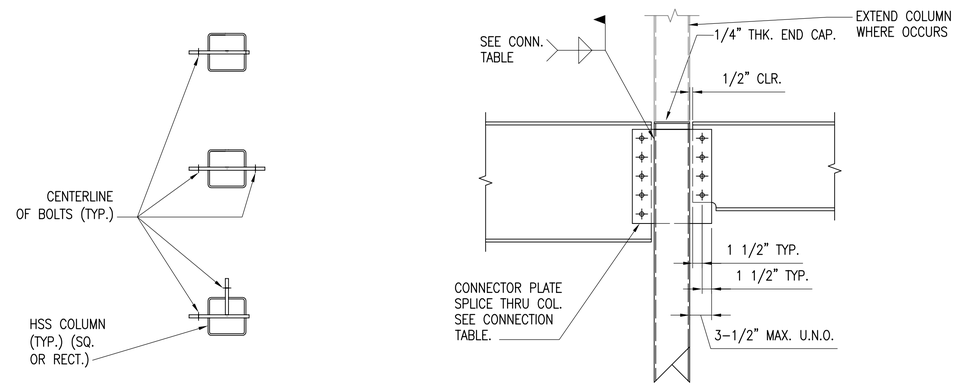

PLAN – HSS COLUMN

ELEVATON – HSS COLUMN

NOTES:

1. SIZE THE CONNECTOR PLATES TO PROVIDE A MINIMUM OF 1 1/2" EDGE DISTANCES AND 3" BOLT PITCH, TYPICAL.
2. ALL STIFFENER PLATES AND CONNECTOR PLATES/ANGLES SHALL HAVE A MINIMUM THICKNESS OF 3/8", BUT NOT LESS THAN THE THICKNESS OF STIFFENED OR CONNECTED MEMBER ELEMENT(S). TYPICAL UON.
3. NUMBER OF BOLTS SHOWN ON TYP. DETAILS ARE FOR BOLT SCHEDULE CONFIGURATION OF THE CONNECTION ONLY. SEE CONNECTION TABLE FOR NUMBER OF BOLTS, PLATE AND WELDING REQUIREMENTS.
4. PROVIDE WELDS ON BOTH SIDES OF PLATE.
5. ALL CONNECTIONS ARE PER AISC SPEC'S.

TYP. BEAM TO COLUMN CONNECTION DETAILS AND SCHEDULE

SCALE: NONE

TYP. 1/S–506

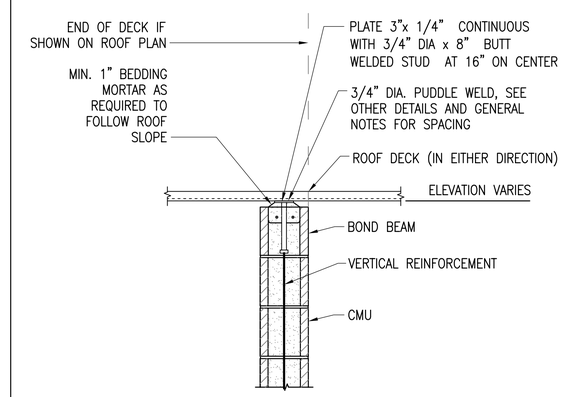

TYP. CMU/ROOF DECK CONNECTION

SCALE: 1"=1'–0"

TYP. 3/S–506

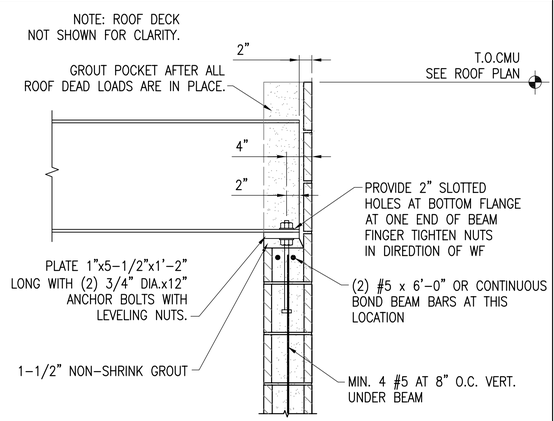

TYP. BEAM SUPPORT AT PERPENDICULAR CMU WALL

SCALE: 1"=1'–0"

TYP. 4/S–506

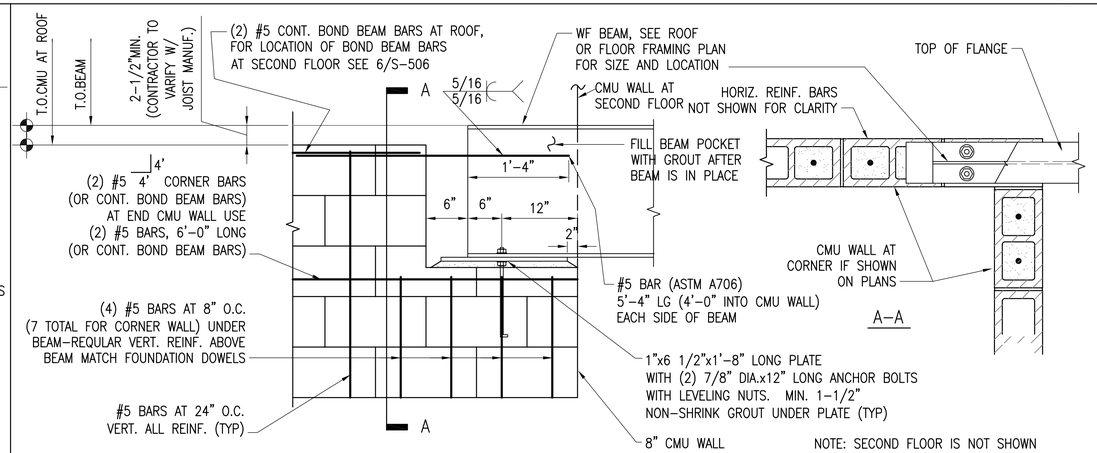

NOTE: SECOND FLOOR IS NOT SHOWN ON TOP OF FLOOR BEAM FOR CLARITY

TYP. BEAM IN LINE WITH CMU WALL (AT CORNER, SIM.)

SCALE: 1"=1'–0"

TYP. 5/S–506

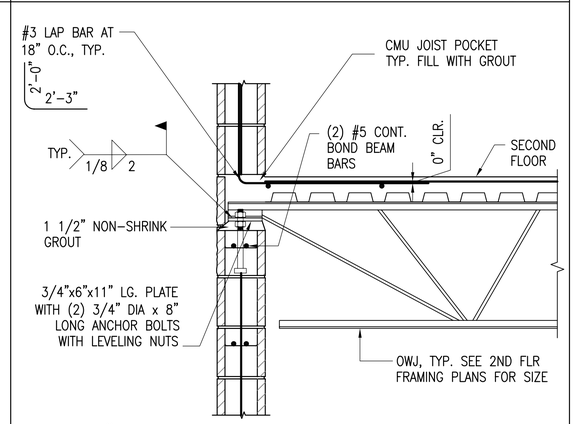

TYP. 8" CMU WALL JOIST SEAT AT SECOND FLR.

SCALE: 1"=1'–0"

TYP. 6/S–506

US Army Corps of Engineers
Sacramento District

Symbol	Description	Date	Approved

Designed by: N. Grossarth, C. Van Dyke
Dwn by: JC
Ckd by: C. Van Dyke
Spec No.: 1304
Date: 10/21/05
Design File no: 229–25–539
Drawing Code:
Rev.
Reviewed by: J. Pantages
Approved by: S. Rodriguez
Chief, Struct. Des. Sec.
File name: N39C–S0800C.dwg
Plot date: 09/27/05, 15:03:59
Dwg scale: AS_NOTED

DEPARTMENT OF THE ARMY
CORPS OF ENGINEERS
SACRAMENTO, CALIFORNIA

SACRAMENTO DISTRICT
IN–HOUSE DESIGN
1325 J STREET
SACRAMENTO, CA 95814–2922

NEVADA

F/A–22 ADD/ALTER WEAPONS SCHOOL

NELLIS AFB

TYPICAL STEEL COLUMN AND CMU WALL CONNECTION DETAILS

Sheet reference number:
S–506

Border Revised 03/01/04, CODEHATCH.DWG

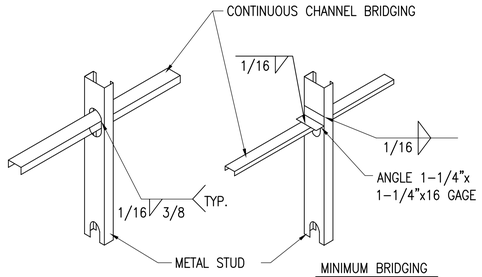

MINIMUM BRIDGING

1. WALLS < 10'-0": 2 ROWS EQUAL SPACED
WALLS > 10'-0": 3'-4" ON CENTER MAXIMUM.

2. USE SAME BRIDGING FOR EXTERIOR STEEL STUD WALLS.

TYP. METAL STUD BRACING

SCALE: NONE

1 TYP. S-507

ATTACHMENT OF BOTTOM TRACKS:

1. TRACK FOR PARTITIONS RESTING ON CONCRETE SLAB SHALL BE ANCHORED WITH POWER DRIVEN THREADED STUDS (RAMSET 2431 1/4"ø OR EQ.) 6" MAX. FROM END OF EA. PIECE AND @ 32" O.C., U.N.O.

2. FOR TRACKS AT EXTERIOR STEEL STUD WALLS, SEE WALL SECTIONS.

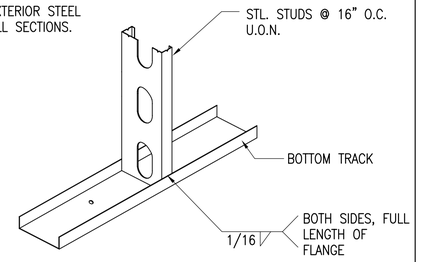

TYP. METAL STUD TRACK

SCALE: NONE

2 TYP. S-507

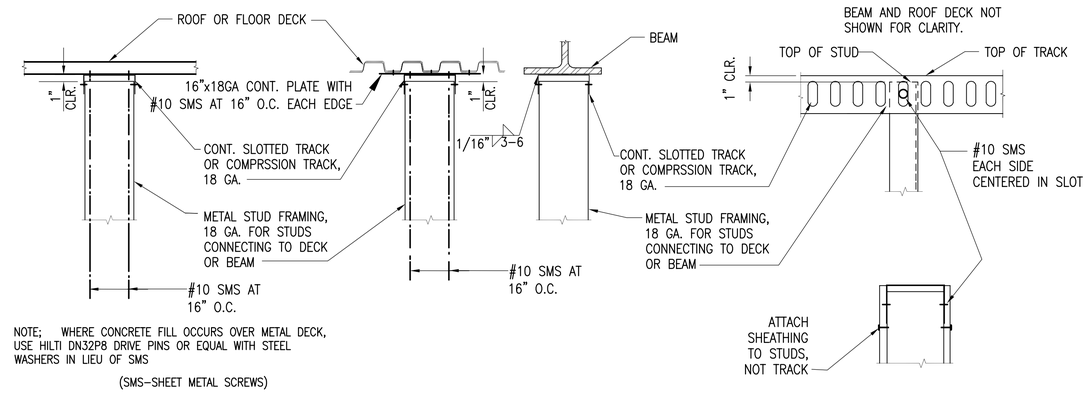

NOTE; WHERE CONCRETE FILL OCCURS OVER METAL DECK, USE HILTI DN32P8 DRIVE PINS OR EQUAL WITH STEEL WASHERS IN LIEU OF SMS

(SMS-SHEET METAL SCREWS)

PERPENDICULAR PARALLEL ENLARGED DETAIL

TYPICAL STUD WALL TO DECK OR BEAM CONNECTION

SCALE: NONE

3 TYP. S-507

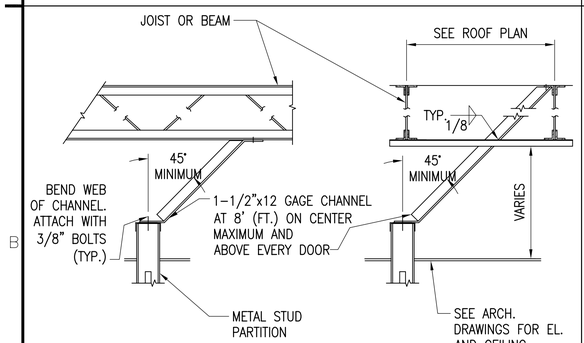

PERPENDICULAR TO JOIST PARALLEL TO JOIST

TYP. LATERAL SUPPORT OF STUD PARATITION

SCALE: 1"=1'-0"

4 TYP. S-507

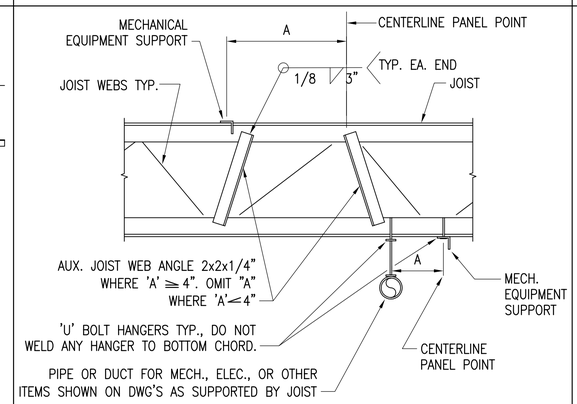

DO NOT SUSPEND UTILITIES OR CEILING FROM ROOF DECK OR BRIDGING.

TYP. OWJ AUX. MEMBER AND HANGER

SCALE: 1"=1'-0"

5 TYP. S-507

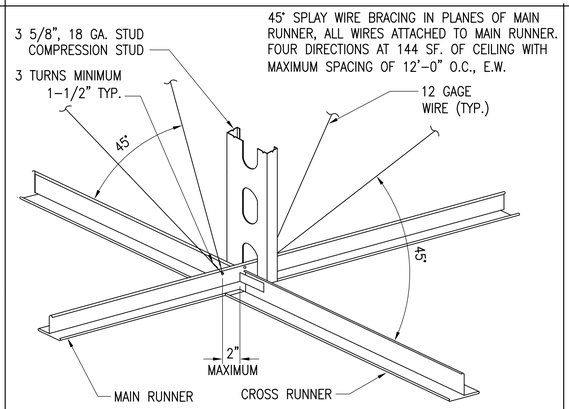

TYP. SUSPENDED CEILING SPLAY BRACING

SCALE: 1"=1'-0"

6 TYP. S-507

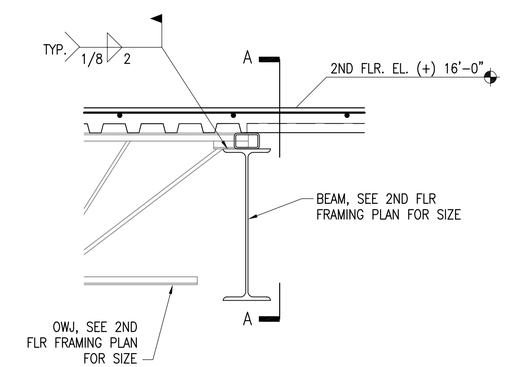

ELEVATION

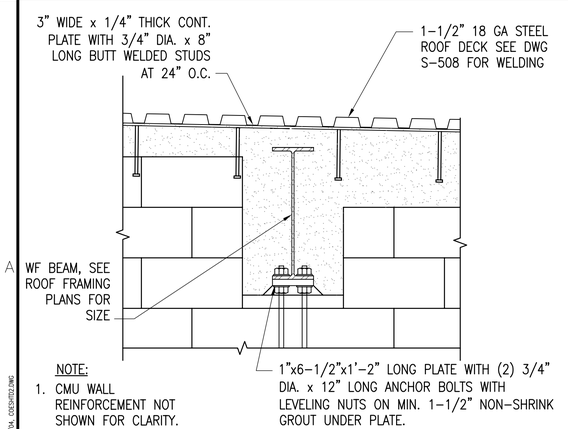

NOTE:

1. CMU WALL REINFORCEMENT NOT SHOWN FOR CLARITY.

TYP. BEAM SUPPORT ON CMU WALL

SCALE: 1"=1'-0"

8 TYP. S-507

NOTES:

1. AT ROOF, PROVIDE 1/2" COL. CAP, PL SAME EL. AS BEAMS. USE ALL AROUND 5/16" FILLET WELD
2. SEE ROOF PLAN FOR SLOPE AT ROOF BEAMS

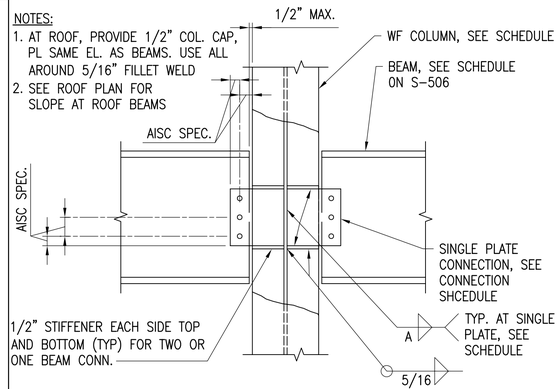

TYP. BEAM TO COLUMN SHEAR CONN. AT WEB

SCALE: NODE

9 TYP. S-507

NOTES:

1. AT ROOF, PROVIDE 1/2" COLUMN CAP PLATE SAME EL. AS BEAMS. USE ALL AROUND 5/16" FILLET WELD.
2. SEE ROOF PLAN FOR SLOPE AT ROOF BEAMS.

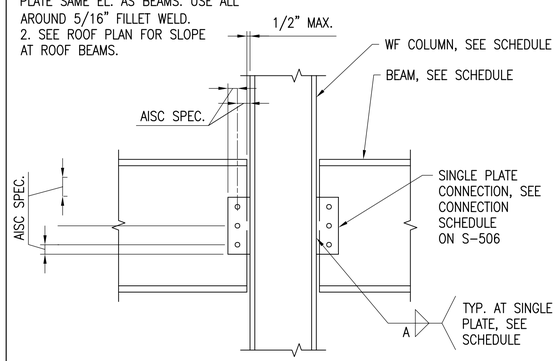

TYP. BEAM TO COLUMN SHEAR CONN. AT FLANGE

SCALE: NODE

10 TYP. S-507

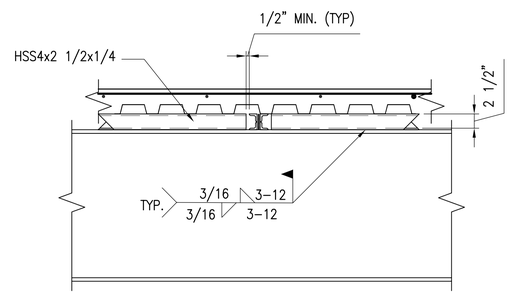

SECTION A-A

TYP. OWJ SEATED ON A BEAM/GIRDER

SCALE: 1"=1'-0"

7 TYP. S-507

Border Revised 03/01/04, CCDSHT02.DWG

US Army Corps of Engineers
Sacramento District

Symbol	Description	Date	Approved

Designed by: N. Grossarth, C. Van Dyke
Date: 10/21/05
Rev.
Dwn by: JC
Spec. No.: 1304
Design File no: 229-25-539
Drawing Code:
Reviewed by: J. Portegys
Submitted by: Ed R. Nerio
File name: N305-S07XXX.dwg
Plot date: 10/06/05, 10:40:44
Dwg scale: AS_NOTED

DEPARTMENT OF THE ARMY
CORPS OF ENGINEERS
SACRAMENTO, CALIFORNIA

SACRAMENTO DISTRICT
IN-HOUSE DESIGN
1325 J STREET
SACRAMENTO, CA 95814-2922

NEVADA

NELLIS AFB

F/A-22 ADD/ALTER WEAPONS SCHOOL

TYPICAL COLD-FORMED DETAILS AND MISCELLANEOUS FRAMING DETAILS

Sheet reference number:

S-507

STEEL DECK PROPERTIES TABLE

TYPE	LOCATION	DECK SIZE (DEPTH x THICK.)	MOMENT OF INERTIA I MIN in ^{4}/ft.	SECTION MODULUS Sp MIN. in ^{3}/ft.	SECTION MODULUS Sn MIN. in ^{3}/ft.	SUPPORT WELDS	MARGINAL WELDS	SIDE SEAM WELDS
1	ALL DECKS	1-1/2" x 18	0.30	0.32	0.33	5 WELDS	1'-0" O.C. MAX SPACING	2'-0" O.C. MAX SPACING

NOTES:
1. ALL DECKS ARE GALVANIZED.
2. SECOND FLOOR DECK IS COMPOSITE TYPE AND VENTED.

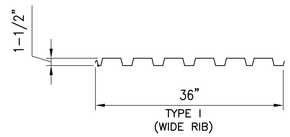

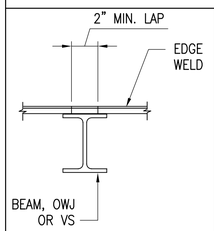

TYP DECK SPLICE

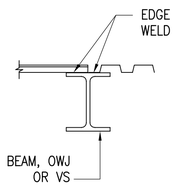

TYP DECK SPLICE

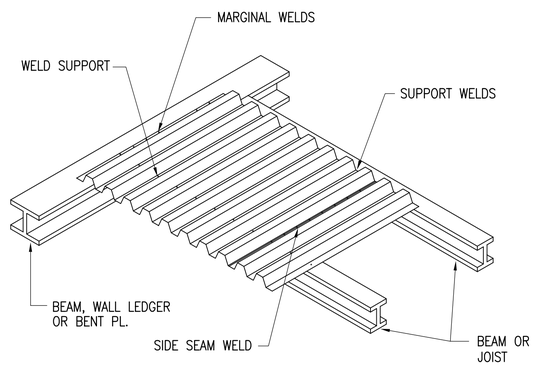

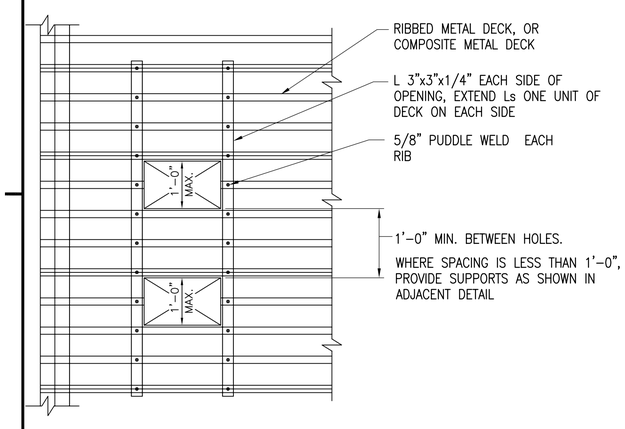

NOTE: NO L's REQUIRED FOR OPENINGS LESS THAN 6" WIDE

NOTE: FRAMING TO BE FURNISHED AND INSTALLED BY MISC. METALS CONTRACTOR

OPENINGS 6" TO 1'-0"

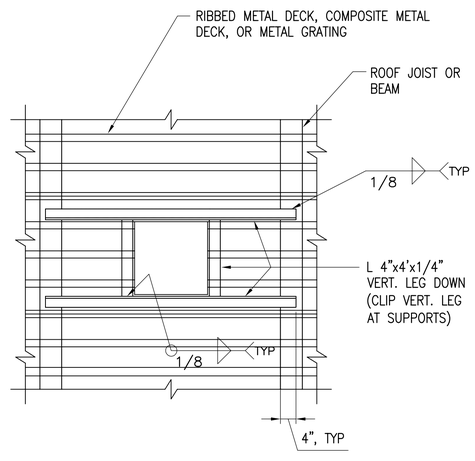

NOTE: FRAMING TO BE FURNISHED AND INSTALLED BY STRUCTURAL STEEL CONTRACTOR

OPENINGS OVER 1'-0"

TYP. DECK OPENINGS

SCALE: NONE

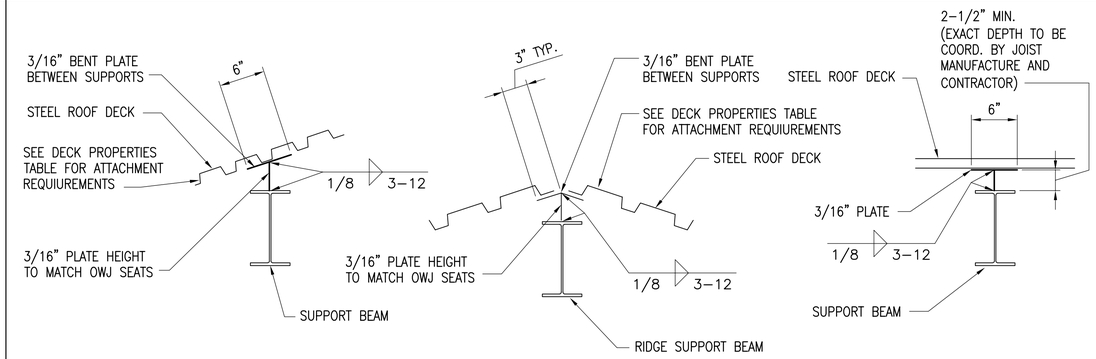

W-SUPPORT W-RIDGE SUPPORT W-SUPPORT

TYP. ROOF DECK SUPPORT AT RIDGE AND SUPPORT BEAMS

SCALE: NONE

STEEL DECK NOTES

1. 5/8 DIA. PUDDLE WELDS FOR: END, INTERMEDIATE AND MARGINAL WELDS.
2. 1-1/2" SIDE-SEAM WELDS.
3. ALL DECKING SHALL BE WIDE RIB.
4. DIFFERENT DECK PANEL WIDTHS MAY BE SUBSTITUTED IF WELDING PATTERNS ARE ADJUSTED TO PROVIDE EQUAL LATERAL SHEAR CAPACITY OF THE DECKING SHOWN, AND IF APPROVED BY THE CONTRACTING OFFICER.
5. DIFFERENT WIDTHS OF DECK PANELS SHALL NOT BE MIXED EXCEPT AS A MAKEUP FOR UNEVEN MULTIPLES OF ROOF WIDTHS.

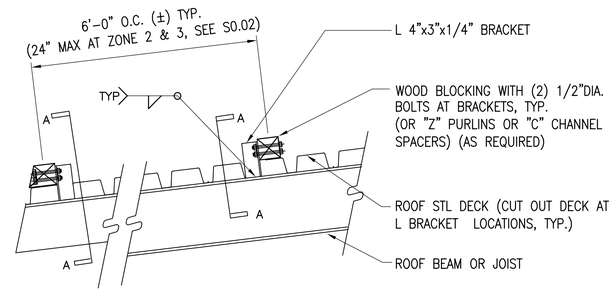

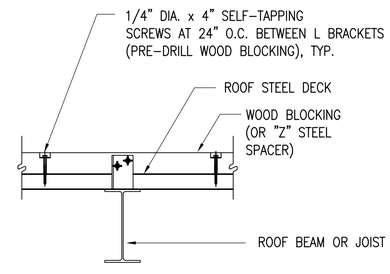

SECTION A-A

TYP. RIDGE OR SUPPORT DECK CONNECTION WITH SUPPORTS

SCALE: NONE

US Army Corps of Engineers
Sacramento District

Symbol	Description	Date	Approved

Designed by: N. Grossorth, C. Van Dyke
Dwn by: JC
Ckd by: C. Van Dyke
Spec No.: 1304
Date: 10/21/05
Design File no: 229-25-539
Drawing Code:
Rev.
Reviewed by: J. Pantagos
Submitted by: Jeffrey R. Hinds
Chief, Struct. Des. Sec.
File name: N395-S08K06.dwg
Plot date: 09/23/05, 11:18:43
Dwg scale: AS_NOTED

DEPARTMENT OF THE ARMY
CORPS OF ENGINEERS
SACRAMENTO, CALIFORNIA

SACRAMENTO DISTRICT
IN-HOUSE DESIGN
1325 J STREET
SACRAMENTO, CA 95814-2922

NEVADA

NELLIS AFB

F/A-22 ADD/ALTER WEAPONS SCHOOL

TYPICAL STEEL DECK DETAILS

Sheet reference number:

S-508

Border Revised 03/01/04, CCESKITCZ.DWG

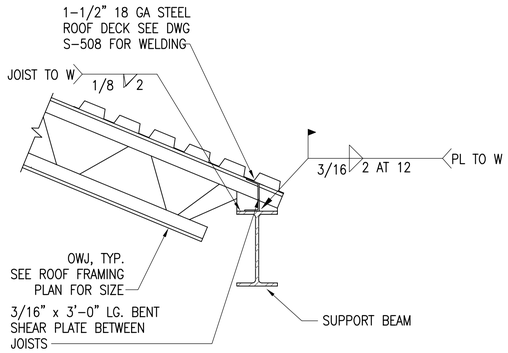

NOTE:

1. COORD. W/JOIST MANUF. EXACT DEPTH OF JOIST SEAT.

TYPICAL JOIST SUPPORT

SCALE: NTS.

1 TYP. S-509

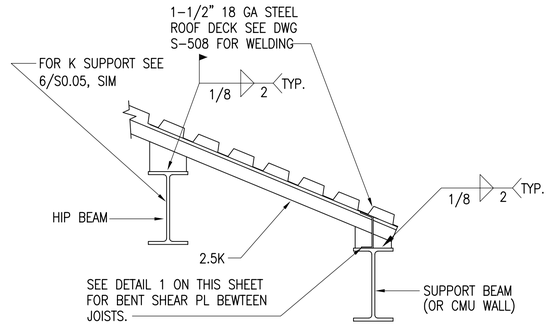

TYPICAL 2.5 K SUPPORT

SCALE: NTS.

2 TYP. S-509

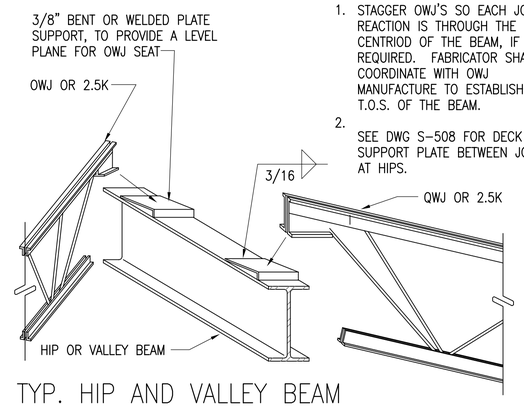

NOTES:

1. STAGGER OWJ'S SO EACH JOIST REACTION IS THROUGH THE CENTRIOD OF THE BEAM, IF REQUIRED. FABRICATOR SHALL COORDINATE WITH OWJ MANUFACTURE TO ESTABLISH T.O.S. OF THE BEAM.
2. SEE DWG S-508 FOR DECK SUPPORT PLATE BETWEEN JOIST AT HIPS.

TYP. HIP AND VALLEY BEAM TO OWJ SUPPORT DETAIL

SCALE: NTS.

3 TYP. S-509

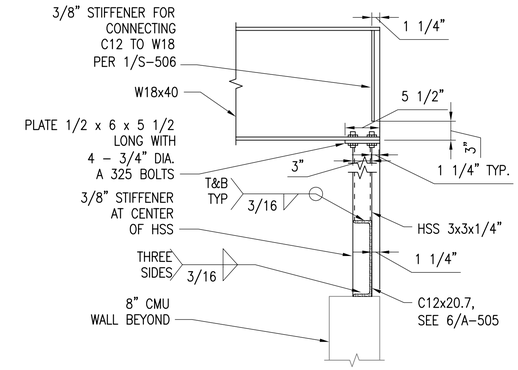

TYP. RIDGE CONNECTION AT MECH YARD

SCALE: 1 1/2 "=1'-0"

5 S-110 S-509

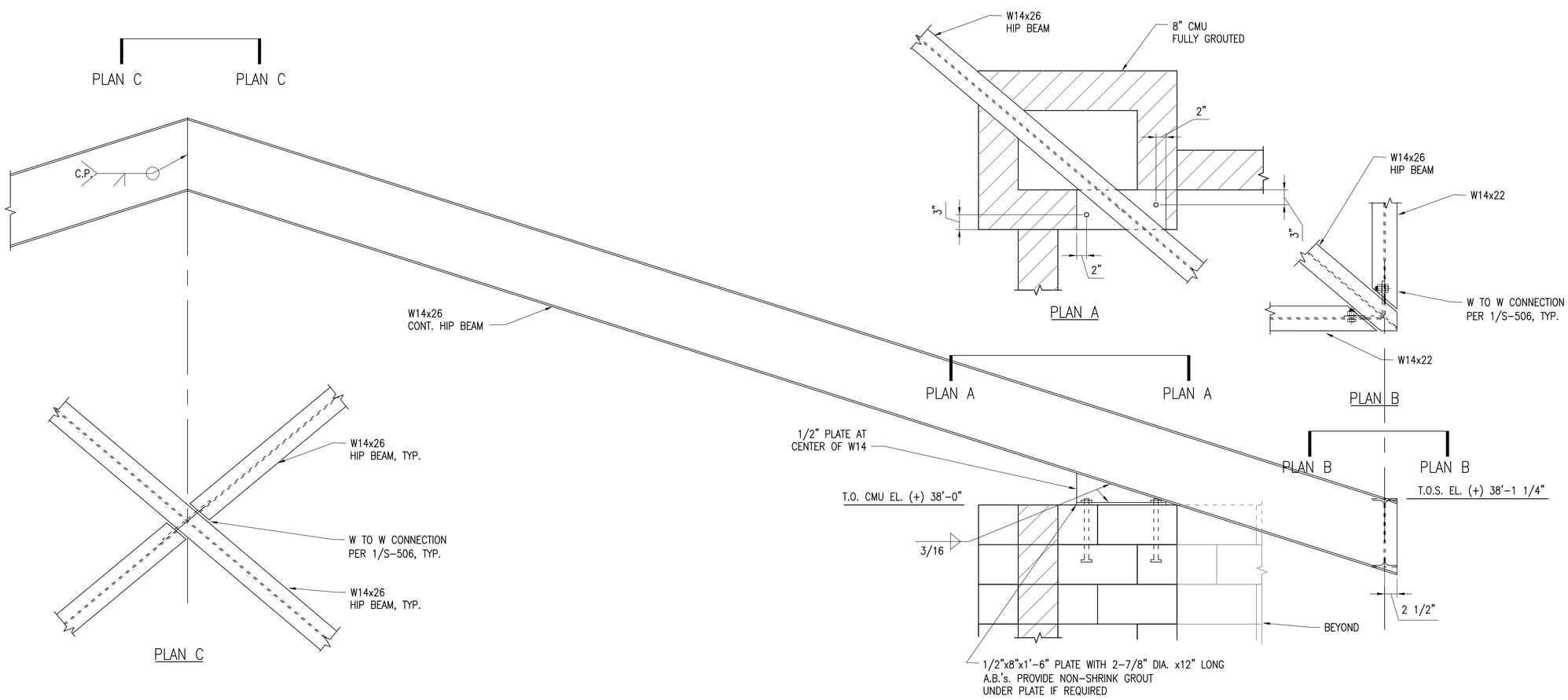

CONTINUOUS HIP BEAM ELEVATION AT TOWER

SCALE: 1 1/2 "=1'-0"

4 S-109 S-509

US Army Corps of Engineers
Sacramento District

Symbol	Description	Date	Approved

Designed by: N. Grossarth
Dwn by: BF
Spec No.: 1304
Date: 10/21/05
Design File no: 229-25-539
Drawing Code:
Rev.
Reviewed by: J. Pantagos
Submitted by: /s/ B. Burns Chief, Struct. Des. Sec.
File name: N39C-S0900C.dwg
Plot date: 10/05/05, 11:00:41
Dwg scale: AS_NOTED

DEPARTMENT OF THE ARMY
CORPS OF ENGINEERS
SACRAMENTO, CALIFORNIA

SACRAMENTO DISTRICT
IN-HOUSE DESIGN
1325 J STREET
SACRAMENTO, CA 95814-2922

NEVADA

NELLIS AFB

F/A-22 ADD/ALTER WEAPONS SCHOOL

TYPICAL TOWER ROOF FRAMING DETAILS

Sheet reference number:

S-509

Border Revised 03/01/04, CXESHEET2.DWG

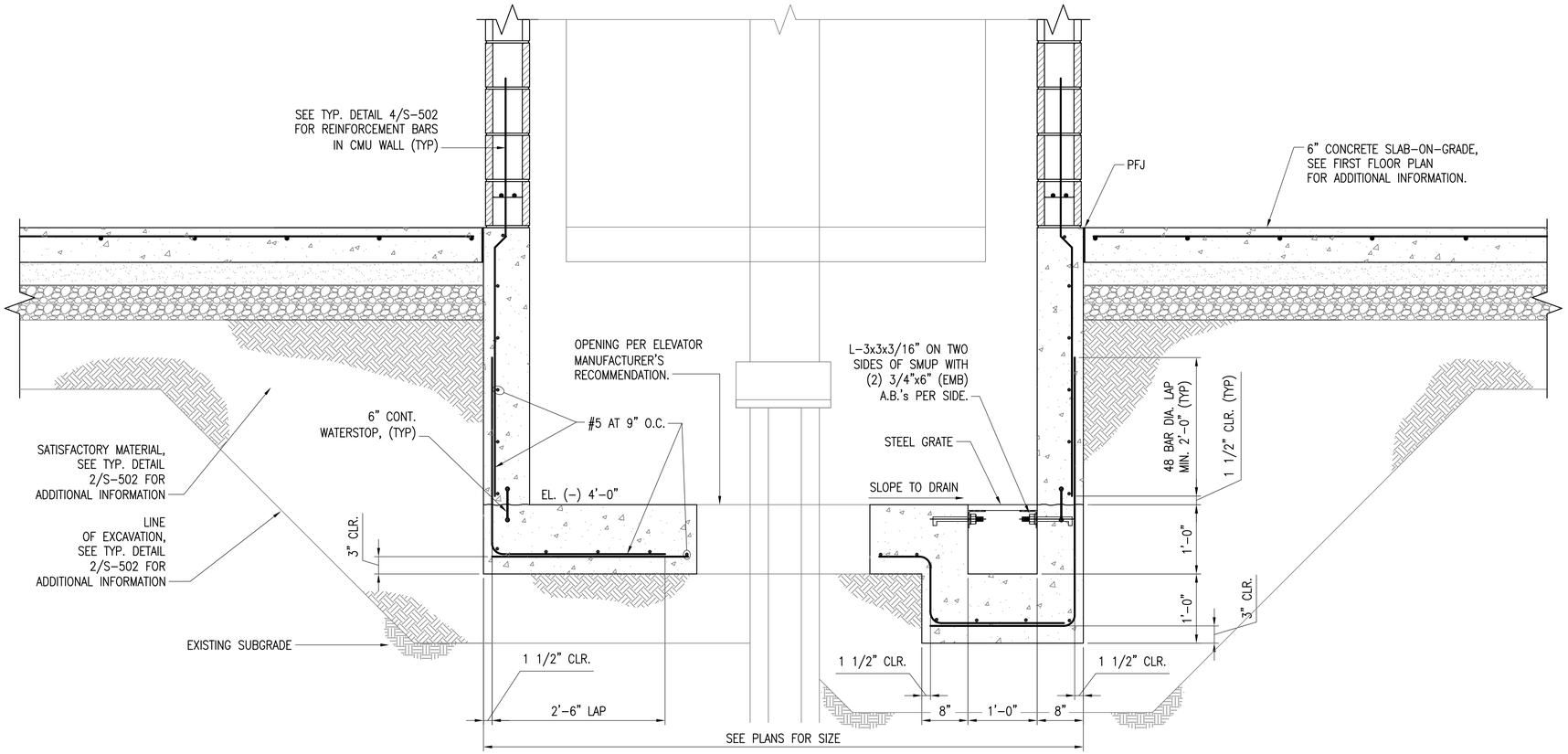

ELEVATOR PIT DETAIL

SCALE: 1 1/2 "=1'-0"

S-103, S-103A, S-104, S-104A 1 S-510

US Army Corps of Engineers
Sacramento District

Symbol	Description	Date	Approved

Designed by: N. Grossarth, C. Van Dyke
Dwn by: CVD
Reviewed by: J. Pentages
Submitted by: Ray R. Rivas
Chief, Struct. Des. Sec.
Date: 10/21/05
Rev.:
Spec. No.: 1304
Design File no: 229-25-539
Drawing Code:
File name: N39C-S1000C.dwg
Plot date: 10/05/05, 11:00:34
Dwg scale: AS_NOTED

DEPARTMENT OF THE ARMY
CORPS OF ENGINEERS
SACRAMENTO, CALIFORNIA

SACRAMENTO DISTRICT
IN-HOUSE DESIGN
1325 J STREET
SACRAMENTO, CA 95814-2922

NEVADA

NELLIS AFB

F/A-22 ADD/ALTER WEAPONS SCHOOL

ELEVATOR PIT DETAIL

Sheet reference number:

S-510

Border Revised 03/01/04, CDESHTC2.DWG

ABBREVIATIONS

A.B.	ANCHOR BOLT
AC	ACOUSTICAL
ADDL.	ADDITIONAL
A.F.F.	ABOVE FINISH FLOOR
ALUM	ALUMINUM
B.O.	BOTTOM OF
BU, B-U	BUILT UP
BLDG	BUILDING
BRG	BEARING
CHL, CHLS	CHANNEL, CHANNELS
CLG	CEILING
CLOS	CLOSET
CLR	CLEAR
CMU	CONCRETE MASONRY UNIT
CNTRSUNK	COUNTERSUNK
C.O.	CONCRETE OPENING
COL	COLUMN
COMM.	COMMUNICATIONS
COMP	COMPOSITION
CONC	CONCRETE
CONT	CONTINUOUS
CORR.	CORRIDOR
CT	CERAMIC TILE
DBL.	DOUBLE
DET.	DETAIL
DIA.	DIAMETER
DIM.	DIMENSIONS
DS	DOWNSPOUT
DN	DOWN
DWGS	DRAWINGS
EA	EACH
EIFS	EXTERIOR INSULATION & FINISH SYSTEM
EL.	ELEVATION
ELEC	ELECTRICAL
ELEV	ELEVATION
EMERG.	EMERGENCY
EQ	EQUAL
EQUIP	EQUIPMENT
EXIST	EXISTING
EXP	EXPANSION
EW	EACH WAY
EWC	ELECTRIC WATER COOLER
F.H.	FLAT HEAD
F.H.W.S.	FLAT HEAD WOOD SCREW
FD	FLOOR DRAIN
FEC	FIRE EXTINGUISHER CABINET
FF, FFL.	FINISHED FLOOR
FIN	FINISHED
FLASH	FLASHING
FLR	FLOOR
FOC	FACE OF CONCRETE
FOM	FACE OF MASONRY
FOS	FACE OF STEEL OR STUD
FTG	FOOTING
GA	GAGE
GALV.	GALVANIZED
GFCI	GROUND FAULT INTERRUPT CIRCUIT
GFGI	GOV'T FURNISHED GOV'T INSTALLED
GYP. BD., GWB	GYPSUM WALL BOARD
HDWD	HARDWOOD
HGHT	HEIGHT
H.M.	HOLLOW METAL
HVAC	HEATING, VENTILATING & AIR CONDITIONING
INSUL	INSULATION
JAN	JANITOR
JT	JOINT
LG	LONG
MAX.	MAXIMUM
M.B.	MACHINE BOLT
MECH	MECHANICAL
MTL.,MET.	METAL
MFR'S	MANUFACTURER'S
MIN	MINIMUM
MISC.	MISCELLANEOUS
M.O.	MASONRY OPENING
N/A	NOT APPLICABLE
NTS	NOT TO SCALE
O.C.	ON CENTER
OPNG	OPENING
OPP HAND	OPPOSITE HAND
PFJ	PERIMETER FELT JOINT
PLYWD	PLYWOOD
QT	QUARRY TILE
R	RADIUS
RDWD	REDWOOD
REHAB	REHABILITATE
REQ'D.	REQUIRED
RES	RESILIENT
RM	ROOM
R'FING	ROOFING
S.A.B.C.	STABILIZED AGGREGATE BASE COURSE
SD	SOAP DISPENSER
SHT	SHEET
SIM	SIMILAR
SND	SANITARY NAPKIN DISPOSER
SPECS	SPECIFICATIONS
SQ	SQUARE
SSTL, S.S.	STAINLESS STEEL
STD	STANDARD
STL	STEEL
STOR	STORAGE
STRUCT	STRUCTURAL
T.O.	TOP OF
TOC, T.O.C.	TOP OF CONCRETE
TOM, T.O.M.	TOP OF MASONRY
TOS, T.O.S.	TOP OF STEEL
T.O.W.	TOP OF WALL
TELE	TELEPHONE
THK.	THICK
TS	TUBE SECTION
TTD	TOILET TISSUE DISPENSER
TYP	TYPICAL
U.O.N.	UNLESS OTHERWISE NOTED
UL	UNDERWRITER'S LABORATORIES
VCT	VINYL COMPOSITION TILE
VCWC	VINYL COATED WALL COVERING
W	WASHER
W/	WITH
W/O	WITHOUT
WD	WOOD
WNDW	WINDOW
WP, W.P.	WORKING POINT
WWF	WELDED WIRE FABRIC
&	AND
<	ANGLE
@	AT
℄	CENTER LINE
ø, DIA	DIAMETER
#, NO	NUMBER
PL	PLATE
ϕ	ROUND

EXTERIOR COLOR SCHEDULE ~ BUILDING 282 ADDITION

SURFACE	MATERIAL	MANUFACTURER	COLOR	REMARKS
WALLS				
MASONRY	SPLIT-FACE, FLUTED & GROUND FACE	RINKER	NELLIS BROWN	
MASONRY	GROUND FACE	RINKER	DARK BROWN	@ RECESSED REVEALS
STUCCO	STUCCO, INTEGRAL COLOR	FRAZEE PAINTS	SPANISH BROWN	@ 2ND FLR OUTDOOR AREA, STREET SIDE
DOORS				
DOOR FRAMES	STEEL	FRAZEE PAINTS	SPANISH BROWN	
LOUVERED DOORS	METAL	FRAZEE PAINTS	SPANISH BROWN	
STEEL PERSONNEL DOORS	STEEL	FRAZEE PAINTS	SPANISH BROWN	
STOREFRONT	ALUMINUM, FACTORY FINISH	KAWNEER	ANODIZED DARK BRONZE	
GLAZING				
FRAMES	ALUMINUM, FACTORY FINISH	KAWNEER	ANODIZED DARK BRONZE	
GLASS	DUAL PANE	PPG	SOLAR BRONZE	
TRANSLUCENT WALL SYSTEM	TRANSLUCENT PANELS	KAL WALL	ROSE	FRAME COLOR TO MATCH STOREFRONT
LOUVERS	EXTRUDED ALUMINUM	FRAZEE PAINTS	SPANISH BROWN	
SOFFITS				
STUCCO	STUCCO, INTEGRAL COLOR	FRAZEE PAINTS	SPANISH BROWN	
LINEAR METAL	ALUMINUM, FACTORY FINISH	FRAZEE PAINTS	SPANISH BROWN	
MISC FERROUS METALS				
GUTTERS	STEEL, FACTORY FINISH	FRAZEE PAINTS	TRAVATAN	SEE NOTE 1
CONDUCTORS & DOWNSPOUTS	STEEL, FACTORY FINISH	FRAZEE PAINTS	SPANISH BROWN	SEE NOTE 1
RAILINGS, GATES, W.W.F.	STEEL	FRAZEE PAINTS	SPANISH BROWN	SEE NOTE 1
MISCELLANEOUS				
EXTERIOR SIGNAGE	ANODIZED ALUMINUM		DARK BRONZE	SEE NOTE 1
PRECASTE CONC. WALL CAP	CONCRETE, INTEGRAL COLOR		MATCH CMU COLOR	SEE NOTE 1
DOOR BUMPER GUARDS & BOLLARDS	CONCRETE FILLED STEEL	FRAZEE PAINTS	DARK BRONZE	
GROUT			MATCH CMU COLOR	
FLASHING	METAL		MATCH ADJACENT MATERIAL	
ROOFS				
METAL	STANDING SEAM METAL	FRAZEE PAINTS	TRAVATAN	SEE NOTE 1
EPDM			BLACK	
TAPERED CONC FLOOR SLAB	CONCRETE		NATURAL GRAY	@ 2ND FLR OUTDOOR BREAK AREA

FLOOR PLAN LEGEND

BLDG 282 ADDITION | BLDG 282

EXTERIOR WALLS:

- NEW 8" CMU. SEE ELEVATIONS FOR FINISH
- 5/8" GWB ON 2-1/2" MET. STUD FURRING W/ R-8 INSULATION
- NEW 12" CMU. SEE PLANS FOR LOCATION & ELEVS FOR FINISH
- 5/8" GWB ON 2-1/2" MET. STUD FURRING W/ R-8 INSULATION
- EXISTING 8" CMU W/ FURRING

INTERIOR WALLS:

- EXISTING CMU WALL TO BE DEMOLISHED
- EXISTING STUD PARTITION TO BE DEMOLISHED
- EXISTING STUD PARTITION TO REMAIN

BLDG 282 ADDITION | BLDG 282

- NEW 3-5/8" MET. STUD U.O.N. @ 16" O.C. W/ 5/8" TYPE 'X' GWB EA. SIDE, EXTEND TO UNDERSIDE OF DECK ABOVE WHERE INDICATED
- EXISTING 8" CMU WALL U.O.N.
- NEW 8" PLAIN CMU WALL W/ FURRING ON ONE OR BOTH SIDES WHERE OCCURRING
- WINDOW TYPE (SEE A-610 FOR WINDOW SCHEDULE)
- DOOR NUMBER, (SEE A-608 THRU A-610 FOR DR SCHED.)
- ROOM NUMBER
- COLUMN LINE INDICATOR
- WALL TYPE (SEE SHEET A-501)

GENERAL NOTES:

A. CONTRACTOR SHALL FIELD VERIFY CONDITIONS AND DIMENSIONS ON EXISTING CONSTRUCTION

B. DIMENSIONS ON NEW CONSTRUCTION ARE TAKEN FROM FACE OF CMU OR FACE OF STUD U.O.N. DIMENSIONS TAKEN FROM EXISTING CONSTRUCTION ARE FROM FACE OF WALL U.O.N.

C. COLORS LISTED BY MANUFACTURER ARE FOR IDENTIFICATION PURPOSES ONLY AND ARE NOT INTENDED TO LIMIT SELECTIONS TO PRODUCTS OF THE MANUFACTURER INDICATED. THE SELECTIONS SERVE TO INDICATE THE COLOR AND QUALITY WHICH THE MANUFACTURERS MUSH APPROACH. REFER TO SPECIFICATIONS FOR COMPLETE REQUIREMENTS THE PRODUCT MUST MEET.

EXTERIOR NOTES (REMARKS COLUMN):

1. METAL BUILDING COMPONENTS ARE SPECIFIED AS FACTORY COLOR FINISH; THE COLOR INDICATED IN THE EXTERIOR COLOR SCHEDULE IS THE COLOR THAT THE MANUFACTURER'S FINISH COLOR MUST MATCH. THE INTENT IS TO MATCH THE BASE STANDARD.

US Army Corps of Engineers
Sacramento District

Symbol	Description	Date	Approved

Designed by: J.NEUMAYER
Dwn by: JFN
Spec No.: 1304
Reviewed by: D.TURNER
Submitted by: ____
Chief, Architectural Des. Sec.
Date: dd/mm/yy
Rev.
Design file no: 239-25-539
Drawing Code:
File name: N30H-001X00.dwg
Plot date: 07/15/04
Dwg scale: AS_NOTED

DEPARTMENT OF THE ARMY
CORPS OF ENGINEERS
SACRAMENTO, CALIFORNIA

SACRAMENTO DISTRICT
IN-HOUSE DESIGN
1325 J STREET
SACRAMENTO, CA 95814-2922

NEVADA

NELLIS AFB

F/A-22 ADD/ALTER WEAPONS SCHOOL

EXTERIOR COLOR SCHEDULE, ABBREVIATIONS AND LEGEND

Sheet reference number:
A-001

Border Revised 03/01/04, OCE9/TD23.DWG

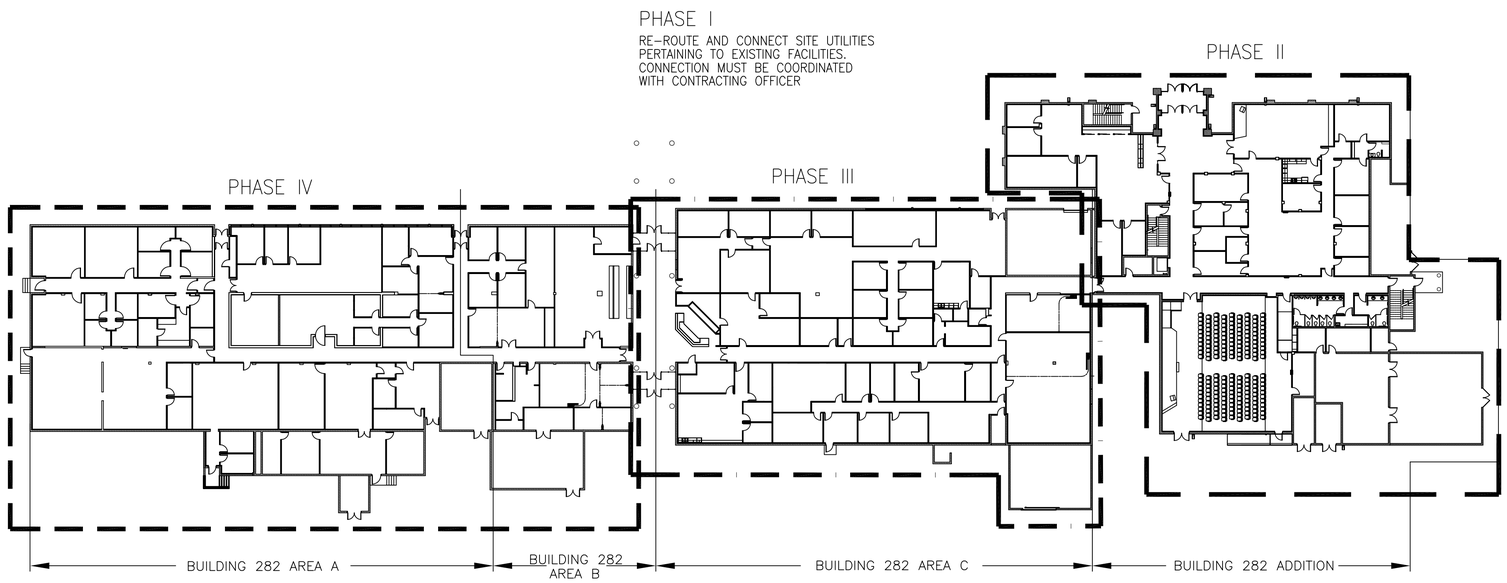

CONSTRUCTION PHASING NOTES:

1. PHASE II (NEW ADDITION) SHALL BE COMPLETED BEFORE PHASES III (AREA C) AND IV (AREAS A AND B) ARE BEGUN.
2. AFTER COMPLETION OF PHASE II THERE SHALL BE A 14 DAY PERIOD THAT THE GOVERNMENT WILL UTILIZE TO VACATE THE PHASE III AREA.
3. AFTER COMPLETION OF PHASE III THERE SHALL BE A 14 DAY PERIOD THAT THE GOVERNMENT WILL UTILITZE TO VACATE THE PHASE IV AREAS.
4. THE CONTRACTOR SHALL PROVIDE THE GOVERNMENT WITH A 45 DAY ADVANCE NOTICE PRIOR TO BEGINNNIG WORK ON PHASE III AND A 45 DAY ADVANCE NOTICE PRIOR TO BEGINNING WORK ON PHASE IV.

OVERALL REFERENCE FLOOR PLAN & CONSTRUCTION PHASING PLAN

SCALE: 1/32" = 1'-0

GRAPHIC SCALE

1/32"=1'-0" 0' 8' 16' 32' 64' 96'

REFERENCE NORTH

US Army Corps of Engineers
Sacramento District

Symbol	Description	Date	Approved

Designed by: J.NEUMYER
Dwn by: JFN
Reviewed by: D.TURNER
Submitted by:
Chief, Architectural Des. Sec.
Date: dd/mm/yy
Rev.
Spec No.: 1304
Design file no: 239-25-539
Drawing Code:
File name: N30A-100000.dwg
Plot date: 01/24/05
Dwg scale: AS_NOTED

DEPARTMENT OF THE ARMY
CORPS OF ENGINEERS
SACRAMENTO, CALIFORNIA

SACRAMENTO DISTRICT
IN-HOUSE DESIGN
1325 J STREET
SACRAMENTO, CA 95814-2922

NELLIS AFB NEVADA

F/A-22 ADD/ALTER WEAPONS SCHOOL

OVERALL REFERENCE FLOOR PLAN & CONTRUCTION PHASING PLAN

Sheet reference number:
A-101

Border Revised 03/01/04, CEGSHT02.DWG

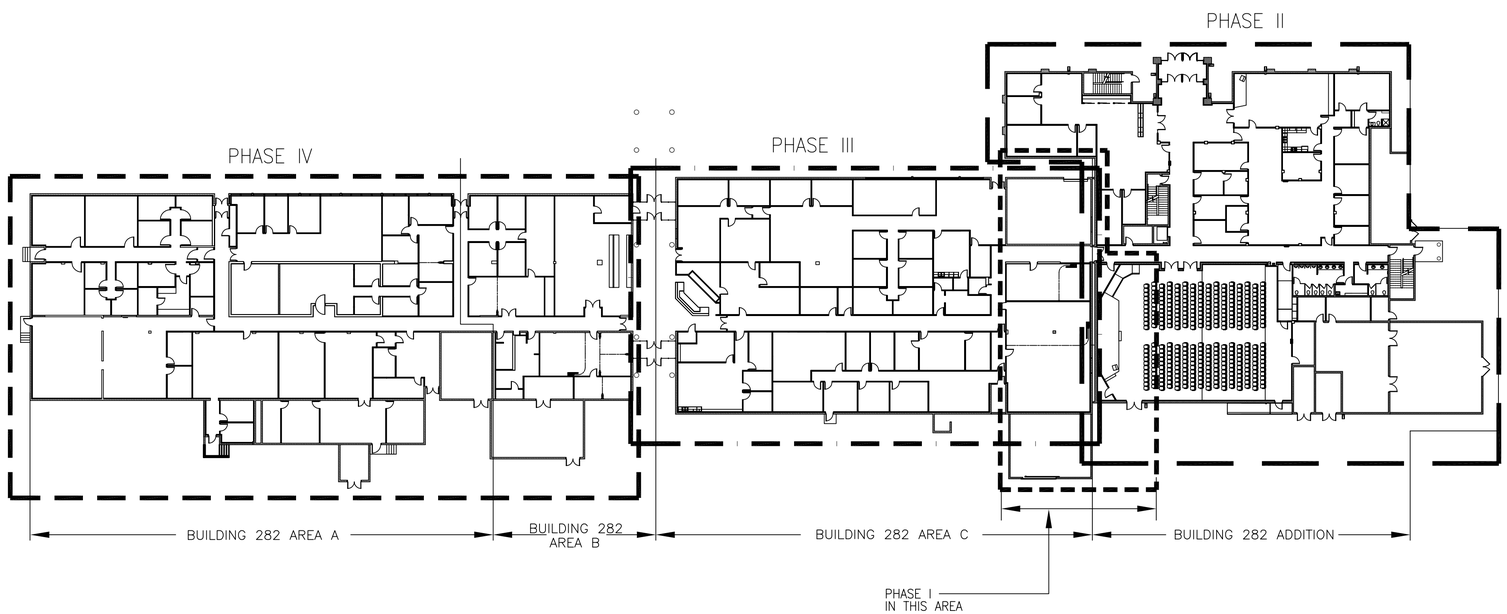

NOTE:
RE-ROUTING OF SITE UTILITIES PERTAINING TO EXISTING FACILITIES IS ALSO PART OF PHASE I

CONSTRUCTION PHASING NOTES:

1. PHASE II (NEW ADDITION) SHALL BE COMPLETED BEFORE PHASES III (AREA C) AND IV (AREAS A AND B) ARE BEGUN.
2. AFTER COMPLETION OF PHASE II THERE SHALL BE A 14 DAY PERIOD THAT THE GOVERNMENT WILL UTILIZE TO VACATE THE PHASE III AREA.
3. AFTER COMPLETION OF PHASE III THERE SHALL BE A 14 DAY PERIOD THAT THE GOVERNMENT WILL UTILITZE TO VACATE THE PHASE IV AREAS.
4. THE CONTRACTOR SHALL PROVIDE THE GOVERNMENT WITH A 45 DAY ADVANCE NOTICE PRIOR TO BEGINNNIG WORK ON PHASE III AND A 45 DAY ADVANCE NOTICE PRIOR TO BEGINNING WORK ON PHASE IV.

BID OPTION 1
INFORMATION ON THIS SHEET INCLUDES AN ENLARGED (352 SEAT) AUDITORIUM WHICH, WITH ITS ASSOCIATED STRUCTURAL, ARCHITECTURAL, MECHANICAL, AND ELECTRICAL SYSTEMS CONSTITUTES BID OPTION 1

OVERALL REFERENCE FLOOR PLAN & CONSTRUCTION PHASING PLAN

SCALE: 1/32" = 1'-0

INFORMATION ON THIS SHEET IS INCLUDED IN BID OPTION 1

GRAPHIC SCALE
1/32"=1'-0"
0' 8' 16' 32' 64' 96'

REFERENCE
NORTH

US Army Corps of Engineers
Sacramento District

Symbol	Description	Date	Approved

Designed by: J.NEUMYER
Dwn by: JFN
Reviewed by: D.TURNER
Submitted by:
Chief, Architectural Des. Sec.
Date: dd/mm/yy
Rev.
Spec No.: 1304
Design file no: 239-25-539
Drawing Code:
File name: N39A-100000.dwg
Plot date: 09/11/05
Dwg scale: AS_NOTED

DEPARTMENT OF THE ARMY
CORPS OF ENGINEERS
SACRAMENTO, CALIFORNIA

SACRAMENTO DISTRICT
IN-HOUSE DESIGN
1325 J STREET
SACRAMENTO, CA 95814-2922

NEVADA
NELLIS AFB
F/A-22 ADD/ALTER WEAPONS SCHOOL
OVERALL REFERENCE FLOOR PLAN & CONTRUCTION PHASING PLAN

Sheet reference number:
A-101A

Border Revised 03/01/04, CCESHT02.DWG

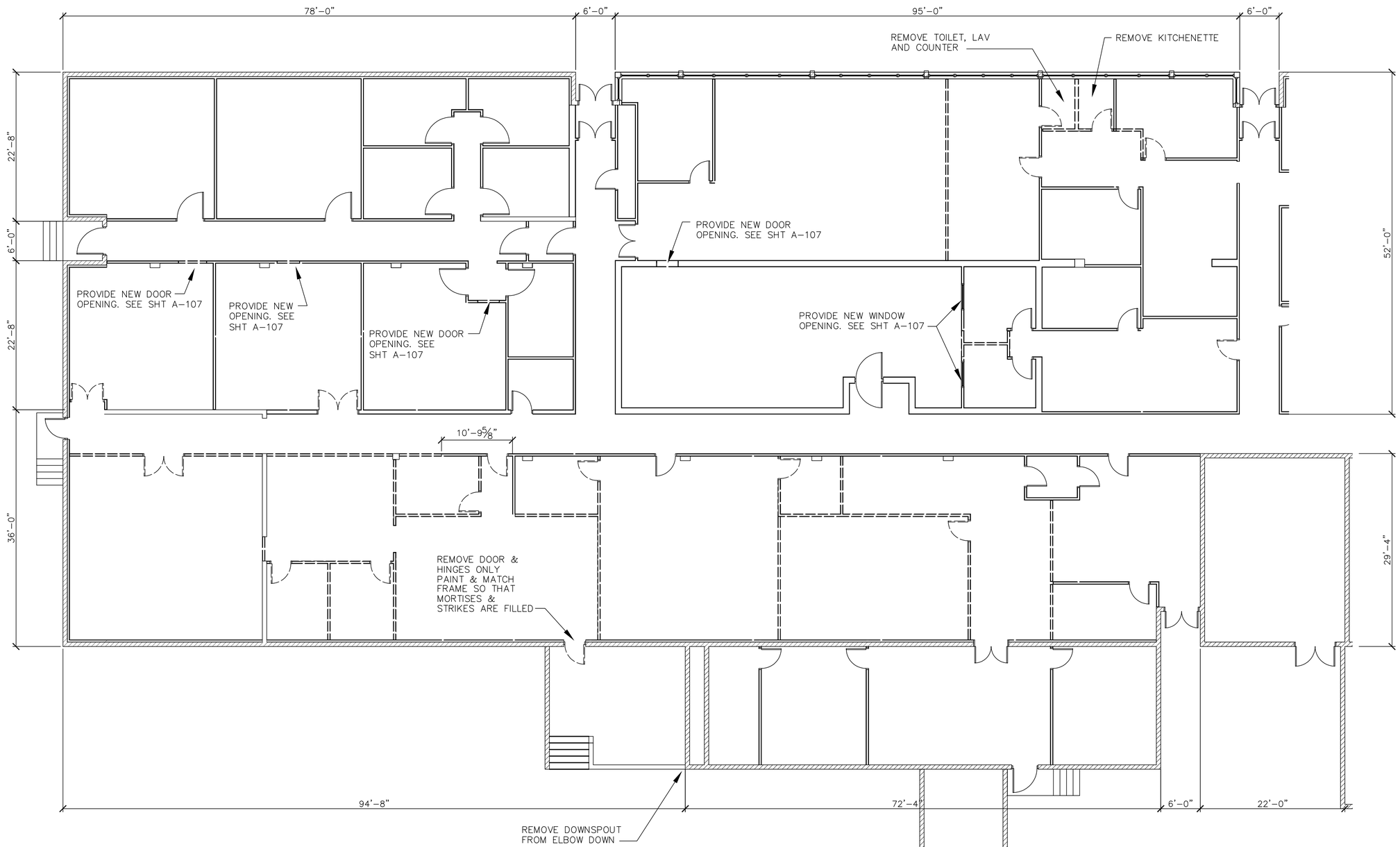

NOTES:

1. THE CONTRACTOR SHALL FIELD VERIFY THE EXISTING CONDITIONS WHERE WORK IS TO BE PERFORMED UNDER THIS CONTRACT.
2. SEE A-117 THRU A-119 FOR CEILING TILE CONTAINING GRAPHICS. ALL OTHER TILE, THE CEILING GRID, AND THE SUSPENSION SYSTEM SHALL BE REMOVED.

WALLS AND DOORS TO BE REMOVED UNDER THIS CONTRACT

BUILDING 282 ~ DEMOLITION FLOOR PLAN AREA A

SCALE: 1/8" = 1'-0

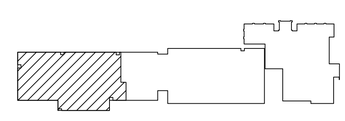

KEY PLAN
NTS

GRAPHIC SCALE

1/8"=1'-0" 0' 2' 4' 8' 16' 24'

REFERENCE NORTH

US Army Corps of Engineers
Sacramento District

Symbol	Description	Date	Approved

Designed by: LINDMYER
Dwn by: JFN
Spec No.: 1304
Design file no: 239-25-539
Drawing Code:
Reviewed by:
Submitted by:
Chief, Architectural Des. Sec.
Date: dd/mm/yy
Rev.
File name: N39H-102000.dwg
Plot date: 02/02/05
Dwg scale: AS_NOTED

DEPARTMENT OF THE ARMY
CORPS OF ENGINEERS
SACRAMENTO, CALIFORNIA

SACRAMENTO DISTRICT
IN-HOUSE DESIGN
1325 J STREET
SACRAMENTO, CA 95814-2922

NEVADA
NELLIS AFB
F/A-22 ADD/ALTER WEAPONS SCHOOL
BUILDING 282
DEMOLITION FLOOR PLAN AREA A

Sheet reference number:
A-102

Border Revised 03/01/04, CDESN702.DWG

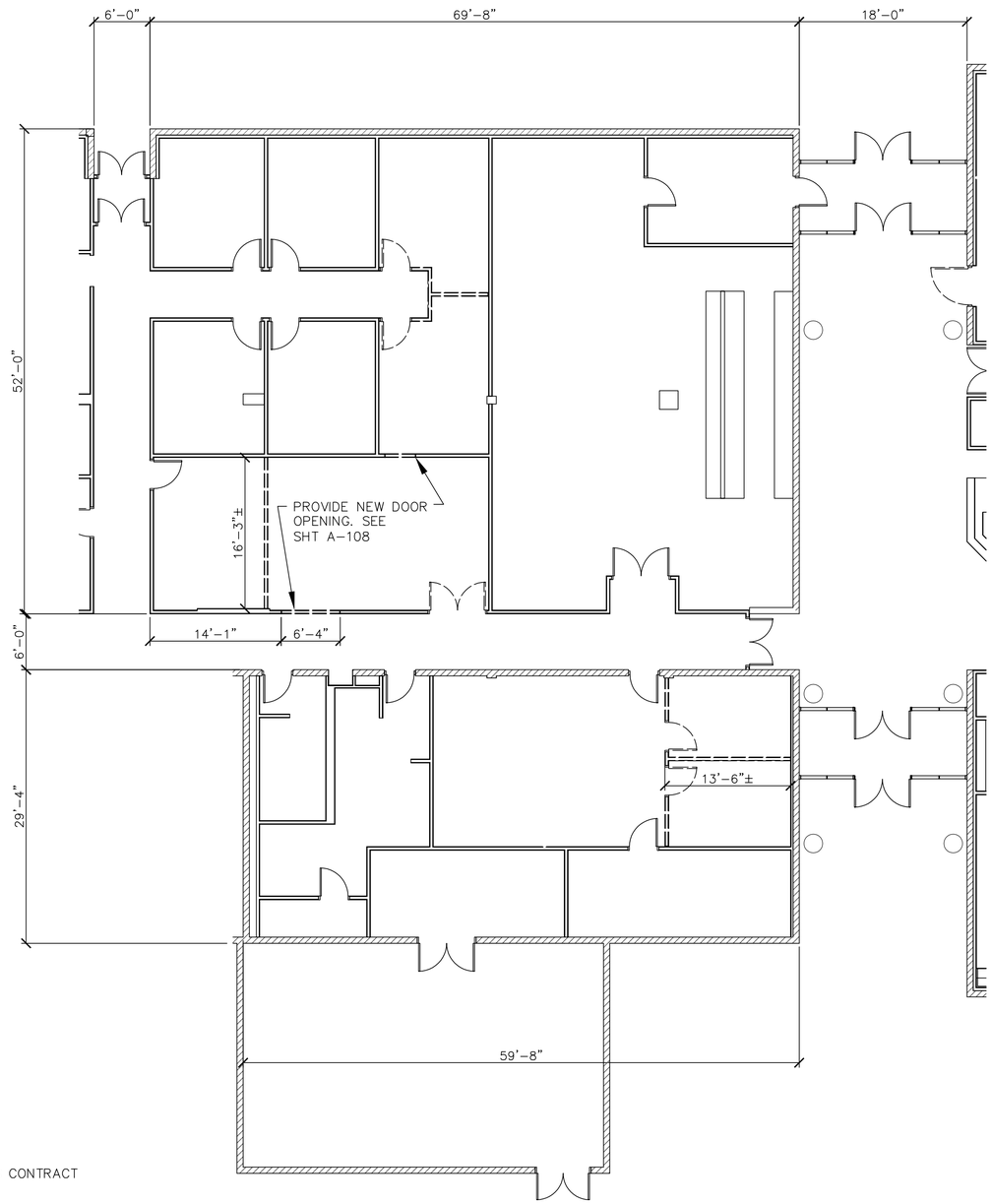

WALLS AND DOORS TO BE REMOVED UNDER THIS CONTRACT

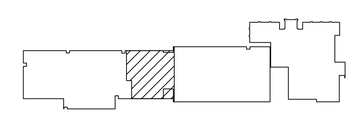

KEY PLAN
NTS

BUILDING 282 ~ DEMOLITION FLOOR PLAN AREA B

SCALE: 1/8" = 1'-0

GRAPHIC SCALE

1/8"=1'-0"

0' 2' 4' 8' 16' 24'

REFERENCE

NORTH

US Army Corps of Engineers
Sacramento District

Symbol	Description	Date	Approved

Designed by: J.NEUMYER
Dwn by: JFN
Spec No.: 1304
Reviewed by: D.TURNER
Submitted by:
Chief, Architectural Des. Sec.
Date: dd/mm/yy
Rev.
Design file no: 229-25-539
Drawing Code:
File name: N304-103200.dwg
Plot date: 01/04/05
Dwg scale: AS_NOTED

DEPARTMENT OF THE ARMY
CORPS OF ENGINEERS
SACRAMENTO, CALIFORNIA

SACRAMENTO DISTRICT
IN-HOUSE DESIGN
1325 J STREET
SACRAMENTO, CA 95814-2922

NELLIS AFB
NEVADA

F/A-22 ADD/ALTER WEAPONS SCHOOL

BUILDING 282
DEMOLITION FLOOR PLAN AREA B

Sheet reference number:
A-103

Border Revised 03/01/04, CKD:01/22/2MC

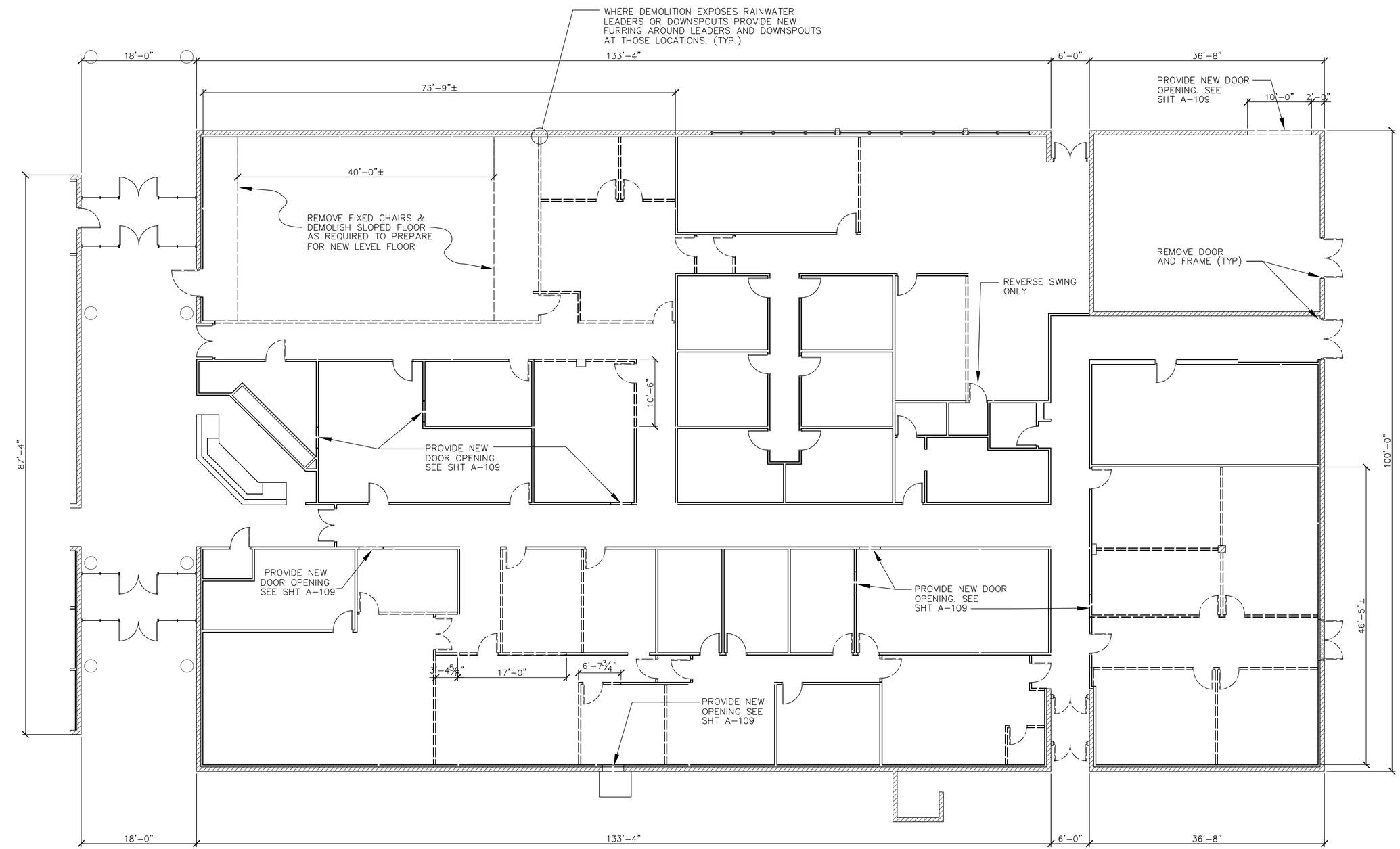

WALLS AND DOORS TO BE REMOVED UNDER THIS CONTRACT

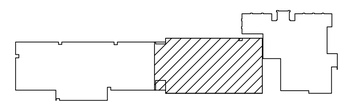

KEY PLAN

NTS

BUILDING 282 ~ DEMOLITION FLOOR PLAN AREA C

SCALE: 1/8" = 1'-0"

GRAPHIC SCALE

1/8"=1'-0" 0' 2' 4' 8' 16' 24'

REFERENCE NORTH

US Army Corps of Engineers
Sacramento District

Symbol	Description	Date	Approved

Designed by: J.NEUWYER
Dwn by: JFN
Spec No.: 1304
Reviewed by: D.TURNER
Submitted by:
Chief, Architectural Des. Sec.
Date: dd/mm/yy
Rev.
Design file no: 239-25-539
Drawing Code:
File name: N30H-F04W01.dwg
Plot date: 01/04/05
Dwg scale: AS_NOTED

DEPARTMENT OF THE ARMY
CORPS OF ENGINEERS
SACRAMENTO, CALIFORNIA

SACRAMENTO DISTRICT
IN-HOUSE DESIGN
1325 J STREET
SACRAMENTO, CA 95814-2922

NEVADA

NELLIS AFB

F/A-22 ADD/ALTER WEAPONS SCHOOL

BUILDING 282
DEMOLITION FLOOR PLAN AREA C

Sheet reference number:
A-104

Border Revised 03/01/04, CCES01D2.DWG

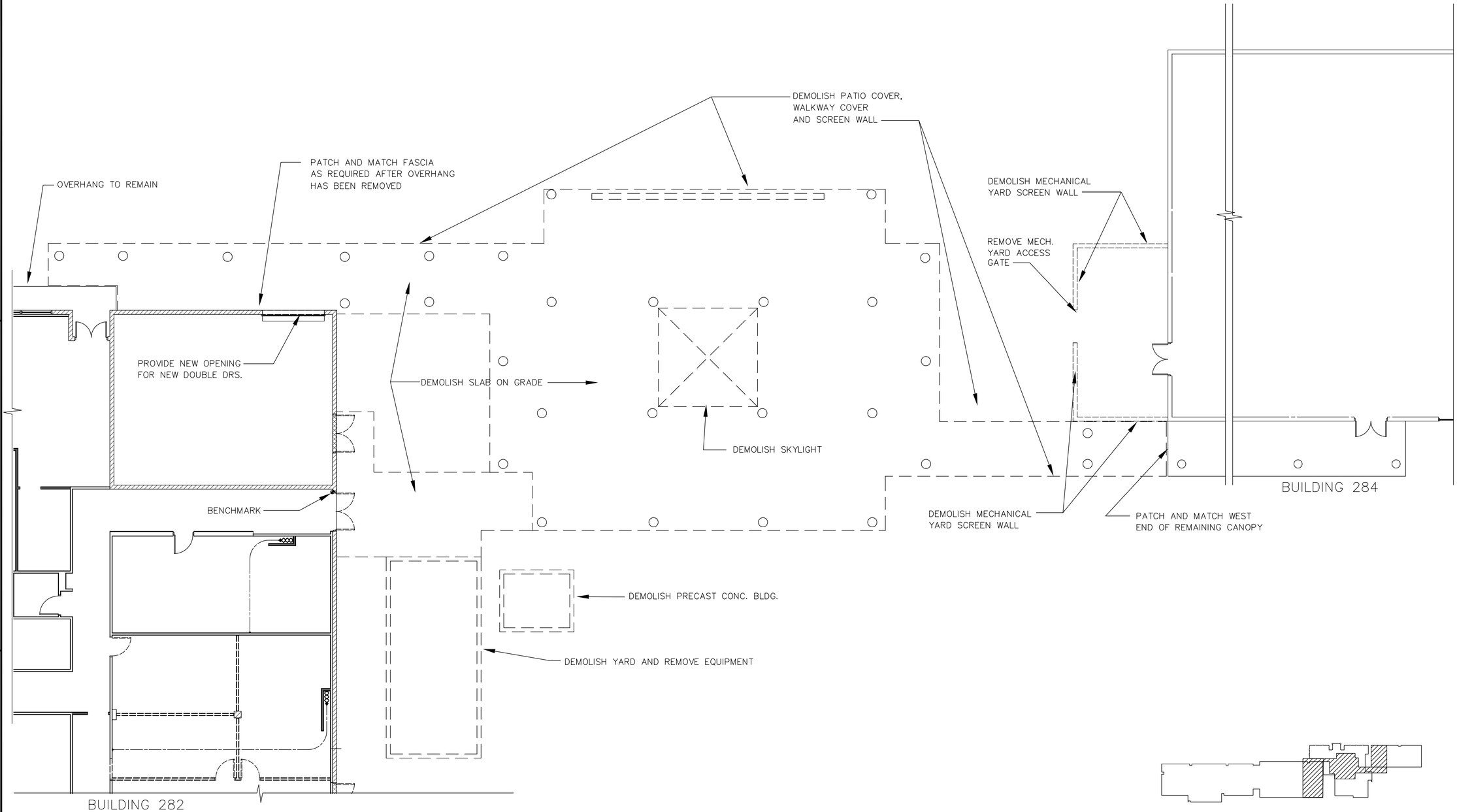

COVERED PATIO/WALKWAY DEMOLITION PLAN

SCALE: 1/8" = 1'-0"

KEY PLAN

GRAPHIC SCALE

0' 2' 4' 8' 16' 24'

1/8"=1'-0"

REFERENCE

NORTH

US Army Corps of Engineers
Sacramento District

Symbol	Description	Date	Approved

Rev.

Date: dd/mm/yy

Spec No.: 1304

Design file no: 239-25-539

Drawing Code:

File name: N39A-105000.dwg

Plot date: 01/04/05

Dwg scale: AS_NOTED

Designed by: J.NEUMYER

Dwn by: JFN

Reviewed by: D.TURNER

Submitted by:

Chief, Architectural Des. Sec.

DEPARTMENT OF THE ARMY
CORPS OF ENGINEERS
SACRAMENTO, CALIFORNIA

SACRAMENTO DISTRICT
IN-HOUSE DESIGN
1325 J STREET
SACRAMENTO, CA 95814-2922

NEVADA

NELLIS AFB

F/A-22 ADD/ALTER WEAPONS SCHOOL

COVERED PATIO
DEMOLITION PLAN

Sheet reference number:

A-105

Border Revised 03/01/04, CCES01D2.DWG

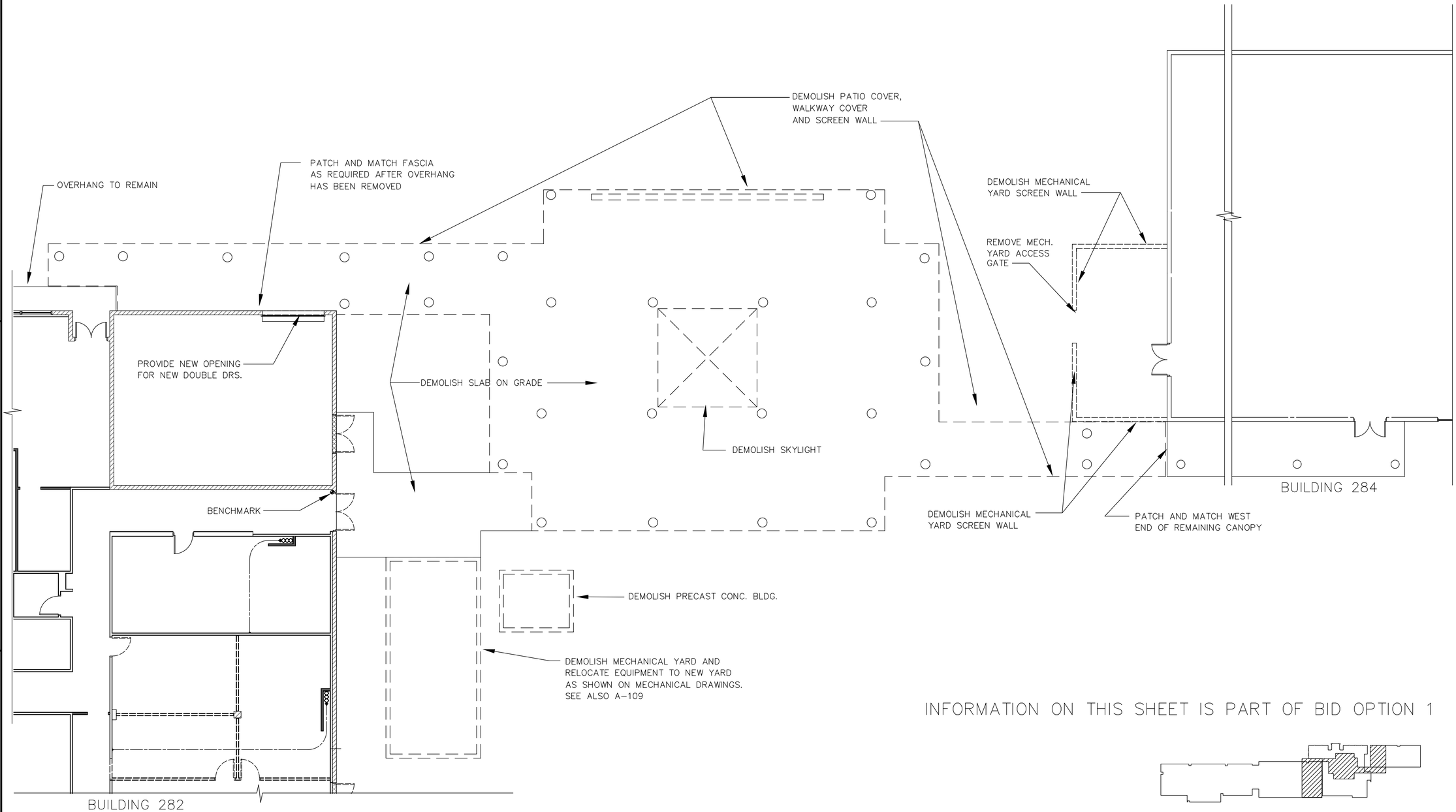

INFORMATION ON THIS SHEET IS PART OF BID OPTION 1

KEY PLAN

COVERED PATIO/WALKWAY DEMOLITION PLAN

SCALE: 1/8" = 1'-0"

GRAPHIC SCALE

0' 2' 4' 8' 16' 24'

1/8"=1'-0"

REFERENCE

NORTH

US Army Corps of Engineers
Sacramento District

Symbol	Description	Date	Approved

Rev.

Date: dd/mm/yy

Design file no: 239-25-539

Drawing Code:

File name: N30A-105POC.dwg
Plot date: 01/24/05
Dwg scale: AS_NOTED

Designed by: J.NEUMYER

Dwn by: JFN

Spec No.: 1304

Reviewed by: D.TURNER

Submitted by:

Chief, Architectural Des. Sec.

DEPARTMENT OF THE ARMY
CORPS OF ENGINEERS
SACRAMENTO, CALIFORNIA

SACRAMENTO DISTRICT
IN-HOUSE DESIGN
1325 J STREET
SACRAMENTO, CA 95814-2922

NEVADA

NELLIS AFB

F/A-22 ADD/ALTER WEAPONS SCHOOL

COVERED PATIO
DEMOLITION PLAN

Sheet reference number:

A-105A

Border Revised 03/01/04, CCES01D2.DWG

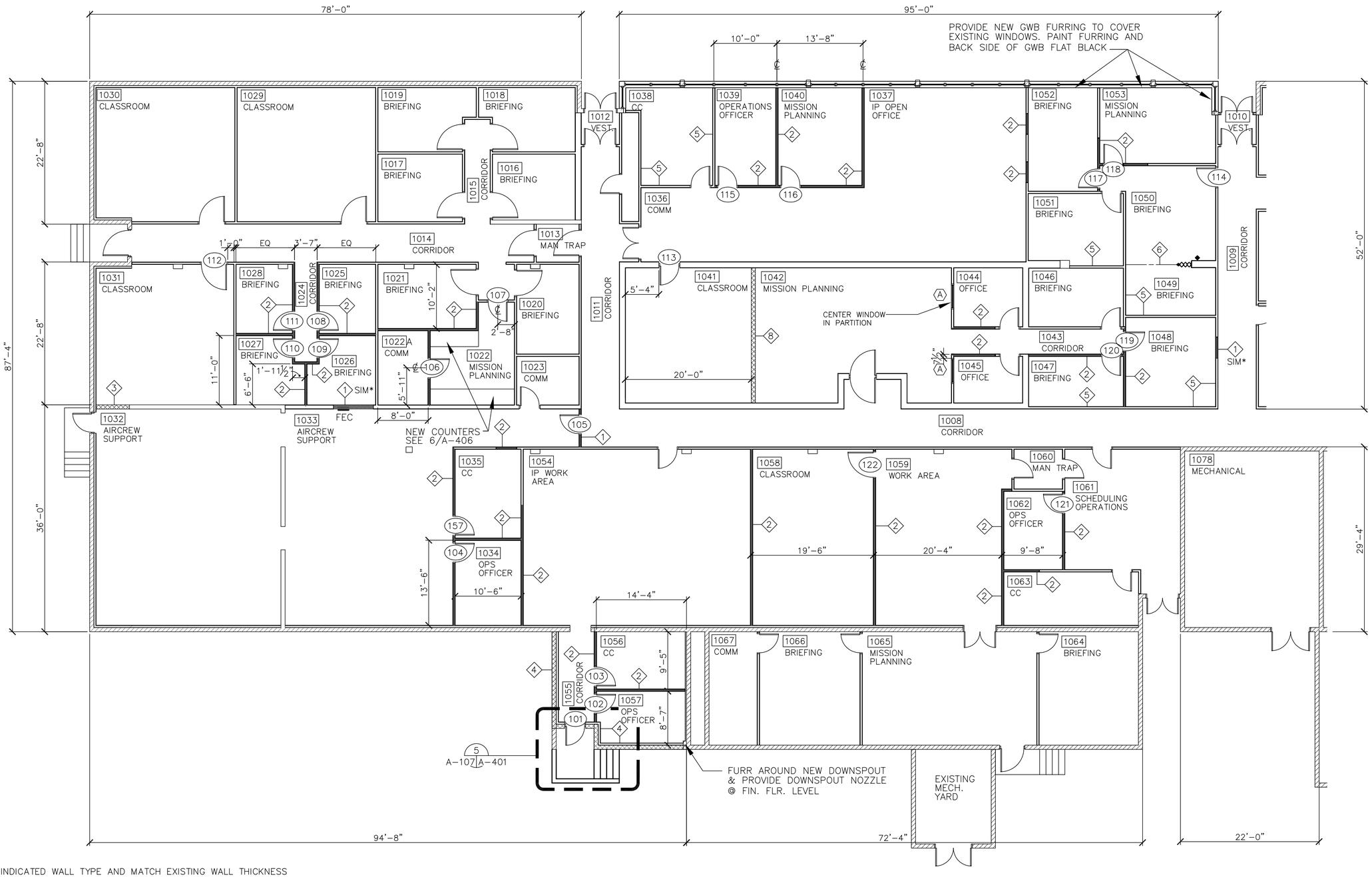

SIM* – USE INDICATED WALL TYPE AND MATCH EXISTING WALL THICKNESS

◆ LOCATION OF ROOM SIGNAGE FOR ROOM 1049

BUILDING 282 ~ FLOOR PLAN AREA A

SCALE: 1/8" = 1'-0

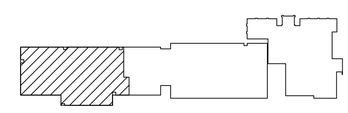

KEY PLAN
NTS

GRAPHIC SCALE
1/8"=1'-0" 0' 2' 4' 8' 16' 24'

REFERENCE
NORTH

US Army Corps of Engineers
Sacramento District

Symbol	Description	Date	Approved

Rev.
Date: dd/mm/yy
Design file no: 229-25-539
Drawing Code:
File name: N39A-107000.dwg
Plot date: 03/29/05
Dwg scale: AS_NOTED

Designed by: JNEUWYER
Dwn by: JFN
Spec No.: 1304
Reviewed by:
Submitted by:
Chief, Architectural Div. Sec.

DEPARTMENT OF THE ARMY
CORPS OF ENGINEERS
SACRAMENTO, CALIFORNIA

SACRAMENTO DISTRICT
IN-HOUSE DESIGN
1325 J STREET
SACRAMENTO, CA 95814-2922

NEVADA
NELLIS AFB
F/A-22 ADD/ALTER WEAPONS SCHOOL
BUILDING 282
FLOOR PLAN AREA A

Sheet reference number:
A-107

Border Revised 03/01/04, 00E3R102.DWG

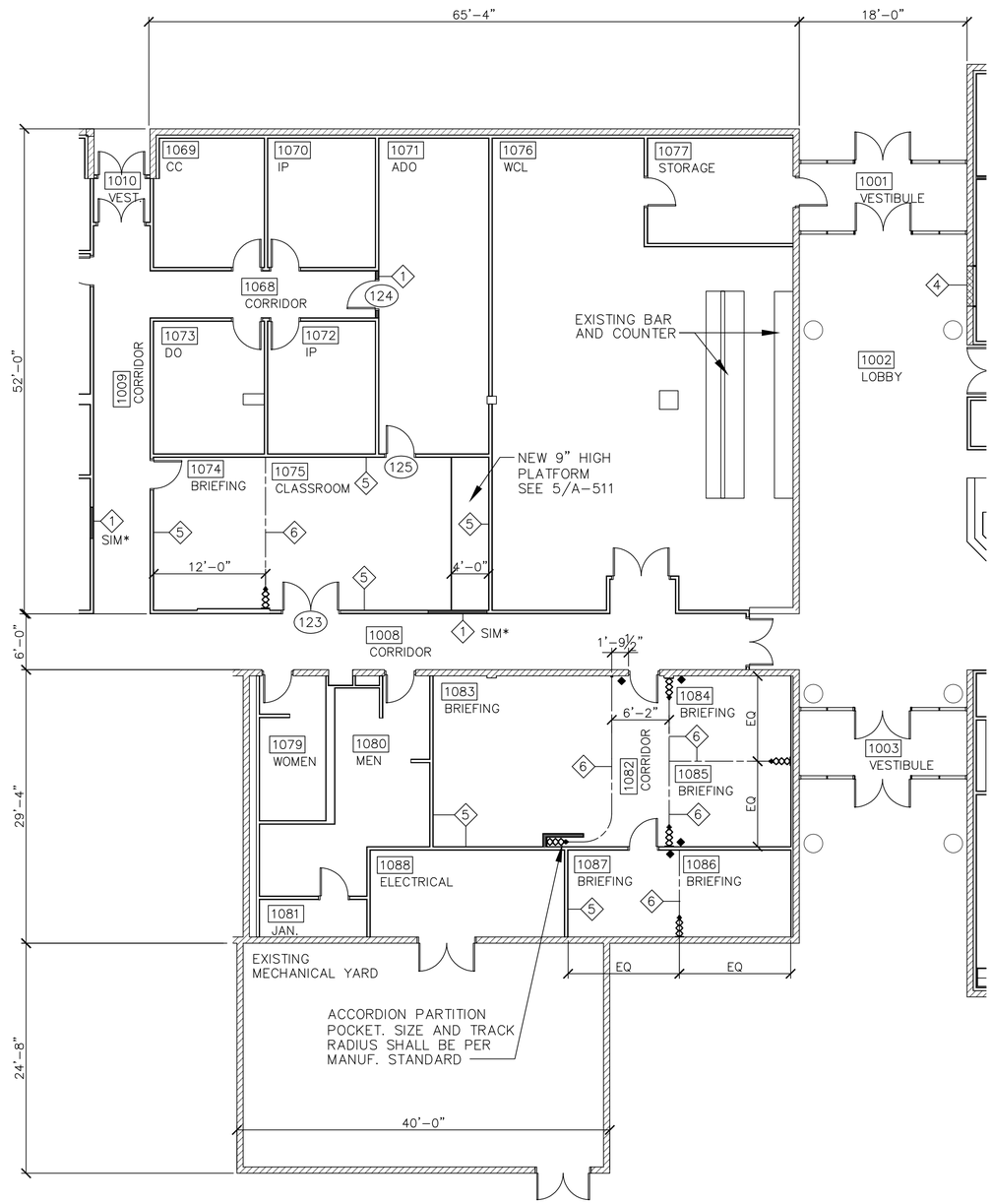

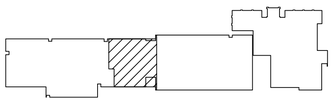

KEY PLAN
NTS

SIM* – USE INDICATED WALL TYPE AND MATCH EXISTING WALL THICKNESS

◆ LOCATION OF ROOM SIGNAGE FOR ROOMS 1083, 1084, 1085 & 1086

BUILDING 282 ~ FLOOR PLAN AREA B

SCALE: 1/8" = 1'-0

GRAPHIC SCALE

1/8"=1'-0"

0' 2' 4' 8' 16' 24'

REFERENCE

NORTH

US Army Corps of Engineers
Sacramento District

Symbol	Description	Date	Approved

Designed by: J.NEUMYER
Dwn by: JFN
Spec No.: 1304
Reviewed by: D.TURNER
Submitted by:
Chief, Architectural Des. Sec.
Date: dd/mm/yy
Rev.
Design file no: 229-25-539
Drawing Code:
File name: N30A-108000.dwg
Plot date: 03/29/05
Dwg scale: AS_NOTED

DEPARTMENT OF THE ARMY
CORPS OF ENGINEERS
SACRAMENTO, CALIFORNIA

SACRAMENTO DISTRICT
IN-HOUSE DESIGN
1325 J STREET
SACRAMENTO, CA 95814-2922

NEVADA

NELLIS AFB

F/A-22 ADD/ALTER WEAPONS SCHOOL

BUILDING 282
FLOOR PLAN AREA B

Sheet reference number:
A-108

Border Revised 03/01/04, CKD:SHTCLEMO

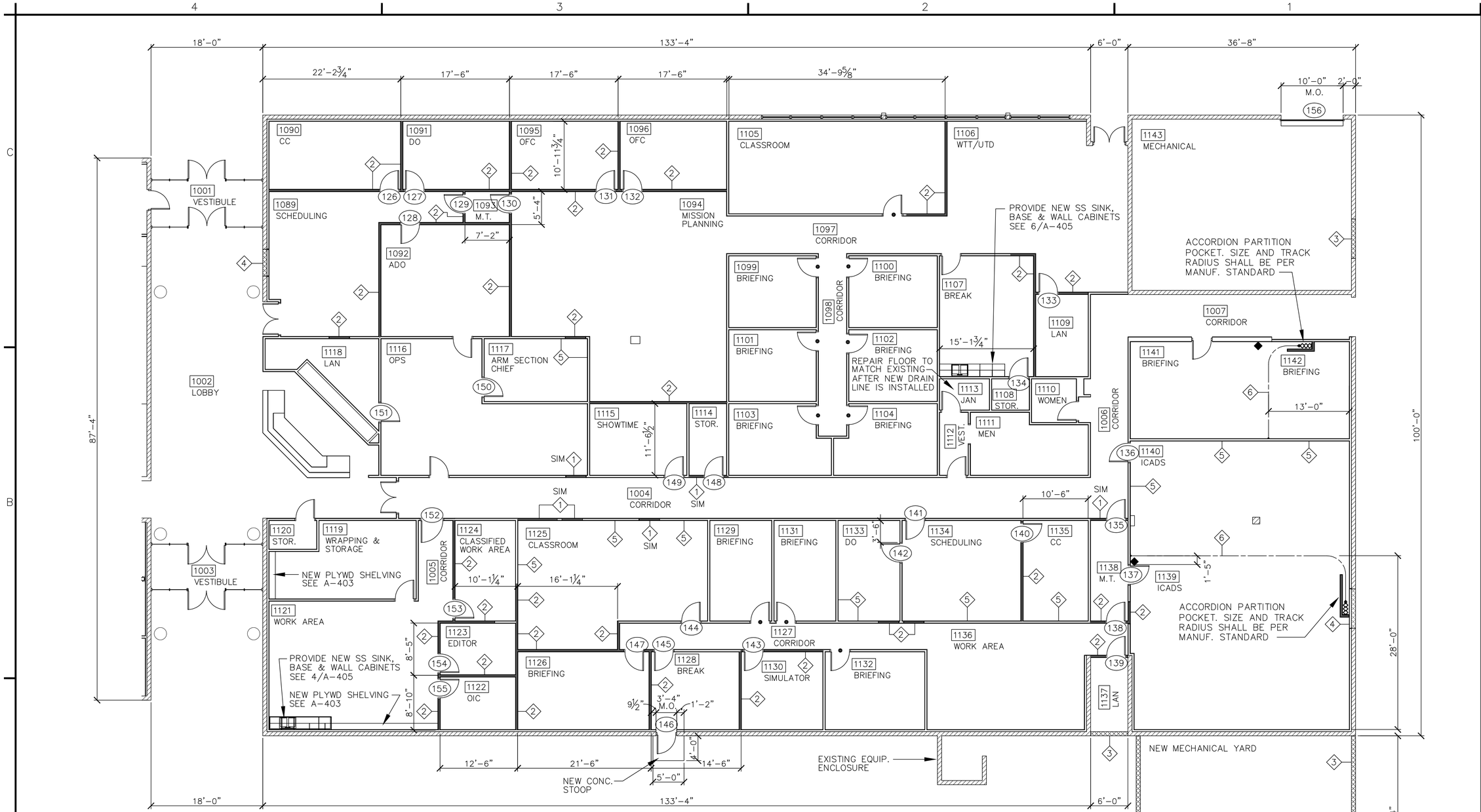

⟨X⟩ WALL TYPE. SEE SHEET A-501

SIM – USE INDICATED WALL TYPE AND MATCH EXISTING WALL THICKNESS

● EXISTING DOORS WHICH SHALL HAVE DOOR VIEWERS INSTALLED W/ VIEWING SIDE FROM THE CORRIDOR

◆ LOCATION OF ROOM SIGNAGE FOR ROOMS 1040 & 1042

BUILDING 282 ~ FLOOR PLAN AREA C

SCALE: 1/8" = 1'-0"

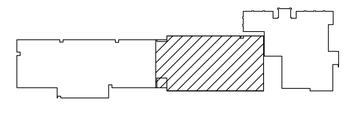

KEY PLAN

NTS

GRAPHIC SCALE

1/8"=1'-0"

0' 2' 4' 8' 16' 24'

REFERENCE

NORTH

US Army Corps of Engineers
Sacramento District

Symbol	Description	Date	Approved

Rev.

Date: dd/mm/yy
Design file no: 239-25-539
Drawing Code:
File name: N39A-F0390C.dwg
Plot date: 03/29/05
Dwg scale: AS_NOTED

Designed by: J.NEUMAYER
Dwn by: JFN
Spec No: 1304
Reviewed by:
Submitted by:
Chief, Architectural Des. Sec.

DEPARTMENT OF THE ARMY
CORPS OF ENGINEERS
SACRAMENTO, CALIFORNIA

SACRAMENTO DISTRICT
IN-HOUSE DESIGN
1325 J STREET
SACRAMENTO, CA 95814-2922

NEVADA

NELLIS AFB

F/A-22 ADD/ALTER WEAPONS SCHOOL

BUILDING 282
FLOOR PLAN AREA C

Sheet reference number:
A-109

Border Revised 03/01/04, CKS/HTD/JWG

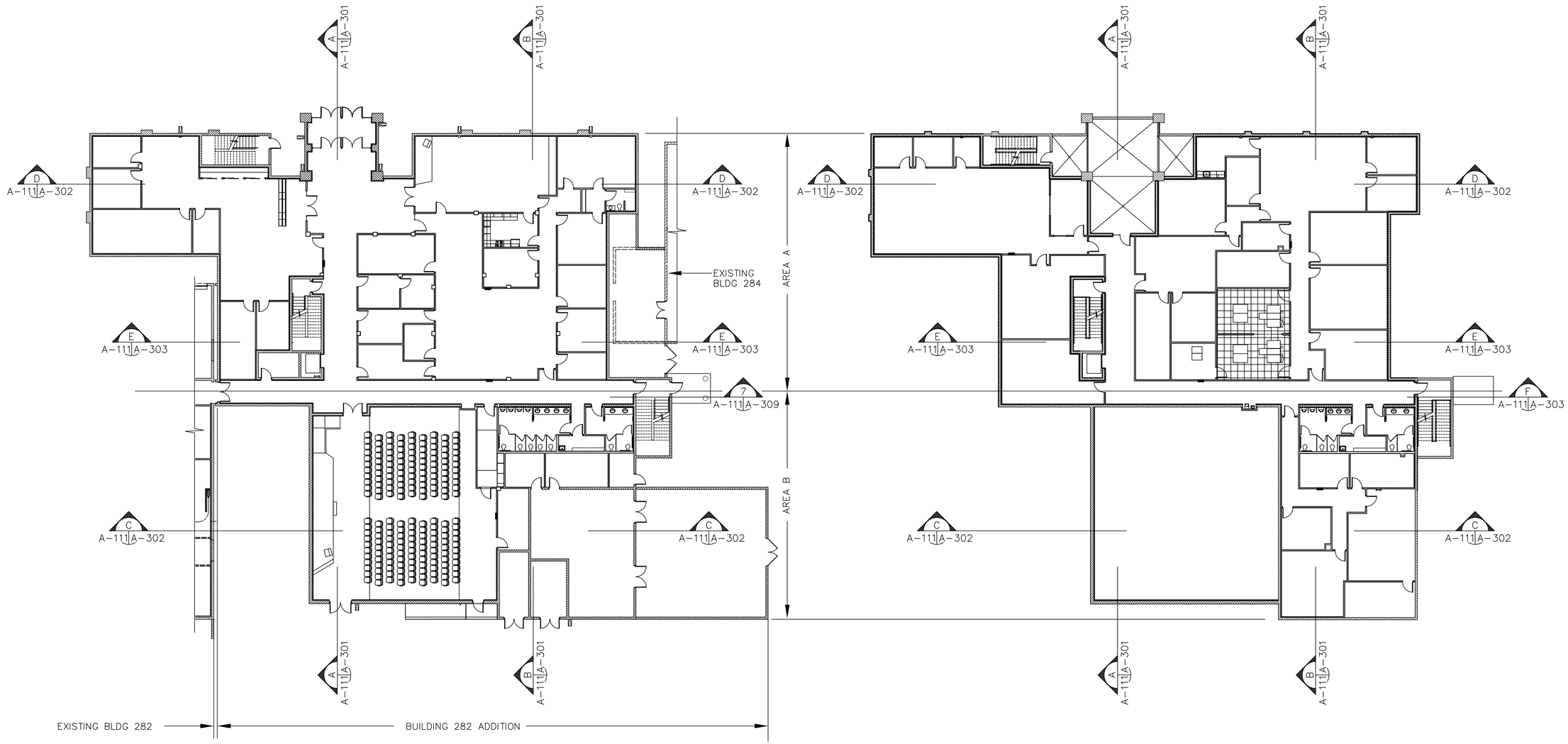

FIRST FLOOR PLAN

SCALE: 1/16" = 1'-0"

SECOND FLOOR PLAN

SCALE: 1/16" = 1'-0"

BUILDING 282 ADDITION ~ REFERENCE FLOOR PLANS

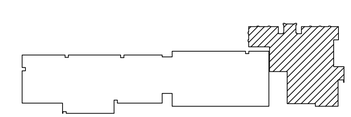

KEY PLAN

GRAPHIC SCALE

1/16"=1'-0" 0' 4' 8' 16' 32' 48'

REFERENCE NORTH

US Army Corps of Engineers
Sacramento District

Symbol	Description	Date	Approved

Designed by: J.NEUMYER
Dwn by: JFN
Spec No.: 1304
Reviewed by:
Submitted by:
Chief, Architectural Des. Sec.
Date: dd/mm/yy
Rev.
Design file no: 239-25-539
Drawing Code:
File name: N39A-110202.dwg
Plot date: 09/11/05
Dwg scale: AS_NOTED

DEPARTMENT OF THE ARMY
CORPS OF ENGINEERS
SACRAMENTO, CALIFORNIA

SACRAMENTO DISTRICT
IN-HOUSE DESIGN
1325 J STREET
SACRAMENTO, CA 95814-2922

NEVADA

NELLIS AFB

F/A-22 ADD/ALTER WEAPONS SCHOOL

BUILDING 282 ADDITION
REFERENCE FLOOR PLANS

Sheet reference number:
A-111

Border Revised 03/11/04, CDESH1122.DWG

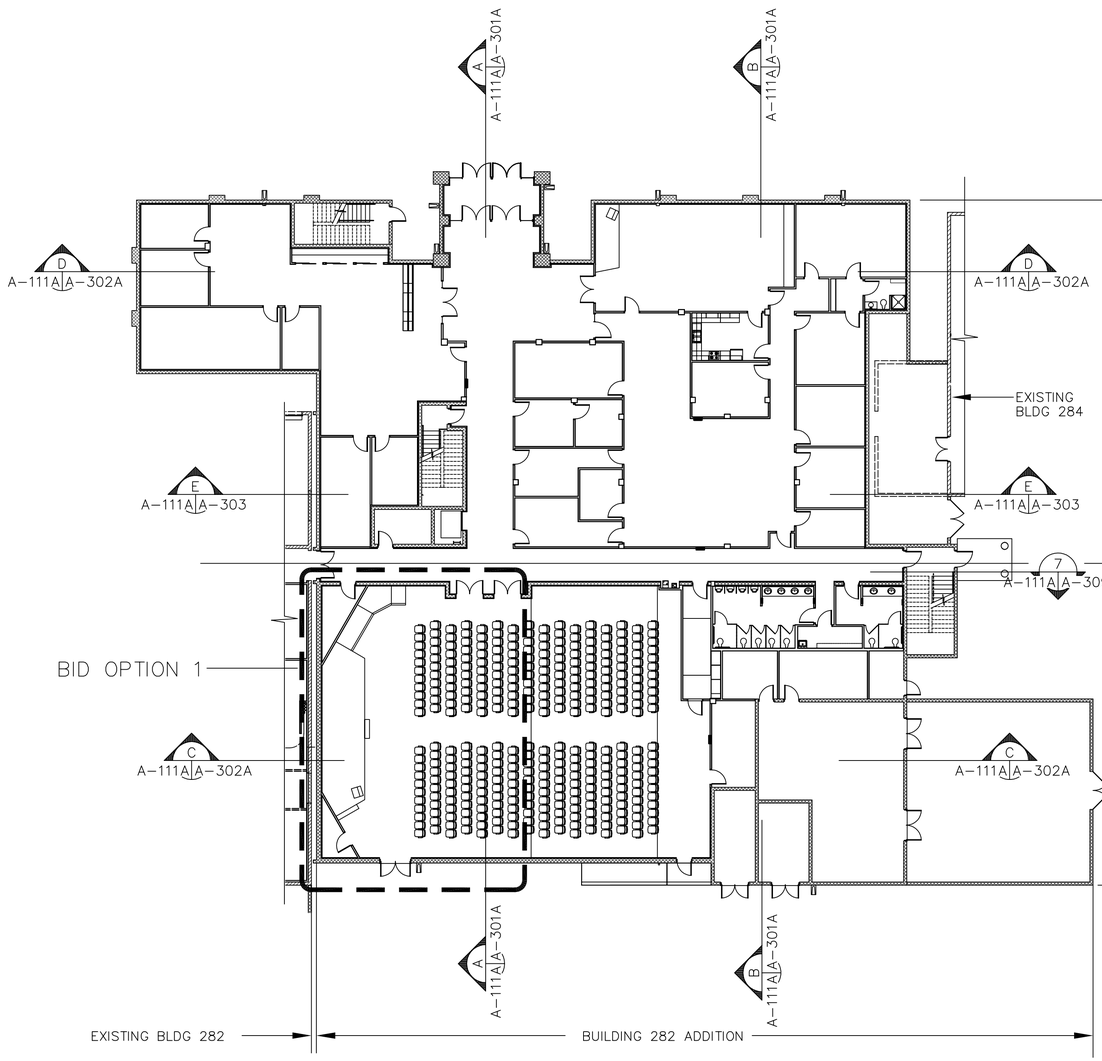

FIRST FLOOR PLAN

SCALE: 1/16" = 1'-0"

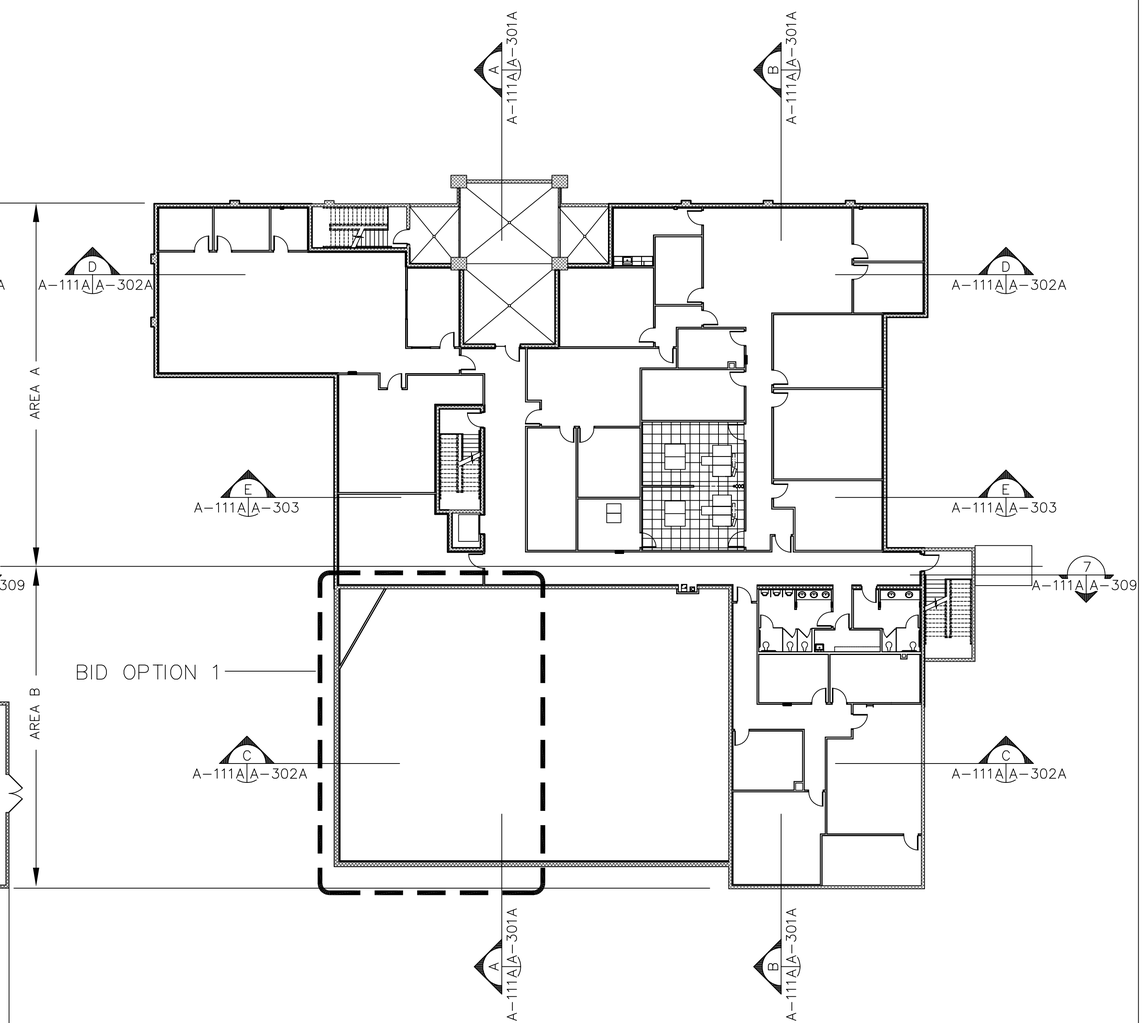

SECOND FLOOR PLAN

SCALE: 1/16" = 1'-0"

BUILDING 282 ADDITION ~ REFERENCE FLOOR PLANS

INFORMATION ON THIS SHEET IS INCLUDED IN BID OPTION 1

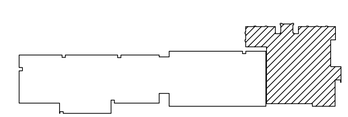

KEY PLAN

GRAPHIC SCALE

1/16"=1'-0" 0' 4' 8' 16' 32' 48'

REFERENCE NORTH

US Army Corps of Engineers
Sacramento District

Symbol	Description	Date	Approved

Designed by: JJNEUMYER
Dwn by: JFN
Spec No.: 1304
Date: dd/mm/yy
Rev.
Design file no: 229-25-539
Drawing Code:
Reviewed by:
Submitted by:
Chief, Architectural Sec. Sec.
File name: N30A-110906.dwg
Plot date: 02/11/05
Dwg scale: AS_NOTED

DEPARTMENT OF THE ARMY
CORPS OF ENGINEERS
SACRAMENTO, CALIFORNIA

SACRAMENTO DISTRICT
IN-HOUSE DESIGN
1325 J STREET
SACRAMENTO, CA 95814-2922

NEVADA

NELLIS AFB

F/A-22 ADD/ALTER WEAPONS SCHOOL

BUILDING 282 ADDITION
REFERENCE FLOOR PLANS

Sheet reference number:
A-111A

Border Revised 03/01/04, CKESHTOZ.DWG

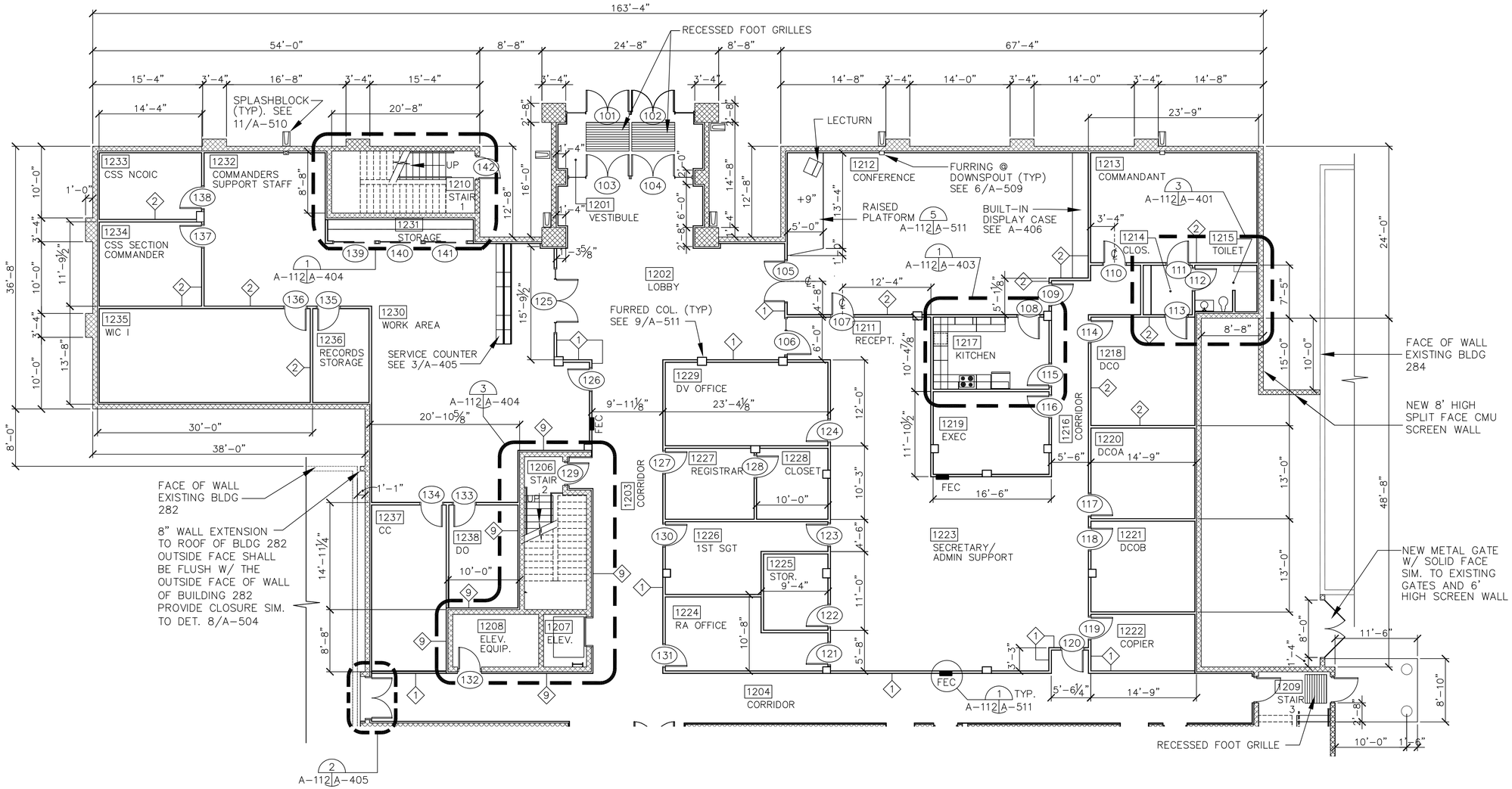

NOTE:
INTERIOR STUD PARTITIONS ARE WALL TYPE 10 U.O.N.

BUILDING 282 ADDITION ~ FIRST FLOOR PLAN AREA A

SCALE: 1/8" = 1'-0"

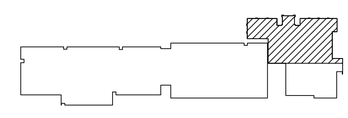

KEY PLAN
NTS

GRAPHIC SCALE
1/8"=1'-0" 0' 2' 4' 8' 16' 24'

REFERENCE
NORTH

US Army Corps of Engineers
Sacramento District

Symbol	Description	Date	Approved

Rev.

Date: dd/mm/yy
Design file no: 229-25-539
Drawing Code:
File name: N30A-112A0C.dwg
Plot date: 03/29/05
Dwg scale: AS_NOTED

Designed by: JNEUMYER
Dwn by: JFN
Spec No.: 1304
Reviewed by:
Submitted by:
Chief, Architectural Des. Sec.

DEPARTMENT OF THE ARMY
CORPS OF ENGINEERS
SACRAMENTO, CALIFORNIA

SACRAMENTO DISTRICT
IN-HOUSE DESIGN
1325 J STREET
SACRAMENTO, CA 95814-2922

NEVADA

NELLIS AFB

F/A-22 ADD/ALTER WEAPONS SCHOOL

BUILDING 282 ADDITION
FIRST FLOOR ADDITION AREA A

Sheet reference number:
A-112

Border Revised 03/01/04, CKESHTOZ.DWG

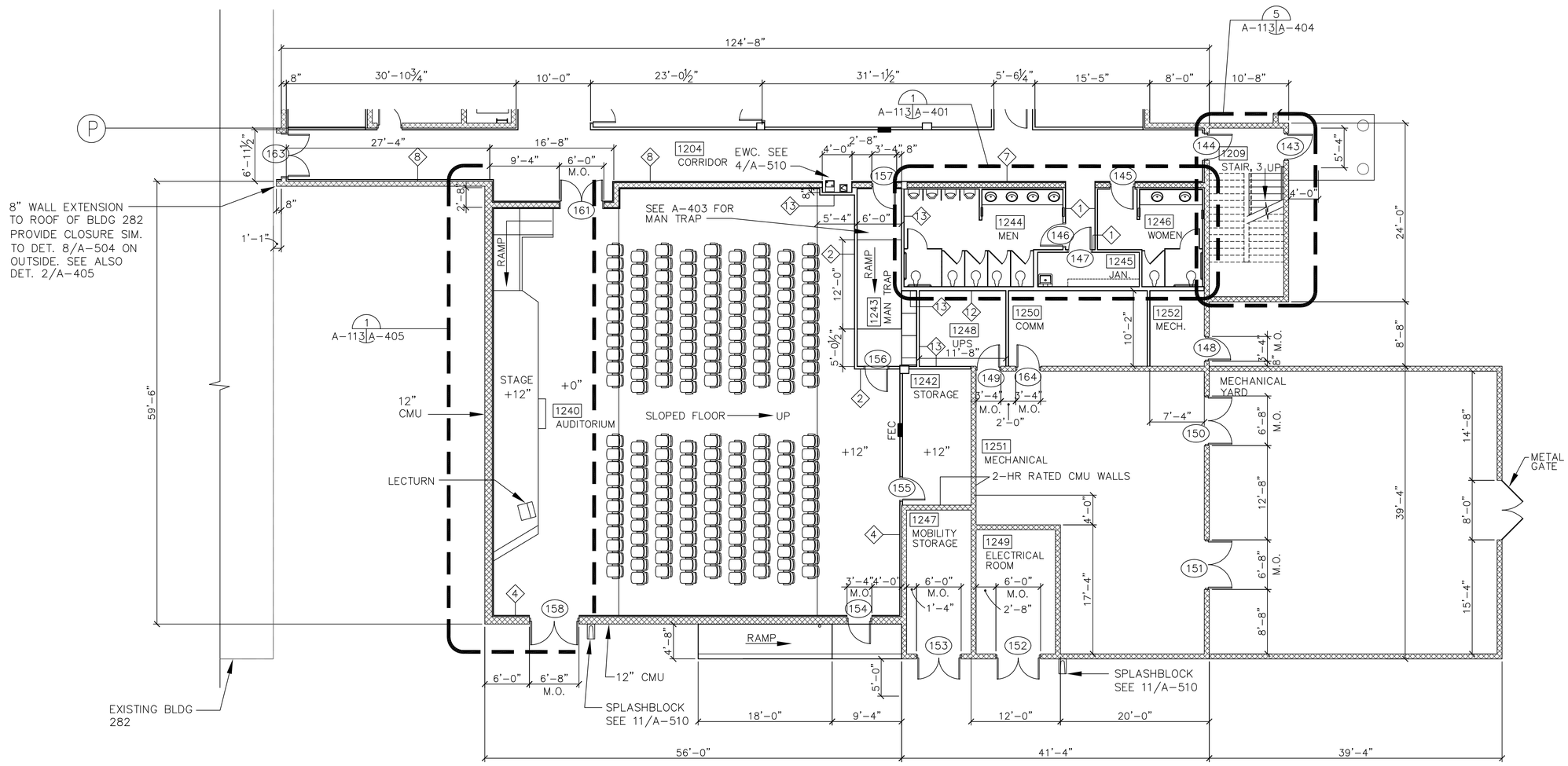

NOTE:
INTERIOR STUD PARTITIONS ARE WALL TYPE 10 U.O.N.

BUILDING 282 ADDITION ~ FIRST FLOOR PLAN AREA B

SCALE: 1/8" = 1'-0"

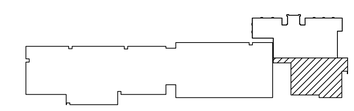

KEY PLAN
NTS

GRAPHIC SCALE
1/8"=1'-0"
0' 2' 4' 8' 16' 24'

REFERENCE
NORTH

US Army Corps of Engineers
Sacramento District

Symbol	Description	Date	Approved

Designed by: J.NEUMYER
Dwn by: JFN
Reviewed by:
Submitted by:
Chief, Architectural Des. Sec.
Date: dd/mm/yy
Spec No.: 1304
Design file no: 229-25-539
Drawing Code:
Rev.
File name: N39411300.dwg
Plot date: 06/13/05
Dwg scale: AS_NOTED

DEPARTMENT OF THE ARMY
CORPS OF ENGINEERS
SACRAMENTO, CALIFORNIA

SACRAMENTO DISTRICT
IN-HOUSE DESIGN
1325 J STREET
SACRAMENTO, CA 95814-2922

NEVADA
NELLIS AFB
F/A-22 ADD/ALTER WEAPONS SCHOOL
BUILDING 282 ADDITION
FIRST FLOOR AREA B

Sheet reference number:
A-113

UPDATE

Border Revised 03/01/04, CCESKITD2.DWG

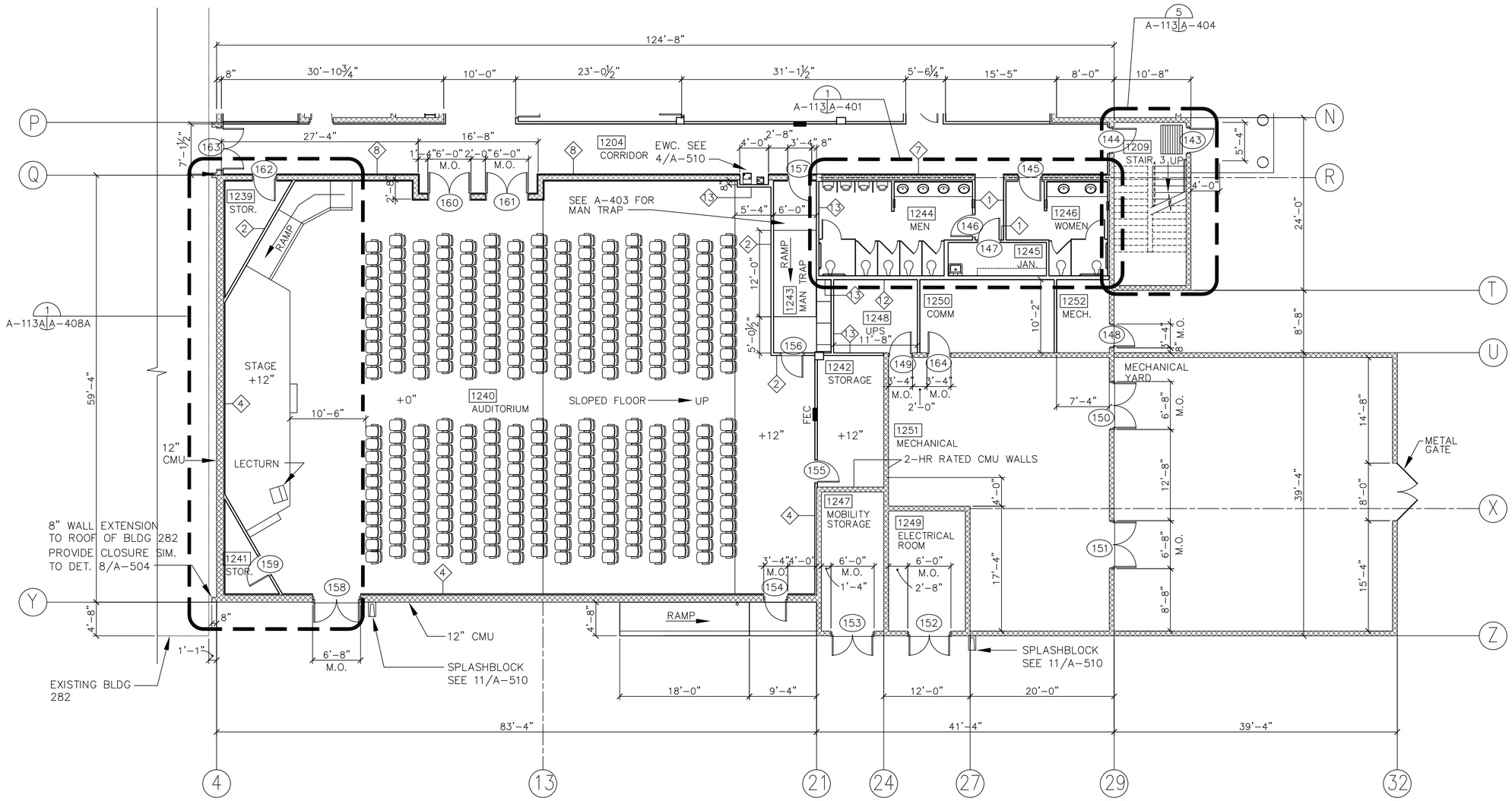

INFORMATION ON THIS SHEET INCLUDED IN BID OPTION 1

NOTE:
INTERIOR STUD PARTITIONS ARE WALL TYPE 10 U.O.N.

BUILDING 282 ADDITION ~ FIRST FLOOR PLAN AREA B

SCALE: 1/8" = 1'-0"

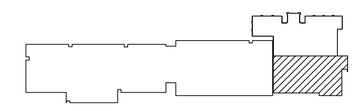

KEY PLAN
NTS

GRAPHIC SCALE
1/8"=1'-0" 0' 2' 4' 8' 16' 24'

REFERENCE
NORTH

US Army Corps of Engineers
Sacramento District

Symbol	Description	Date	Approved

Designed by: J.NEUMYER
Dwn by: JFN
Reviewed by:
Submitted by:
Chief, Architectural Des. Sec.
Date: dd/mm/yy
Rev.
Design file no: 239-25-539
Spec No.: 1304
Drawing Code:
File name: N39411300.dwg
Plot date: 06/13/05
Dwg scale: AS_NOTED

DEPARTMENT OF THE ARMY
CORPS OF ENGINEERS
SACRAMENTO, CALIFORNIA

SACRAMENTO DISTRICT
IN-HOUSE DESIGN
1325 J STREET
SACRAMENTO, CA 95814-2922

NEVADA
NELLIS AFB
F/A-22 ADD/ALTER WEAPONS SCHOOL
BUILDING 282 ADDITION
FIRST FLOOR AREA B

Sheet reference number:
A-113A

UPDATE

Border Revised 03/09/04, CCSM17022.DWG