INFORMATION ONLY CONTRACTOR TO VERIFY DURING SITE VISIT

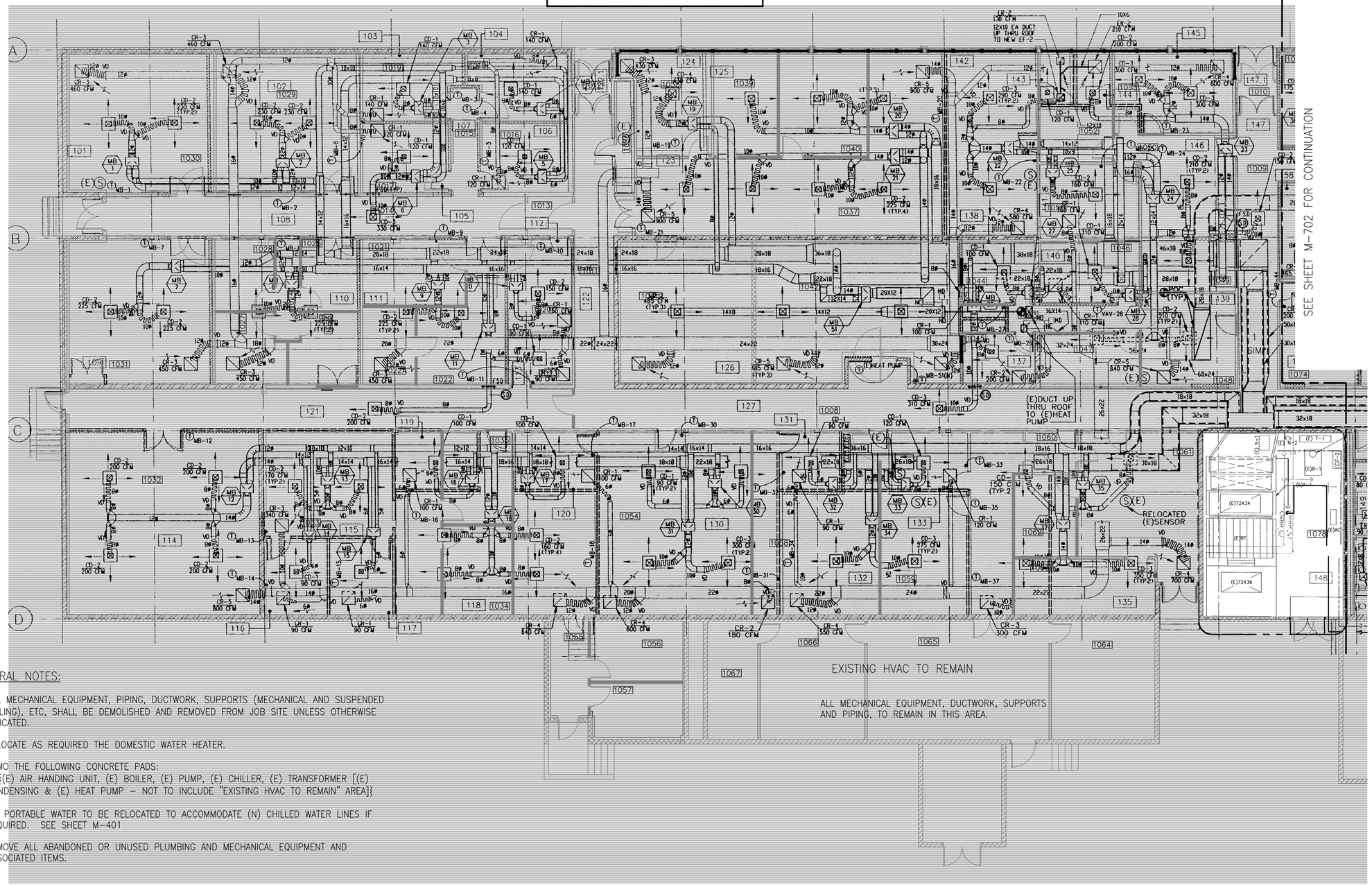

GENERAL NOTES:

1. ALL MECHANICAL EQUIPMENT, PIPING, DUCTWORK, SUPPORTS (MECHANICAL AND SUSPENDED CEILING), ETC, SHALL BE DEMOLISHED AND REMOVED FROM JOB SITE UNLESS OTHERWISE INDICATED.
2. RELOCATE AS REQUIRED THE DOMESTIC WATER HEATER.
3. DEMO THE FOLLOWING CONCRETE PADS:
   {(E) AIR HANDING UNIT, (E) BOILER, (E) PUMP, (E) CHILLER, (E) TRANSFORMER [(E) CONDENSING & (E) HEAT PUMP – NOT TO INCLUDE "EXISTING HVAC TO REMAIN" AREA]}
4. (E) PORTABLE WATER TO BE RELOCATED TO ACCOMMODATE (N) CHILLED WATER LINES IF REQUIRED. SEE SHEET M-401
5. REMOVE ALL ABANDONED OR UNUSED PLUMBING AND MECHANICAL EQUIPMENT AND ASSOCIATED ITEMS.

DEMOLITION MECHANICAL FLOOR PLAN – BUILDING 282 – AREA A

SCALE: 1/8" = 1'-0

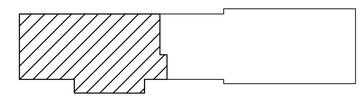

KEY PLAN
NTS

GRAPHIC SCALE

1/8"=1'-0" 0' 2' 4' 8' 16' 24'

REFERENCE NORTH

US Army Corps of Engineers
Sacramento District

Symbol	Description	Date	Approved

Designed by: A. MORITA
Dwn by: J. FRESCAS
Reviewed by: S.B.
Submitted by: Maj. Thomas E. Nissen, Chief, Mech./Elec. Des. Sec.
Date: 10/21/05
Rev.
Design file no: 229-25-539
Spec No.: 1304
Drawing Code:
File name: N39M-701xxx.dwg
Plot date:
Dwg scale: AS_NOTED

DEPARTMENT OF THE ARMY
CORPS OF ENGINEERS
SACRAMENTO, CALIFORNIA

SACRAMENTO DISTRICT
IN-HOUSE DESIGN
1325 J STREET
SACRAMENTO, CA 95814-2922

NELLIS AFB
NEVADA
F/A-22 ADD/ALTER WEAPONS SCHOOL
DEMOLITION MECHANICAL FLOOR PLAN
BUILDING 282
FLOOR PLAN AREA A

Sheet reference number:
M-701

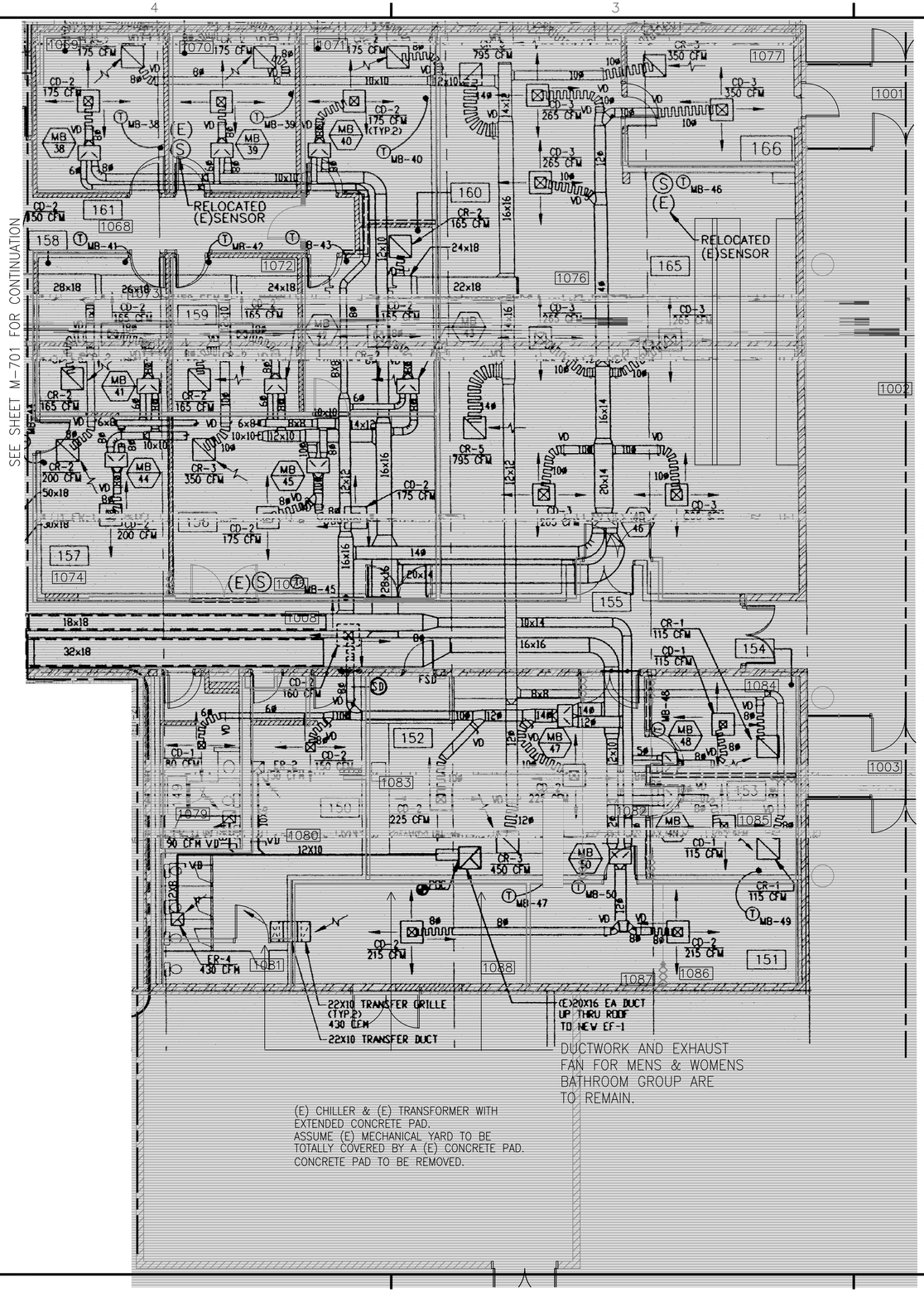

INFORMATION ONLY CONTRACTOR TO VERIFY DURING SITE VISIT

DEMOLITION MECHANICAL FLOOR PLAN – BUILDING 282 – AREA B

SCALE: 1/8" = 1'-0

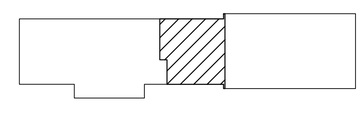

KEY PLAN

NTS

GRAPHIC SCALE

1/8"=1'-0" 0' 2' 4' 8' 16' 24'

REFERENCE

NORTH

US Army Corps of Engineers
Sacramento District

Symbol	Description	Date	Approved

Designed by: A. MORITA
Dwn by: J. FRESCAS
Reviewed by: S.B.
Submitted by: Thomas E. Nissen, Chief, Mech./Elec. Des. Sec.
Date: 10/21/05
Spec No.: 1304
Design file no: 229-25-539
Drawing Code:
File name: N39M-701xxx.dwg
Plot date:
Dwg scale: AS_NOTED
Rev.

DEPARTMENT OF THE ARMY
CORPS OF ENGINEERS
SACRAMENTO, CALIFORNIA

SACRAMENTO DISTRICT
IN-HOUSE DESIGN
1325 J STREET
SACRAMENTO, CA 95814-2922

NEVADA
NELLIS AFB
F/A-22 ADD/ALTER WEAPONS SCHOOL
DEMOLITION MECHANICAL FLOOR PLAN
BUILDING 282
FLOOR PLAN AREA B

Sheet reference number:
M-702

Border Revised 03/11/04, CDESIGN02.DWG

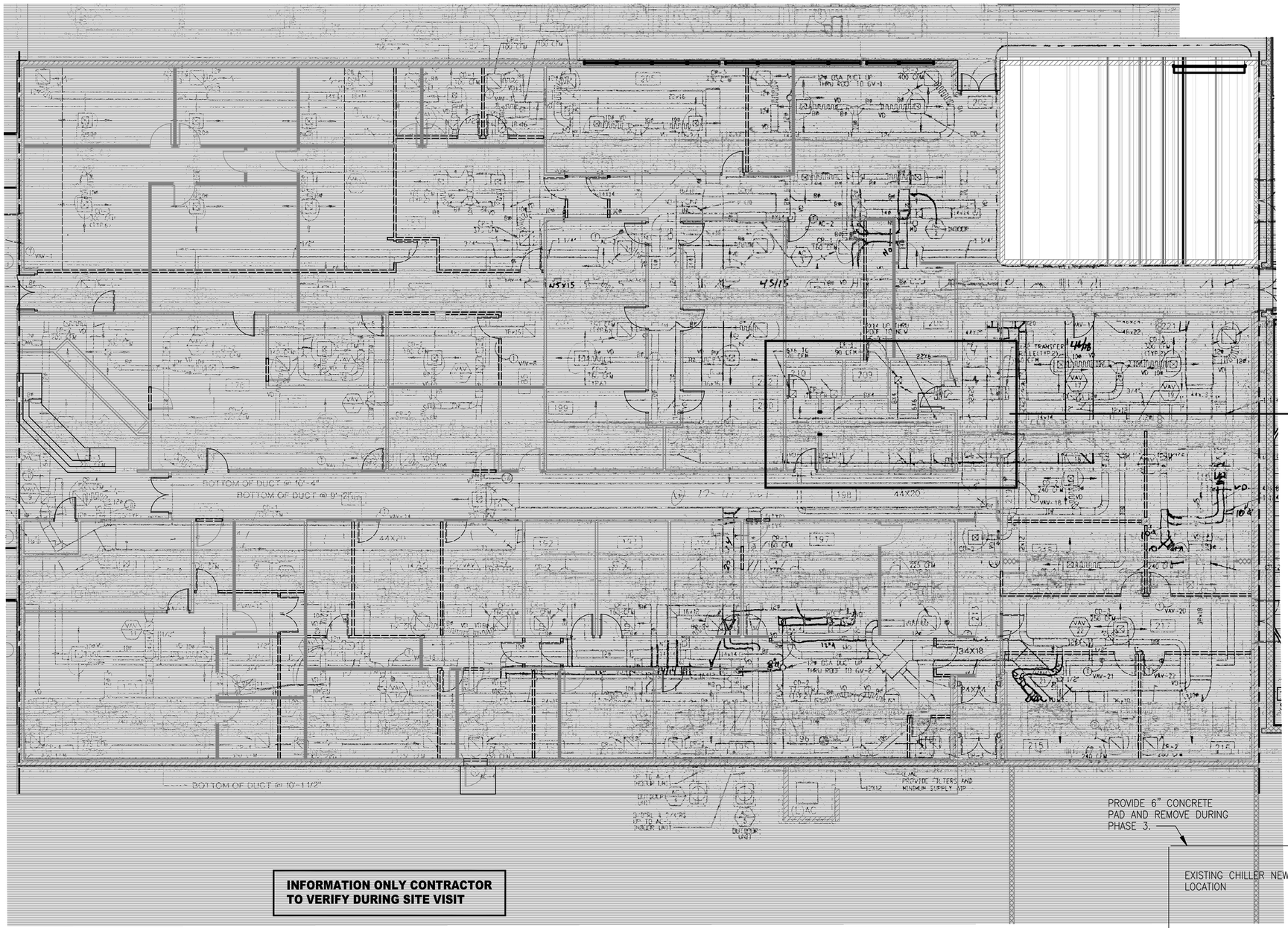

DUCTWORK AND EXHAUST FAN FOR MENS & WOMENS BATHROOM GROUP ARE TO REMAIN.

EXISTING CHILLER TO BE RELOCATED TO SOUTH OF BUILDING

PROVIDE 6" CONCRETE PAD AND REMOVE DURING PHASE 3.

EXISTING CHILLER NEW LOCATION

RELOCATION OF CHILLER TO BE DONE PER PHASE 1 PART 2. PROVIDE A NEW TEMPORARY 4-INCH CHILLED WATER SUPPLY AND RETURN TO BE LOCATED IN THE MECHANICAL ROOM 1143 AND RUN ABOVE THE ROOF TO THE NEW CHILLER LOCATION. CONNECTION WILL OCCUR DURING PHASE 1 PART 2. REMOVE CHILLER AND PIPING DURING PHASE 3.

DEMOLITION MECHANICAL FLOOR PLAN – BUILDING 282 – AREA C

SCALE: 1/8" = 1'-0

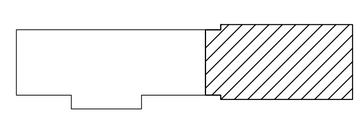

KEY PLAN
NTS

GRAPHIC SCALE
1/8"=1'-0" 0' 2' 4' 8' 16' 24'

REFERENCE
NORTH

US Army Corps of Engineers
Sacramento District

Symbol	Description	Date	Approved

Date: 10/21/05
Rev.
Spec. No.: 1304
Design file no: 229-25-539
Drawing Code:
File name: N39M-702xxx.dwg
Plot date:
Dwg scale: AS_NOTED

Designed by: A. MORITA
Dwn by: J. FRESCAS
Reviewed by: S.B.
Submitted by: Thomas E. Nilssen
Chief, Mech./Elec. Des. Sec.

DEPARTMENT OF THE ARMY
CORPS OF ENGINEERS
SACRAMENTO, CALIFORNIA

SACRAMENTO DISTRICT
IN-HOUSE DESIGN
1325 J STREET
SACRAMENTO, CA 95814-2922

NEVADA
NELLIS AFB
F/A-22 ADD/ALTER WEAPONS SCHOOL
DEMOLITION MECHANICAL FLOOR PLAN
BUILDING 282
FLOOR PLAN AREA C

Sheet reference number:
M-703

Border Revised 03/01/04, CEGHI32.DWG

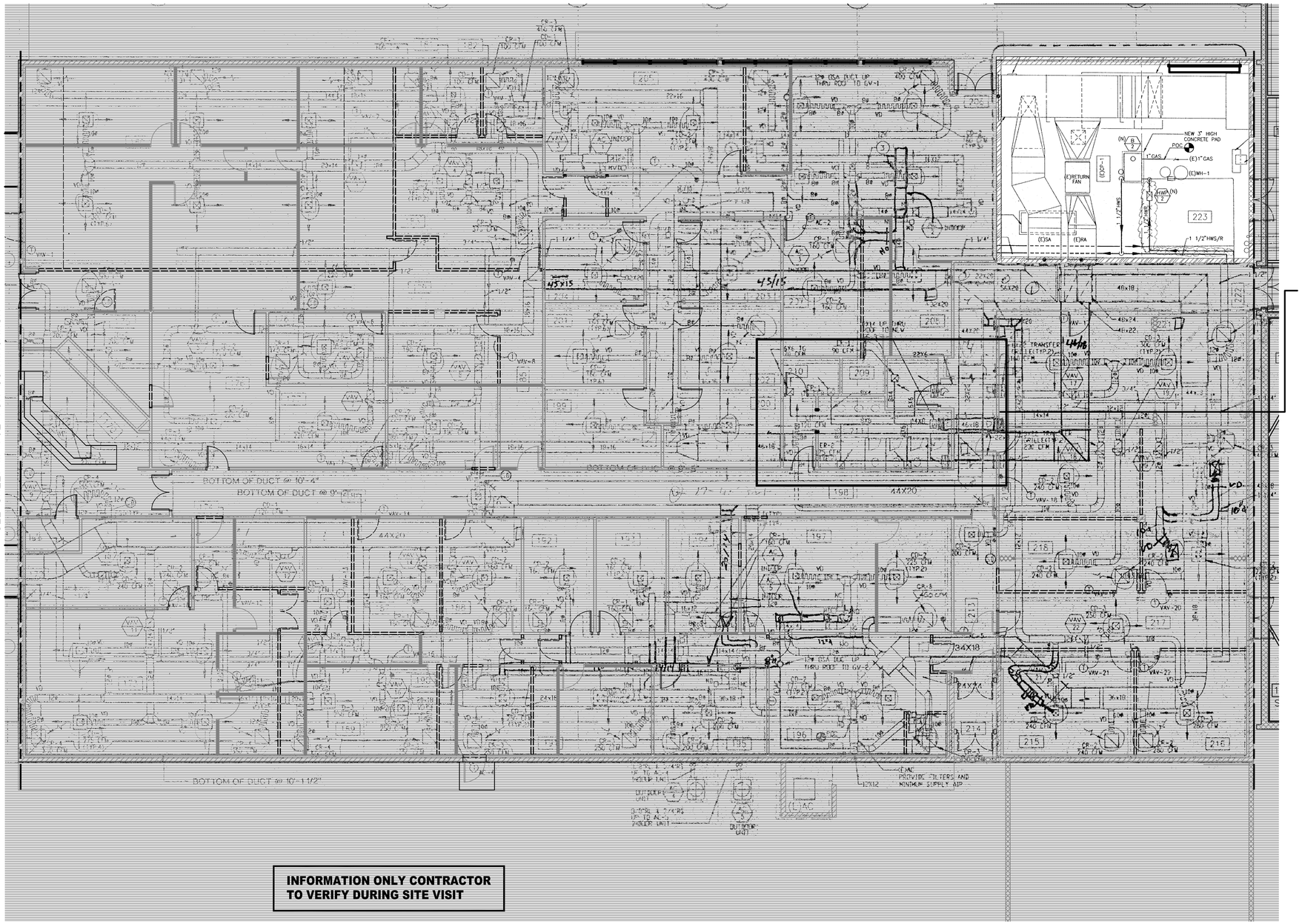

DUCTWORK AND EXHAUST FAN FOR MENS & WOMENS BATHROOM GROUP ARE TO REMAIN.

EXISTING CHILLER TO REMAIN UNTIL PHASE 3. CONTRACTOR CAN REMOVE OR ABANDON IN PLACE.

INFORMATION ONLY CONTRACTOR TO VERIFY DURING SITE VISIT

INFORMATION ON THIS SHEET IS INCLUDED IN BID OPTION 1

DEMOLITION MECHANICAL FLOOR PLAN – BUILDING 282 – AREA C

SCALE: 1/8" = 1'-0

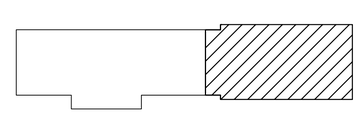

KEY PLAN
NTS

GRAPHIC SCALE

1/8"=1'-0" 0' 2' 4' 8' 16' 24'

REFERENCE NORTH

US Army Corps of Engineers
Sacramento District

Symbol	Description	Date	Approved

Rev.

Date: 10/21/05
Design file no:
Spec. No.: 1304
Drawing Code:
File name: N39M-702xxx.dwg
Plot date:
Dwg scale: AS_NOTED

Designed by: A. MORITA
Dwn by: J. FRESCAS
Reviewed by: S.B.
Submitted by: Thomas E. Nilssen
Chief, Mech./Elec. Sec.

DEPARTMENT OF THE ARMY
CORPS OF ENGINEERS
SACRAMENTO, CALIFORNIA

SACRAMENTO DISTRICT
IN-HOUSE DESIGN
1325 J STREET
SACRAMENTO, CA 95814-2922

NEVADA
NELLIS AFB
F/A-22 ADD/ALTER WEAPONS SCHOOL
DEMOLITION MECHANICAL FLOOR PLAN
BUILDING 282
FLOOR PLAN AREA C

Sheet reference number:
M-703A

Border Revised 03/01/04, CEGHN32.DWG

GENERAL CONTROL NOTES:

SHEETS M-801 THRU M-816 ARE TO BE USED FOR INFORMATIONAL PURPOSE ONLY. AT THE CONTRACTORS OWN RISK HE MAY REUSE EXISTING CONTROL DEVICES.

INFORMATION ONLY CONTRACTOR TO VERIFY DURING SITE VISIT SHT M-801 THRU M-816

BLDG 282

N2 NETWORK RISER

BILL OF MATERIAL

Designation	Qty	Part Number	Description
Field Devices:			
NAE	1	MS-NAE5511-0	NAE W/N2 BUS, MODEM, 24VAC, 50VA
Panel Devices:			
ENCLOSURE	1	PAN-ENC2024WDP	PANEL, HOFFMAN 20X24X9 PERF-SUB W/ DOOR
RC	1	PD-117-9	4IN S/S COVER W/ RECEP/SW/FUSE BOX

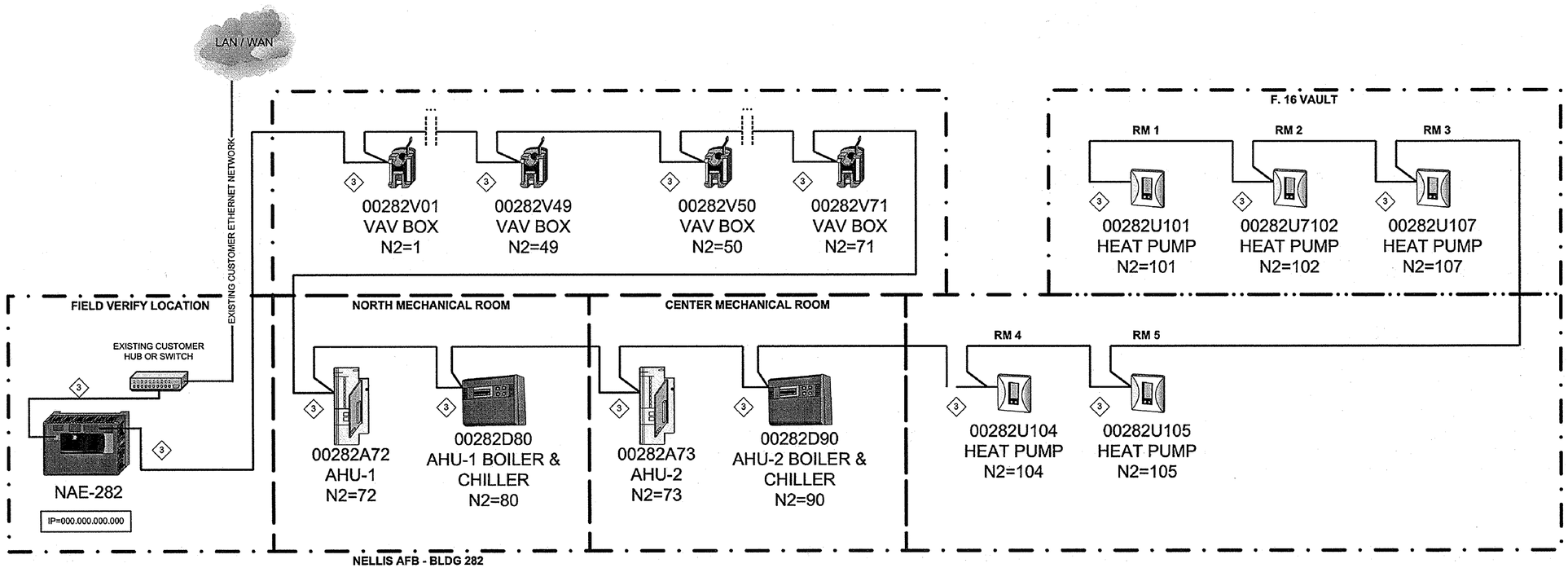

NAMING LEGEND:
#####X##
BUILDING CONTROLLER N2 ADDRESS
EXAMPLE : 00880A01

CONTROLLER LEGEND:
A - AHU
D - DX9100
U - UNT
T - TEC
I - INTEGRATOR
X - XT

WIRING LEGEND

ETHERNET
N2
MSTP
LON

KEYED NOTES: ◇

1. Not used.
2. Not used.
3. All control cables to follow Metasys standard wire colors.

REVISION INFORMATION	Drawing Title	REFERENCE DRAWING	NO.	REVISION-LOCATION	ECN	DATE	BY
NUMBER: number	**Bldg 282 N2 Network Riser Network Controlller N30**		1	As-Built		7/28/2004	A.B.
DATE: 07/29/04		Sales Engineer: Waters / Project Manager: Reed / Application Engineer: Radlovic		DRAWN: BY R.R. DATE 7/28/2004		APPROVED: BY K.S. DATE 7/28/2004	
TIME: 04:10 PM	Project Title: **Nellis AFB ESPC Energy Savings Performance Contract Las Vegas, Nevada**	JOHNSON CONTROLS Systems & Services Division		Branch Information: Johnson Controls, Inc. 3579 Redrock St. Suite B Las Vegas, NV 89103 Phone: (702) 798-1979 Fax: (702) 798-7621		CONTRACT NUMBER: **3307-0028**	
extra						DRAWING NUMBER: **NR-282-1**	
FILE NAME: NR-282-1.vsd							

US Army Corps of Engineers
Sacramento District

Symbol	Description	Date	Approved

Designed by: A.M.
Dwn by: J.F.
Spec No.: 1304
Design file no: 229-25-539
Drawing Code: 1004
Rev:
Date:
File name: N29M-801XXX.dwg
Plot date: 07/14/2003
Dwg scale: AS NOTED
Reviewed by: S.B.
Submitted by: A. Mitchell
Chief, Mech/Elec Des. Sec.

DEPARTMENT OF THE ARMY
CORPS OF ENGINEERS
SACRAMENTO, CALIFORNIA

SACRAMENTO DISTRICT
IN-HOUSE DESIGN
1325 "J" STREET
SACRAMENTO, CA 95814-2922

NEVADA
NELLIS AFB
F/A-22 ADD/ALTER WEAPONS SCHOOL

EXISTING JOHNSON CONTROLS IN BLDG 282

Sheet reference number:
M-801

SINGLEZONE VAV AHU

BLDG 282 - TYP OF 2

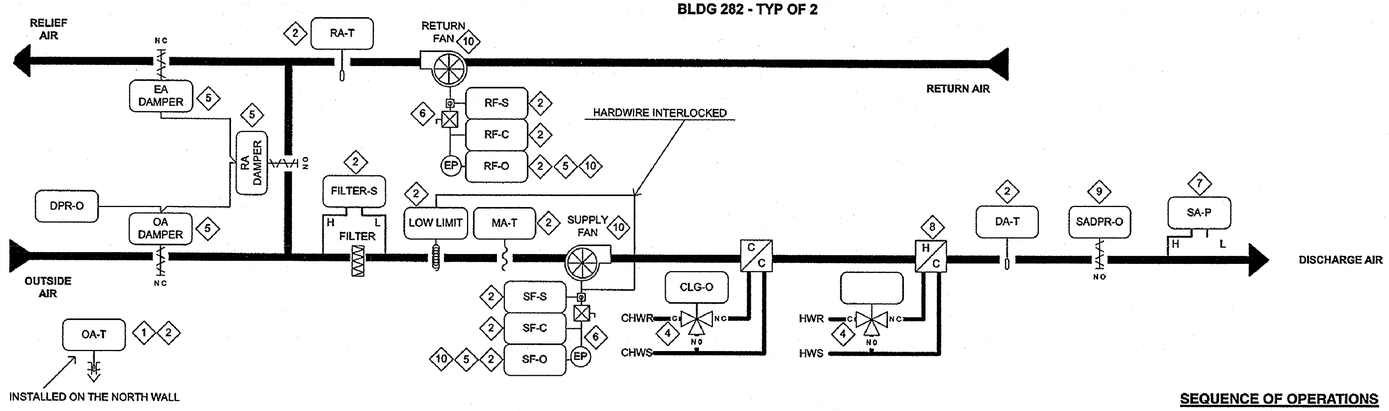

BILL OF MATERIAL

Designation	Qty	Part Number	Description
Field Devices:			
FILTER-S	2	FTG18A-600R	SENSING TUBE KIT, F/P32
	2	P32AC-2C	PRESS SW,DP,SPDT,5IN WC,U-BRKT
LOW LIMIT	2	A70AA-16C	STAT,LL,20FT ELEMENT,AUTO,15/55F
	20	TE-6001-8	CLIP F/AVG ELEMENT,10-PACK
MA-T	20	TE-6001-8	CLIP F/AVG ELEMENT,10-PACK
	2	TE-6316P-1	SENSOR,T-NI,0.1%,17FT AVG
OA-T	1	TE-6313P-1	SENSOR,T-NI,0.1%,3IN OAT
RA-T, DA-T	4	TE-6311P-1	SENSOR,T-NI,0.1%,8IN DUCT
SA-P	2	21118	6IN STATIC PRESS PROBE
	2	DPT2641-005D	XMTR,DIFF PR,AIR,0 TO 5"WC,4-20MA,0.5%
SF-C, RF-C	4	RIBU1S	10AMP SPST-NO+HOA 10-30VAC/DC/120VAC
SF-S, RF-S	4	H908	SW,CURRENT,3-135A,ADJ,SPLIT
Panel Devices:			
AHU Controller	2	PAAPB	STD PANEL ASSY - AHU IN HOFFMAN ENCL
SF-O, RF-O	2	EP2101S1	EP TRANS, LCD, OVRIDE,AUTO-MAN SW,VENT

SEQUENCE OF OPERATIONS

SUPPLY AND RETURN FAN CONTROL:
During the occupied hours the supply fan is commanded on or off (SF-C) either through the BAS schedule or through the override command from the operator workstation (OWS). The return fan shall be started (RF-C) after the supply fan running status (SF-S) is confirmed.
During the unoccupied hours both the supply fans are off (SF-C and RF-C) unless any zone temperature decreases below 55°F (adjustable) or increases above 85°F (adjustable). The fans are turned off again when the zone temperature is 60°F (adjustable) and 80°F (adjustable) respectively.
10 The supply fan variable inlet vanes (SF-O) are modulated to maintain AHU-1's supply air static pressure (SA-P) setpoint of 1.5" WC (adjustable). The return fan variable inlet vanes (RF-O) are modulated to track the supply fan variable inlet vanes at the 80% level (adjustable).
9 The supply damper (SADPR-O) is modulated to maintain AHU-2's supply air static pressure (SA-P) setpoint of 1.5" WC (adjustable).
BAS is monitoring both the supply fan status (SF-S) and the return fan status (RF-S).

ECONOMIZER TEMPERATURE CONTROL:
The economizer routine will be enabled if the outside air temperature (OA-T) is 5°F (adjustable) cooler than the return air temperature (RA-T). The economizer dampers (DPR-O) will modulate to maintain a cold deck air temperature (CD-T) setpoint. The return air temperature (RA-T) shall reset the discharge air temperature (DA-T) setpoint. If the economizer routine is not available the outside air damper will remain at its minimum position and the return air damper will remain at its maximum position.

OUTSIDE AIR TEMPERATURE CONTROL:
If the outside air temperature (OA-T) is below the cooling setpoint 60°F (adjustable), cooling lockout status is on, indicating cooling is unavailable.
Mixed air temperature low limit logic shall prevent mixed air temperature (MA-T) from dropping below 40°F (adjustable) by closing the outside air damper (OA DAMPER of DPR-O). The low limit thermostat (LOW LIMIT) is interlocked to the supply fan starter (SF-C) and it is set up for 38°F.

DAMPER AND VALVE CONTROL (SUPPLY FAN OFF):
The outside air and exhaust air dampers (DPR-O) shall be closed and the return air damper (DPR-O) shall be open when the fan is off (SF-S). The cooling coil valve (CLG-O) shall be closed when the fan is off (SF-S). The heating coil valve (HTG-O) shall be closed when the fan (SF-S) is off, too.

HEATING VALVE AND COOLING VALVE CONTROL:
When the system is not in economizer mode then the cooling coil valve (CLG-O) is modulated in sequence to maintain the discharge air temperature (DA-T) setpoint of 55°F (adjustable). The return air temperature (RA-T) shall reset the discharge air temperature (DA-T) setpoint. During the unoccupied mode, the system determines cooling if the outside air temperature (OA-T) rises above 75 °F (adjustable) and heating if the outside air temperature (OA-T) drops below 65 °F (adjustable).

AHU-1 CONTROL PANEL
LOCATED IN NORTH MECHANICAL ROOM

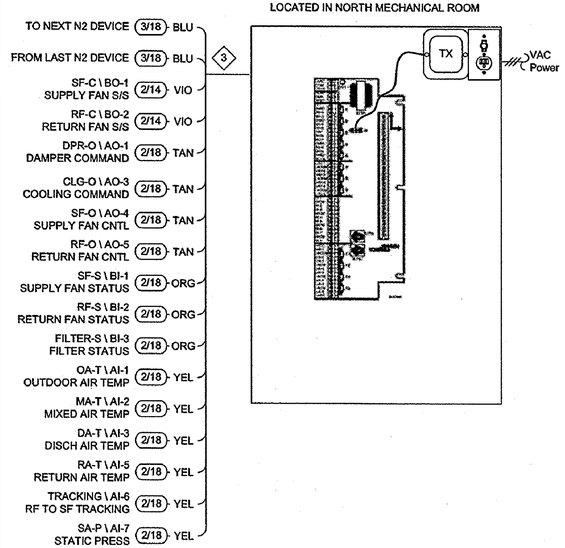

AHU-2 CONTROL PANEL
LOCATED IN CENTER MECHANICAL ROOM

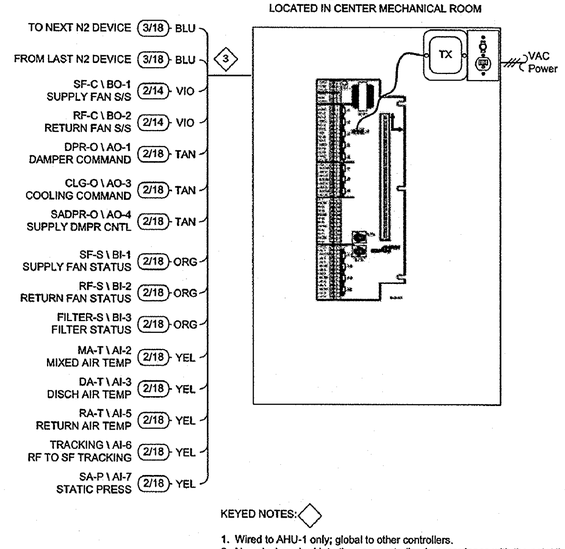

KEYED NOTES:

1. Wired to AHU-1 only; global to other controllers.
2. New device wired into the new controller, in accordance with the point list. Old devices disconnected and abandoned in place.
3. All control cables to follow Metasys standard wire colors.
4. Existing valves, pneumatic and electronic valve actuators.
5. Existing dampers, electronic economizer damper actuators and pneumatic variable inlet vane actuators.
6. Existing starter, HOA switch, overloads, disconnect switch, smoke detector, all high voltage wiring, and fuses.
7. New device, installed downstream at 2/3 of the run of the longest duct.
8. Heating coils abandoned in place.
9. Supply damper control typical for AHU-2 only.
10. Supply vanes typical for AHU-1 only.

REVISION INFORMATION	Drawing Title	REFERENCE DRAWING	NO.	REVISION-LOCATION	ECN	DATE	BY
NUMBER: number	Singlezone VAV AHU Bldg 282 - Typ of 2 Flow Diagram		1	As-Built		7/28/2004	A.B.
DATE: 07/28/04		Sales Engineer: Waters	Project Manager: Reed	Application Engineer: Radlovic	DRAWN: BY R.R. DATE 7/28/2004	APPROVED: BY K.S. DATE 7/28/2004	
TIME: 11:26 AM	Project Title: Nellis AFB ESPC Energy Savings Performance Contract Las Vegas, Nevada	JOHNSON CONTROLS Systems & Services Division		Branch Information: Johnson Controls, Inc. 3579 Redrock St. Suite B Las Vegas, NV 89103 Phone: (702) 798-1979 Fax: (702) 798-7621	CONTRACT NUMBER: 3307-0028		
extra					DRAWING NUMBER: AH-1-1		
FILE NAME: AH-1-1.vsd							

US Army Corps of Engineers
Sacramento District

Symbol	Description	Date	Approved

Designed by: A.M.
Dwn by: J.F.
Reviewed by: S.B.
Submitted by: W. NESS
Chief, Mech/Elec. Des. Sec.
Date:
Spec. No.: 1304
Design file no: 229-25-539
Drawing Code: 100%
File name: N39M-802XXX.dwg
Plot date: 07/28/2004
Dwg scale: AS NOTED
Rev.

DEPARTMENT OF THE ARMY
CORPS OF ENGINEERS
SACRAMENTO, CALIFORNIA

SACRAMENTO DISTRICT
IN-HOUSE DESIGN
1325 "J" STREET
SACRAMENTO, CA 95814-2922

NELLIS AFB — NEVADA

F/A-22 ADD/ALTER WEAPONS SCHOOL

EXISTING JOHNSON CONTROLS IN BLDG 282

Sheet reference number: M-802

Border Revised: 01/07/02, CCESIGN02.DWG

	Point Information				Controller Information									Panel Information					Intermediate Device					Field Device						
Tag	Point Type	System Name	Object Name	Expanded ID	Controller Type	Controller Details	Trunk Type	Trunk Nbr	Trunk Addr.	Cable Destination Bay/Terminal	DO Type	Module Type	Termination Out	Panel	Panel Location	Slot Number	Reference Drawing	Cable Number	Wiring /Tubing	Termination In	Device	Termination Out	Location	Wiring /Tubing	Termination In	Device	Location	Ref Detail Stencil Name	Ref Detail Shape	Comment
		AHU-1			AHU	AHU 100								AHU-1	Mech Room		AH-1-1													Power to Controller
		AHU-1			AHU	AHU 100	N2	1	72					AHU-1	Mech Room	0	AH-1-1													N2 Trunk
	BO-1	AHU-1	SF-C	Supply Fan S/S	AHU	AHU 100	N2	1	72	BO-1			BO1,24V	AHU-1	Mech Room	0	AH-1-1	SF-C	2/18 VIO	COIL (Wh/Yel,Wh/Blue)	RIB Relay	COM, NO (Yel, Org)		2/14	See wiring detail	Starter (NO)		AHU-RD.VSS	A402	
	BO-2	AHU-1	RF-C	Return Fan S/S	AHU	AHU 100	N2	1	72	BO-2			BO2,24V	AHU-1	Mech Room	0	AH-1-1	RF-C	2/18 VIO	COIL (Wh/Yel,Wh/Blue)	RIB Relay	COM, NO (Yel, Org)		2/14	See wiring detail	Starter (NO)		AHU-RD.VSS	A402	
	BO-3	AHU-1			AHU	AHU 100	N2	1	72	BO-3				AHU-1	Mech Room	0	AH-1-1													
	BO-4	AHU-1			AHU	AHU 100	N2	1	72	BO-4				AHU-1	Mech Room	0	AH-1-1													
	BO-5	AHU-1			AHU	AHU 100	N2	1	72	BO-5				AHU-1	Mech Room	0	AH-1-1													
	BO-6	AHU-1			AHU	AHU 100	N2	1	72	BO-6				AHU-1	Mech Room	0	AH-1-1													
	BO-7	AHU-1			AHU	AHU 100	N2	1	72	BO-7				AHU-1	Mech Room	0	AH-1-1													
	BO-8	AHU-1			AHU	AHU 100	N2	1	72	BO-8				AHU-1	Mech Room	0	AH-1-1													
	BO-9	AHU-1			AHU	AHU 100	N2	1	72	BO-9				AHU-1	Mech Room	0	AH-1-1													
	BO-10	AHU-1			AHU	AHU 100	N2	1	72	BO-10				AHU-1	Mech Room	0	AH-1-1													
	AO-1	AHU-1	DPR-O	Damper Command	AHU	AHU 100	N2	1	72	AO-1			AO1,AOCM,24V	AHU-1	Mech Room	0	AH-1-1	DPR-O	3/18 TAN					3/18	3, 1, 2	AF24-SR (Int Source)		AHU-RD.VSS	A232	
	AO-2	AHU-1			AHU	AHU 100	N2	1	72	AO-2				AHU-1	Mech Room	0	AH-1-1													
	AO-3	AHU-1	CLG-O	Cooling Command	AHU	AHU 100	N2	1	72	AO-3			AO3,AOCM,24V	AHU-1	Mech Room	0	AH-1-1	CLG-O	3/18 TAN					3/18	3, 1, 2	AF24-SR (Int Source)		AHU-RD.VSS	A232	
	AO-4	AHU-1	SF-O	Supply Fan Cntl	AHU	AHU 100	N2	1	72	AO-4			AO4,AOCM,24V	AHU-1	Mech Room	0	AH-1-1	SF-O	3/18 TAN	See Wiring Detail	EP2101S1	S, O		1/4"	Barb Fitting	Pneu. Actuator		AHU-RD.VSS	A218	
	AO-5	AHU-1	RF-O	Return Fan Cntl	AHU	AHU 100	N2	1	72	AO-5			AO5,AOCM,24V	AHU-1	Mech Room	0	AH-1-1	RF-O	3/18 TAN	See Wiring Detail	EP2101S1	S, O		1/4"	Barb Fitting	Pneu. Actuator		AHU-RD.VSS	A218	
	AO-6	AHU-1			AHU	AHU 100	N2	1	72	AO-6				AHU-1	Mech Room	0	AH-1-1													
	BI-1	AHU-1	SF-S	Supply Fan Status	AHU	AHU 100	N2	1	72	BI-1			BI1,BICM	AHU-1	Mech Room	0	AH-1-1	SF-S	2/18 ORG	OUT, COM	Veris Current Relay	Motor Lead		2/18	See wiring detail	Motor Status		AHU-RD.VSS	A301	
	BI-2	AHU-1	RF-S	Return Fan Status	AHU	AHU 100	N2	1	72	BI-2			BI2,BICM	AHU-1	Mech Room	0	AH-1-1	RF-S	2/18 ORG	OUT, COM	Veris Current Relay	Motor Lead		2/18	See wiring detail	Motor Status		AHU-RD.VSS	A301	
	BI-3	AHU-1	FILTER-S	Filter Status	AHU	AHU 100	N2	1	72	BI-3			BI3,BICM	AHU-1	Mech Room	0	AH-1-1	FILTER-S						2/18	Y,R	P32 (NO)		AHU-RD.VSS	A301	
	BI-4	AHU-1			AHU	AHU 100	N2	1	72	BI-4				AHU-1	Mech Room	0	AH-1-1													
	BI-5	AHU-1			AHU	AHU 100	N2	1	72	BI-5				AHU-1	Mech Room	0	AH-1-1													
	BI-6	AHU-1			AHU	AHU 100	N2	1	72	BI-6				AHU-1	Mech Room	0	AH-1-1													
	BI-7	AHU-1			AHU	AHU 100	N2	1	72	BI-7				AHU-1	Mech Room	0	AH-1-1													
	BI-8	AHU-1			AHU	AHU 100	N2	1	72	BI-8				AHU-1	Mech Room	0	AH-1-1													
	AI-1	AHU-1	OA-T	Outdoor Air Temp	AHU	AHU 100	N2	1	72	AI-1			AI1,AICM	AHU-1	Mech Room	0	AH-1-1	OA-T						2/18	2-Wire	TE		AHU-RD.VSS	A131	
	AI-2	AHU-1	MA-T	Mixed Air Temp	AHU	AHU 100	N2	1	72	AI-2			AI2,AICM	AHU-1	Mech Room	0	AH-1-1	MA-T						2/18	2-Wire	TE		AHU-RD.VSS	A131	
	AI-3	AHU-1	DA-T	Disch Air Temp	AHU	AHU 100	N2	1	72	AI-3			AI3,AICM	AHU-1	Mech Room	0	AH-1-1	DA-T						2/18	2-Wire	TE		AHU-RD.VSS	A131	
	AI-4	AHU-1			AHU	AHU 100	N2	1	72	AI-4				AHU-1	Mech Room	0	AH-1-1													
	AI-5	AHU-1	RA-T	Return Air Temp	AHU	AHU 100	N2	1	72	AI-5			AI5,AICM	AHU-1	Mech Room	0	AH-1-1	RA-T						2/18	2-Wire	TE		AHU-RD.VSS	A131	
	AI-6	AHU-1	TRACKING	RF to SF Tracking	AHU	AHU 100	N2	1	72	AI-6			AI6,AICM	AHU-1	Mech Room	0	AH-1-1	TRACKING						2/18	AO#,AOCM	0-20mA (Input from Output)		AHU-RD.VSS	A203	
	AI-7	AHU-1	SA-P	Static Press	AHU	AHU 100	N2	1	72	AI-7			AI7,+VDC	AHU-1	Mech Room	0	AH-1-1	SA-P						2/18	-, +	DPT2xxx (mA)		AHU-RD.VSS	A106	
	AI-8	AHU-1			AHU	AHU 100	N2	1	72	AI-8				AHU-1	Mech Room	0	AH-1-1													
		AHU-2			AHU	AHU 100								AHU-2	Mech Room		AH-1-1													Power to Controller
		AHU-2			AHU	AHU 100	N2	1	73					AHU-2	Mech Room	0	AH-1-1													N2 Trunk
	BO-1	AHU-2	SF-C	Supply Fan S/S	AHU	AHU 100	N2	1	73	BO-1			BO1,24V	AHU-2	Mech Room	0	AH-1-1	SF-C	2/18 VIO	COIL (Wh/Yel,Wh/Blue)	RIB Relay	COM, NO (Yel, Org)		2/14	See wiring detail	Starter (NO)		AHU-RD.VSS	A402	
	BO-2	AHU-2	RF-C	Return Fan S/S	AHU	AHU 100	N2	1	73	BO-2			BO2,24V	AHU-2	Mech Room	0	AH-1-1	RF-C	2/18 VIO	COIL (Wh/Yel,Wh/Blue)	RIB Relay	COM, NO (Yel, Org)		2/14	See wiring detail	Starter (NO)		AHU-RD.VSS	A402	
	BO-3	AHU-2			AHU	AHU 100	N2	1	73	BO-3				AHU-2	Mech Room	0	AH-1-1													
	BO-4	AHU-2			AHU	AHU 100	N2	1	73	BO-4				AHU-2	Mech Room	0	AH-1-1													
	BO-5	AHU-2			AHU	AHU 100	N2	1	73	BO-5				AHU-2	Mech Room	0	AH-1-1													
	BO-6	AHU-2			AHU	AHU 100	N2	1	73	BO-6				AHU-2	Mech Room	0	AH-1-1													
	BO-7	AHU-2			AHU	AHU 100	N2	1	73	BO-7				AHU-2	Mech Room	0	AH-1-1													
	BO-8	AHU-2			AHU	AHU 100	N2	1	73	BO-8				AHU-2	Mech Room	0	AH-1-1													
	BO-9	AHU-2			AHU	AHU 100	N2	1	73	BO-9				AHU-2	Mech Room	0	AH-1-1													
	BO-10	AHU-2			AHU	AHU 100	N2	1	73	BO-10				AHU-2	Mech Room	0	AH-1-1													
	AO-1	AHU-2	DPR-O	Damper Command	AHU	AHU 100	N2	1	73	AO-1			AO1,AOCM,24V	AHU-2	Mech Room	0	AH-1-1	DPR-O	3/18 TAN					3/18	3, 1, 2	AF24-SR (Int Source)		AHU-RD.VSS	A232	
	AO-2	AHU-2			AHU	AHU 100	N2	1	73	AO-2				AHU-2	Mech Room	0	AH-1-1													
	AO-3	AHU-2	CLG-O	Cooling Command	AHU	AHU 100	N2	1	73	AO-3			AO3,AOCM,24V	AHU-2	Mech Room	0	AH-1-1	CLG-O	3/18 TAN					3/18	3, 1, 2	AF24-SR (Int Source)		AHU-RD.VSS	A232	
	AO-4	AHU-2	SADPR-O	Supply Dmpr Cntl	AHU	AHU 100	N2	1	73	AO-4			AO4,AOCM,24V	AHU-2	Mech Room	0	AH-1-1	SADPR-O	3/18 TAN	See Wiring Detail	EP2101S1	S, O		1/4"	3, 1, 2	AF24-SR (Int Source)		AHU-RD.VSS	A232	
	AO-5	AHU-2			AHU	AHU 100	N2	1	73	AO-5				AHU-2	Mech Room	0	AH-1-1													
	AO-6	AHU-2			AHU	AHU 100	N2	1	73	AO-6				AHU-2	Mech Room	0	AH-1-1													
	BI-1	AHU-2	SF-S	Supply Fan Status	AHU	AHU 100	N2	1	73	BI-1			BI1,BICM	AHU-2	Mech Room	0	AH-1-1	SF-S	2/18 ORG	OUT, COM	Veris Current Relay	Motor Lead		2/18	See wiring detail	Motor Status		AHU-RD.VSS	A301	
	BI-2	AHU-2	RF-S	Return Fan Status	AHU	AHU 100	N2	1	73	BI-2			BI2,BICM	AHU-2	Mech Room	0	AH-1-1	RF-S	2/18 ORG	OUT, COM	Veris Current Relay	Motor Lead		2/18	See wiring detail	Motor Status		AHU-RD.VSS	A301	
	BI-3	AHU-2	FILTER-S	Filter Status	AHU	AHU 100	N2	1	73	BI-3			BI3,BICM	AHU-2	Mech Room	0	AH-1-1	FILTER-S						2/18	Y,R	P32 (NO)		AHU-RD.VSS	A301	
	BI-4	AHU-2			AHU	AHU 100	N2	1	73	BI-4				AHU-2	Mech Room	0	AH-1-1													
	BI-5	AHU-2			AHU	AHU 100	N2	1	73	BI-5				AHU-2	Mech Room	0	AH-1-1													
	BI-6	AHU-2			AHU	AHU 100	N2	1	73	BI-6				AHU-2	Mech Room	0	AH-1-1													
	BI-7	AHU-2			AHU	AHU 100	N2	1	73	BI-7				AHU-2	Mech Room	0	AH-1-1													
	BI-8	AHU-2			AHU	AHU 100	N2	1	73	BI-8				AHU-2	Mech Room	0	AH-1-1													
	AI-1	AHU-2			AHU	AHU 100	N2	1	73	AI-1				AHU-2	Mech Room	0	AH-1-1													
	AI-2	AHU-2	MA-T	Mixed Air Temp	AHU	AHU 100	N2	1	73	AI-2			AI2,AICM	AHU-2	Mech Room	0	AH-1-1	MA-T						2/18	2-Wire	TE		AHU-RD.VSS	A131	
	AI-3	AHU-2	DA-T	Disch Air Temp	AHU	AHU 100	N2	1	73	AI-3				AHU-2	Mech Room	0	AH-1-1	DA-T						2/18						
	AI-4	AHU-2			AHU	AHU 100	N2	1	73	AI-4				AHU-2	Mech Room	0	AH-1-1													
	AI-5	AHU-2	RA-T	Return Air Temp	AHU	AHU 100	N2	1	73	AI-5			AI5,AICM	AHU-2	Mech Room	0	AH-1-1	RA-T						2/18	2-Wire	TE		AHU-RD.VSS	A131	
	AI-6	AHU-2			AHU	AHU 100	N2	1	73	AI-6				AHU-2	Mech Room	0	AH-1-1													
	AI-7	AHU-2	SA-P	Static Press	AHU	AHU 100	N2	1	73	AI-7			AI7,+VDC	AHU-2	Mech Room	0	AH-1-1	SA-P						2/18	-, +	DPT2xxx (mA)		AHU-RD.VSS	A106	
	AI-8	AHU-2			AHU	AHU 100	N2	1	73	AI-8				AHU-2	Mech Room	0	AH-1-1													

SINGLEZONE VAV AHU

BLDG 282 - TYP OF 2

REVISION INFORMATION	Drawing Title						
NUMBER: number	Singlezone VAV AHU Bldg 282 - Typ of 2 Point Schedule		1	As-Built		7/28/2004	A.B.
DATE: 07/28/04		REFERENCE DRAWING	NO.	REVISION-LOCATION	ECN	DATE	BY
		Sales Engineer: Waters	Project Manager: Reed	Application Engineer: Radlovic	DRAWN: BY R.R. DATE 7/28/2004	APPROVED: BY K.S. DATE 7/28/2004	
TIME: 11:10 AM	Project Title						
extra	Nellis AFB ESPC Energy Savings Performance Contract Las Vegas, Nevada	JOHNSON CONTROLS Systems & Services Division		Branch Information Johnson Controls, Inc. 3579 Redrock St. Suite B Las Vegas, NV 89103 Phone: (702) 798-1979 Fax: (702) 798-7621	CONTRACT NUMBER 3307-0028		
FILE NAME: AH-1-2.vsd					DRAWING NUMBER AH-1-2		

US Army Corps of Engineers
Sacramento District

Symbol | Description | Date | Approved

Designed by: A.M.		Date:	Rev.
Dwn by: J.F.	Spec No.: 1304	Design file no: 229-25-539	
Reviewed by: S.B.		Drawing Code: 100%	
Submitted by: /s/ T NISSEN Chief, Mech/Elec Des. Sec.		File name: N39M-803XXX.dwg Plot date: 02/04/02 Dwg scale: AS NOTED	

DEPARTMENT OF THE ARMY
CORPS OF ENGINEERS
SACRAMENTO, CALIFORNIA

SACRAMENTO DISTRICT
IN-HOUSE DESIGN
1325 'J' STREET
SACRAMENTO, CA 95814-2922

NELLIA AFB NEVADA

F/A-22 ADD/ALTER WEAPONS SCHOOL

EXISTING JOHNSON CONTROLS IN BLDG 282

Sheet reference number:
M-803

DETAIL A131 — TEMPERATURE SENSOR INPUT

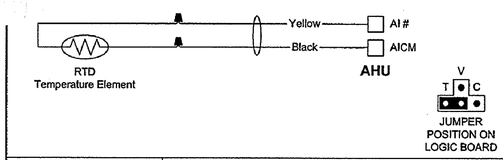

DETAIL A106 — CURRENT INPUT - INTERNAL SOURCE (2 Wire)

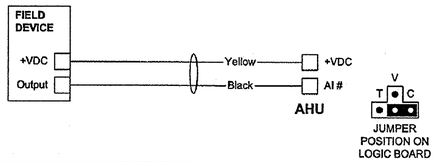

DETAIL A203 — ANALOG OUTPUT to ANALOG INPUT

Note that the Analog Output Common and Analog Input Common are the same within a single controller.

If this is used between two controllers, ensure that the controllers have a common 24Vac connection.

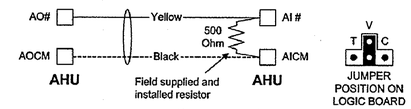

DETAIL A301 — BINARY INPUT (DRY CONTACT)

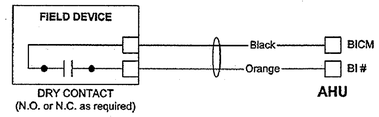

DETAIL A232 — 0-20mA OUTPUT to BELIMO xx24-SR

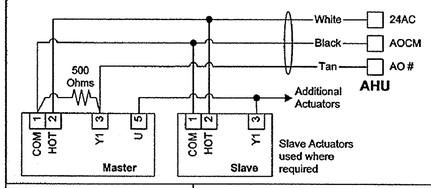

DETAIL A218 — 0-20mA OUTPUT to EP2101S1

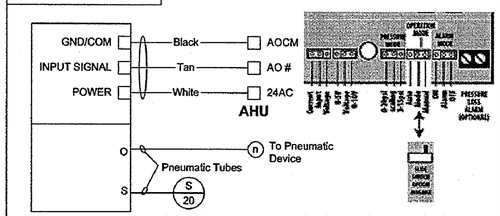

DETAIL A402 — 24 VAC BINARY OUTPUT to LOW CURRENT DRAW DEVICE

(Use when current draw of the Field Device is less than 50 mA)

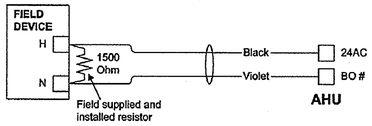

DETAIL WIRE:

METASYS STANDARD WIRE COLOR CODING CONVENTION

Type	Cable Color	Conductor Number	Conductor Color	Use	Notes
AI	Yellow	1	Yellow (Yel)	Analog Input	
		2	Black (Blk)	Com or +VDC	
		3	White (Wht)	+VDC	If Used
AO	Tan	1	Tan	Analog Output	
		2	Black (Blk)	Com or +VDC	
		3	White (Wht)	+VDC	If Used
BI / DI	Orange	1	Orange (Org)	Binary Input	
		2	Black (Blk)	Common	
BO / DO	Violet	1	Violet (Vlt)	Binary Output	
		2	Black (Blk)	Com or +VDC	
N2 Bus	Blue	1	Blue (Blu)	N2 +	
		2	Black (Blk)	N2 -	
		3	White (Wht)	N2 Ref	
N1 Bus (RG62)	Purple	1	N/A	N1	Bare Copper Center
		2	N/A	N1	Braid Copper Shield
24 VAC	Gray	1	Gray (Gry)	+24 VAC	
		2	Black (Blk)	24 VAC Com	
General Purpose	Natural	1	White (Wht)	I/O or General	
		2	Black (Blk)	Com or General	
		3	Red	General	If Used

NOTE: THIS TABLE OUTLINES THE GENERAL IDEA OF THE METASYS STANDARD WIRE COLORS. SOME APPLICATIONS MAY NOT FIT THE METASYS STANDARD COLOR CODING CONVENTION. MODIFY WHEN APPROPRIATE.

DETAIL N2:

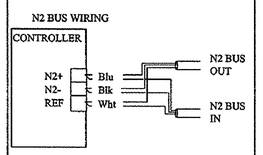

DETAIL SHIELD:

METASYS STANDARD CABLE SHIELD GROUNDING

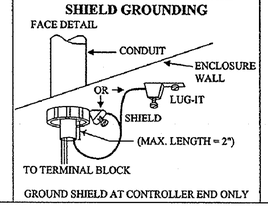

DETAIL AHU:

AHU TERMINATION DETAIL

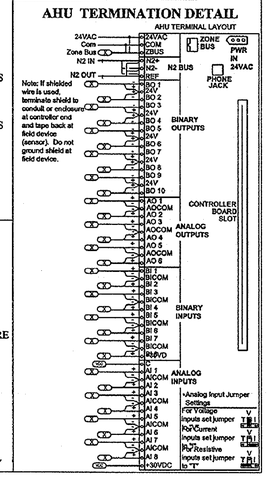

SINGLEZONE VAV AHU

BLDG 282 - TYP OF 2

1	As-Built			7/28/2004	A.B.
REFERENCE DRAWING	NO.	REVISION-LOCATION		ECN	DATE	BY

Sales Engineer: Waters	Project Manager: Reed	Application Engineer: Radlovic	DRAWN: BY R.R. DATE 7/28/2004	APPROVED: BY K.S. DATE 7/28/2004

REVISION INFORMATION — NUMBER: number — DATE: 07/28/04 — TIME: 11:11 AM — extra — FILE NAME: AH-1-3.vsd

Drawing Title: **Singlezone VAV AHU Bldg 282 - Typ of 2 Wiring Diagrams**

Project Title: **Nellis AFB ESPC Energy Savings Performance Contract Las Vegas, Nevada**

JOHNSON CONTROLS — Systems & Services Division

Branch Information: Johnson Controls, Inc. 3579 Redrock St. Suite B Las Vegas, NV 89103 Phone: (702) 798-1979 Fax: (702) 798-7621

CONTRACT NUMBER: **3307-0028**

DRAWING NUMBER: **AH-1-3**

US Army Corps of Engineers Sacramento District

Symbol	Description	Date	Approved

Rev: — Date: — Design file no: 229-25-539 — Drawing Code: 1004 — File name: N29M-804XXX.dwg — Plot date: 07/14/2003 — Dwg scale: AS NOTED

Designed by: A.M. — Dwn by: J.F. — Spec No.: 1304 — Reviewed by: S.B. — Submitted by: A.J. WISSEN — Code: Tech/Doc Sec. Sec.

DEPARTMENT OF THE ARMY CORPS OF ENGINEERS SACRAMENTO, CALIFORNIA

SACRAMENTO DISTRICT IN-HOUSE DESIGN 1325 "J" STREET SACRAMENTO, CA 95814-2922

NEVADA — NELLIS AFB — F/A-22 ADD/ALTER WEAPONS SCHOOL

EXISTING JOHNSON CONTROLS IN BLDG 282

Sheet reference number: M-804

Border: Revised 01/07/03, CORSHOD.DWG

BOILER & CHILLER CONTROL

BLDG 282 - TYPICAL OF 2

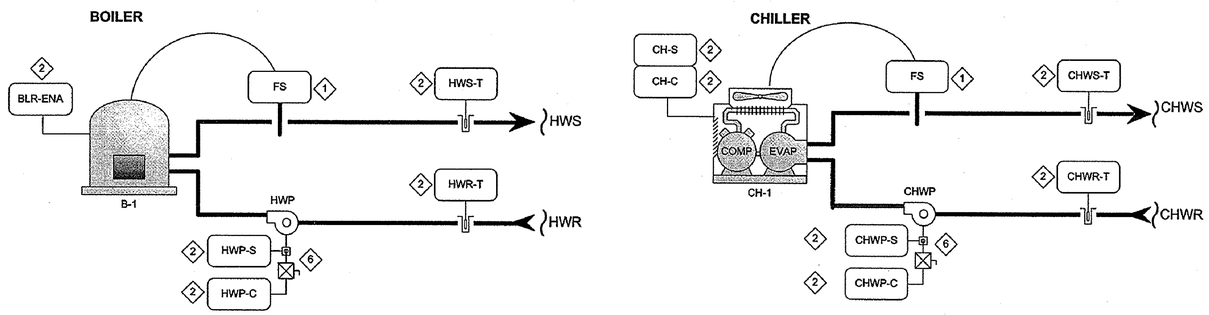

BILL OF MATERIAL

Designation	Qty	Part Number	Description
Field Devices:			
BLR-ENA, HWP-C	4	RIBU1C	10AMP SPDT 10-30VAC/DC/120VAC
CH-C, CHWP-C	4	RIBU1C	10AMP SPDT 10-30VAC/DC/120VAC
CHWP-S	2	H908	SW,CURRENT,3-135A,ADJ,SPLIT
CHWS-T, CHWR-T	4	TE-6000-1	SENSOR,T-NI,1.0%,STRAP-ON
HWP-S	2	H908	SW,CURRENT,3-135A,ADJ,SPLIT
HWS-T, HWR-T	4	TE-6000-1	SENSOR,T-NI,1.0%,STRAP-ON
Panel Devices:			
DX9100 Controller	2	PADPE	PANEL ASSY, DX MOUNTED IN 24X24 ENCL

DX9100 CONTROL PANEL

LOCATED IN MECHANICAL ROOM

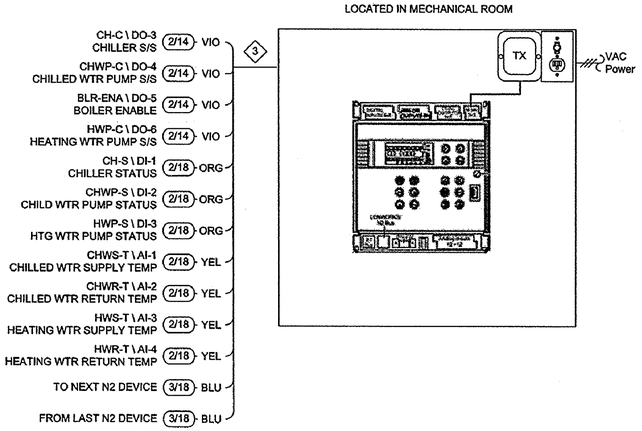

SEQUENCE OF OPERATIONS

AIR COOLED CHILLER:

Whenever the OSA temperature is greater than 60 °F, the cooling water system shall be enabled. OSA temperature is provided with AHU unit controls and it is transferred over the N2 network to all controllers that needed it. First the cooling water pump shall be energized (CHWP-C), and after one minute the chiller shall be enabled (CH-C). The flow switch is hardwired in the chiller circuit and if flow cannot be proven the chiller is unable to start, on a contrary if flow is proven, the chiller starts. The chiller is then commanded on and off to maintain the supply temperature setpoint, manually set on the chiller thermostat. For shutdown the chiller shall be turned off and after a 5-minute delay the cooling water pump shall be turned off.

BAS is monitoring the supply (CHWS-T) and the return (CHWR-T) water temperatures, as well as the chilled water pump status (CHWP-S) and the chiller status (CH-S).

When the outside air is below 33 °F the chilled water pump shall be enabled (CHWP-C) and the chiller shall remain off (CH-C).

BOILER:

Whenever the OSA temperature is less than 60 °F, the hot water system shall be enabled. OSA temperature is provided with AHU unit controls and it is transferred over the N2 network to all controllers that needed it. First the heating water pump shall be energized (HWP-C), and after one minute the boiler shall be enabled (BLR-ENA). The flow switch is hardwired in the boiler circuit and if flow cannot be proven the boiler is unable to start, on a contrary if flow is proven, the boiler starts. The boiler is then commanded on and off to maintain the supply temperature setpoint. For shutdown the boiler shall be turned off and after a 5-minute delay the heating water pump shall be turned off.

BAS is monitoring the supply (HWS-T) and the return (HWR-T) water temperatures, as well as the heating water pump status (HWP-S).

When the outside air is below 33 °F the heating water pump shall be enabled (HWP-C).

KEYED NOTES:

1. Flow Switch provided and installed by others.
2. New device wired into the new controller, in accordance with the point list . Old devices disconnected and abandoned in place.
3. All control cables to follow Metasys standard wire colors.
4. Not used.
5. Not used.
6. Existing starter, HOA switch, overloads, disconnect switch, all high voltage wiring, and fuses.

REVISION INFORMATION	Drawing Title						
NUMBER number	**Boiler & Chiller Control Bldg 282 - Typical of 2 Flow Diagram**		1	As-Built		7/28/2004	A.B.
DATE 07/28/04		REFERENCE DRAWING	NO.	REVISION-LOCATION	ECN	DATE	BY
TIME 11:11 AM	Project Title	Sales Engineer: Waters; Project Manager: Reed; Application Engineer: Radlovic; DRAWN BY R.R. DATE 7/28/2004; APPROVED BY K.S. DATE 7/28/2004					
extra	**Nellis AFB ESPC Energy Savings Performance Contract Las Vegas, Nevada**	JOHNSON CONTROLS Systems & Services Division	Branch Information: Johnson Controls, Inc. 3579 Redrock St. Suite B Las Vegas, NV 89103 Phone: (702) 798-1979 Fax: (702) 798-7621	CONTRACT NUMBER **3307-0028**			
FILE NAME CP-1-1.vsd				DRAWING NUMBER **CP-1-1**			

US Army Corps of Engineers
Sacramento District

Symbol	Description	Date	Approved

Designed by: A.M.
Dwn by: J.F.
Spec No.: 1304
Reviewed by: S.B.
Date:
Rev:
Design file no: 229-25-539
Drawing Code: 100%
File name: N39M-805XXX.dwg
Plot date: 07/14/2005
Dwg scale: AS NOTED
Submitted by: A.M. Tiffany
Chief, Mech/Elec Des. Sec.

DEPARTMENT OF THE ARMY
CORPS OF ENGINEERS
SACRAMENTO, CALIFORNIA

SACRAMENTO DISTRICT
IN-HOUSE DESIGN
1325 "J" STREET
SACRAMENTO, CA 95814-2922

NEVADA
NELLIS AFB
F/A-22 ADD/ALTER WEAPONS SCHOOL

EXISTING JOHNSON CONTROLS IN BLDG 282

Sheet reference number: M-805

Border Revised 01/07/02, D2CSPM2.DWG

		Point Information			Controller Information									Panel Information					Intermediate Device					Field Device						
Tag	Point Type	System Name	Object Name	Expanded ID	Controller Type	Controller Details	Trunk Type	Trunk Nbr	Trunk Addr.	Cable Destination Bay/Terminal	DO Type	Module Type	Termination Out	Panel	Panel Location	Slot Number	Reference Drawing	Cable Number	Wiring /Tubing	Termination In	Device	Termination Out	Location	Wiring /Tubing	Termination In	Device	Location	Ref Detail Stencil Name	Ref Detail Shape	Comment
		CP			DX9100	DX9100								CP	Mech Room		CP-1-1													Power to Controller
		CP			DX9100	DX9100	N2	1	80,90					CP	Mech Room	0	CP-1-1													N2 Trunk
	DO-3	CP	CH-C	Chiller S/S	DX9100	DX9100	N2	1	80,90	DO-3			DO3,COM	CP	Mech Room	0	CP-1-1	CH-C	2/18 VIO	COIL (Wh/Yel,Wh/Blue)	RIB Relay	COM, NO (Yel, Org)		2/14	See wiring detail	Starter (NO) (Sw Hi)		DX-RD.VSS	D502	
	DO-4	CP	CHWP-C	Chilled Wtr Pump S/S	DX9100	DX9100	N2	1	80,90	DO-4			DO4,COM	CP	Mech Room	0	CP-1-1	CHWP-C	2/18 VIO	COIL (Wh/Yel,Wh/Blue)	RIB Relay	COM, NO (Yel, Org)		2/14	See wiring detail	Starter (NO) (Sw Hi)		DX-RD.VSS	D502	
	DO-5	CP	BLR-ENA	Boiler Enable	DX9100	DX9100	N2	1	80,90	DO-5			DO5,COM	CP	Mech Room	0	CP-1-1	BLR-ENA	2/18 VIO	COIL (Wh/Yel,Wh/Blue)	RIB Relay	COM, NO (Yel, Org)		2/14	See wiring detail	Starter (NO) (Sw Hi)		DX-RD.VSS	D502	
	DO-6	CP	HWP-C	Heating Wtr Pump S/S	DX9100	DX9100	N2	1	80,90	DO-6			DO6,COM	CP	Mech Room	0	CP-1-1	HWP-C	2/18 VIO	COIL (Wh/Yel,Wh/Blue)	RIB Relay	COM, NO (Yel, Org)		2/14	See wiring detail	Starter (NO) (Sw Hi)		DX-RD.VSS	D502	
	DO-7	CP			DX9100	DX9100	N2	1	80,90	DO-7				CP	Mech Room	0	CP-1-1													
	DO-8	CP			DX9100	DX9100	N2	1	80,90	DO-8				CP	Mech Room	0	CP-1-1													
	DI-1	CP	CH-S	Chiller Status	DX9100	DX9100	N2	1	80,90	DI-1			DI1,DICom	CP	Mech Room	0	CP-1-1	CH-S						2/18	See wiring detail	Dry Contact		DX-RD.VSS	D301	
	DI-2	CP	CHWP-S	Chld Wtr Pump Status	DX9100	DX9100	N2	1	80,90	DI-2			DI2,DICom	CP	Mech Room	0	CP-1-1	CHWP-S	2/18 ORG	OUT, COM	Veris Current Relay	Motor Lead		2/18	See wiring detail	Motor Status		DX-RD.VSS	D301	
	DI-3	CP	HWP-S	Htg Wtr Pump Status	DX9100	DX9100	N2	1	80,90	DI-3			DI3,DICom	CP	Mech Room	0	CP-1-1	HWP-S	2/18 ORG	OUT, COM	Veris Current Relay	Motor Lead		2/18	See wiring detail	Motor Status		DX-RD.VSS	D301	
	DI-4	CP			DX9100	DX9100	N2	1	80,90	DI-4				CP	Mech Room	0	CP-1-1													
	DI-5	CP			DX9100	DX9100	N2	1	80,90	DI-5				CP	Mech Room	0	CP-1-1													
	DI-6	CP			DX9100	DX9100	N2	1	80,90	DI-6				CP	Mech Room	0	CP-1-1													
	DI-7	CP			DX9100	DX9100	N2	1	80,90	DI-7				CP	Mech Room	0	CP-1-1													
	DI-8	CP			DX9100	DX9100	N2	1	80,90	DI-8				CP	Mech Room	0	CP-1-1													
	AI-1	CP	CHWS-T	Chilled Wtr Supply Temp	DX9100	DX9100	N2	1	80,90	AI-1			AI1,AICom	CP	Mech Room	0	CP-1-1	CHWS-T						2/18	2-Wire	TE		DX-RD.VSS	D131	
	AI-2	CP	CHWR-T	Chilled Wtr Return Temp	DX9100	DX9100	N2	1	80,90	AI-2			AI2,AICom	CP	Mech Room	0	CP-1-1	CHWR-T						2/18	2-Wire	TE		DX-RD.VSS	D131	
	AI-3	CP	HWS-T	Heating Wtr Supply Temp	DX9100	DX9100	N2	1	80,90	AI-3			AI3,AICom	CP	Mech Room	0	CP-1-1	HWS-T						2/18	2-Wire	TE		DX-RD.VSS	D131	
	AI-4	CP	HWR-T	Heating Wtr Return Temp	DX9100	DX9100	N2	1	80,90	AI-4			AI4,AICom	CP	Mech Room	0	CP-1-1	HWR-T						2/18	2-Wire	TE		DX-RD.VSS	D131	
	AI-5	CP			DX9100	DX9100	N2	1	80,90	AI-5				CP	Mech Room	0	CP-1-1													
	AI-6	CP			DX9100	DX9100	N2	1	80,90	AI-6				CP	Mech Room	0	CP-1-1													
	AI-7	CP			DX9100	DX9100	N2	1	80,90	AI-7				CP	Mech Room	0	CP-1-1													
	AI-8	CP			DX9100	DX9100	N2	1	80,90	AI-8				CP	Mech Room	0	CP-1-1													
	AO-1	CP			DX9100	DX9100	N2	1	80,90	AO-1				CP	Mech Room	0	CP-1-1													
	AO-2	CP			DX9100	DX9100	N2	1	80,90	AO-2				CP	Mech Room	0	CP-1-1													
	AO-9	CP			DX9100	DX9100	N2	1	80,90	AO-9				CP	Mech Room	0	CP-1-1													
	AO-10	CP			DX9100	DX9100	N2	1	80,90	AO-10				CP	Mech Room	0	CP-1-1													
	AO-11	CP			DX9100	DX9100	N2	1	80,90	AO-11				CP	Mech Room	0	CP-1-1													
	AO-12	CP			DX9100	DX9100	N2	1	80,90	AO-12				CP	Mech Room	0	CP-1-1													
	AO-13	CP			DX9100	DX9100	N2	1	80,90	AO-13				CP	Mech Room	0	CP-1-1													
	AO-14	CP			DX9100	DX9100	N2	1	1	AO-14				CP	Mech Room	0	CP-1-1													

DETAIL D131 TEMPERATURE SENSOR INPUT

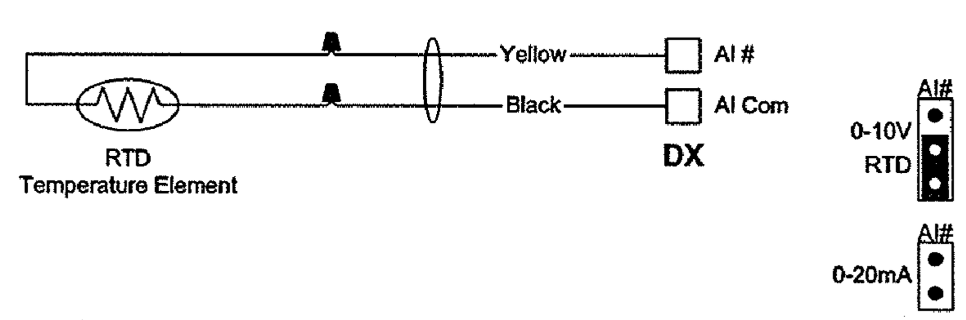

DETAIL D301 BINARY INPUT (DRY CONTACT)

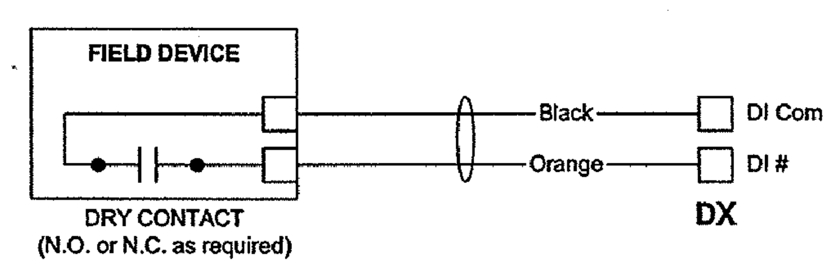

DETAIL D502 24 VAC BINARY OUTPUT to LOW CURRENT DRAW DEVICE (Switch High)

(Use when current draw of the Field Device is less than 50 mA)

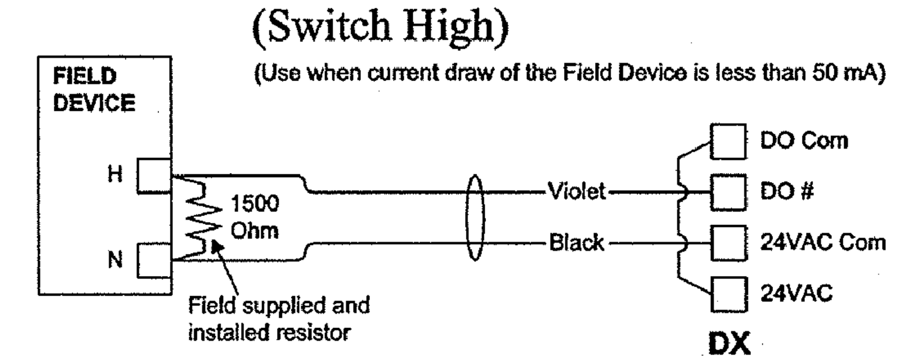

DETAIL N2:

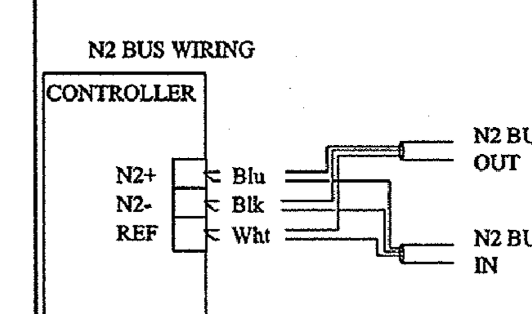

DETAIL SHIELD:

METASYS STANDARD CABLE SHIELD GROUNDING

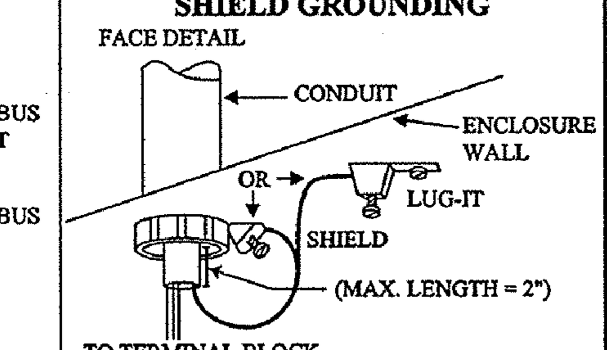

GROUND SHIELD AT CONTROLLER END ONLY

DETAIL WIRE:

METASYS STANDARD WIRE COLOR CODING CONVENTION

Type	Cable Color	Conductor Number	Conductor Color	Use	Notes
AI	Yellow	1	Yellow (Yel)	Analog Input	
		2	Black (Blk)	Com or +VDC	
		3	White (Wht)	+VDC	If Used
AO	Tan	1	Tan	Analog Output	
		2	Black (Blk)	Com or +VDC	
		3	White (Wht)	+VDC	If Used
BI / DI	Orange	1	Orange (Org)	Binary Input	
		2	Black (Blk)	Common	
BO / DO	Violet	1	Violet (Vlt)	Binary Output	
		2	Black (Blk)	Com or +VDC	
N2 Bus	Blue	1	Blue (Blu)	N2 +	
		2	Black (Blk)	N2 -	
		3	White (Wht)	N2 Ref	
N1 Bus (RG62)	Purple	1	N/A	N1	Bare Copper Center
		2	N/A	N1	Braid Copper Shield
24 VAC	Gray	1	Gray (Gry)	+24 VAC	
		2	Black (Blk)	24 VAC Com	
General Purpose	Natural	1	White (Wht)	I/O or General	
		2	Black (Blk)	Com or General	
		3	Red	General	If Used

NOTE: THIS TABLE OUTLINES THE GENERAL IDEA OF THE METASYS STANDARD WIRE COLORS. SOME APPLICATIONS MAY NOT FIT THE METASYS STANDARD COLOR CODING CONVENTION. MODIFY WHEN APPROPRIATE.

L-DX-TERMINAL

DX-9100 TERMINAL BOARD AND LOGIC BOARD JUMPER SETTINGS

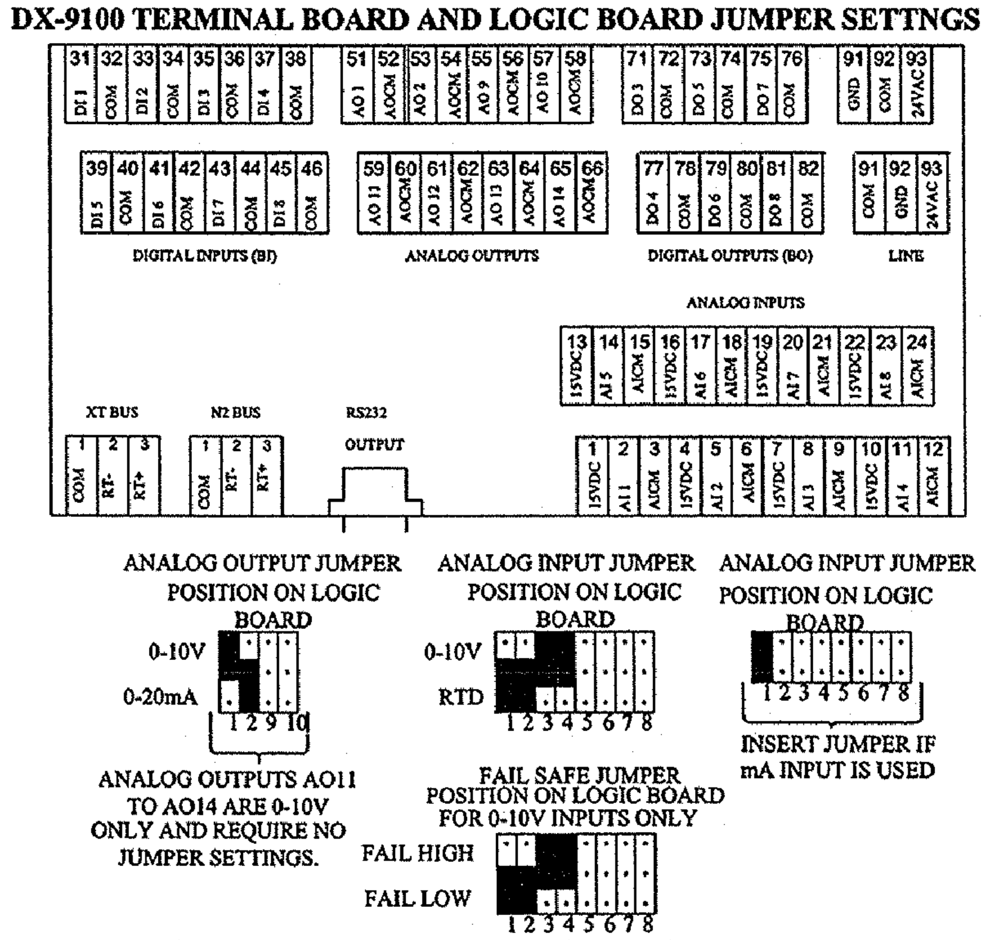

SELECT THE ANALOG INPUT TYPE USING ONE JUMPER PER INPUT IN THE "0-10V/RTD" JUMPER FIELD OR "CURRENT" JUMPER FIELD.

DETAIL CABLE:

METASYS STANDARD CABLE COLORS

TYPE	CABLE COLOR
AI	Yellow (Yel)
AO	Tan
DI/BI	Orange (Org)
DO/BO	Violet (Vlt)
N2 Bus	Blue (Blu)
N1 Bus	Purple (Pur)
24VAC	Gray (Gry)
General Purpose	Natural (Nat)

BOILER & CHILLER CONTROL

BLDG 282 - TYPICAL OF 2

	1	As-Built		7/28/2004	A.B.	
REFERENCE DRAWING	NO.	REVISION-LOCATION	ECN	DATE	BY	

REVISION INFORMATION — NUMBER: number — DATE: 07/28/04 — TIME: 11:11 AM — extra — FILE NAME: CP-1-2.vsd

Drawing Title: Boiler & Chiller Control Bldg 282 - Typical of 2 Point Schedule

Sales Engineer: Waters — Project Manager: Reed — Application Engineer: Radlovic — DRAWN BY R.R. DATE 7/28/2004 — APPROVED BY K.S. DATE 7/28/2004

Project Title: Nellis AFB ESPC Energy Savings Performance Contract Las Vegas, Nevada

JOHNSON CONTROLS
Systems & Services Division

Branch Information: Johnson Controls, Inc. 3579 Redrock St. Suite B Las Vegas, NV 89103 Phone: (702) 798-1979 Fax: (702) 798-7621

CONTRACT NUMBER: 3307-0028

DRAWING NUMBER: CP-1-2

US Army Corps of Engineers Sacramento District

DEPARTMENT OF THE ARMY CORPS OF ENGINEERS SACRAMENTO, CALIFORNIA

SACRAMENTO DISTRICT IN-HOUSE DESIGN 1325 "J" STREET SACRAMENTO, CA 95814-2922

NELLIS AFB NEVADA

F/A-22 ADD/ALTER WEAPONS SCHOOL

EXISTING JOHNSON CONTROLS IN BLDG 282

Sheet reference number: M-806

AHU-1 VAV COOLING ONLY

TYPICAL OF 33

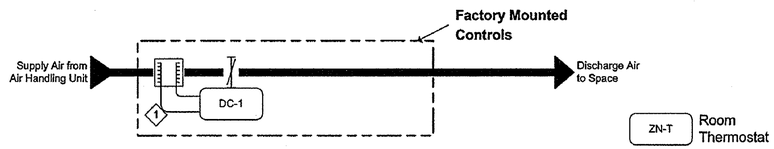

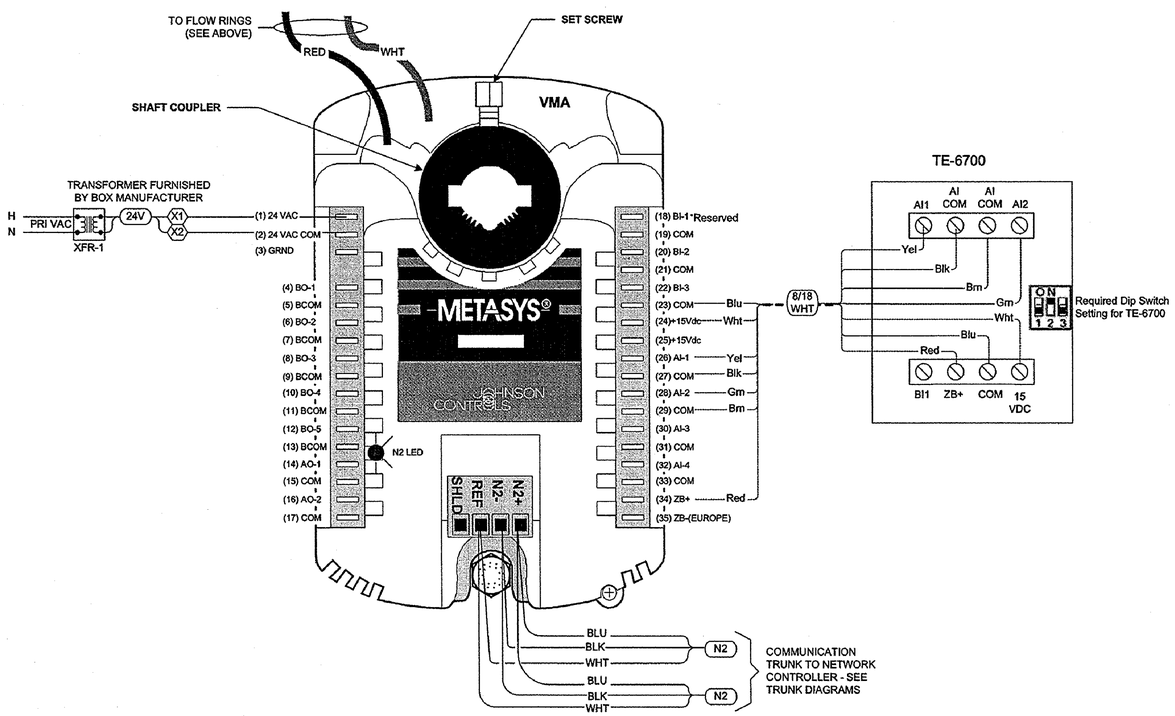

BILL OF MATERIAL

Designation	Qty	Part Number	Description
Field Devices:			
VMA	1	AP-VMA1420-0A01	K-12 VMA K-12 STD APP #1
ZN-T	1	TE-67NT-1B00	SENSOR,RM,1K NI,TERM BLK,W/C,THERM

SEQUENCE OF OPERATION

Modes of Operation: Modes of operation are determined by a time schedule programmed into the Building Management System (BMS). If the BMS N2 communication is interrupted, the unit will revert to 'Occupied' mode.

Occupied Mode: A space sensor will transmit room temperature to the box controller, which will vary the primary airflow to maintain space temperature. A rise in space temperature above setpoint will modulate primary airflow to maximum CFM setpoint into the space. A drop in space temperature below setpoint will modulate the primary airflow to minimum CFM setpoint.

Unoccupied System Mode: When the system is indexed to unoccupied mode, the air handling unit will stop and the box damper will close. If the space temperature falls below the night setback point, the VAV box will open to allow the air handling unit to heat the space to unoccupied heating setpoint. If the space temperature rises above the night cycle setpoint, the air handling unit will start and the box controller will vary the primary airflow to cool the space to unoccupied cooling setpoint.

A pushbutton override on the space thermostat will allow occupants to index the system to occupied mode for after-hours use. The box controller will function per occupied mode of operation until the temporary occupancy timer expires, at which time the box controller will index to unoccupied mode, subject to time of day scheduling.

Notes:

See Room Schedule for box locations, thermostat locations, controller addresses, and MAX and MIN CFM values.

KEYED NOTES:

1. Low spot for collecting condensation.

REVISION INFORMATION	Drawing Title						
NUMBER number	AHU-1 VAV Cooling Only Typical of 33 Flow Diagram						
DATE 07/28/04			1	As-Built		7/28/2004	A.B.
TIME 11:11 AM		REFERENCE DRAWING	NO.	REVISION-LOCATION	ECN	DATE	BY
extra	Project Title	Sales Engineer: Waters	Project Manager: Reed	Application Engineer: Radlovic	DRAWN BY R.R. DATE 7/28/2004	APPROVED BY DATE	
FILE NAME VA-1-1.vsd	Nellis AFB ESPC Energy Savings Performance Contract Las Vegas, Nevada	JOHNSON CONTROLS Systems & Services Division	Branch Information: Johnson Controls, Inc. 3579 Redrock St. Suite B Las Vegas, NV 89103 Phone: (702) 798-1979 Fax: (702) 798-7621		CONTRACT NUMBER 3307-0028	DRAWING NUMBER VA-1-1	

US Army Corps of Engineers Sacramento District

Symbol	Description	Date	Approved

Designed by: A.M. | Dwn by: J.F. | Spec No.: 1304 | Reviewed by: S.B. | Submitted for: Y.V. NESS | Chief, Mech/Elec. Des. Sec.

Date: | Rev: | Design file no: 229-25-539 | Drawing Code: 1005 | File name: N39M-807XXX.dwg | Plot date: 07/14/2005 | Dwg scale: AS NOTED

DEPARTMENT OF THE ARMY CORPS OF ENGINEERS SACRAMENTO, CALIFORNIA

SACRAMENTO DISTRICT IN-HOUSE DESIGN 1325 "J" STREET SACRAMENTO, CA 95814-2922

NELLIS AFB | NEVADA

F/A-22 ADD/ALTER WEAPONS SCHOOL

EXISTING JOHNSON CONTROLS IN BLDG 282

Sheet reference number: M-807

Border Revised: 01/07/02, CCESIGN02.DWG

	Point Information				Controller Information										Panel Information					Intermediate Device					Field Device						
Tag	Point Type	System Name	Object Name	Expanded ID	Controller Type	Controller Details	Trunk Type	Trunk Nbr	Trunk Addr.	Cable Destination Bay/Terminal	DO Type	Module Type	Termination Out	Panel	Panel Location	Slot Number	Reference Drawing	Cable Number	Wiring /Tubing	Termination In	Device	Termination Out	Location	Wiring /Tubing	Termination In	Device	Location	Ref Detail Stencil Name	Ref Detail Shape	Comment
		AHU-1 VAV			VMA	VMA 1420								VAV-nn	Field		VA-1-1													
		AHU-1 VAV			VMA	VMA 1420	N2	1	x					VAV-nn	Field	0	VA-1-1													Power to Controller
	AI-1	AHU-1 VAV	ZN-T	Zone Temp	VMA	VMA 1420	N2	1	x	AI-1			AI1,COM	VAV-nn	Field	0	VA-1-1	ZN-T						2/18 YEL	1, 2	TE-6700-1E (TB, Lad OFF)		VMA-RD,VSS	VMA138	N2 Trunk
	AI-2	AHU-1 VAV	W/C-ADJ	Warm/Cool Adjust	VMA	VMA 1420	N2	1	x	AI-2			See VA-1-1	VAV-nn	Field	0	VA-1-1									see previous				
	AI-3	AHU-1 VAV			VMA	VMA 1420	N2	1	x	AI-3				VAV-nn	Field	0	VA-1-1													
	AI-4	AHU-1 VAV			VMA	VMA 1420	N2	1	x	AI-4				VAV-nn	Field	0	VA-1-1													
	AI-5	AHU-1 VAV	SA-VP	Supply Delta P	VMA	VMA 1420	N2	1	x	AI-5				VAV-nn	Field	0	VA-1-1									Internal to VMA				Internaly wired
	BI-1	AHU-1 VAV	TOCC-S	Temporary Occ Status	VMA	VMA 1420	N2	1	x	BI-1				VAV-nn	Field	0	VA-1-1									Internal to VMA				Internaly wired
	BI-2	AHU-1 VAV			VMA	VMA 1420	N2	1	x	BI-2				VAV-nn	Field	0	VA-1-1													
	BI-3	AHU-1 VAV			VMA	VMA 1420	N2	1	x	BI-3				VAV-nn	Field	0	VA-1-1													
	BO-1	AHU-1 VAV			VMA	VMA 1420	N2	1	x	BO-1				VAV-nn	Field	0	VA-1-1													
	BO-2	AHU-1 VAV			VMA	VMA 1420	N2	1	x	BO-2				VAV-nn	Field	0	VA-1-1													
	BO-3	AHU-1 VAV			VMA	VMA 1420	N2	1	x	BO-3				VAV-nn	Field	0	VA-1-1													
	BO-4	AHU-1 VAV			VMA	VMA 1420	N2	1	x	BO-4				VAV-nn	Field	0	VA-1-1													
	BO-5	AHU-1 VAV			VMA	VMA 1420	N2	1	x	BO-5				VAV-nn	Field	0	VA-1-1													
	AO-1	AHU-1 VAV			VMA	VMA 1420	N2	1	x	AO-1				VAV-nn	Field	0	VA-1-1													
	AO-2	AHU-1 VAV			VMA	VMA 1420	N2	1	x	AO-2				VAV-nn	Field	0	VA-1-1													

DETAIL WIRE:

METASYS STANDARD WIRE COLOR CODING CONVENTION

Type	Cable Color	Conductor Number	Conductor Color	Use	Notes
AI	Yellow	1	Yellow (Yel)	Analog Input	
		2	Black (Blk)	Com or +VDC	
		3	White (Wht)	+VDC	If Used
AO	Tan	1	Tan	Analog Output	
		2	Black (Blk)	Com or +VDC	
		3	White (Wht)	+VDC	If Used
BI / DI	Orange	1	Orange (Org)	Binary Input	
		2	Black (Blk)	Common	
BO / DO	Violet	1	Violet (Vlt)	Binary Output	
		2	Black (Blk)	Com or +VDC	
N2 Bus	Blue	1	Blue (Blu)	N2 +	
		2	Black (Blk)	N2 -	
		3	White (Wht)	N2 Ref	
N1 Bus (RG62)	Purple	1	N/A	N1	Bare Copper Center
		2	N/A	N1	Braid Copper Shield
24 VAC	Gray	1	Gray (Gry)	+24 VAC	
		2	Black (Blk)	24 VAC Com	
General Purpose	Natural	1	White (Wht)	I/O or General	
		2	Black (Blk)	Com or General	
		3	Red	General	If Used

NOTE: THIS TABLE OUTLINES THE GENERAL IDEA OF THE METASYS STANDARD WIRE COLORS. SOME APPLICATIONS MAY NOT FIT THE METASYS STANDARD COLOR CODING CONVENTION. MODIFY WHEN APPROPRIATE.

DETAIL SHIELD:

METASYS STANDARD CABLE SHIELD GROUNDING

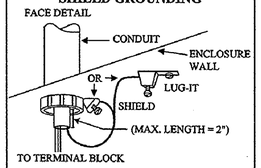

GROUND SHIELD AT CONTROLLER END ONLY

REVISION INFORMATION	Drawing Title						
NUMBER number	AHU-1 VAV Cooling Only Typical of 33 Point Schedule						
DATE 07/28/04			1	As-Built		7/28/2004	A.B.
		REFERENCE DRAWING	NO.	REVISION-LOCATION	ECN	DATE	BY
		Sales Engineer Waters / Project Manager Reed / Application Engineer Radlovic		DRAWN BY R.R. DATE 7/28/2004	APPROVED BY	DATE	
TIME 11:12 AM	Project Title						
extra	Nellis AFB ESPC Energy Savings Performance Contract Las Vegas, Nevada	JOHNSON CONTROLS Systems & Services Division		Branch Information: Johnson Controls, Inc. 3579 Redrock St. Suite B Las Vegas, NV 89103 Phone: (702) 798-1979 Fax: (702) 798-7621	CONTRACT NUMBER 3307-0028		
FILE NAME VA-1-2.vsd					DRAWING NUMBER VA-1-2		

US Army Corps of Engineers Sacramento District

Symbol	Description	Date	Approved

Designed by: A.M. | Dwn by: J.F. | Spec No.: 1304 | Date: | Rev:
Reviewed by: S.B. | Drawing Code: 100% | Design file no: 229-25-539
Submitted by: J.V. NIESEN | Chief, Mech/Elec Des. Sec. | File name: N39M-808XXX.dwg | Plot date: 07/14/2003 | Dwg scale: AS NOTED

DEPARTMENT OF THE ARMY
CORPS OF ENGINEERS
SACRAMENTO, CALIFORNIA

SACRAMENTO DISTRICT
IN-HOUSE DESIGN
1325 "J" STREET
SACRAMENTO, CA 95814-2922

NELLIS AFB — NEVADA

F/A-22 ADD/ALTER WEAPONS SCHOOL

EXISTING JOHNSON CONTROLS IN BLDG 282

Sheet reference number: M-808

Border Revised: 01/07/02, CQESR/02.DWG

AHU-1 VAV WITH REHEAT

TYPICAL OF 16

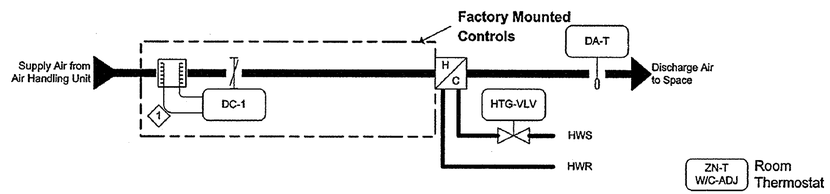

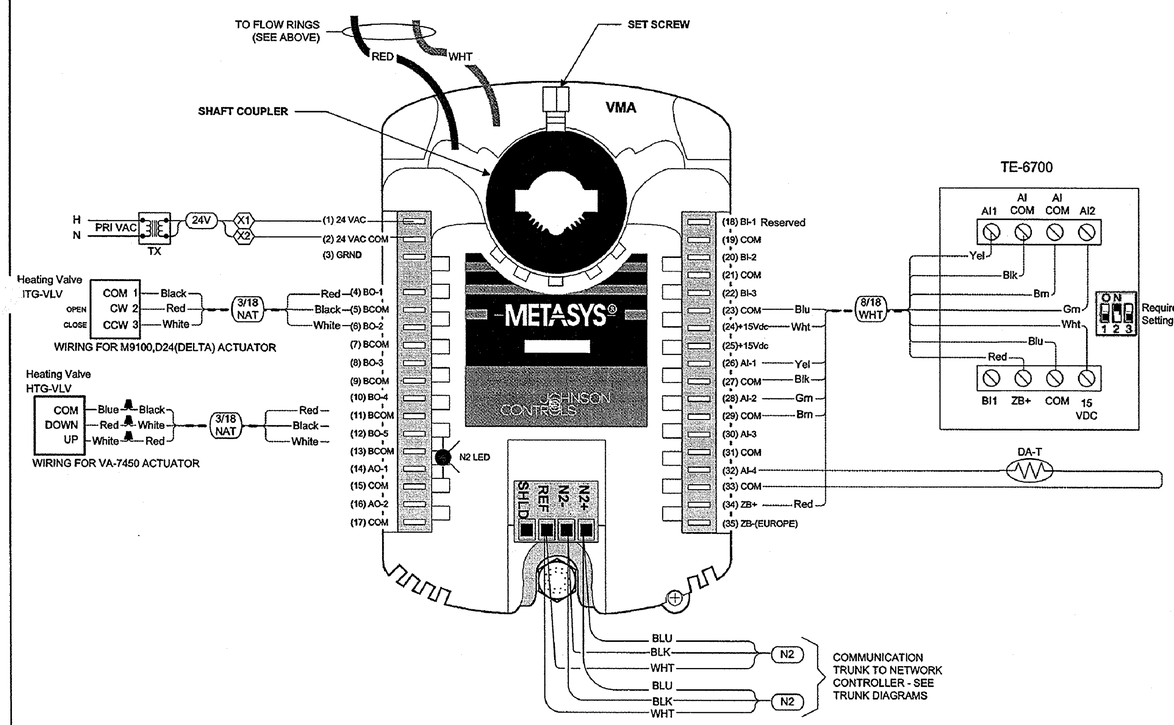

BILL OF MATERIAL

Designation	Qty	Part Number	Description
Field Devices:			
DA-T	16	TE-6311P-1	SENSOR,T-NI,0.1%,8IN DUCT
TX	16	Y65A13-0	XFMR,120/24,40VA,FOOT [Y65AS]
VMA Controller	16	AP-VMA1420-0	VAV MODULAR ASSY - CLG W/ REHEAT
ZN-T	16	TE-67NT-1B00	SENSOR,RM,1K NI,TERM BLK,W/C,THERM

SEQUENCE OF OPERATION

Modes of Operation: Modes of operation are determined by a time schedule programmed into the Building Management System (BMS). If the BMS N2 communication is interrupted, the unit will revert to 'Occupied' mode.

Occupied Mode: A space sensor will transmit room temperature to the box controller, which will vary the primary airflow to maintain space temperature. A rise in space temperature above setpoint will modulate primary airflow to maximum CFM setpoint into the space. A drop in space temperature below setpoint will modulate the primary airflow to minimum CFM setpoint. A further drop in space temperature will modulate the box reheat valve.

Unoccupied System Mode: When the system is indexed to unoccupied mode, the air handling unit will stop, the box damper will close and the box reheat valve will close. If the space temperature falls below the night setback point, the VAV box damper will open, and the heating valve will open to allow the air handling unit to heat the space to unoccupied heating setpoint. If the space temperature rises above the night cycle setpoint, the air handling unit will start and the box controller will vary the primary airflow to cool the space to unoccupied cooling setpoint.

A pushbutton override on the space thermostat will allow occupants to index the system to occupied mode for after-hours use. The box controller will function per occupied mode of operation until the temporary occupancy timer expires, at which time the box controller will index to unoccupied mode, subject to time of day scheduling.

Notes:

See Room Schedule for box locations, thermostat locations, controller addresses, and MAX and MIN CFM values.

KEYED NOTES:

1. Low spot for collecting condensation.

REVISION INFORMATION	Drawing Title	NO.	REVISION-LOCATION	ECN	DATE	BY
NUMBER: number	AHU-1 VAV With Reheat Typical of 16 Flow Diagram	1	As-Built		7/28/2004	A.B.
DATE: 07/28/04		REFERENCE DRAWING				
TIME: 11:12 AM		Sales Engineer: Waters	Project Manager: Reed	Application Engineer: Radlovic	DRAWN BY R.R. DATE 7/28/2004	APPROVED BY DATE
extra	Project Title: Nellis AFB ESPC Energy Savings Performance Contract Las Vegas, Nevada	JOHNSON CONTROLS Systems & Services Division	Branch Information: Johnson Controls, Inc. 3579 Redrock St. Suite B Las Vegas, NV 89103 Phone: (702) 798-1979 Fax: (702) 798-7621	CONTRACT NUMBER: 3307-0028		
FILE NAME: VA-1-3.vsd				DRAWING NUMBER: VA-1-3		

US Army Corps of Engineers
Sacramento District

Symbol	Description	Date	Approved

Designed by: A.M.
Dwn by: J.F.
Spec. No.: 1304
Reviewed by: S.B.
Date:
Rev:
Design file no: 229-25-539
Drawing Code: 100%
File name: N29M-809XXX.dwg
Plot date: 07/14/2003
Dwg scale: AS NOTED
Submitted by: W.J. NESS
Chief, Mech/Elec. Des. Sec.

DEPARTMENT OF THE ARMY
CORPS OF ENGINEERS
SACRAMENTO, CALIFORNIA

SACRAMENTO DISTRICT
IN-HOUSE DESIGN
1325 "J" STREET
SACRAMENTO, CA 95814-2922

NEVADA
NELLIA AFB
F/A-22 ADD/ALTER WEAPONS SCHOOL

EXISTING JOHNSON CONTROLS IN BLDG 282

Sheet reference number:
M-809

Border Revised: 01/07/02, CDESIGN02.DWG

	Point Information				Controller Information										Panel Information					Intermediate Device					Field Device						
Tag	Point Type	System Name	Object Name	Expanded ID	Controller Type	Controller Details	Trunk Type	Trunk Nbr	Trunk Addr.	Cable Destination Bay/Terminal	DO Type	Module Type	Termination Out	Panel	Panel Location	Slot Number	Reference Drawing	Cable Number	Wiring /Tubing	Termination In	Device	Termination Out	Location	Wiring /Tubing	Termination In	Device	Location	Ref Detail Stencil Name	Ref Detail Shape	Comment
		AHU-1 VAV			VMA	VMA 1420								VAV-nn	Field		VA-1-3													
		AHU-1 VAV			VMA	VMA 1420	N2	1	x					VAV-nn	Field	0	VA-1-3													Power to Controller
	AI-1	AHU-1 VAV	ZN-T	Zone Temp	VMA	VMA 1420	N2	1	x	AI-1			AI1,COM	VAV-nn	Field	0	VA-1-3	ZN-T												N2 Trunk
	AI-2	AHU-1 VAV	W/C-ADJ	Warm/Cool Adjust	VMA	VMA 1420	N2	1	x	AI-2			AI2,COM	VAV-nn	Field	0	VA-1-3	W/C-ADJ						2/18 YEL	1, 2	TE-6700-TE (TB, Led OFF)		VMA-RD,VSS	VMA138	
	AI-3	AHU-1 VAV			VMA	VMA 1420	N2	1	x	AI-3				VAV-nn	Field	0	VA-1-3							2/18 YEL	4, 3	TE-6700-SET (TB, Led OFF)		VMA-RD,VSS	VMA138	
	AI-4	AHU-1 VAV	DA-T	Disch Air Temp	VMA	VMA 1420	N2	1	x	AI-4			AI4,COM	VAV-nn	Field	0	VA-1-3	DA-T						2/18	2-Wire	TE		VMA-RD,VSS	VMA131	
	AI-5	AHU-1 VAV	SA-VP	Supply Delta P	VMA	VMA 1420	N2	1	x	AI-5				VAV-nn	Field	0	VA-1-3									Internal to VMA				Internaly wired
	BI-1	AHU-1 VAV	TOCC-S	Temporary Occ Status	VMA	VMA 1420	N2	1	x	BI-1				VAV-nn	Field	0	VA-1-3									Internal to VMA				Internaly wired
	BI-2	AHU-1 VAV			VMA	VMA 1420	N2	1	x	BI-2				VAV-nn	Field	0	VA-1-3													
	BI-3	AHU-1 VAV			VMA	VMA 1420	N2	1	x	BI-3				VAV-nn	Field	0	VA-1-3													
	BO-1	AHU-1 VAV	BXHTG-OP	Box Heat Open	VMA	VMA 1420	N2	1	x	BO-1			BO-1,BO-2,BCOM	VAV-nn	Field	0	VA-1-3	BXHTG-OP						3/18	3, 2, 1	NM24 (Incr)		VMA-RD,VSS	VMA431	
	BO-2	AHU-1 VAV	BXHTG-CL	Box Heat Close	VMA	VMA 1420	N2	1	x	BO-2			see previous	VAV-nn	Field	0	VA-1-3	BXHTG-CL								see previous				
	BO-3	AHU-1 VAV			VMA	VMA 1420	N2	1	x	BO-3				VAV-nn	Field	0	VA-1-3													
	BO-4	AHU-1 VAV			VMA	VMA 1420	N2	1	x	BO-4				VAV-nn	Field	0	VA-1-3													
	BO-5	AHU-1 VAV			VMA	VMA 1420	N2	1	x	BO-5				VAV-nn	Field	0	VA-1-3													
	AO-1	AHU-1 VAV			VMA	VMA 1420	N2	1	x	AO-1				VAV-nn	Field	0	VA-1-3													
	AO-2	AHU-1 VAV			VMA	VMA 1420	N2	1	x	AO-2				VAV-nn	Field	0	VA-1-3													

DETAIL WIRE:

METASYS STANDARD WIRE COLOR CODING CONVENTION

Type	Cable Color	Conductor Number	Conductor Color	Use	Notes
AI	Yellow	1	Yellow (Yel)	Analog Input	
		2	Black (Blk)	Com or +VDC	
		3	White (Wht)	+VDC	If Used
AO	Tan	1	Tan	Analog Output	
		2	Black (Blk)	Com or +VDC	
		3	White (Wht)	+VDC	If Used
BI / DI	Orange	1	Orange (Org)	Binary Input	
		2	Black (Blk)	Common	
BO / DO	Violet	1	Violet (Vlt)	Binary Output	
		2	Black (Blk)	Com or +VDC	
N2 Bus	Blue	1	Blue (Blu)	N2 +	
		2	Black (Blk)	N2 -	
		3	White (Wht)	N2 Ref	
N1 Bus (RG62)	Purple	1	N/A	N1	Bare Copper Center
		2	N/A	N1	Braid Copper Shield
24 VAC	Gray	1	Gray (Gry)	+24 VAC	
		2	Black (Blk)	24 VAC Com	
General Purpose	Natural	1	White (Wht)	I/O or General	
		2	Black (Blk)	Com or General	
		3	Red	General	If Used

NOTE: THIS TABLE OUTLINES THE GENERAL IDEA OF THE METASYS STANDARD WIRE COLORS. SOME APPLICATIONS MAY NOT FIT THE METASYS STANDARD COLOR CODING CONVENTION. MODIFY WHEN APPROPRIATE.

DETAIL SHIELD:

METASYS STANDARD CABLE SHIELD GROUNDING

FACE DETAIL

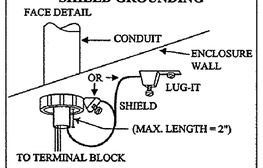

TO TERMINAL BLOCK

GROUND SHIELD AT CONTROLLER END ONLY

			1	As-Built		7/28/2004	A.B.
			NO.	REVISION-LOCATION	ECN	DATE	BY

REVISION INFORMATION — NUMBER: number — DATE: 07/28/04 — TIME: 11:12 AM — extra — FILE NAME: VA-1-4.vsd

Drawing Title: **AHU-1 VAV With Reheat Typical of 16 Point Schedule**

Project Title: **Nellis AFB ESPC Energy Savings Performance Contract Las Vegas, Nevada**

Sales Engineer	Project Manager	Application Engineer	DRAWN	APPROVED
Waters	Reed	Radlovic	BY R.R. DATE 7/28/2004	BY DATE

JOHNSON CONTROLS — Systems & Services Division

Branch Information: Johnson Controls, Inc. 3579 Redrock St. Suite B Las Vegas, NV 89103 Phone: (702) 798-1979 Fax: (702) 798-7621

CONTRACT NUMBER: **3307-0028**

DRAWING NUMBER: **VA-1-4**

US Army Corps of Engineers Sacramento District

Approved | Date | Description | Symbol

Designed by: A.M. | Date: | Rev:
Dwn by: J.F. | Spec No.: 1304 | Design file no: 229-25-539
Reviewed by: S.B. | Drawing Code: 1004
Submitted by: W.V. NIESEN | File name: N29M-810000.dwg
Chief, Mech/Elec. Sec. Sec. | Plot date: 07/14/2010
Dwg scale: AS NOTED

DEPARTMENT OF THE ARMY CORPS OF ENGINEERS SACRAMENTO, CALIFORNIA

SACRAMENTO DISTRICT IN-HOUSE DESIGN 1325 "J" STREET SACRAMENTO, CA 95814-2922

NEVADA — NELLIS AFB — F/A-22 ADD/ALTER WEAPONS SCHOOL

EXISTING JOHNSON CONTROLS IN BLDG 282

Sheet reference number: M-810

Border Revised: 01/07/02, CEDSI/02.DWG

AHU-2 VAV WITH REHEAT

TYPICAL OF 22

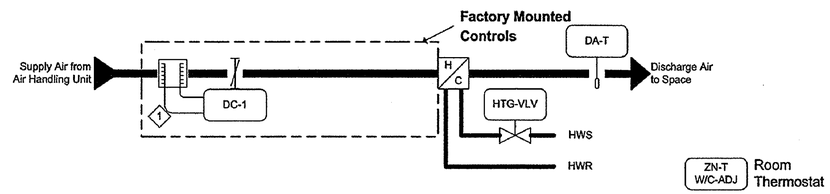

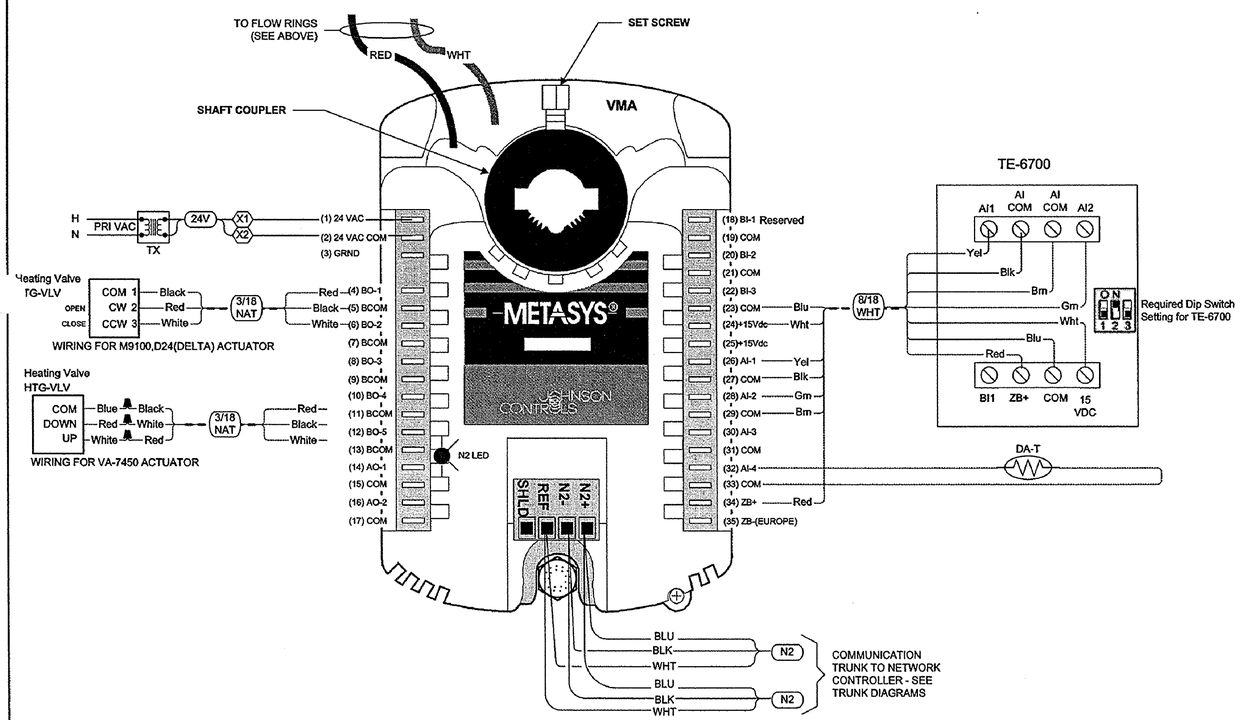

Notes:

See Room Schedule for box locations, thermostat locations, controller addresses, and MAX and MIN CFM values.

KEYED NOTES:

1. Low spot for collecting condensation.

BILL OF MATERIAL

Designation	Qty	Part Number	Description
Field Devices:			
DA-T	22	TE-6311P-1	SENSOR,T-NI,0.1%,8IN DUCT
TX	22	Y65A13-0	XFMR,120/24,40VA,FOOT [Y65AS]
VMA Controller	22	AP-VMA1420-0	VAV MODULAR ASSY - CLG W/ REHEAT
ZN-T	22	TE-67NT-1B00	SENSOR,RM,1K NI,TERM BLK,W/C,THERM

SEQUENCE OF OPERATION

Modes of Operation: Modes of operation are determined by a time schedule programmed into the Building Management System (BMS). If the BMS N2 communication is interrupted, the unit will revert to 'Occupied' mode.

Occupied Mode: A space sensor will transmit room temperature to the box controller, which will vary the primary airflow to maintain space temperature. A rise in space temperature above setpoint will modulate primary airflow to maximum CFM setpoint into the space. A drop in space temperature below setpoint will modulate the primary airflow to minimum CFM setpoint. A further drop in space temperature will modulate the box reheat valve.

Unoccupied System Mode: When the system is indexed to unoccupied mode, the air handling unit will stop, the box damper will close and the box reheat valve will close. If the space temperature falls below the night setback point, the VAV box damper will open, and the heating valve will open to allow the air handling unit to heat the space to unoccupied heating setpoint. If the space temperature rises above the night cycle setpoint, the air handling unit will start and the box controller will vary the primary airflow to cool the space to unoccupied cooling setpoint.

A pushbutton override on the space thermostat will allow occupants to index the system to occupied mode for after-hours use. The box controller will function per occupied mode of operation until the temporary occupancy timer expires, at which time the box controller will index to unoccupied mode, subject to time of day scheduling.

Morning Warm-Up Mode: When the system is indexed to the morning warm-up, the system will set the space sensor to its occupied heating temperature. The box controller will index the primary airflow to 100%, the heating valve will open and allow primary air to heat the space when the respective air handling unit is cycled to morning warm-up. The damper and heating valve will close when the space is satisfied and the airhandling unit is still in warm-up mode. When the air handling unit returns to occupied operation, the box will index to occupied mode of operation.

REVISION INFORMATION	Drawing Title						
NUMBER number	**AHU-2 VAV With Reheat Typical of 22 Flow Diagram**						
DATE 07/28/04		1	As-Built		7/28/2004	A.B.
		REFERENCE DRAWING	NO.	REVISION-LOCATION	ECN	DATE	BY
TIME 11:12 AM	Project Title	Sales Engineer: Waters	Project Manager: Reed	Application Engineer: Radlovic	DRAWN BY R.R. DATE 7/28/2004	APPROVED BY DATE	
extra	**Nellis AFB ESPC Energy Savings Performance Contract Las Vegas, Nevada**	JOHNSON CONTROLS Systems & Services Division		Branch Information: Johnson Controls, Inc. 3579 Redrock St. Suite B Las Vegas, NV 89103 Phone: (702) 798-1979 Fax: (702) 798-7621	CONTRACT NUMBER **3307-0028**		
FILE NAME VA-2-1.vsd					DRAWING NUMBER **VA-2-1**		

US Army Corps of Engineers
Sacramento District

Symbol	Description	Date	Approved

Rev.
Date:
Designed by: A.M.
Dwn by: J.F.
Spec No.: 1304
Design file no: 229-25-539
Drawing Code: 100%
Reviewed by: S.B.
Submitted by: M. WILKINSON
File name: N39M-811XXX.dwg
Plot date: 02/04/2010
Dwg scale: AS NOTED

DEPARTMENT OF THE ARMY
CORPS OF ENGINEERS
SACRAMENTO, CALIFORNIA

SACRAMENTO DISTRICT
IN-HOUSE DESIGN
1325 "J" STREET
SACRAMENTO, CA 95814-2922

NEVADA
NELLIS AFB
F/A-22 ADD/ALTER WEAPONS SCHOOL
EXISTING JOHNSON CONTROLS IN BLDG 282

Sheet reference number:
M-811

	Point Information				Controller Information										Panel Information					Intermediate Device					Field Device						
Tag	Point Type	System Name	Object Name	Expanded ID	Controller Type	Controller Details	Trunk Type	Trunk Nbr	Trunk Addr.	Cable Destination Bay/Terminal	DO Type	Module Type	Termination Out	Panel	Panel Location	Slot Number	Reference Drawing	Cable Number	Wiring /Tubing	Termination In	Device	Termination Out	Location	Wiring /Tubing	Termination In	Device	Location	Ref Detail Stencil Name	Ref Detail Shape	Comment
		AHU-2 VAV			VMA	VMA 1420								VAV-nn	Field		VA-2-1													Power to Controller
		AHU-2 VAV			VMA	VMA 1420	N2	1	x					VAV-nn	Field	0	VA-2-1													N2 Trunk
	AI-1	AHU-2 VAV	ZN-T	Zone Temp	VMA	VMA 1420	N2	1	x	AI-1			AI1,COM	VAV-nn	Field	0	VA-2-1	ZN-T						2/18 YEL	1, 2	TE-6700-TE (TB, Led OFF)		VMA-RD.VSS	VMA138	
	AI-2	AHU-2 VAV	W/C-ADJ	Warm-Cool Adjust	VMA	VMA 1420	N2	1	x	AI-2			AI2,COM	VAV-nn	Field	0	VA-2-1	W/C-ADJ						2/18 YEL	4, 3	TE-6700-SET (TB, Led OFF)		VMA-RD.VSS	VMA138	
	AI-3	AHU-2 VAV			VMA	VMA 1420	N2	1	x	AI-3				VAV-nn	Field	0	VA-2-1														
	AI-4	AHU-2 VAV	DA-T	Disch Air Temp	VMA	VMA 1420	N2	1	x	AI-4			AI4,COM	VAV-nn	Field	0	VA-2-1	DA-T						2/18	2-Wire	TE		VMA-RD.VSS	VMA131	
	AI-5	AHU-2 VAV	SA-VP	Supply Delta P	VMA	VMA 1420	N2	1	x	AI-5				VAV-nn	Field	0	VA-2-1									Internal to VMA				Internaly wired
	BI-1	AHU-2 VAV	TOCC-S	Temporary Occ Status	VMA	VMA 1420	N2	1	x	BI-1				VAV-nn	Field	0	VA-2-1									Internal to VMA				Internaly wired
	BI-2	AHU-2 VAV			VMA	VMA 1420	N2	1	x	BI-2				VAV-nn	Field	0	VA-2-1													
	BI-3	AHU-2 VAV			VMA	VMA 1420	N2	1	x	BI-3				VAV-nn	Field	0	VA-2-1													
	BO-1	AHU-2 VAV	BXHTG-OP	Box Heat Open	VMA	VMA 1420	N2	1	x	BO-1			BO-1,BO-2,BCOM	VAV-nn	Field	0	VA-2-1	BXHTG-OP						3/18	3, 2, 1	NM24 (Incr)		VMA-RD.VSS	VMA431	
	BO-2	AHU-2 VAV	BXHTG-CL	Box Heat Close	VMA	VMA 1420	N2	1	x	BO-2			see previous	VAV-nn	Field	0	VA-2-1	BXHTG-CL								see previous				
	BO-3	AHU-2 VAV			VMA	VMA 1420	N2	1	x	BO-3				VAV-nn	Field	0	VA-2-1													
	BO-4	AHU-2 VAV			VMA	VMA 1420	N2	1	x	BO-4				VAV-nn	Field	0	VA-2-1													
	BO-5	AHU-2 VAV			VMA	VMA 1420	N2	1	x	BO-5				VAV-nn	Field	0	VA-2-1													
	AO-1	AHU-2 VAV			VMA	VMA 1420	N2	1	x	AO-1				VAV-nn	Field	0	VA-2-1													
	AO-2	AHU-2 VAV			VMA	VMA 1420	N2	1	x	AO-2				VAV-nn	Field	0	VA-2-1													

DETAIL WIRE:

METASYS STANDARD WIRE COLOR CODING CONVENTION

Type	Cable Color	Conductor Number	Conductor Color	Use	Notes
AI	Yellow	1	Yellow (Yel)	Analog Input	
		2	Black (Blk)	Com or +VDC	
		3	White (Wht)	+VDC	If Used
AO	Tan	1	Tan	Analog Output	
		2	Black (Blk)	Com or +VDC	
		3	White (Wht)	+VDC	If Used
BI / DI	Orange	1	Orange (Org)	Binary Input	
		2	Black (Blk)	Common	
BO / DO	Violet	1	Violet (Vlt)	Binary Output	
		2	Black (Blk)	Com or +VDC	
N2 Bus	Blue	1	Blue (Blu)	N2 +	
		2	Black (Blk)	N2 -	
		3	White (Wht)	N2 Ref	
N1 Bus (RG62)	Purple	1	N/A	N1	Bare Copper Center
		2	N/A	N1	Braid Copper Shield
24 VAC	Gray	1	Gray (Gry)	+24 VAC	
		2	Black (Blk)	24 VAC Com	
General Purpose	Natural	1	White (Wht)	I/O or General	
		2	Black (Blk)	Com or General	
		3	Red	General	If Used

NOTE: THIS TABLE OUTLINES THE GENERAL IDEA OF THE METASYS STANDARD WIRE COLORS. SOME APPLICATIONS MAY NOT FIT THE METASYS STANDARD COLOR CODING CONVENTION. MODIFY WHEN APPROPRIATE.

DETAIL SHIELD:

METASYS STANDARD CABLE SHIELD GROUNDING

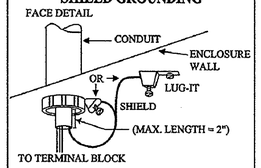

GROUND SHIELD AT CONTROLLER END ONLY

			1	As-Built		7/28/2004	A.B.
		REFERENCE DRAWING	NO.	REVISION-LOCATION	ECN	DATE	BY

REVISION INFORMATION — NUMBER: number — DATE: 07/28/04 — TIME: 11:12 AM — extra — FILE NAME: VA-2-2.vsd

Drawing Title: **AHU-1 VAV With Reheat Typical of 22 Point Schedule**

Project Title: **Nellis AFB ESPC Energy Savings Performance Contract Las Vegas, Nevada**

Sales Engineer	Project Manager	Application Engineer	DRAWN	APPROVED
Waters	Reed	Radiovic	BY R.R. DATE 7/28/2004	BY DATE

JOHNSON CONTROLS — Systems & Services Division

Branch Information: Johnson Controls, Inc. 3579 Redrock St. Suite B Las Vegas, NV 89103 Phone: (702) 798-1979 Fax: (702) 798-7621

CONTRACT NUMBER: **3307-0028**

DRAWING NUMBER: **VA-2-2**

US Army Corps of Engineers Sacramento District

Approved | Date | Description | Symbol

Designed by: A.M. | Date: | Rev:
Dwn by: J.F. | Spec No.: 1304 | Design file no: 229-25-539
Reviewed by: S.B. | Drawing Code: 1004
Submitted by: W.H. NESS | File name: N29M-812XXX.dwg
Chief, Mech/Elec Des. Sec. | Plot date: 02/04/2002
Dwg scale: AS NOTED

DEPARTMENT OF THE ARMY CORPS OF ENGINEERS SACRAMENTO, CALIFORNIA

SACRAMENTO DISTRICT IN-HOUSE DESIGN 1325 "J" STREET SACRAMENTO, CA 95814-2922

NELLIS AFB — NEVADA

F/A-22 ADD/ALTER WEAPONS SCHOOL

EXISTING JOHNSON CONTROLS IN BLDG 282

Sheet reference number: M-812

Border Revised: 01/07/02, CCESIS702.DWG

BLDG 282 HEAT PUMP

TYPICAL OF 5

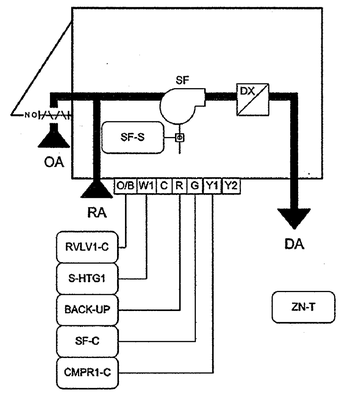

BILL OF MATERIAL

Designation	Qty	Part Number	Description
Field Devices:			
BACK-UP	5	RIBU1C	10AMP SPDT 10-30VAC/DC/120VAC
SF-S	5	H738	SENS,CURR,1A @30VAC/DC,1/3HP,CMND RELAY
ZN-T	5	TE-67NT-1B00	SENSOR,RM,1K NI,TERM BLK,W/C,THERM
Panel Devices:			
UNT CONTROLLER	5	AS-UNT141-1	CNTRLR,DIG,UNT,6AI,4BI,6BO,2AO,SCR

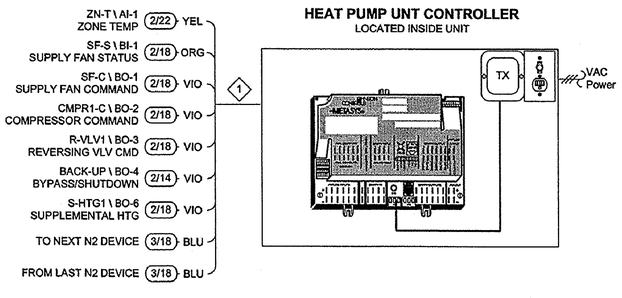

KEYED NOTES:

1. All control cables to follow Metasys standard wire colors.

SEQUENCE OF OPERATION:

OCCUPIED/UNOCCUPIED MODE:
The unit shall be toggled between the occupied and unoccupied modes by a weekly schedule or by an operator manual command.

OCCUPIED MODE:
On a rise in zone temperature, the Heat Pump unit shall cycle the compressors to maintain occupied cooling zone temperature set point. On a decrease in zone temperature, the Heat Pump unit shall de-energize the reversing valve and cycle the compressors to maintain the occupied zone temperature set point.

UNOCCUPIED MODE:
On a rise in zone temperature, the Heat Pump unit shall cycle the compressors to maintain unoccupied cooling zone temperature set point. On a decrease in zone temperature, the Heat Pump unit shall de-energize the reversing valve and cycle the compressors to maintain the occupied zone temperature set point.

BACK-UP (COOLING ONLY):
If the unit cannot maintain zone temperature set point + differential, the controller will index the dampers to man building system, bypass and shutdown the unit and signal an alarm.

REVISION INFORMATION	Drawing Title						
NUMBER number	Bldg 282 Heat Pump Typical of 5 Flow Diagram		1	As-Built		7/28/2004	A.B.
DATE 07/28/04		REFERENCE DRAWING	NO.	REVISION-LOCATION	ECN	DATE	BY
TIME 11:31 AM		Sales Engineer: Waters; Project Manager: Reed; Application Engineer: Radlovic		DRAWN: BY R.R. DATE 7/28/2004	APPROVED: BY K.S. DATE 7/28/2004		
extra	Project Title: Nellis AFB ESPC Energy Savings Performance Contract Las Vegas, Nevada	JOHNSON CONTROLS Systems & Services Division		Branch Information: Johnson Controls, Inc. 3579 Redrock St. Suite B Las Vegas, NV 89103 Phone: (702) 798-1979 Fax: (702) 798-7621	CONTRACT NUMBER 3307-0028		
FILE NAME HTP-1-1.vsd					DRAWING NUMBER HTP-1-1		

US Army Corps of Engineers
Sacramento District

Symbol	Description	Date	Approved

Designed by: A.M.
Dwn by: J.F.
Spec No.: 1304
Reviewed by: S.B.
Submitted by: A.M. / NISSN
Date:
Rev:
Design file no: 229-25-539
Drawing Code: 100%
File name: N39M-813XXX.dwg
Plot date: 07/14/2003
Dwg scale: AS NOTED

DEPARTMENT OF THE ARMY
CORPS OF ENGINEERS
SACRAMENTO, CALIFORNIA

SACRAMENTO DISTRICT
IN-HOUSE DESIGN
1325 "J" STREET
SACRAMENTO, CA 95814-2922

NELLIS AFB NEVADA

F/A-22 ADD/ALTER WEAPONS SCHOOL

EXISTING JOHNSON CONTROLS IN BLDG 282

Sheet reference number: M-813

	Point Information				Controller Information									Panel Information					Intermediate Device					Field Device						
Tag	Point Type	System Name	Object Name	Expanded ID	Controller Type	Controller Details	Trunk Type	Trunk Nbr	Trunk Addr.	Cable Destination Bay/Terminal	DO Type	Module Type	Termination Out	Panel	Panel Location	Slot Number	Reference Drawing	Cable Number	Wiring /Tubing	Termination In	Device	Termination Out	Location	Wiring /Tubing	Termination In	Device	Location	Ref Detail Stencil Name	Ref Detail Shape	Comment
		HTP-x			UNT14x	UNT 141								HTP-x	Inside Unit		HTP-1-1													Power to Controller
		HTP-x			UNT14x	UNT 141	N2	1	x					HTP-x	Inside Unit	0	HTP-1-1													N2 Trunk
	AI-1	HTP-x	ZN-T	Zone Temp	UNT14x	UNT 141	N2	1	x	AI-1			AI1,A COM	HTP-x	Inside Unit	0	HTP-1-1	ZN-T						2/22	1, 2	TE-6700-TE (TB, Led OFF)		UNT14x-RD,VS	UT138	
	AI-2	HTP-x			UNT14x	UNT 141	N2	1	x	AI-2				HTP-x	Inside Unit	0	HTP-1-1													
	AI-3	HTP-x			UNT14x	UNT 141	N2	1	x	AI-3				HTP-x	Inside Unit	0	HTP-1-1													
	AI-4	HTP-x			UNT14x	UNT 141	N2	1	x	AI-4				HTP-x	Inside Unit	0	HTP-1-1													
	AI-5	HTP-x			UNT14x	UNT 141	N2	1	x	AI-5				HTP-x	Inside Unit	0	HTP-1-1													
	AI-6	HTP-x			UNT14x	UNT 141	N2	1	x	AI-6				HTP-x	Inside Unit	0	HTP-1-1													
	BI-1	HTP-x	SF-S	Supply Fan Status	UNT14x	UNT 141	N2	1	x	BI-1			BI1,24VAC	HTP-x	Inside Unit	0	HTP-1-1	SF-S	2/22	OUT, COM	Veris Current Relay	Motor Lead		Motor Lead	See wiring detail	Motor Status		UNT14x-RD,VS	UT301	
	BI-2	HTP-x			UNT14x	UNT 141	N2	1	x	BI-2				HTP-x	Inside Unit	0	HTP-1-1													
	BI-3	HTP-x			UNT14x	UNT 141	N2	1	x	BI-3				HTP-x	Inside Unit	0	HTP-1-1													
	BI-4	HTP-x			UNT14x	UNT 141	N2	1	x	BI-4				HTP-x	Inside Unit	0	HTP-1-1													
	BO-1	HTP-x	SF-C	Supply Fan Command	UNT14x	UNT 141	N2	1	x	BO-1			BO1,RTN	HTP-x	Inside Unit	0	HTP-1-1	SF-C						2/18	See wiring detail	24VAC OUT (Sw Hi)		UNT14x-RD,VS	UT501	
	BO-2	HTP-x	CMPR1-C	Compressor Command	UNT14x	UNT 141	N2	1	x	BO-2			BO2,RTN	HTP-x	Inside Unit	0	HTP-1-1	CMPR1-C						2/18	See wiring detail	24VAC OUT (Sw Hi)		UNT14x-RD,VS	UT501	
	BO-3	HTP-x	R-VLV1	Reversing Vlv Cmd	UNT14x	UNT 141	N2	1	x	BO-3			BO3,RTN	HTP-x	Inside Unit	0	HTP-1-1	R-VLV1						2/18	See wiring detail	24VAC OUT (Sw Hi)		UNT14x-RD,VS	UT501	
	BO-4	HTP-x	BACK-UP	Bypass/Shutdown	UNT14x	UNT 141	N2	1	x	BO-4			BO4,RTN	HTP-x	Inside Unit	0	HTP-1-1	BACK-UP	2/22	COIL (Wh/Yel,Wh/Blue)	RIB Relay	COM, NO (Yel, Org)		2/14	See wiring detail	Control Panel (NO) (Sw Hi)		UNT14x-RD,VS	UT502	
	BO-5	HTP-x			UNT14x	UNT 141	N2	1	x	BO-5				HTP-x	Inside Unit	0	HTP-1-1													
	BO-6	HTP-x	S-HTG1	Supplemental Htg	UNT14x	UNT 141	N2	1	x	BO-6			BO6,RTN	HTP-x	Inside Unit	0	HTP-1-1	S-HTG1						2/18	See wiring detail	24VAC OUT (Sw Hi)		UNT14x-RD,VS	UT501	
	AO-1	HTP-x			UNT14x	UNT 141	N2	1	x	AO-1				HTP-x	Inside Unit	0	HTP-1-1													
	AO-2	HTP-x			UNT14x	UNT 141	N2	1	x	AO-2				HTP-x	Inside Unit	0	HTP-1-1													

DETAIL UT301 — BINARY INPUT (DRY CONTACT)

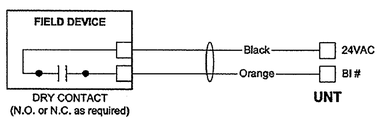

DETAIL UT501 — 24 VAC BINARY OUTPUT (Switch High)

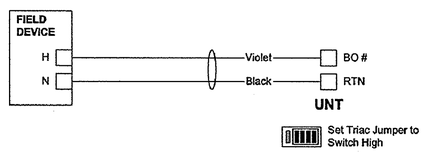

DETAIL UT502 — 24 VAC BINARY OUTPUT to LOW CURRENT DRAW DEVICE (Switch High)

(Use when current draw of the Field Device is less than 50 mA)

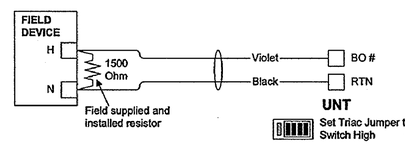

DETAIL UT138 — TE-6700 (Terminal Block) - LED OFF

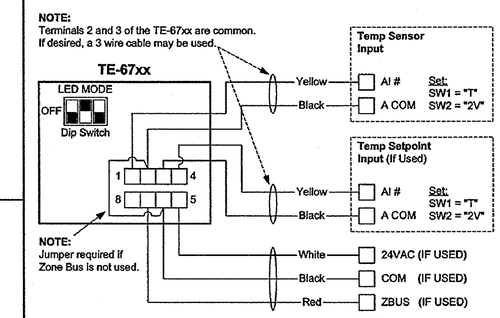

TERM	FUNCTION
1	SENSOR & OVERRIDE
2	SENSOR COMMON
3	SETPOINT COMMON
4	SETPOINT
5	POWER (24Vac or 15Vdc)
6	POWER/ZBUS COMMON
7	ZONE BUS
8	LED & OVERRIDE

DETAIL WIRE:

METASYS STANDARD WIRE COLOR CODING CONVENTION

Type	Cable Color	Conductor Number	Conductor Color	Use	Notes
AI	Yellow	1	Yellow (Yel)	Analog Input	
		2	Black (Blk)	Com or +VDC	
		3	White (Wht)	+VDC	If Used
AO	Tan	1	Tan	Analog Output	
		2	Black (Blk)	Com or +VDC	
		3	White (Wht)	+VDC	If Used
BI / DI	Orange	1	Orange (Org)	Binary Input	
		2	Black (Blk)	Common	
BO / DO	Violet	1	Violet (Vlt)	Binary Output	
		2	Black (Blk)	Com or +VDC	
N2 Bus	Blue	1	Blue (Blu)	N2 +	
		2	Black (Blk)	N2 -	
		3	White (Wht)	N2 Ref	
N1 Bus (RG62)	Purple	1	N/A	N1	Bare Copper Center
		2	N/A	N1	Braid Copper Shield
24 VAC	Gray	1	Gray (Gry)	+24 VAC	
		2	Black (Blk)	24 VAC Com	
General Purpose	Natural	1	White (Wht)	I/O or General	
		2	Black (Blk)	Com or General	
		3	Red	General	If Used

NOTE: THIS TABLE OUTLINES THE GENERAL IDEA OF THE METASYS STANDARD WIRE COLORS. SOME APPLICATIONS MAY NOT FIT THE METASYS STANDARD COLOR CODING CONVENTION. MODIFY WHEN APPROPRIATE.

DETAIL UNT CONTROLLER:

NOTE: 120 VAC POWER REQUIRES 3RD WIRE GROUNDING TO BUILDING GROUND. DO NOT USE CONDUIT AS GROUND.

NOTE: IF SHIELDED CABLE IS USED,GROUND AT CONTROLLER END ONLY.

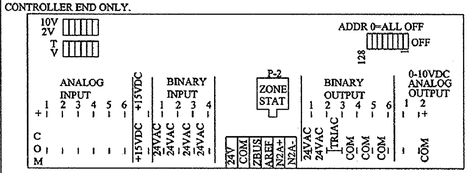

DETAIL N2:

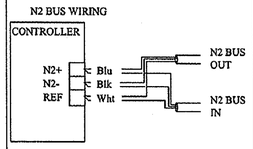

DETAIL SHIELD:

METASYS STANDARD CABLE SHIELD GROUNDING

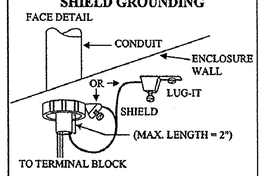

GROUND SHIELD AT CONTROLLER END ONLY

HEAT PUMP UNIT

BLDG 282 - TYP OF 5

REVISION INFORMATION	Drawing Title						
NUMBER number	Heat Pump Unit Bldg 282 - Typ of 5 Point Schedule						
DATE 07/28/04				1	As-Built	7/28/2004	A.B.
		REFERENCE DRAWING	NO.	REVISION-LOCATION		ECN	DATE / BY
		Sales Engineer: Waters / Project Manager: Reed	Application Engineer: Radlovic	DRAWN: BY R.R. DATE 7/28/2004	APPROVED: BY K.S. DATE 7/28/2004		
TIME 11:34 AM	Project Title						
extra	Nellis AFB ESPC Energy Savings Performance Contract Las Vegas, Nevada	JOHNSON CONTROLS Systems & Services Division		Branch Information Johnson Controls, Inc. 3579 Redrock St. Suite B Las Vegas, NV 89103 Phone: (702) 798-1979 Fax: (702) 798-7621		CONTRACT NUMBER 3307-0028	
FILE NAME HTP-1-2.vsd						DRAWING NUMBER HTP-1-2	

US Army Corps of Engineers
Sacramento District

Symbol	Description	Date	Approved

Designed by: A.M.
Dwn by: J.F.
Reviewed by: S.B.
Submitted by: A.M. / NES-EN
Date: Rev:
Spec No.: 1304
Design file no: 229-25-539
Drawing Code: 1004
File name: N39M-814XXX.dwg
Plot date: 07/28/2004
Dwg scale: AS NOTED

DEPARTMENT OF THE ARMY
CORPS OF ENGINEERS
SACRAMENTO, CALIFORNIA

SACRAMENTO DISTRICT
IN-HOUSE DESIGN
1325 "J" STREET
SACRAMENTO, CA 95814-2922

NEVADA
NELLIS AFB
F/A-22 ADD/ALTER WEAPONS SCHOOL

EXISTING JOHNSON CONTROLS IN BLDG 282

Sheet reference number:
M-814

Border Revised 01/07/02, D2630R02.DWG

Location								Room Controller/Sensor						Reheat Valve						Box Information										Actuator Information				
	Room							Controller					Sensor		Valve	Size	Valve	Flow	Delta P	Box Type														
Bldg./Flr.	No.	Name	AHU System Name	AHU Mechanical Tag	Visio Ref. Drawing	Mech. Ref. dwg.	Pt Sched N2 Addr	Code No.	NCM Addr	N2 Trunk	N2 Addr	CS Model	Code No.	Device Code	Body Style	In.	Cv	GPM lb/hr	psi	Box ID (System Name)	Box Mechanical Tag	Box Manufacturer	Box Type	K Factor	Inlet Size (Inches)	Inlet Size (Area)	Clg Min Flow	Clg Max Flow	VMA Box Config	Code No.	Range	Type		Comments
Building 282	101	Class	AHU -1	AHU -1	VA-1-1	M03	x	AP-VMA1410-0	282	1	23		TE-67NT-0N00	—	—	—	—	—	—	VAV-23	VAV-23	Titus	SD	1.87	8	0.35	150	460		Internal	0-1.5" WC	SM		
Building 282	102	Class	AHU -1	AHU -1	VA-1-1	M03	x	AP-VMA1410-0	282	1	24		TE-67NT-0N00	—	—	—	—	—	—	VAV-24	VAV-24	Titus	SD	1.87	8	0.35	150	460		Internal	0-1.5" WC	SM		
Building 282	103	Briefing	AHU -1	AHU -1	VA-1-1	M03	x	AP-VMA1410-0	282	1	25		TE-67NT-0N00	—	—	—	—	—	—	VAV-25	VAV-25	Titus	SD	1.31	4	0.09	70	140		Internal	0-1.5" WC	SM		
Building 282	104	Briefing	AHU -1	AHU -1	VA-1-1	M03	x	AP-VMA1410-0	282	1	26		TE-67NT-0N00	—	—	—	—	—	—	VAV-26	VAV-26	Titus	SD	1.31	4	0.09	70	140		Internal	0-1.5" WC	SM		
Building 282	106	Briefing	AHU -1	AHU -1	VA-1-1	M03	x	AP-VMA1410-0	282	1	27		TE-67NT-0N00	—	—	—	—	—	—	VAV-27	VAV-27	Titus	SD	1.31	4	0.09	70	140		Internal	0-1.5" WC	SM		
Building 282	105	Briefing	AHU -1	AHU -1	VA-1-1	M03	x	AP-VMA1410-0	282	1	28		TE-67NT-0N00	—	—	—	—	—	—	VAV-28	VAV-28	Titus	SD	1.31	4	0.09	70	140		Internal	0-1.5" WC	SM		
Building 282	109	Class	AHU -1	AHU -1	VA-1-1	M03	x	AP-VMA1410-0	282	1	29		TE-67NT-0N00	—	—	—	—	—	—	VAV-29	VAV-29	Titus	SD	1.87	8	0.35	150	450		Internal	0-1.5" WC	SM		
Building 282	110	Class	AHU -1	AHU -1	VA-1-1	M03	x	AP-VMA1410-0	282	1	30		TE-67NT-0N00	—	—	—	—	—	—	VAV-30	VAV-30	Titus	SD	1.87	8	0.35	150	450		Internal	0-1.5" WC	SM		
Building 282	111	Class	AHU -1	AHU -1	VA-1-1	M03	x	AP-VMA1410-0	282	1	31		TE-67NT-0N00	—	—	—	—	—	—	VAV-31	VAV-31	Titus	SD	1.87	8	0.35	150	450		Internal	0-1.5" WC	SM		
Building 282	112	Briefing	AHU -1	AHU -1	VA-1-1	M03	x	AP-VMA1410-0	282	1	32		TE-67NT-0N00	—	—	—	—	—	—	VAV-32	VAV-32	Titus	SD	1.31	4	0.09	70	140		Internal	0-1.5" WC	SM		
Building 282	113	LAN	AHU -1	AHU -1	VA-1-1	M03	x	AP-VMA1410-0	282	1	33		TE-67NT-0N00	—	—	—	—	—	—	VAV-33	VAV-33	Titus	SD	1.97	6	0.20	50	290		Internal	0-1.5" WC	SM		
Building 282	114	Class	AHU -1	AHU -1	VA-1-1	M03	x	AP-VMA1410-0	282	1	34		TE-67NT-0N00	—	—	—	—	—	—	VAV-34	VAV-34	Titus	SD	1.78	10	0.55	250	800		Internal	0-1.5" WC	SM		
Building 282	115	Office	AHU -1	AHU -1	VA-1-1	M03	x	AP-VMA1410-0	282	1	35		TE-67NT-0N00	—	—	—	—	—	—	VAV-35	VAV-35	Titus	SD	1.87	7	0.27	75	340		Internal	0-1.5" WC	SM		
Building 282	116	Office	AHU -1	AHU -1	VA-2-1	M03	x	AP-VMA1420-0	282	1	36		TE-67NT-0N00	Field Verify				0.26	2.2	VAV-36	VAV-36	Titus	SD	1.31	4	0.09	45	90		Internal	0-1.5" WC	SM		
Building 282	117	Office	AHU -1	AHU -1	VA-2-1	M03	x	AP-VMA1420-0	282	1	37		TE-67NT-0N00	Field Verify				0.26	2.2	VAV-37	VAV-37	Titus	SD	1.31	4	0.09	45	90		Internal	0-1.5" WC	SM		
Building 282	119	Office	AHU -1	AHU -1	VA-1-1	M03	x	AP-VMA1410-0	282	1	38		TE-67NT-0N00	—	—	—	—	—	—	VAV-38	VAV-38	Titus	SD	1.31	4	0.09	50	100		Internal	0-1.5" WC	SM		
Building 282	120	Office	AHU -1	AHU -1	VA-1-1	M03	x	AP-VMA1410-0	282	1	39		TE-67NT-0N00	—	—	—	—	—	—	VAV-39	VAV-39	Titus	SD	1.31	4	0.09	50	100		Internal	0-1.5" WC	SM		
Building 282	118	Office	AHU -1	AHU -1	VA-2-1	M03	x	AP-VMA1420-0	282	1	40		TE-67NT-0N00	Field Verify				0.53	2.2	VAV-40	VAV-40	Titus	SD	1.78	9	0.44	120	640		Internal	0-1.5" WC	SM		
Building 282	124	Office	AHU -1	AHU -1	VA-2-1	M03	x	AP-VMA1420-0	282	1	41		TE-67NT-0N00	Field Verify				0.33	2.2	VAV-41	VAV-41	Titus	SD	1.87	8	0.35	60	430		Internal	0-1.5" WC	SM		
Building 282	125	Office	AHU -1	AHU -1	VA-2-1	M03	x	AP-VMA1420-0	282	1	42		TE-67NT-0N00	Field Verify				0.36	2.2	VAV-42	VAV-42	Titus	SD	1.67	12	0.79	125	900		Internal	0-1.5" WC	SM		
Building 282	125	Office	AHU -1	AHU -1	VA-2-1	M03	x	AP-VMA1420-0	282	1	43		TE-67NT-0N00	Field Verify				0.53	2.2	VAV-43	VAV-43	Titus	SD	1.67	12	0.79	125	900		Internal	0-1.5" WC	SM		
Building 282	142	Office	AHU -1	AHU -1	VA-2-1	M03	x	AP-VMA1420-0	282	1	44		TE-67NT-0N00	Field Verify				0.48	2.2	VAV-44	VAV-44	Titus	SD	1.78	10	0.55	350	700		Internal	0-1.5" WC	SM		
Building 282	144/145	Office	AHU -1	AHU -1	VA-2-1	M03	x	AP-VMA1420-0	282	1	45		TE-67NT-0N00	Field Verify				0.73	2.2	VAV-45	VAV-45	Titus	SD	1.78	10	0.55	150	800		Internal	0-1.5" WC	SM		
Building 282	146	Office	AHU -1	AHU -1	VA-1-1	M03	x	AP-VMA1410-0	282	1	46		TE-67NT-0N00	—	—	—	—	—	—	VAV-46	VAV-46	Titus	SD	1.67	12	0.79	100	990		Internal	0-1.5" WC	SM		
Building 282	141	Office	AHU -1	AHU -1	VA-1-1	M03	x	AP-VMA1410-0	282	1	47		TE-67NT-0N00	—	—	—	—	—	—	VAV-47	VAV-47	Titus	SD	1.55	5	0.14	50	160		Internal	0-1.5" WC	SM		
Building 282	138	Office	AHU -1	AHU -1	VA-1-1	M03	x	AP-VMA1410-0	282	1	48		TE-67NT-0N00	—	—	—	—	—	—	VAV-48	VAV-48	Titus	SD	1.87	8	0.35	80	420		Internal	0-1.5" WC	SM		
Building 282	137	Office	AHU -1	AHU -1	VA-1-1	M03	x	AP-VMA1410-0	282	1	49		TE-67NT-0N00	—	—	—	—	—	—	VAV-49	VAV-49	Titus	SD	1.31	4	0.09	50	100		Internal	0-1.5" WC	SM		
Building 282	139	Office	AHU -1	AHU -1	VA-1-1	M03	x	AP-VMA1410-0	282	1	50		TE-67NT-0N00	—	—	—	—	—	—	VAV-50	VAV-50	Titus	SD	1.31	4	0.09	50	110		Internal	0-1.5" WC	SM		
Building 282	130	Office	AHU -1	AHU -1	VA-1-1	M03	x	AP-VMA1410-0	282	1	51		TE-67NT-0N00	—	—	—	—	—	—	VAV-51	VAV-51	Titus	SD	1.55	5	0.14	50	180		Internal	0-1.5" WC	SM		
Building 282	130	Office	AHU -1	AHU -1	VA-2-1	M03	x	AP-VMA1420-0	282	1	52		TE-67NT-0N00	Field Verify				0.48	2.2	VAV-52	VAV-52	Titus	SD	1.78	9	0.44	100	600		Internal	0-1.5" WC	SM		
Building 282	120	Office	AHU -1	AHU -1	VA-1-1	M03	x	AP-VMA1410-0	282	1	53		TE-67NT-0N00	—	—	—	—	—	—	VAV-53	VAV-53	Titus	SD	1.55	5	0.14	50	180		Internal	0-1.5" WC	SM		
Building 282	131	Office	AHU -1	AHU -1	VA-1-1	M03	x	AP-VMA1410-0	282	1	54		TE-67NT-0N00	—	—	—	—	—	—	VAV-54	VAV-54	Titus	SD	1.31	4	0.09	50	120		Internal	0-1.5" WC	SM		
Building 282	132	Office	AHU -1	AHU -1	VA-2-1	M03	x	AP-VMA1420-0	282	1	55		TE-67NT-0N00	Field Verify				0.52	2.2	VAV-55	VAV-55	Titus	SD	1.78	9	0.44	200	550		Internal	0-1.5" WC	SM		
Building 282	135	Office	AHU -1	AHU -1	VA-1-1	M03	x	AP-VMA1410-0	282	1	56		TE-67NT-0N00	—	—	—	—	—	—	VAV-56	VAV-56	Titus	SD	1.87	7	0.27	50	300		Internal	0-1.5" WC	SM		
Building 282	135	Office	AHU -1	AHU -1	VA-2-1	M03	x	AP-VMA1420-0	282	1	57		TE-67NT-0N00	Field Verify				0.52	2.2	VAV-57	VAV-57	Titus	SD	1.78	10	0.55	100	700		Internal	0-1.5" WC	SM		
Building 282	162	Office	AHU -1	AHU -1	VA-2-1	M03	x	AP-VMA1420-0	282	1	58		TE-67NT-0N00	Field Verify				0.25	2.2	VAV-58	VAV-58	Titus	SD	1.55	5	0.14	60	175		Internal	0-1.5" WC	SM		
Building 282	163	Office	AHU -1	AHU -1	VA-2-1	M03	x	AP-VMA1420-0	282	1	59		TE-67NT-0N00	Field Verify				0.25	2.2	VAV-59	VAV-59	Titus	SD	1.55	5	0.14	60	175		Internal	0-1.5" WC	SM		
Building 282	164	Office	AHU -1	AHU -1	VA-2-1	M03	x	AP-VMA1420-0	282	1	60		TE-67NT-0N00	Field Verify				0.25	2.2	VAV-60	VAV-60	Titus	SD	1.55	5	0.14	60	175		Internal	0-1.5" WC	SM		
Building 282	158	Office	AHU -1	AHU -1	VA-1-1	M03	x	AP-VMA1410-0	282	1	61		TE-67NT-0N00	—	—	—	—	—	—	VAV-61	VAV-61	Titus	SD	1.55	5	0.14	60	165		Internal	0-1.5" WC	SM		
Building 282	159	Office	AHU -1	AHU -1	VA-1-1	M03	x	AP-VMA1410-0	282	1	62		TE-67NT-0N00	—	—	—	—	—	—	VAV-62	VAV-62	Titus	SD	1.55	5	0.14	60	165		Internal	0-1.5" WC	SM		
Building 282	160	Office	AHU -1	AHU -1	VA-1-1	M03	x	AP-VMA1410-0	282	1	63		TE-67NT-0N00	—	—	—	—	—	—	VAV-63	VAV-63	Titus	SD	1.55	5	0.14	60	165		Internal	0-1.5" WC	SM		
Building 282	157	Office	AHU -1	AHU -1	VA-1-1	M03	x	AP-VMA1410-0	282	1	64		TE-67NT-0N00	—	—	—	—	—	—	VAV-64	VAV-64	Titus	SD	1.55	5	0.14	60	200		Internal	0-1.5" WC	SM		
Building 282	156	Office	AHU -1	AHU -1	VA-1-1	M03	x	AP-VMA1410-0	282	1	65		TE-67NT-0N00	—	—	—	—	—	—	VAV-65	VAV-65	Titus	SD	1.87	7	0.27	60	350		Internal	0-1.5" WC	SM		
Building 282	165	Lounge	AHU -1	AHU -1	VA-2-1	M03	x	AP-VMA1420-0	282	1	66		TE-67NT-0N00	Field Verify				0.6	2.2	VAV-66	VAV-66	Titus	SD	1.50	16	1.40	900	1940		Internal	0-1.5" WC	SM		
Building 282	152	Office	AHU -1	AHU -1	VA-1-1	M03	x	AP-VMA1410-0	282	1	67		TE-67NT-0N00	—	—	—	—	—	—	VAV-67	VAV-67	Titus	SD	1.67	12	0.79	100	840		Internal	0-1.5" WC	SM		
Building 282	154	Office	AHU -1	AHU -1	VA-1-1	M03	x	AP-VMA1410-0	282	1	68		TE-67NT-0N00	—	—	—	—	—	—	VAV-68	VAV-68	Titus	SD	1.31	4	0.09	50	115		Internal	0-1.5" WC	SM		
Building 282	153	Office	AHU -1	AHU -1	VA-1-1	M03	x	AP-VMA1410-0	282	1	69		TE-67NT-0N00	—	—	—	—	—	—	VAV-69	VAV-69	Titus	SD	1.31	4	0.09	50	115		Internal	0-1.5" WC	SM		
Building 282	151	Office	AHU -1	AHU -1	VA-2-1	M03	x	AP-VMA1420-0	282	1	70		TE-67NT-0N00	Field Verify				0.26	2.2	VAV-70	VAV-70	Titus	SD	1.87	8	0.35	60	200		Internal	0-1.5" WC	SM		
Building 282	126	Planning	AHU -1	AHU -1	VA-1-1	M03	x	AP-VMA1410-0	282	1	71		TE-67NT-0N00	—	—	—	—	—	—	VAV-71	VAV-71	Titus	SD	1.67	12	0.79	200	1455		Internal	0-1.5" WC	SM		

AHU-1 ROOM SCHEDULE

BLDG 282

REVISION INFORMATION	Drawing Title: AHU-1 Room Schedule Bldg 282 Room Schedule						
NUMBER: number			1	As-Built		7/28/2004	A.B.
DATE: 07/28/04		REFERENCE DRAWING	NO.	REVISION-LOCATION	ECN	DATE	BY
		Sales Engineer: Waters	Project Manager: Reed	Application Engineer: Radlovic	DRAWN: BY R.R. DATE 7/28/2004	APPROVED: BY K.S. DATE 7/28/2004	
TIME: 11:13 AM	Project Title: Nellis AFB ESPC Energy Savings Performance Contract Las Vegas, Nevada	JOHNSON CONTROLS Systems & Services Division	Branch Information: Johnson Controls, Inc. 3579 Redrock St. Suite B Las Vegas, NV 89103 Phone: (702) 798-1979 Fax: (702) 798-7621		CONTRACT NUMBER: 3307-0028		
extra					DRAWING NUMBER: RS-1		
FILE NAME: RS-1.vsd							

US Army Corps of Engineers Sacramento District

Symbol | Description | Date | Approved

Designed by: A.M.
Dwn by: J.F.
Spec No.: 1304
Reviewed by: S.B
Submitted by: /s/ T NISSEN Chief, Mech/Elec Des. Sec.
Date:
Rev.
Design file no: 229-25-539
Drawing Code: 100%
File name: N39M-815XXX.dwg
Plot date: 02/04/02
Dwg scale: AS NOTED

DEPARTMENT OF THE ARMY
CORPS OF ENGINEERS
SACRAMENTO, CALIFORNIA

SACRAMENTO DISTRICT
IN-HOUSE DESIGN
1325 'J' STREET
SACRAMENTO, CA 95814-2922

NELLIS AFB NEVADA

F/A-22 ADD/ALTER WEAPONS SCHOOL

EXISTING JOHNSON CONTROLS IN BLDG 282

Sheet reference number:

M-815

Location								Room Controller/Sensor						Reheat Valve						Box Information											Actuator Information				
	Room							Controller					Sensor		Valve	Size Valve		Flow	Delta P	Box Type															
Bldg./Flr.	No.	Name	AHU System Name	AHU Mechanical Tag	Visio Ref. Drawing	Mech. Ref. dwg.	P. Sched NZ Addr.	Code No.	NCM Addr.	NZ Trunk	NZ Addr.	CS Model	Code No.	Device Code	Body Style	in.	Cv	GPM lb/hr	psi	Box ID (System Name)	Box Mechanical Tag	Box Manufacturer	Box Type	K Factor	Inlet Size (inches)	Inlet Size (Area)	Clg Min Flow	Clg Max Flow	VMA Box Config	Code No.	Range	Type		Comments
Building 282	160	Auditorium	AHU -2	AHU -2	VA-2-1	M03	x	AP-VMA1420-0	282	1	1		TE-67NT-0N00	Field Verify				4.5	2.2	VAV-1	VAV-1	Titus	SD	1.5	16	1.4	540	1800		Internal	0-1.5" WC	SM		
Building 282	181	Office	AHU -2	AHU -2	VA-2-1	M03	x	AP-VMA1420-0	282	1	2		TE-67NT-0N00	Field Verify				0.26	2.2	VAV-2	VAV-2	Titus	SD	1.31	4	0.09	50	100		Internal	0-1.5" WC	SM		
Building 282	182	Office	AHU -2	AHU -2	VA-2-1	M03	x	AP-VMA1420-0	282	1	3		TE-67NT-0N00	Field Verify				0.26	2.2	VAV-3	VAV-3	Titus	SD	1.31	4	0.09	50	100		Internal	0-1.5" WC	SM		
Building 282	183	Office	AHU -2	AHU -2	VA-2-1	M03	x	AP-VMA1420-0	282	1	4		TE-67NT-0N00	Field Verify				0.29	2.2	VAV-4	VAV-4	Titus	SD	1.87	7	0.27	120	370		Internal	0-1.5" WC	SM		
Building 282	175/176	Office/Lan Stor.	AHU -2	AHU -2	VA-2-1	M03	x	AP-VMA1420-0	282	1	5		TE-67NT-0N00	Field Verify				0.26	2.2	VAV-5	VAV-5	Titus	SD	1.78	9	0.44	200	640		Internal	0-1.5" WC	SM		
Building 282	178/179	Office/Corridor	AHU -2	AHU -2	VA-2-1	M03	x	AP-VMA1420-0	282	1	6		TE-67NT-0N00	Field Verify				0.44	2.2	VAV-6	VAV-6	Titus	SD	1.87	7	0.27	120	360		Internal	0-1.5" WC	SM		
Building 282	177	Office	AHU -2	AHU -2	VA-2-1	M03	x	AP-VMA1420-0	282	1	7		TE-67NT-0N00	Field Verify				0.26	2.2	VAV-7	VAV-7	Titus	SD	1.97	6	0.2	70	220		Internal	0-1.5" WC	SM		
Building 282	184	Briefing	AHU -2	AHU -2	VA-2-1	M03	x	AP-VMA1420-0	282	1	8		TE-67NT-0N00	Field Verify				0.66	2.2	VAV-8	VAV-8	Titus	SD	1.78	9	0.44	200	610		Internal	0-1.5" WC	SM		
Building 282	168/170	Looby/Oper. Center	AHU -2	AHU -2	VA-2-1	M03	x	AP-VMA1420-0	282	1	9		TE-67NT-0N00	Field Verify				1	2.2	VAV-9	VAV-9	Titus	SD	1.67	12	0.79	300	1000		Internal	0-1.5" WC	SM		
Building 282	172	Office	AHU -2	AHU -2	VA-2-1	M03	x	AP-VMA1420-0	282	1	10		TE-67NT-0N00	Field Verify				0.26	2.2	VAV-10	VAV-10	Titus	SD	1.97	6	0.2	100	240		Internal	0-1.5" WC	SM		
Building 282	173	Office	AHU -2	AHU -2	VA-2-1	M03	x	AP-VMA1420-0	282	1	11		TE-67NT-0N00	Field Verify				1.5	2.2	VAV-11	VAV-11	Titus	SD	1.67	12	0.79	330	1100		Internal	0-1.5" WC	SM		
Building 282	174	Office	AHU -2	AHU -2	VA-2-1	M03	x	AP-VMA1420-0	282	1	12		TE-67NT-0N00	Field Verify				0.2	2.2	VAV-12	VAV-12	Titus	SD	1.31	4	0.09	60	120		Internal	0-1.5" WC	SM		
Building 282	189	Office	AHU -2	AHU -2	VA-2-1	M03	x	AP-VMA1420-0	282	1	13		TE-67NT-0N00	Field Verify				0.6	2.2	VAV-13	VAV-13	Titus	SD	1.87	8	0.35	150	500		Internal	0-1.5" WC	SM		
Building 282	187	Briefing	AHU -2	AHU -2	VA-2-1	M03	x	AP-VMA1420-0	282	1	14		TE-67NT-0N00	Field Verify				0.62	2.2	VAV-14	VAV-14	Titus	SD	1.55	5	0.14	80	160		Internal	0-1.5" WC	SM		
Building 282	188	Briefing	AHU -2	AHU -2	VA-2-1	M03	x	AP-VMA1420-0	282	1	15		TE-67NT-0N00	Field Verify				0.62	2.2	VAV-15	VAV-15	Titus	SD	1.55	5	0.14	80	160		Internal	0-1.5" WC	SM		
Building 282	190	Office	AHU -2	AHU -2	VA-2-1	M03	x	AP-VMA1420-0	282	1	16		TE-67NT-0N00	Field Verify				0.5	2.2	VAV-16	VAV-16	Titus	SD	1.97	6	0.2	80	250		Internal	0-1.5" WC	SM		
Building 282	221	Briefing	AHU -2	AHU -2	VA-2-1	M03	x	AP-VMA1420-0	282	1	17		TE-67NT-0N00	Field Verify				0.63	2.2	VAV-17	VAV-17	Titus	SD	1.78	9	0.44	180	600		Internal	0-1.5" WC	SM		
Building 282	219/213/211	Briefing/Corr./Men	AHU -2	AHU -2	VA-2-1	M03	x	AP-VMA1420-0	282	1	18		TE-67NT-0N00	Field Verify				0.63	2.2	VAV-18	VAV-18	Titus	SD	1.78	9	0.44	180	560		Internal	0-1.5" WC	SM		
Building 282	218	Briefing	AHU -2	AHU -2	VA-2-1	M03	x	AP-VMA1420-0	282	1	19		TE-67NT-0N00	Field Verify				0.26	2.2	VAV-19	VAV-19	Titus	SD	1.97	6	0.2	100	240		Internal	0-1.5" WC	SM		
Building 282	220	Briefing	AHU -2	AHU -2	VA-2-1	M03	x	AP-VMA1420-0	282	1	20		TE-67NT-0N00	Field Verify				0.6	2.2	VAV-20	VAV-20	Titus	SD	1.87	8	0.35	140	440		Internal	0-1.5" WC	SM		
Building 282	215	Briefing	AHU -2	AHU -2	VA-2-1	M03	x	AP-VMA1420-0	282	1	21		TE-67NT-0N00	Field Verify				0.52	2.2	VAV-21	VAV-21	Titus	SD	1.97	6	0.2	100	240		Internal	0-1.5" WC	SM		
Building 282	216/217	Briefing/Corridor	AHU -2	AHU -2	VA-2-1	M03	x	AP-VMA1420-0	282	1	22		TE-67NT-0N00	Field Verify				0.78	2.2	VAV-22	VAV-22	Titus	SD	1.78	9	0.44	160	530		Internal	0-1.5" WC	SM		

AHU-2 ROOM SCHEDULE

BLDG 282

REVISION INFORMATION	Drawing Title						
NUMBER number	AHU-2 Room Schedule Bldg 282 Room Schedule		1	As-Built		7/28/2004	A.B.
DATE 07/28/04		REFERENCE DRAWING	NO.	REVISION-LOCATION	ECN	DATE	BY
		Sales Engineer: Waters; Project Manager: Reed; Application Engineer: Radlovic	DRAWN: BY R.R. DATE 7/28/2004	APPROVED: BY K.S. DATE 7/28/2004			
TIME 11:13 AM	Project Title		Branch Information	CONTRACT NUMBER			
extra	Nellis AFB ESPC Energy Savings Performance Contract Las Vegas, Nevada	JOHNSON CONTROLS Systems & Services Division	Johnson Controls, Inc. 3579 Redrock St. Suite B Las Vegas, NV 89103 Phone: (702) 798-1979 Fax: (702) 798-7621	3307-0028			
FILE NAME RS-2.vsd				DRAWING NUMBER RS-2			

US Army Corps of Engineers
Sacramento District

Symbol	Description	Date	Approved

Designed by: A.M.
Dwn by: J.F.
Reviewed by: S.B.
Submitted by: A.V. WISSER
Date:
Rev:
Spec. No.: 1304
Design file no: 229-25-539
Drawing Code: 100%
File name: N39M-B18XXX.dwg
Plot date: 07/04/05
Dwg scale: AS NOTED
Const. Mech/Elec. Spec.

DEPARTMENT OF THE ARMY
CORPS OF ENGINEERS
SACRAMENTO, CALIFORNIA

SACRAMENTO DISTRICT
IN-HOUSE DESIGN
1325 "J" STREET
SACRAMENTO, CA 95814-2922

NEVADA
NELLIS AFB
F/A-22 ADD/ALTER WEAPONS SCHOOL

EXISTING JOHNSON CONTROLS IN BLDG 282

Sheet reference number:
M-816

Border Revised 01/07/02, CDESIGN32.DWG

AHU-1,2,3,5 CONTROL

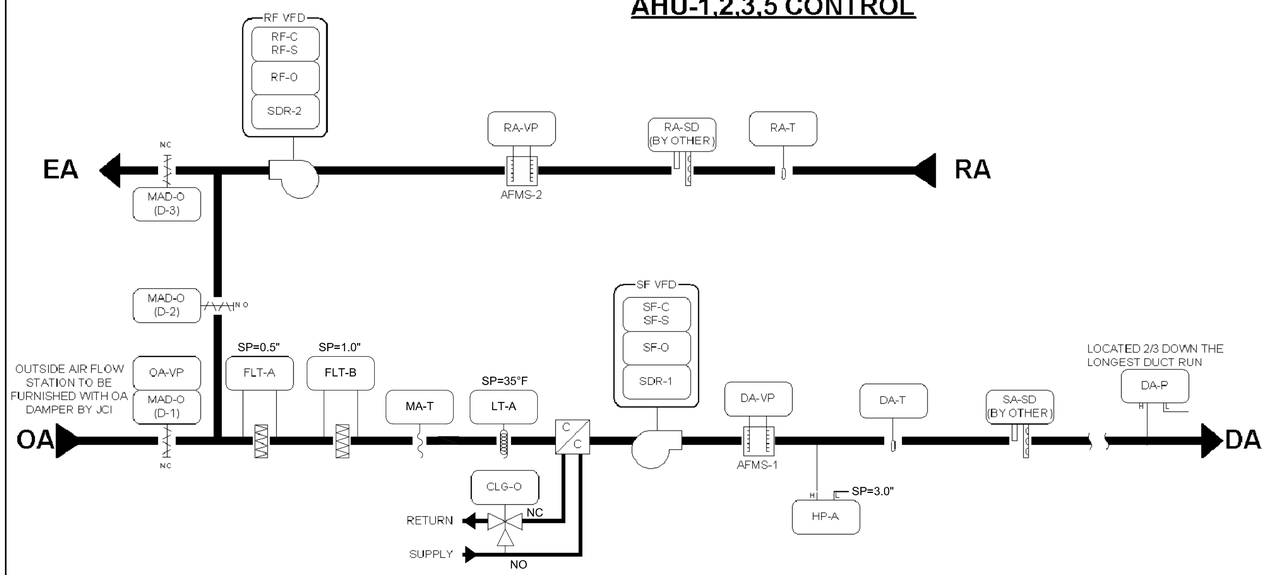

MORNING WARMUP/COOLDOWN: PRIOR TO THE SCHEDULED OCCUPANCY TIME, THE UNIT WILL BE PLACED INTO MORNING WARMUP OR COOLDOWN MODE SUBJECT TO THE AVERAGE SPACE TEMPERATURE AND THE TARGET SPACE TEMPERATURE SETPOINT.

DURING WARMUP, THE OUTSIDE AIR DAMPERS SHALL BE CLOSED, THE SUPPLY FAN WILL RUN CONTINUOUSLY, SPACE REHEAT CONTROL VALVES WILL MODULATE TO MAINTAIN SPACE TEMPERATURE SETPOINT.

DURING COOLDOWN, AND IF ECONOMIZER MODE IS SET, THE SUPPLY FAN WILL RUN CONTINUOUSLY AND THE OUTSIDE AIR DAMPERS WILL OPEN TO MAINTAIN THE CONSTANT DISCHARGE AIR TEMPERATURE SETPOINT.

DURING COOLDOWN, AND IF THE ECONOMIZER MODE IS RESET, THE SUPPLY FAN WILL RUN CONTINUOUSLY, THE OUTSIDE AIR DAMEPRS WILL BE CLOSED AND THE CHILLED WATER VALVE WILL MODULATE TO MAINTAIN THE CONSTANT DISCHARGE AIR TEMPERATURE SETPOINT.

SUPPLY FAN START/STOP: THE SUPPLY FAN WILL BE STARTED ACCORDING TO THE SCHEDULE. IF THE SUPPLY FAN STATUS DOES NOT MATCH THE COMMANDED VALUE, AN ALARM WILL BE GENERATED. WHEN THE SUPPLY FAN STATUS INDICATES THE FAN STARTED, THE CONTROL SEQUENCE WILL BE ENABLED.

RETURN FAN START/STOP: WHEN THE SUPPLY FAN IS STARTED A COMMAND TO THE RETURN FAN WILL BE SENT. IF THE RETURN FAN STATUS DOES NOT MATCH THE COMMANDED VALUE, AN ALARM WILL BE GENERATED.

STATIC PRESSURE CONTROL: THE SUPPLY FAN WILL MODULATE TO MAINTAIN THE DISCHARGE STATIC PRESSURE AT SETPOINT. (FIELD ADJ)

RETURN FAN VOLUME MATCHING: THE RETURN FAN WILL MODULATE TO MAINTAIN A FLOW OUTPUT SETPOINT THAT IS EQUAL TO THE SUPPLY FAN OUTPUT FLOW MINUS AN ADJUSTABLE DIFFERENTIAL.

DISCHARGE AIR CONTROL: THE COOLING VALVE WILL MODULATE IN SEQUENCE TO MAINTAIN THE DISCHARGE AIR TEMPERATURE AT SETPOINT.

ECONOMIZER CONTROL: DURING ECONOMIZER MODE, THE MIXED AIR DAMPERS WILL MODULATE TO MAINTAIN THE MIXED AIR TEMPERATURE SETPOINT, SUBJECT TO MINIMUM OUTSIDE AIR CFM SETPOINT. WHEN ECONOMIZER IS DISABLED, THE MIXED AIR DAMPERS WILL BE POSITIONED FOR MINIMUM AMOUNT OF OUTSIDE AIR CFM.

ECONOMIZER SWITCHOVER: WHEN THE SHARED OUTSIDE AIR TEMPERATURE IS BELOW THE RETURN AIR TEMPERATURE , THE ECONOMIZER WILL BE ENABLED. WHEN THE SHARED OUTSIDE AIR TEMPERATURE RISES ABOVE THE RETURN AIR TEMPERATURE PLUS A DIFFERENTIAL, THE ECONOMIZER WILL BE DISABLED.

NIGHT SETBACK/NIGHT SETUP: WHEN IN "UNOCCUPIED" MODE, THE UNIT WILL CYCLE AS NECESSARY TO MAINTAIN THE SHARED NIGHT SETBACK ZONE TEMPERATURE AT SETPOINT. A DIFFERENTIAL PREVENTS THE UNIT FROM CYCLING EXCESSIVELY. IF AN UNOCCUPIED PUSHBUTTON FROM A SPACE VAV TEMPERAUTRE SENSOR IS SET, THE UNIT WILL BE PLACED INTO OCCUPIED MODE FOR AN ADJUSTABLE PERIOD OF TIME (2 HRS). NIGHT SET BACK (HEATING ONLY - ON AT 52°F, OFF AT 55°F)

SAFETY:

ALL OF THE SAFETY DEVICES ARE MANUAL RESET; THE DEVICE THAT HAS TRIPPED MUST BE MANUALLY RESET BEFORE RESTARTING THE AIR HANDLING UNIT.

IF A TEMPERATURE LOW LIMIT SWITCH SENSES A TEMPERATURE BELOW SETPOINT THE SUPPLY FAN AND RETURN FAN WILL BE SHUTDOWN.

UPON A SIGNAL FROM THE SUPPLY AIR OR RETURN AIR DUCT SMOKE DETECTOR, THE SUPPLY FAN AND RETURN FAN WILL BE SHUTDOWN WHEN TRIGGERED.

IF A HIGH STATIC PRESSURE SWITCH LOCATED AFTER THE SUPPLY FAN SENSES A DISCHARGE PRESSURE THAT IS GREATER THAN SETPOINT, THE SUPPLY FAN AND RETURN FAN WILL BE SHUTDOWN.

SHUTDOWN:

WHEN THE UNIT IS SHUTDOWN BY EITHER A STOP COMMAND OR SYSTEM SAFETY THE UNIT WILL BE SET AS FOLLOWS:

SUPPLY FAN WILL BE OFF
RETURN FAN WILL BE OFF
SUPPLY FAN VFD WILL BE COMMANDED TO 0%
RETURN FAN VFD WILL BE COMMANDED TO 0%
OUTSIDE AIR DAMPER WILL CLOSE
RETURN AIR DAMPER WILL OPEN
EXHAUST AIR DAMPER WILL CLOSE
COOLING VALVE WILL CLOSE

Tag	Point Type	System Name	Object Name	Expanded ID
	B1-8	AHU-1,2,3,5	FLT-B	DIRTY FILTER ALARM
	B1-9	AHU-1,2,3,5	HP-A	HIGH PRESSURE ALARM
	AI-1	AHU-1,2,3,5	RA-VP	Return Vel Press
	AI-2	AHU-1,2,3,5	MA-T	Mixed Air Temp
	AI-3	AHU-1,2,3,5	DA-T	Discharge Air Temp
	AI-4	AHU-1,2,3,5	RA-T	Return Air Temp
	AI-5	AHU-1,2,3,5	S-VP	Supply Vel Press
	AI-6	AHU-1,2,3,5	DA-P	Static Press
	AI-7	AHU-1,2,3,5	OA-VP	Outside Air Vel Press
	BI-1	AHU-1,2,3,5	SF-S	Supply Fan Status
	BI-2	AHU-1,2,3,5	RF-S	Return Fan Status
	BI-3	AHU-1,2,3,5	SA-SD	Supply Air Smoke Detector
	BI-4	AHU-1,2,3,5	RA-SD	Return Air Smoke Detector
	BI-6	AHU-1,2,3,5	LT-A	Low Temperature Alarm
	BI-7	AHU-1,2,3,5	FLT-A	Dirty Filter Alarm
	AO-1	AHU-1,2,3,5	MAD-O	Mixed Air Dmpr Output
	AO-2	AHU-1,2,3,5	CLG-O	Cooling Output
	AO-3	AHU-1,2,3,5	SF-O	Supply Fan Output
	AO-4	AHU-1,2,3,5	RF-O	Return Fan Output
	BO-1	AHU-1,2,3,5	SF-C	Supply Fan Command
	BO-2	AHU-1,2,3,5	RF-C	Return Fan Command
	BO-3	AHU-1,2,3,5		
	BO-4	AHU-1,2,3,5		

SCHEDULE SET POINTS	
SYMBOL	DISCHARGE AIR TEMPERATURE OF
AHU-1	48.4
AHU-2	47.9
AHU-3	53.2
AHU-5	53.6

REVISION INFORMATION
NUMBER: number
DATE: 08/11/05
TIME: 04:26 AM
extra
FILE NAME: AHU-1,2,3,5 Flow.vsd

IN CONSIDERATION OF THE RECEIPT OF THIS DOCUMENT, THE RECIPIENT AGREES NOT TO REPRODUCE, COPY, USE OR TRANSMIT THIS DOCUMENT AND/OR THE INFORMATION THERIN CONTAINED, IN WHOLE OR IN PART, OR TO SUFFER SUCH ACTION BY OTHERS, FOR ANY PURPOSE, EXCEPT WITH THE WRITTEN PERMISSION OF JOHNSON CONTROLS, INC. AND FURTHER AGREES TO SURRENDER SAME TO JOHNSON CONTROLS, INC. UPON DEMAND.

COPYRIGHT JOHNSON CONTROLS, INC. 2005

Drawing Title: **AHU-1,2,3,5 Flow Layout Typical Of 4**

Project Title: **Nellis AFB Building 282 Addition and Renovation Las Vegas, NV**

REFERENCE DRAWING	NO.	REVISION-LOCATION	ECN	DATE	BY

Sales Engineer: AR | Project Manager: RQ | Application Engineer: RQ | DRAWN BY AR DATE 08/10/05 | APPROVED BY DATE

JOHNSON CONTROLS
Systems & Services Division

Branch Information

CONTRACT NUMBER

DRAWING NUMBER: **AH-1-1**

1212

US Army Corps of Engineers
Sacramento District

Approved | Date | Description | Symbol

Rev.
Date: 10/21/05
Design file no: 229-25-539
Drawing Code:
Spec. No.: 1304
Designed by: A.M.
Dwn by: A.M.
Reviewed by: S.B.
Submitted by: N.V. Sander, Chief Const. Mech/Elec. Sec.
File name:
Plot date:
Dwg scale: AS_NOTED

DEPARTMENT OF THE ARMY
CORPS OF ENGINEERS
SACRAMENTO, CALIFORNIA

SACRAMENTO DISTRICT
IN-HOUSE DESIGN
1325 "J" STREET
SACRAMENTO, CA 95814-2922

NELLIS AFB NEVADA
F/A-22 ADD/ALTER WEAPONS SCHOOL
AHU-1,2,3, & 5 VAV SYSTEM CONTROLS

Sheet reference number: M-817

Border Revised 08/30/04, 0203H02.DWG

AUDITORIUM AHU-4 CONTROL

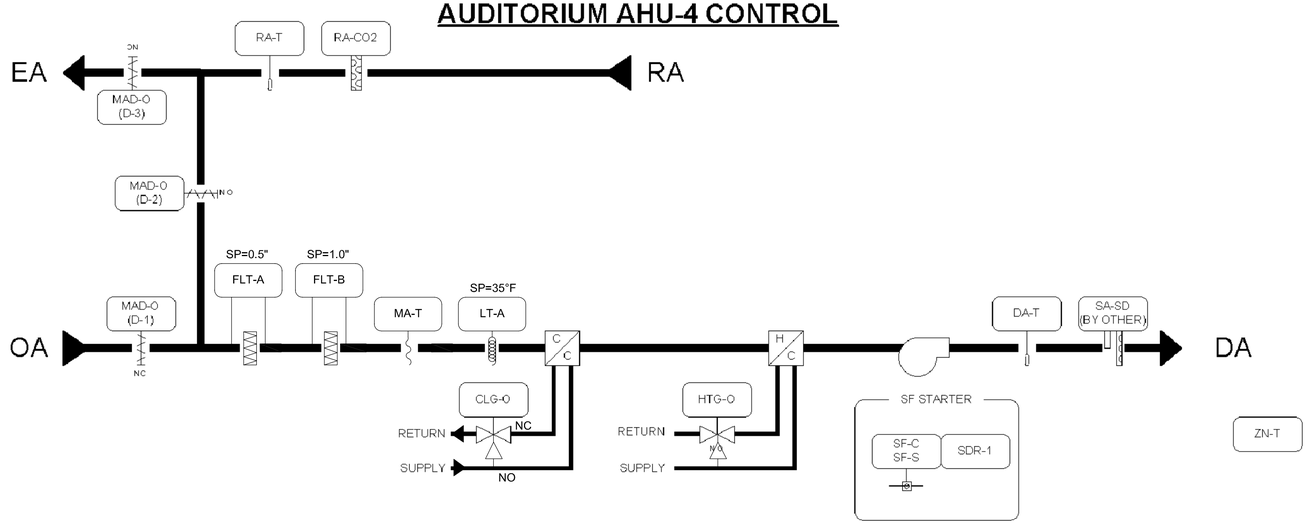

Tag	Point Type	System Name	Object Name	Expanded ID
	AI-1	AHU-4		
	AI-2	AHU-4	MA-T	Mixed Air Temp
	AI-3	AHU-4	DA-T	Disch Air Temp
	AI-4	AHU-4	ZN-T	Zone Temp
	AI-5	AHU-4	RA-T	Return Air Temp
	AI-6	AHU-4	RA-CO2	Return Air CO2
	BI-1	AHU-4	SF-S	Supply Fan Status
	BI-2	AHU-4	SA-SD	Supply Air Smoke Detector
	BI-3	AHU-4	LT-A	Low Temperature Alarm
	BI-4	AHU-4	FLT-A	Dirty Filter Alarm
	BI-6	AHU-4	FLT-B	DIRTY FILTER ALARM
	BI-7	AHU-4		
	AO-1	AHU-4	MAD-O	Mixed Air Dmpr Output
	AO-2	AHU-4	HTG-O	Heating Output
	AO-3	AHU-4	CLG-O	Cooling Valve
	AO-4	AHU-4		
	BO-1	AHU-4	SF-C	Supply Fan Command
	BO-2	AHU-4		
	BO-3	AHU-4		
	BO-4	AHU-4		

MORNING WARMUP/COOLDOWN: PRIOR TO THE SCHEDULED OCCUPANCY TIME, THE UNIT WILL BE PLACED INTO MORNING WARMUP OR COOLDOWN MODE SUBJECT TO THE AVERAGE SPACE TEMPERATURE AND THE TARGET SPACE TEMPERATURE SETPOINT.

DURING WARMUP, THE OUTSIDE AIR DAMPERS SHALL BE CLOSED, THE SUPPLY FAN WILL RUN CONTINUOUSLY, SPACE REHEAT CONTROL VALVES WILL MODULATE TO MAINTAIN SPACE TEMPERATURE SETPOINT.

DURING COOLDOWN, AND IF ECONOMIZER MODE IS SET, THE SUPPLY FAN WILL RUN CONTINUOUSLY AND THE OUTSIDE AIR DAMPERS WILL OPEN TO MAINTAIN THE CONSTANT DISCHARGE AIR TEMPERATURE SETPOINT.

DURING COOLDOWN, AND IF THE ECONOMIZER MODE IS RESET, THE SUPPLY FAN WILL RUN CONTINUOUSLY, THE OUTSIDE AIR DAMEPRS WILL BE CLOSED AND THE CHILLED WATER VALVE WILL MODULATE TO MAINTAIN THE CONSTANT DISCHARGE AIR TEMPERATURE SETPOINT.

SUPPLY FAN START/STOP: THE SUPPLY FAN WILL BE STARTED ACCORDING TO THE SCHEDULE. IF THE SUPPLY FAN STATUS DOES NOT MATCH THE COMMANDED VALUE, AN ALARM WILL BE GENERATED. WHEN THE SUPPLY FAN STATUS INDICATES THE FAN STARTED, THE CONTROL SEQUENCE WILL BE ENABLED.

DISCHARGE AIR CONTROL: THE DISCHARGE AIR TEMPERATURE SETPOINT WILL RESET AS NECESSARY TO MAINTAIN THE ZONE TEMPERATURE SETPOINT AS SENSED BY THE ZONE TEMPERATURE SENSOR. THE MIXED AIR DAMPERS, HEATING VALVE, AND THE COOLING VALVE WILL MODULATE IN SEQUENCE TO MAINTAIN THE DISCHARGE AIR TEMPERATURE AT SETPOINT. (HEATING S.P. = 90°F, COOLING S.P. = 53.2°F)

MIXED AIR LOW LIMIT OVERRIDE: THE MIXED AIR TEMPERATURE WILL OVERRIDE THE MINIMUM POSITION AND CLOSE THE OUTSIDE AIR DAMPER IF A TEMPERATURE IS SENSED BELOW THE SETPOINT. (S.P. = 35°F)

RETURN AIR CO2 OVERRIDE: THE RETURN AIR CO2 SENSOR WILL OVERRIDE THE MINIMUM POSITION AND OPEN THE OUTSIDE AIR DAMPER IF THE RETURN AIR CO2 IS SENSED ABOVE THE SETPOINT, SUBJECT TO MIXED AIR LOW LIMIT OVERRIDE.

ECONOMIZER CONTROL: DURING ECONOMIZER MODE, THE MIXED AIR DAMPERS WILL MODULATE TO MAINTAIN THE DISCHARGE AIR TEMPERATURE SETPOINT, SUBJECT TO RETURN AIR CO2 AND MIXED AIR TEMPERATURE LOW LIMIT. WHEN ECONOMIZER IS DISABLED, THE MIXED AIR DAMPERS WILL BE AT MINIMUM POSITION SUBJECT TO RETURN AIR CO2 AND MIXED AIR TEMPERATURE LOW LIMIT.

ECONOMIZER SWITCHOVER: WHEN THE SHARED OUTSIDE AIR TEMPERATURE IS BELOW THE RETURN AIR TEMPERATURE , THE ECONOMIZER WILL BE ENABLED. WHEN THE SHARED OUTSIDE AIR TEMPERATURE RISES ABOVE THE RETURN AIR TEMPERATURE PLUS A DIFFERENTIAL, THE ECONOMIZER WILL BE DISABLED.

NIGHT SETBACK/NIGHT SETUP: WHEN IN "UNOCCUPIED" MODE, THE UNIT WILL CYCLE AS NECESSARY TO MAINTAIN THE NIGHT SETBACK ZONE TEMPERATURE AT SETPOINT. A DIFFERENTIAL PREVENTS THE UNIT FROM CYCLING EXCESSIVELY.

SAFETY:
ALL OF THE SAFETY DEVICES ARE MANUAL RESET; THE DEVICE THAT HAS TRIPPED MUST BE MANUALLY RESET BEFORE RESTARTING THE AIR HANDLING UNIT. ALARM WILL BE GENERATED
IF A TEMPERATURE LOW LIMIT SWITCH SENSES A TEMPERATURE BELOW SETPOINT THE SUPPLY FAN WILL BE SHUTDOWN.
UPON A SIGNAL FROM THE SUPPLY AIR DUCT SMOKE DETECTOR, THE SUPPLY FAN WILL BE SHUTDOWN WHEN TRIGGERED.

SHUTDOWN:
WHEN THE UNIT IS SHUTDOWN BY EITHER A STOP COMMAND OR SYSTEM SAFETY THE UNIT WILL BE SET AS FOLLOWS:
SUPPLY FAN WILL BE OFF
OUTSIDE AIR DAMPER WILL CLOSE
RETURN AIR DAMPER WILL OPEN
COOLING VALVE WILL CLOSE
HEATING VALVE WILL CLOSE

REVISION INFORMATION
NUMBER: number
DATE: 08/11/05
TIME: 04:38 AM
extra
FILE NAME: AHU-4 Flow.vsd

IN CONSIDERATION OF THE RECEIPT OF THIS DOCUMENT, THE RECIPIENT AGREES NOT TO REPRODUCE, COPY, USE OR TRANSMIT THIS DOCUMENT AND/OR THE INFORMATION THERIN CONTAINED, IN WHOLE OR IN PART, OR TO SUFFER SUCH ACTION BY OTHERS, FOR ANY PURPOSE, EXCEPT WITH THE WRITTEN PERMISSION OF JOHNSON CONTROLS, INC. AND FURTHER AGREES TO SURRENDER SAME TO JOHNSON CONTROLS, INC. UPON DEMAND.

COPYRIGHT JOHNSON CONTROLS, INC. 2005

Drawing Title: **Auditorium AHU-4 Flow Layout**

REFERENCE DRAWING	NO.	REVISION-LOCATION	ECN	DATE	BY

Sales Engineer	Project Manager	Application Engineer	DRAWN		APPROVED	
AR	RQ	RQ	BY AR	DATE 08/10/05	BY	DATE

Project Title: **Nellis AFB Building 282 Addition and Renovation Las Vegas, NV**

JOHNSON CONTROLS
Systems & Services Division

Branch information

CONTRACT NUMBER

DRAWING NUMBER: **AH-4-1**

1224

US Army Corps of Engineers Sacramento District

Symbol	Description	Date	Approved

Designed by: A.M.
Dwn by: A.M.
Reviewed by: S.B.
Submitted by: Chief, Mech/Elec Des. Sec.
Date: 10/21/05
Spec No.: 1304
Design file no: 229-25-539
Drawing Code:
Rev:
File name:
Plot date:
Dwg scale: AS_NOTED

DEPARTMENT OF THE ARMY
CORPS OF ENGINEERS
SACRAMENTO, CALIFORNIA

SACRAMENTO DISTRICT
IN-HOUSE DESIGN
1325 "J" STREET
SACRAMENTO, CA 95814-2922

NEVADA
NELLIS AFB
F/A-22 ADD/ALTER WEAPONS SCHOOL
AHU-4 SYSTEM CONTROLS

Sheet reference number: M-818

VAV BOX WITH REHEAT CONTROL

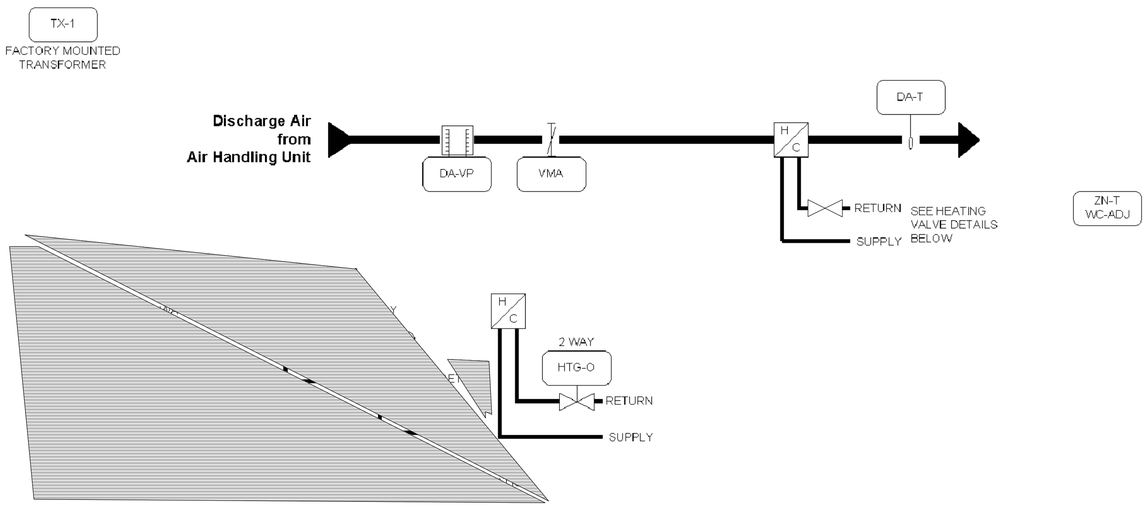

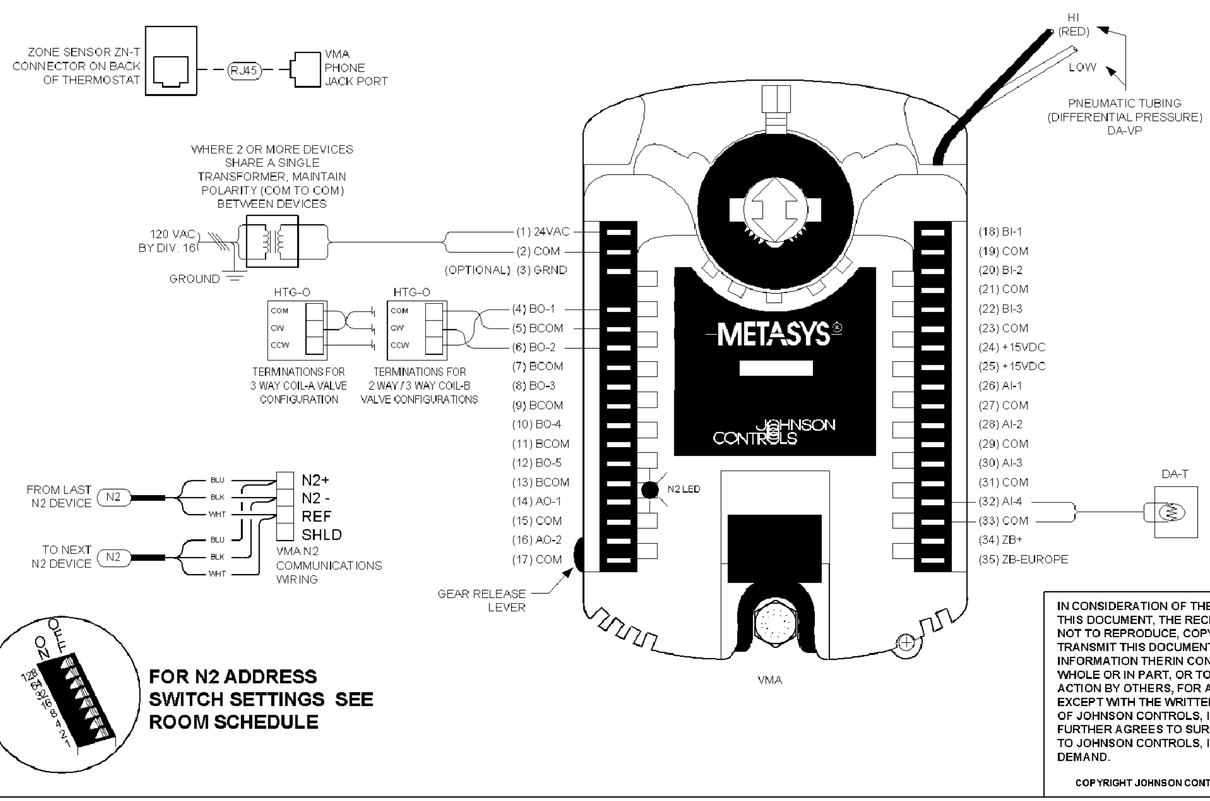

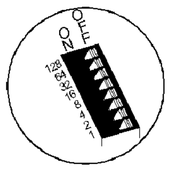

FOR N2 ADDRESS SWITCH SETTINGS SEE ROOM SCHEDULE

DISCHARGE AIR TEMP SENSOR: A DISCHARGE AIR TEMP SENSOR IS PROVIDED ON EACH BOX FOR MONITORING PURPOSES.

OCCUPIED MODE: WHEN THE ZONE TEMPERATURE IS BETWEEN THE OCCUPIED HEATING AND COOLING SETPOINTS (INSIDE OF THE BIAS), THE PRIMARY AIR DAMPER WILL BE AT THE MINIMUM CFM AND THE REHEAT VALVE WILL BE FULLY CLOSED. ON A RISE IN ZONE TEMPERATURE ABOVE THE COOLING SETPOINT, THE PRIMARY AIR DAMPER WILL INCREASE THE CFM AND THE REHEAT VALVE REMAINS FULLY CLOSED. ON A DROP IN ZONE TEMPERATURE BELOW THE HEATING SETPOINT, THE REHEAT VALVE MODULATES OPEN AND THE DAMPER IS CONTROLLED TO PROVIDE A MINIMUM CFM.

UNOCCUPIED (NIGHT SETBACK) MODE: WHEN THE AIR HANDLING UNIT SHUTS DOWN, ALL BOX CONTROLLERS ARE INDEXED TO UNOCCUPIED MODE. WHEN THE ZONE TEMPERATURE IS BETWEEN THE UNOCCUPIED HEATING AND COOLING SETPOINTS (INSIDE OF THE BIAS), THE PRIMARY AIR DAMPER WILL BE AT THE MINIMUM CFM, AND THE REHEAT VALVE WILL BE FULLY CLOSED. ON A RISE IN ZONE TEMPERATURE ABOVE THE UNOCCUPIED COOLING SETPOINT, THE PRIMARY AIR DAMPER WILL INCREASE THE CFM (IF AVAILABLE), AND THE REHEAT VALVE REMAINS FULLY CLOSED. ON A DROP IN ZONE TEMPERATURE BELOW THE UNOCCUPIED HEATING SETPOINT, THE REHEAT VALVE MODULATES OPEN, AND THE DAMPER IS CONTROLLED TO PROVIDE A MINIMUM CFM. IF THE UNOCCUPIED OVERRIDE PUSHBUTTON IS SET, THE VAV BOX WILL BE PLACED INTO OCCUPIED MODE AND ITS ASSOCIATED AIR HANDLING UNIT WILL BE PLACED INTO OCCUPIED MODE.

FOR BOX PARAMETERS AND SETTINGS SEE THE ROOM SCHEDULE

(HEATING NIGHT SET BACK 55°F, COOLING NIGHT SET BACK 85°F)

IN CONSIDERATION OF THE RECEIPT OF THIS DOCUMENT, THE RECIPIENT AGREES NOT TO REPRODUCE, COPY, USE OR TRANSMIT THIS DOCUMENT AND/OR THE INFORMATION THERIN CONTAINED, IN WHOLE OR IN PART, OR TO SUFFER SUCH ACTION BY OTHERS, FOR ANY PURPOSE, EXCEPT WITH THE WRITTEN PERMISSION OF JOHNSON CONTROLS, INC. AND FURTHER AGREES TO SURRENDER SAME TO JOHNSON CONTROLS, INC. UPON DEMAND.

COPYRIGHT JOHNSON CONTROLS, INC. 2005

Drawing Title: **VAV with Reheat Control**

REFERENCE DRAWING	NO.	REVISION-LOCATION	ECN	DATE	BY

Sales Engineer	Project Manager	Application Engineer	DRAWN	APPROVED
AR	RQ	RQ	BY AR DATE 08/10/05	BY DATE

Project Title: **Nellis AFB Building 282 Addition and Renovation Las Vegas, NV**

JOHNSON CONTROLS — Systems & Services Division

Branch Information

CONTRACT NUMBER

DRAWING NUMBER: **VAV-2-1**

5003

US Army Corps of Engineers Sacramento District

Symbol	Description	Date	Approved

Rev.

Date: 10/21/05
Design file no: 229-25-539
Drawing Code:
File name:
Plot date:
Dwg scale: AS_NOTED

Designed by: A.M.
Dwn by: A.M.
Spec No.: 1304
Reviewed by: S.B.
Submitted by: Chief, Tech/Doc Div. Sec.
Approved by: Chief

DEPARTMENT OF THE ARMY
CORPS OF ENGINEERS
SACRAMENTO, CALIFORNIA

SACRAMENTO DISTRICT
IN-HOUSE DESIGN
1325 "J" STREET
SACRAMENTO, CA 95814-2922

NEVADA
NELLIS AFB
F/A-22 ADD/ALTER WEAPONS SCHOOL
VAV REHEAT BOX SYSTEM CONTROLS

Sheet reference number: M-819

Border: Revised 08/30/04, CEFSR02.DWG

COOLING ONLY VAV BOX CONTROLS

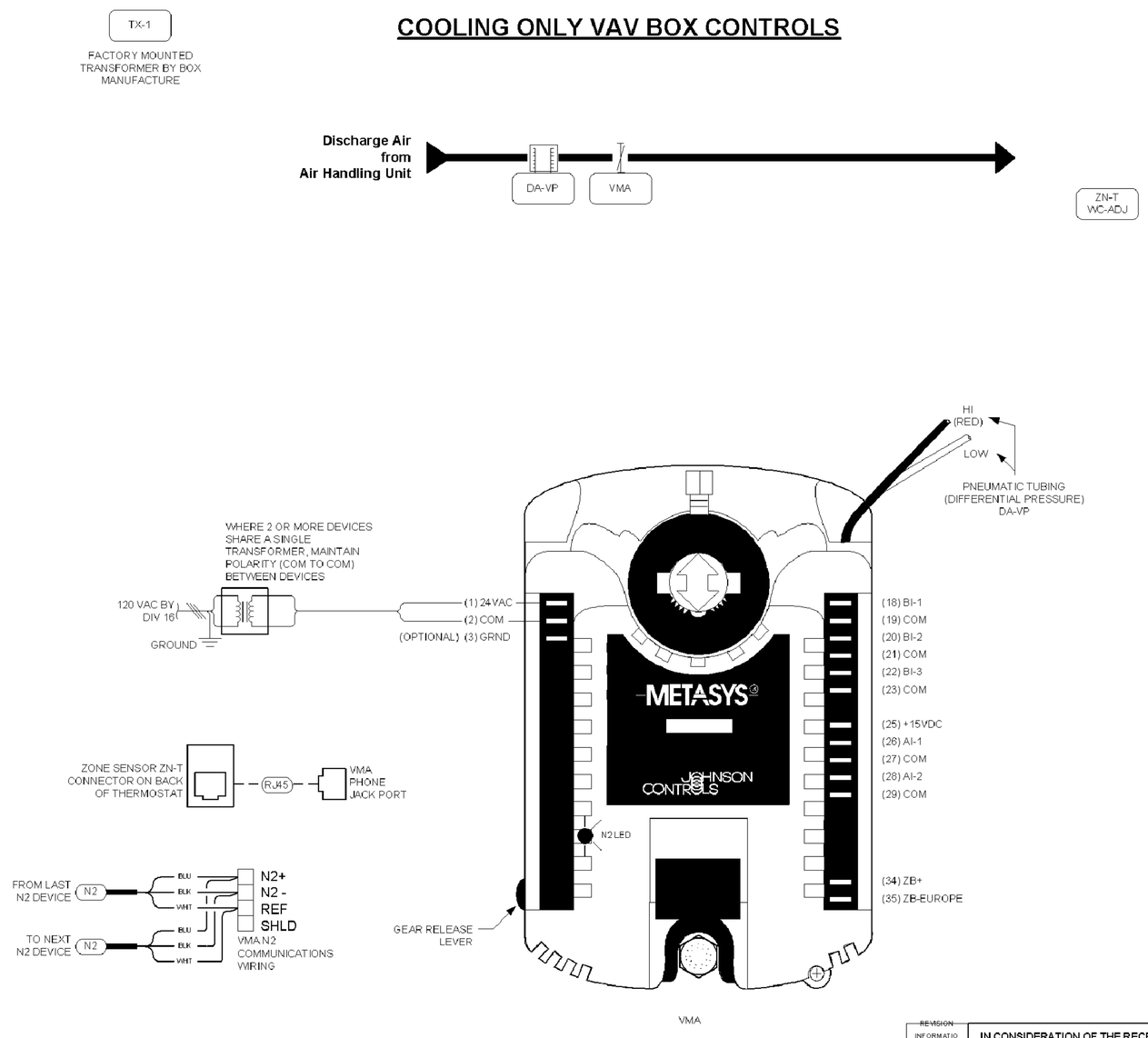

OCCUPIED MODE: WHEN THE ZONE TEMPERATURE IS BETWEEN THE OCCUPIED HEATING AND COOLING SETPOINTS (INSIDE OF THE BIAS), THE PRIMARY AIR DAMPER WILL BE AT THE MINIMUM CFM. ON A RISE IN ZONE TEMPERATURE ABOVE THE COOLING SETPOINT, THE PRIMARY AIR DAMPER WILL INCREASE THE CFM. ON A DROP IN ZONE TEMPERATURE BELOW THE HEATING SETPOINT, THE DAMPER IS CONTROLLED TO PROVIDE A MINIMUM CFM.

UNOCCUPIED (NIGHT SETBACK) MODE: WHEN THE AIR HANDLING UNIT SHUTS DOWN, ALL BOX CONTROLLERS ARE INDEXED TO UNOCCUPIED MODE. WHEN THE ZONE TEMPERATURE IS BETWEEN THE UNOCCUPIED HEATING AND COOLING SETPOINTS (INSIDE OF THE BIAS), THE PRIMARY AIR DAMPER WILL BE AT THE MINIMUM CFM. ON A RISE IN ZONE TEMPERATURE ABOVE THE UNOCCUPIED COOLING SETPOINT, THE PRIMARY AIR DAMPER WILL INCREASE THE CFM (IF AVAILABLE). IF THE UNOCCUPIED OVERRIDE PUSHBUTTON IS SET, THE VAV BOX WILL BE PLACED INTO OCCUPIED MODE AND ITS ASSOCIATED AIR HANDLING UNIT WILL BE PLACED INTO OCCUPIED MODE.

FOR BOX PARAMETERS AND SETTINGS SEE THE ROOM SCHEDULE

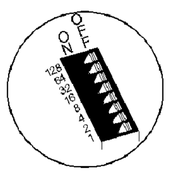

FOR N2 ADDRESS SWITCH SETTINGS SEE ROOM SCHEDULE

REVISION INFORMATION	
NUMBER	number
DATE	08/11/05
TIME	08:59 AM
extra	
FILENAME	Clg Only VAV's Flow.vsd

IN CONSIDERATION OF THE RECEIPT OF THIS DOCUMENT, THE RECIPIENT AGREES NOT TO REPRODUCE, COPY, USE OR TRANSMIT THIS DOCUMENT AND/OR THE INFORMATION THERIN CONTAINED, IN WHOLE OR IN PART, OR TO SUFFER SUCH ACTION BY OTHERS, FOR ANY PURPOSE, EXCEPT WITH THE WRITTEN PERMISSION OF JOHNSON CONTROLS, INC. AND FURTHER AGREES TO SURRENDER SAME TO JOHNSON CONTROLS, INC. UPON DEMAND.

COPYRIGHT JOHNSON CONTROLS, INC. 2005

Drawing Title: **Cooling Only VAV Box Controls**

REFERENCE DRAWING	NO.	REVISION-LOCATION	ECN	DATE	BY

Sales Engineer	Project Manager	Application Engineer	DRAWN		APPROVED	
AR	RQ	RQ	BY AR	DATE 08/10/05	BY	DATE

Project Title: **Nellis AFB Building 282 Addition and Renovation Las Vegas, NV**

JOHNSON CONTROLS — Systems & Services Division

Branch Information

CONTRACT NUMBER

DRAWING NUMBER: **VAV-1-1**

5026

US Army Corps of Engineers Sacramento District

Symbol	Description	Date	Approved

Designed by: A.M. | Dwn by: A.M. | Spec No.: 1304 | Reviewed by: S.B. | Date: 10/21/05 | Design file no: 229-25-539 | Drawing Code: | Rev. | File name: | Plot date: | Dwg scale: AS_NOTED

Submitted by: W. Schuler, Chief, Mech/Elec. Sec.

DEPARTMENT OF THE ARMY CORPS OF ENGINEERS SACRAMENTO, CALIFORNIA

SACRAMENTO DISTRICT IN-HOUSE DESIGN 1325 J STREET SACRAMENTO, CA 95814-2922

NEVADA

NELLIS AFB

F/A-22 ADD/ALTER WEAPONS SCHOOL

VAV COOLING ONLY BOY SYSTEM CONTROLS

Sheet reference number: M-820

Border Revised: 08/30/04 CCS3/07/2.DWG

HOT WATER BOILER SYSTEM CONTROL
(TYPICAL FOR 3 BOILER ROOMS)

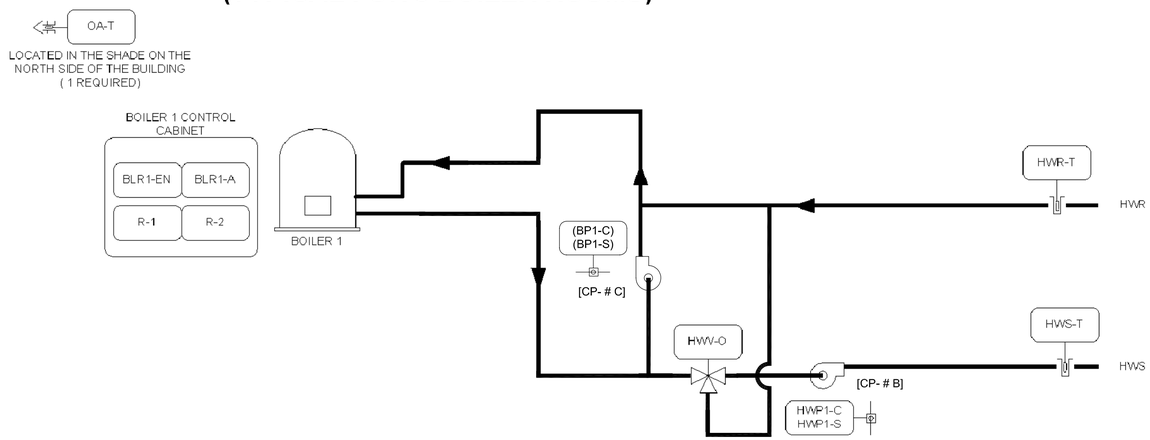

Tag	Point Type	System Name	Object Name	Expanded ID
	DO-3	HWS-n	BLR1-EN	Boiler 1 Enable
	DO-4	HWS-n	BP1-C	Boiler Pump 1 Command
	DO-5	HWS-n	HWP1-C	Hot Water Pump 1 Command
	DO-6			
	DO-7			
	DO-8			
	DI-1	HWS-n	BLR1-A	Boiler 1 Alarm
	DI-2	HWS-n	BP1-S	Boiler Pump 1 Status
	DI-3	HWS-n	HWP1-S	Hot Water Pump 1 Status
	DI-4			
	DI-5			
	DI-6			
	DI-7			
	DI-8			
	AI-1	HWS-n	OA-T	Outdoor Air Temp
	AI-2	HWS-n	HWS-T	Hot Water Supply Temp
	AI-3	HWS-n	HWR-T	Hot Water Return Temp
	AI-4			
	AI-5			
	AI-6			
	AI-7			
	AI-8			
	AO-1	HWS-n	HWV-O	Hot Water Valve Output
	AO-2			
	AO-9			
	AO-10			
	AO-11			
	AO-12			
	AO-13			
	AO-14			

OPERATING PARAMENTERS

FUNCTION	SETPOINT	REMARKS
PRIMARY SYSTEM SUPPLY TEMPERATURE	180 DEG F	OA TEMP = 35 DEG F: PRIMARY SYSTEM SETPOINT = 180 DEG F OA TEMP = 60 DEG F: PRIMARY SYSTEM SUPPLY SETPOINT = 100 DEG F

Hot Water Boiler System Control

HOT WATER PUMP CONTROL: THE HOT WATER PUMP WILL AUTOMATICALLY START WHEN THE OUTSIDE AIR TEMPERATURE FALLS BELOW THE SYSTEM ENABLE SETPOINT(60F). WHEN THE OUTSIDE AIR TEMPERATURE RISES ABOVE THIS SETPOINT, THE HOT WATER PUMPS WILL TURN OFF. WHEN ENABLED, THE PUMP WILL START AND RUN CONTINUOUSLY. WHENEVER THE SYSTEM IS COMMANDED OFF, THE BOILER HOT WATER PUMP WILL RUN FOR A PERIOD OF TIME (3 MINUTES) TO DISPATE THE HEAT IN THE SYSTEM.

HOT WATER VALVE CONTROL: THE HOT WATER MIXING VALVE WILL MODULATE TO MAINTAIN THE HOT WATER SUPPLY TEMPERATURE AT A SETPOINT THAT IS RESET INVERSLY TO THE OUTSIDE AIR TEMPERATURE WHEN THE HOT WATER PUMP HAS A STATUS OF ON.

BOILER CONTROL: THE BOILER CONTROL SEQUENCE WILL BEGIN WHEN THE HOT WATER PUMP HAS A STATUS OF ON. WHEN A BOILER ENABLE COMMAND IS SENT, THE BOILER AND HOT WATER PUMP WILL TURN ON AND WILL MAINTAIN THE WATER CIRCULATING IN THE BOILER AT A TEMPERATURE SET BY THE CONTROLS THAT ARE PART OF THE BOILER PACKAGE. THE BOILERS SAFETIES CIRCUIT WILL BE MONITORED AND THE SYSTEM WILL REPORT A GENERAL ALARM CONDITION IF A SAFETY IS TRIPPED. A MANUAL RESET OF THE BOILER SAFETY WILL BE REQUIRED BEFORE THE BOILER WILL BE RESTARTED.

REVISION INFORMATION
NUMBER: number
DATE: 08/11/05
TIME: 03:46 AM
extra
FILE NAME: HWS Flow(1).vsc

IN CONSIDERATION OF THE RECEIPT OF THIS DOCUMENT, THE RECIPIENT AGREES NOT TO REPRODUCE, COPY, USE OR TRANSMIT THIS DOCUMENT AND/OR THE INFORMATION THERIN CONTAINED, IN WHOLE OR IN PART, OR TO SUFFER SUCH ACTION BY OTHERS, FOR ANY PURPOSE, EXCEPT WITH THE WRITTEN PERMISSION OF JOHNSON CONTROLS, INC. AND FURTHER AGREES TO SURRENDER SAME TO JOHNSON CONTROLS, INC. UPON DEMAND.

COPYRIGHT JOHNSON CONTROLS, INC. 2005

Drawing Title
Hot Water Boiler System Control
Typical for 3 Boiler Rooms

Project Title
Nellis Air Force Base
Building 282
Addition and Renovations
Las Vegas, NV

REFERENCE DRAWING	NO.	REVISION-LOCATION	ECN	DATE	BY

Sales Engineer	Project Manager	Application Engineer	DRAWN		APPROVED	
AR	RQ	RQ	BY AR	DATE 08/10/05	BY	DATE

JOHNSON CONTROLS
Systems & Services Division

Branch Information

CONTRACT NUMBER

DRAWING NUMBER
HWS-1-1

8003

US Army Corps of Engineers
Sacramento District

Symbol	Description	Date	Approved

Designed by: A.M.
Dwn by: A.M.
Reviewed by: S.B.
Submitted by: Al Dominguez Chief Const. Mech/Elec Sec.
Date: 10/21/05
Spec No.: 1304
Design file no: 229-25-539
Drawing Code:
Rev:
File name:
Plot date:
Dwg scale: AS_NOTED

DEPARTMENT OF THE ARMY
CORPS OF ENGINEERS
SACRAMENTO, CALIFORNIA

SACRAMENTO DISTRICT
IN-HOUSE DESIGN
1325 "J" STREET
SACRAMENTO, CA 95814-2922

NELLIS AFB NEVADA
F/A-22 ADD/ALTER WEAPONS SCHOOL
HOT WATER SYSTEM CONTROLS

Sheet reference number:
M-821

Boiler Revised 06/30/04 COSMTD2.DWG

AIR COOLED CHILLED WATER SYSTEM CONTROL
(TYPICAL FOR 3 AIR COOLED CHILLERS)

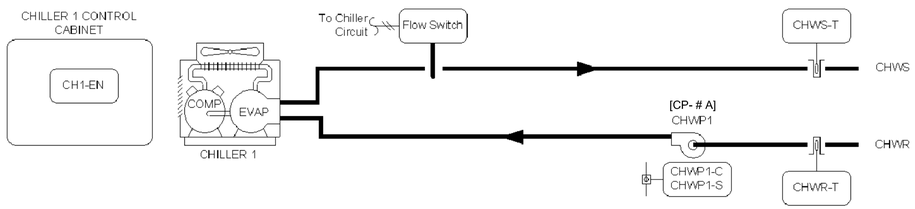

Tag	Point Type	System Name	Object Name	Expanded ID
	DO-3		CH1-EN	Chiller 1 Enable
	DO-4		CHWP1-C	Chill Water Pump 1 Cmd
	DO-5			
	DO-6			
	DO-7			
	DO-8			
	DI-1		CHWP1-S	Chill Water Pump 1 Stat
	DI-2			
	DI-3			
	DI-4			
	DI-5			
	DI-6			
	DI-7			
	DI-8			
	AI-1			
	AI-2		CHWS-T	Chill Water Supply Temp
	AI-3		CHWR-T	Chill Water Return Temp
	AI-4			
	AI-5			
	AI-6			
	AI-7			
	AI-8			
	AO-1			
	AO-2			
	AO-9			
	AO-10			
	AO-11			
	AO-12			
	AO-13			
	AO-14			

Air Cooled Chiller Control

CHILLED WATER PUMP CONTROL: THE CHILLED WATER PUMP WILL AUTOMATICALLY START WHEN THE OUTSIDE AIR TEMPERATURE RISES ABOVE THE SYSTEM ENABLE SETPOINT (72F). WHEN THE OUTSIDE AIR TEMPERATURE FALLS BELOW THIS SETPOINT, THE CHILLED WATER PUMPS WILL TURN OFF. WHEN ENABLED, THE PUMP WILL START AND RUN CONTINUOUSLY. IF FOR ANY REASON ITS STATUS DOES NOT MATCH ITS COMMANDED VALUE AN ALARM WILL BE GENERATED. WHENEVER THE SYSTEM IS COMMANDED OFF, THE CHILLED WATER PUMP WILL RUN FOR A PERIOD OF TIME (5 MINUTES).

CHILLER CONTROL: THE CHILLER WILL BE ENABLED WHEN THE CHILLED WATER PUMP HAS A STATUS OF ON. THE CHILLER VIA ITS INTERNAL CONTROLS WILL MAINTAIN THE CHILLED WATER SUPPLY TEMPERATURE AT SETPOINT, SUBJECT TO IN-LINE FLOW SWITCH. IF THE CHILLED WATER SUPPLY TEMPERATURE RISES ABOVE THE HIGH LIMIT SETPOINT AFTER OPERATING FOR A PERIOD OF TIME, AN ALARM WILL BE GENERATED.

REVISION INFORMATION
NUMBER: number
DATE: 08/11/05
TIME: 04:16 AM
extra
FILE NAME: CHWS Flow(1).vsd

IN CONSIDERATION OF THE RECEIPT OF THIS DOCUMENT, THE RECIPIENT AGREES NOT TO REPRODUCE, COPY, USE OR TRANSMIT THIS DOCUMENT AND/OR THE INFORMATION THERIN CONTAINED, IN WHOLE OR IN PART, OR TO SUFFER SUCH ACTION BY OTHERS, FOR ANY PURPOSE, EXCEPT WITH THE WRITTEN PERMISSION OF JOHNSON CONTROLS, INC. AND FURTHER AGREES TO SURRENDER SAME TO JOHNSON CONTROLS, INC. UPON DEMAND.

COPYRIGHT JOHNSON CONTROLS, INC. 2005

Drawing Title
Air Cooled Chilled Water System Control
Typical for 3 Chillers

REFERENCE DRAWING	NO.	REVISION-LOCATION	ECN	DATE	BY

Sales Engineer	Project Manager	Application Engineer	DRAWN		APPROVED	
AR	RQ	RQ	BY AR	DATE 08/10/05	BY	DATE

Project Title
Nellis AFB
Building 282
Addition and Renovation
Las Vegas, NV

JOHNSON CONTROLS
Systems & Services Division

Branch Information

CONTRACT NUMBER

DRAWING NUMBER
CHWS-1-1

8:10:1

US Army Corps of Engineers
Sacramento District

Symbol	Description	Date	Approved

Designed by: A.M.
Dwn by: A.M.
Spec No.: 1304
Reviewed by: S.B.
Submitted by: M. Sexton, Chief Const. Mech/Elec. Sec.
Date: 10/21/05
Design file no: 229-25-539
Drawing Code:
Rev:
File name:
Plot date:
Dwg scale: AS_NOTED

DEPARTMENT OF THE ARMY
CORPS OF ENGINEERS
SACRAMENTO, CALIFORNIA

SACRAMENTO DISTRICT
IN-HOUSE DESIGN
1325 "J" STREET
SACRAMENTO, CA 95814-2922

NEVADA
NELLIS AFB
F/A-22 ADD/ALTER WEAPONS SCHOOL
CHILLED WATER SYSTEM CONTROLS

Sheet reference number:
M-822

Border: Revised 08/30/04 CDSDATA2.DWG

EXHAUST FAN CONTROL

(TYPICAL FOR EF-2,3,4,7,8,9)

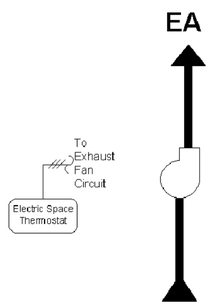

COMPUTER ROOM AIR CONDITIONING UNIT CONTROL

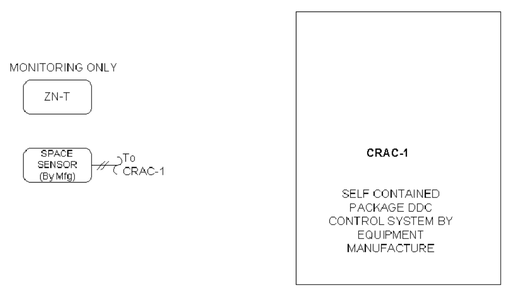

EXHAUST FAN EF-11

KITCHEN EXHAUST FAN PUSH BUTTON WITH LIGHT.

EXHAUST FAN EF-10

EXHAUST FAN SHALL RUN CONTINUALLY.

EXHAUST FAN EF-6

EXHAUST FAN SHALL BE INTERLOCKED WITH LIGHTS.

EXHAUST FANS EF-2,3,4,7,8,9

EXHAUST FANS SHALL CYCLE TO MAINTAIN SPACE TEMPERAURE SETPOINT. AS TEMPERATURE RISES ABOVE SETPOINT, EXHAUST FAN SHALL BE ON. AS TEMPERATURE FALLS BELOW SETPOINT, EXHAUST FAN SHALL BE OFF. (SET POINT 95°F)

EXISTING EXHAUST FANS EF-1 AND EF-5

DURING THE OCCUPIED MODE, EXHAUST FANS SHALL START WHEN THEIR RESPECTIVE AIR HANDLING UNIT STARTS. DURING UNOCCUPIED MODE, MORNING WARMUP/COOLDOWN MODE, THE EXHAUST FAN SHALL BE OFF.

- EF-1 TO BE INTERLOCKED WITH AHU-5
- EF-5 TO BE INTERLOCKED WITH AHU-3
- EXISTING EXHAUST FAN FOR ROOMS 1079, 1080, AND 1081 SHALL BE INTERLOCKED WITH AHU-1.
- EXISTING EXHAUST FANS FOR ROOMS 1113, 1111, AND 1110 SHALL BE INTERLOCKED WITH AHU-2.

COMPUTER ROOM AIR CONDITIONING UNIT (CRAC-1)

COMPUTER ROOM AIR CONDITIONING UNIT CRAC-1 IS PROVIDED WITH ITS OWN PACKAGED DDC CONTROL SYSTEM. ATC CONTRACTOR SHALL FIELD INSTALL REMOTE SPACE TEMPERATURE SENSOR. REMOTE SPACE TEMPERATURE SENSOR IS FURNISHED WITH CRAC-1.

PROVIDE ZONE TEMPERATURE SENSOR CONNECTED TO BMS TO MONITOR SPACE TEMPERATURE.

REVISION INFORMATION	
NUMBER	number
DATE	09/11/05
TIME	04:56 AM
extra	
FILE NAME	Exhaust Fan Flow.vsd

IN CONSIDERATION OF THE RECEIPT OF THIS DOCUMENT, THE RECIPIENT AGREES NOT TO REPRODUCE, COPY, USE OR TRANSMIT THIS DOCUMENT AND/OR THE INFORMATION THERIN CONTAINED, IN WHOLE OR IN PART, OR TO SUFFER SUCH ACTION BY OTHERS, FOR ANY PURPOSE, EXCEPT WITH THE WRITTEN PERMISSION OF JOHNSON CONTROLS, INC. AND FURTHER AGREES TO SURRENDER SAME TO JOHNSON CONTROLS, INC. UPON DEMAND.

COPYRIGHT JOHNSON CONTROLS, INC. 2005

Drawing Title

Exhaust Fan Flow Diagram
CRAC Unit Control

REFERENCE DRAWING	NO.	REVISION-LOCATION	ECN	DATE	BY

Sales Engineer	Project Manager	Application Engineer	DRAWN		APPROVED	
AR	RQ	RQ	BY AR	DATE 08/10/05	BY	DATE

Project Title

Nellis AFB
Building 282
Addition and Renovation
Las Vegas, NV

JOHNSON CONTROLS
Systems & Services Division

Branch Information

CONTRACT NUMBER

DRAWING NUMBER

EF-1-1

6008

US Army Corps of Engineers
Sacramento District

Symbol	Description	Date	Approved

Rev.

Date: 10/21/05
Design file no: 229-25-539
Drawing Code:
File name:
Plot date:
Dwg scale: AS_NOTED

Designed by: A.M.
Dwn by: A.M.
Spec. No.: 1304
Reviewed by: S.B.
Submitted by: N/A Section Chief
Chief, Mech/Elec Des. Sec.

DEPARTMENT OF THE ARMY
CORPS OF ENGINEERS
SACRAMENTO, CALIFORNIA

SACRAMENTO DISTRICT
IN-HOUSE DESIGN
1325 J STREET
SACRAMENTO, CA 95814-2922

NEVADA
NELLIS AFB
F/A-22 ADD/ALTER WEAPONS SCHOOL
EXHAUST FAN & COMPUTER ROOM UNIT SYSTEM CONTROLS

Sheet reference number:
M-823

Border Revised 08/30/04 CDESIGN2.DWG

FAN COIL UNIT CONTROL

TX-1

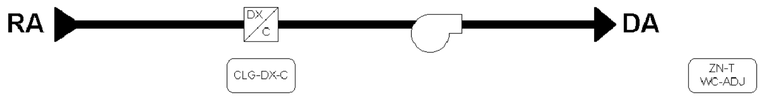

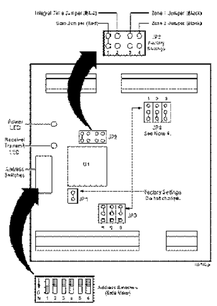

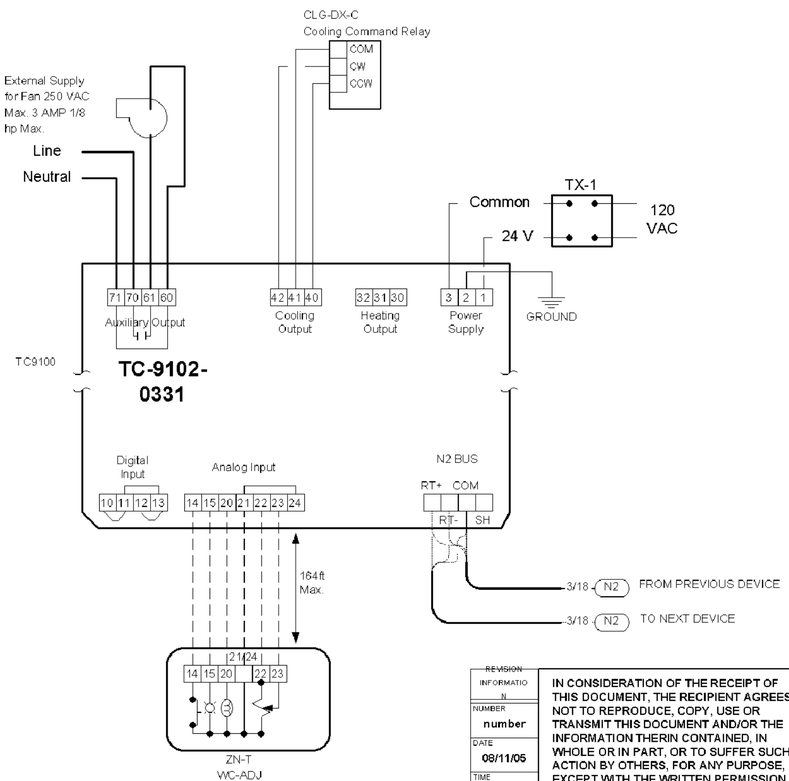

Table 13: Addresses Format

Switch Number	1	2	3	4	5	6	Zone 1 Jumper	Zone 2 Jumper
Decimal Equivalent	1	2	4	8	16	32	64	128

Table 14: Example (Address 43)

Switch Number	1	2	3	4	5	6	Zone 1 Jumper	Zone 2 Jumper
Switch Position	On	On	Off	On	Off	On	Out	Out
Decimal Equivalent 43 =	1 +	2 +	0 +	8 +	0 +	32 +	0	0

Note: The Metasys (or Companion) Facility Management System (FMS) uses this address for polling and commanding.

OCCUPIED MODE: DURING THIS MODE THE FAN WILL RUN CONTINUOUSLY. WHEN THE ROOM TEMPERATURE IS BELOW THE COOLING SETPOINT, THE DX COOLING WILL DE- ENERGIZE. ON A RISE IN ROOM TEMPERATURE ABOVE THE COOLING SETPOINT, THE DX COOLING WILL ENERGIZE.

REVISION INFORMATION	
NUMBER	number
DATE	08/11/05
TIME	04:52 AM
extra	
FILE NAME	FCU Flow.vsd

IN CONSIDERATION OF THE RECEIPT OF THIS DOCUMENT, THE RECIPIENT AGREES NOT TO REPRODUCE, COPY, USE OR TRANSMIT THIS DOCUMENT AND/OR THE INFORMATION THERIN CONTAINED, IN WHOLE OR IN PART, OR TO SUFFER SUCH ACTION BY OTHERS, FOR ANY PURPOSE, EXCEPT WITH THE WRITTEN PERMISSION OF JOHNSON CONTROLS, INC. AND FURTHER AGREES TO SURRENDER SAME TO JOHNSON CONTROLS, INC. UPON DEMAND.

COPYRIGHT JOHNSON CONTROLS, INC. 2005

Drawing Title: **Fan Coil Unit Control**

REFERENCE DRAWING	NO.	REVISION-LOCATION	ECN	DATE	BY

Sales Engineer	Project Manager	Application Engineer	DRAWN	APPROVED
AR	RQ	RQ	BY AR DATE 08/10/05	BY DATE

Project Title: **Nellis AFB Building 282 Addition and Renovation Las Vegas, NV**

JOHNSON CONTROLS
Systems & Services Division

Branch Information

CONTRACT NUMBER

DRAWING NUMBER: **FC-1-1**

6008

US Army Corps of Engineers Sacramento District

Symbol	Description	Date	Approved

Rev.

Date: 10/21/05
Design file no: 229-25-539
Drawing Code:
File name:
Plot date:
Dwg scale: AS_NOTED

Designed by: A.M.
Dwn by: A.M.
Spec. No.: 1304
Reviewed by: S.B.
Submitted by: Chief, Mech/Elec. Sec.

DEPARTMENT OF THE ARMY
CORPS OF ENGINEERS
SACRAMENTO, CALIFORNIA

SACRAMENTO DISTRICT
IN-HOUSE DESIGN
1325 J STREET
SACRAMENTO, CA 95814-2922

NEVADA

NELLIS AFB

F/A-22 ADD/ALTER WEAPONS SCHOOL

FAN COIL SYSTEM CONTROLS

Sheet reference number: M-824

Border Revised 08/30/04 CD250702.DWG

JOHNSON CONTROLS METASYS NETWORK RISER DIAGRAM

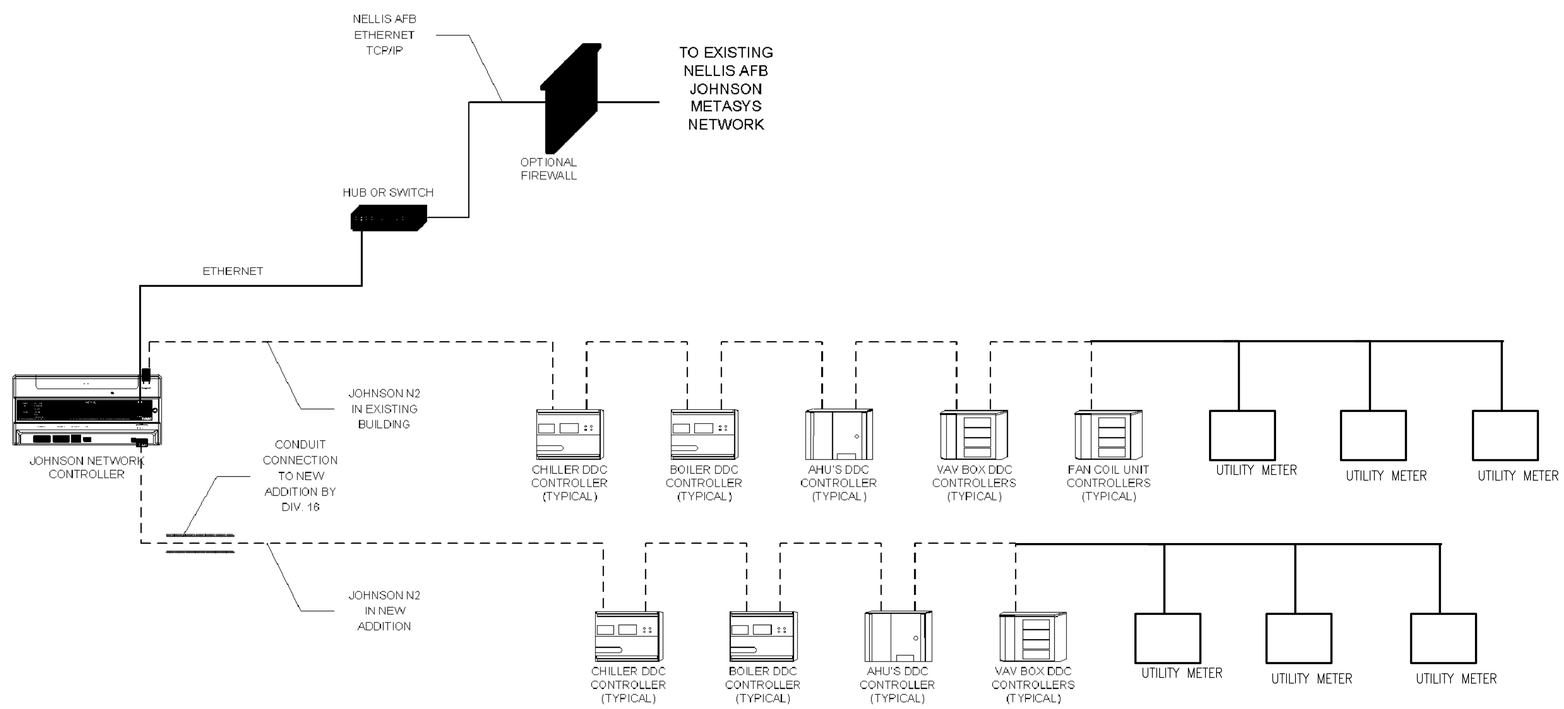

REVISION INFORMATION	
NUMBER	number
DATE	08/11/05
TIME	05:05 AM
extra	
FILE NAME	NET Flow.vsd

IN CONSIDERATION OF THE RECEIPT OF THIS DOCUMENT, THE RECIPIENT AGREES NOT TO REPRODUCE, COPY, USE OR TRANSMIT THIS DOCUMENT AND/OR THE INFORMATION THERIN CONTAINED, IN WHOLE OR IN PART, OR TO SUFFER SUCH ACTION BY OTHERS, FOR ANY PURPOSE, EXCEPT WITH THE WRITTEN PERMISSION OF JOHNSON CONTROLS, INC. AND FURTHER AGREES TO SURRENDER SAME TO JOHNSON CONTROLS, INC. UPON DEMAND.

COPYRIGHT JOHNSON CONTROLS, INC. 2005

Drawing Title
METASYS NETWORK RISER DIAGRAM

Project Title
Nellis AFB
Building 282
Addition and Renovation
Las Vegas, NV

REFERENCE DRAWING	NO.	REVISION-LOCATION	ECN	DATE	BY

Sales Engineer	Project Manager	Application Engineer	DRAWN		APPROVED	
AR	RQ	RQ	BY AR	DATE 08/10/05	BY	DATE

JOHNSON CONTROLS
Systems & Services Division

Branch Information

CONTRACT NUMBER

DRAWING NUMBER
NET-1-1

9002

US Army Corps of Engineers
Sacramento District

Symbol	Description	Date	Approved

Designed by: A.M.
Dwn by: A.M.
Reviewed by: S.B.
Submitted by: J.V. Sandoval, Chief Const. Mech/Elec. Sec.
Date: 10/21/05
Spec No.: 1304
Design file no: 229-25-539
Drawing Code:
Rev:
File name:
Plot date:
Dwg scale: AS_NOTED

DEPARTMENT OF THE ARMY
CORPS OF ENGINEERS
SACRAMENTO, CALIFORNIA

SACRAMENTO DISTRICT
IN-HOUSE DESIGN
1325 "J" STREET
SACRAMENTO, CA 95814-2922

NEVADA
NELLIS AFB
F/A-22 ADD/ALTER WEAPONS SCHOOL
NET WORK SYSTEM

Sheet reference number:
M-825

Border Revised 08/30/04 CDSPIT02.DWG

LIGHTING

- A — LIGHTING FIXTURE IDENTIFICATION SYMBOL; SEE LIGHTING FIXTURE SCHEDULE ON SHEET EXX
- INCANDESCENT, FLUORESCENT, OR HID FIXTURE
- COMPACT FLUORESCENT WALL MOUNTED DOWN LIGHT
- COMPACT FLUORESCENT FIXTURE WITH SELF-CONTAIN EMERGENCY BATTERY SUPPLY
- EXIT LIGHT, TOP MOUNTED, DARKENED AREA REPRESENT LETTERED FACE
- EXIT LIGHT, WALL MOUNTED, DARKENED AREA REPRESENT LETTERED FACE
- EXIT LIGHT, TOP MOUNTED, ARROW INDICATES DIRECTION OF EGRESS
- EXIT LIGHT, WALL MOUNTED, ARROW INDICATES DIRECTION OF EGRESS
- B — BLANKED OUTLET
- J — JUNCTION BOX
- PC — PHOTO-CELL CONTROL
- EMERGENCY LIGHT SET
- FLUORESCENT FIXTURE, RECESSED
- FLUORESCENT FIXTURE, SURFACE OR PENDANT MOUNT
- FLUORESCENT FIXTURE WITH SELF-CONTAINED EMERGENCY BATTERY SUPPLY
- a b — FLUORESCENT FIXTURE WITH DUAL LEVEL SWITCHING. SWITCH Sa CONTROLS OUTBOARD LAMPS AND SWITCH Sb CONTROLS INBOARD LAMP(S).
- HID FLOODLIGHT

SWITCHES (+48" UNLESS NOTED)

- S — SINGLE POLE SWITCH
- S_2 — DOUBLE POLE SWITCH
- S_3 — THREE-WAY SWITCH
- S_4 — FOUR-WAY SWITCH
- S_a — SWITCH CONTROLS FIXTURE MARKED WITH SUBSCRIPT INDICATED
- S_k — KEY OPERATED SWITCH
- S_p — SWITCH WITH PILOT LAMP
- D — DIMMER SWITCH
- D_3 — THREE-WAY DIMMER SWITCH
- $S\ S$ — TWO SINGLE POLE SWITCHES CONNECTED FOR MULTI-ILLUMINATION LEVEL SWITCHING
- C — PROJECTION SCREEN UP/DOWM CONTROL

RECEPTACLES (+15" UNLESS NOTED)

- SINGLE RECEPTACLE, NEMA 5-15R, GROUNDING TYPE
- DUPLEX RECEPTACLE, NEMA 5-15R, GROUNDING TYPE
- WP — DUPLEX RECEPTACLE, NEMA 5-15R, GROUNDING TYPE, WP
- GFI — DUPLEX RECEPTACLE, NEMA 5-15R, GROUNDING TYPE, GFI
- IG — DUPLEX RECEPTACLE, NEMA 5-15R, GROUNDING TYPE, ISOLATED GROUND
- C — DUPLEX RECEPTACLE, NEMA 5-15R, GROUNDING TYPE, RECESS MOUNTED IN THE CEILING
- DUPLEX RECEPTACLE, NEMA 5-20R, GROUNDING TYPE
- SINGLE RECEPTACLE, NEMA 5-20R, GROUNDING TYPE FOR SIMULATOR
- SINGLE RECEPTACLE, NEMA L5-30R GROUNDING TYPE FOR SIMULATOR
- QUAD-RECEPTACLE (DOUBLE DUPLEX), NEMA 5-15R, GROUNDING TYPE
- DUPLEX RECEPTACLE, NEMA 5-15R, GROUNDING TYPE, RECESS MOUNTED IN THE FLOOR
- QUAD-RECEPTACLE (DOUBLE DUPLEX), NEMA 5-15R, GROUNDING TYPE, RECESS MOUNTED IN THE FLOOR

PANELBOARDS AND POWER EQUIPMENT

- FLUSH MOUNTED PANELBOARD AND CABINET
- SURFACE MOUNTED PANELBOARD AND CABINET
- SWITCHBOARD OR DISTRIBUTION PANELBOARD (AS NOTED)
- MOTOR CONTROLLER
- DISCONNECT SWITCH
- COMBINATION CONTROLLER AND DISCONNECT SWITCH
- SM — MANUAL MOTOR STARTER
- ½ — MOTOR OUTLET, HORSEPOWER AS INDICATED
- M 2 — MOTOR OUTLET, HORSEPOWER AS INDICATED
- PUSHBUTTON STATION
- PUSHBUTTON STATION
- 1 — EQUIPMENT IDENTIFICATION SYMBOL; SEE EQUIPMENT SCHEDULE ON SHEET EXX
- J CP — CEILING RECESSED JUNCTION BOX FOR MOTORIZED PROJECTION SCREEN

CIRCUITING

- WIRING CONCEALED IN CEILING OR WALL
- WIRING CONCEALED IN FLOOR
- WIRING EXPOSED
- CROSSLINES INDICATE NUMBER OF #12 CONDUCTORS. EQUIPMENT GROUNDING CONDUCTOR (WHERE REQUIRED) IS NOT SHOWN. NO CROSSLINES INDICATES 2-#12, 1/2" CONDUIT; OTHER CONDUCTOR AND CONDUIT SIZES AS INDICATED.
- CROSSLINES INDICATE NUMBER OF #12 CONDUCTORS IN CONDUIT. NO CROSSLINES OR OTHER IDENTI-FICATION INDICATES 2-#12, 1/2" CONDUIT. OTHER CONDUCTOR AND CONDUIT SIZES AS INDICATED ON PLANS OR IN EQUIPMENT SCHEDULE.
- A-1,3 — BRANCH CIRCUIT HOMERUN TO PANELBOARD; NUMBER OF ARROWS INDICATE NUMBER OF CIRCUITS. LETTER AND NUMBER NOTATION IDENTIFIES PANEL AND CIRCUIT NUMBER(S).
- CO — EMPTY RACEWAY WITH PULLWIRE
- WIRING TURNED UP
- WIRING TURNED DOWN
- FLEXIBLE CONDUIT
- E — WIRING ON EMERGENCY POWER CIRCUIT

MISCELLANEOUS

- 18" — UNDERFLOOR TRENCH DUCT, WIDTH AS INDICATED
- UNDERFLOOR CELLULAR RACEWAY
- UNDERFLOOR HEADER DUCT
- CABLE TRAY, LADDER TYPE
- J — MULTI-OUTLET ASSEMBLY, LENGTH AND SPACING AS INDICATED
- T P S — UNDERFLOOR DUCT AND JUNCTION BOX. NUMBER OF PARALLEL DUCTS AS INDICATED: P=POWER, T=TELEPHONE, S=SIGNAL

FIRE ALARM SYSTEM

- FCP — FIRE ALARM CONTROL PANEL
- MNS — MASS NOTIFICATION SYSTEM PANEL
- P — MANUAL PULL STATION (+48")
- BELL (+48")
- S — SPEAKER WITH ALERT AMBER STROBE LIGHT AS ONE ASSEMBLY (+48")
- HEAT DETECTOR FOR ELEVATOR POWER
- P — SMOKE DETECTOR PHOTOELECTRIC
- FSA — FIRE SYSTEM ANNUNCIATOR
- WATER FLOW SWITCH
- D — DUCT SMOKE DETECTOR
- OSY — OS&Y VALVE TAMPER SWITCH
- R — RADIO TRANSCEIVER
- FIRE ALARM RADIO TRANSMITTER ANTENNA & WALL SUPPORT
- FIRE ALARM CLEAR STROBE LIGHT (+84")
- A — ALERT AMBER STROBE LIGHT (+84")
- PIV — POST-INDICATOR VALVE
- H — EXISTING HORN WITH LIGHT TO REMOVE
- F — EXISTING MANUAL PULL STATION TO REMOVE

COMMUNICATIONS SYSTEMS

- S — SIPRNET OUTLET (+36" UON) W/TWO ST TYPE CONNECTORS
- SL — SCI-LAN OUTLET (+36" UON) W/TWO ST TYPE CONNECTORS
- SP — SPAWN OUTLET (+36" UON) W/TWO ST TYPE CONNECTORS
- JW — JWICS OUTLET (+36" UON) W/TWO ST TYPE CONNECTORS
- ISS — ISS OUTLET (+36" UON) W/TWO ST TYPE CONNECTORS
- I — DUAL ST CONNECTORS OUTLET +18"
- NIPRNET/VOICE OUTLET (+15" UON) W/TWO CAT. 6E RJ45, 8 PIN MODULAR JACKS
- RECESSED FLOOR NIPRNET/VOICE OUTLET W/ TWO CAT. 6E RJ45, 8 PIN MODULAR JACKS
- WTC — WALL MOUNTED CABINET
- TTB — TELEPHONE TERMINAL BACKBOARD
- LAN — LOCAL AREA NETWORK
- S — SPEAKER
- CATV — RECESS CEILING MOUNTED CABLE TV OUTLET
- CATV W — RECESS WALL MOUNTED CABLE TV OUTLET (+15" UON)
- A — PA AMPLIFIER AND POWER SUPPLY
- M — PA MICROPHONE
- PUBLIC ADDRESS SYSTEM OUTLET
- IC MASTER STATION

EXTERIOR COMMUNICATIONS

- UHF ANTENNA SUPPORT, WALL MOUNTING, AND CONDUIT THROUGH WALL
- SATCOM ANTENNA SUPPORT, WALL MOUNTING, AND CONDUIT THROUGH WALL

SIGNALING SYSTEM

- BUZZER (+48")
- BELL (+84")

ONE-LINE DIAGRAM

- TRANSFORMER
- FUSE
- INSULATED CASE CIRCUIT BREAKER
- MOLDED CASE CIRCUIT BREAKER
- Ka — KEY INTERLOCK
- 3 — CURRENT TRANSFORMER, NUMBER AS INDICATED
- DISCONNECT SWITCH
- SURGE ARRESTER
- A — AMMETER
- V — VOLTMETER
- WH — WATTHOUR DEMAND METER
- 200 AT / 225 AF — CIRCUIT BREAKER TRIP SETTING / CIRCUIT BREAKER FRAME SIZE

LIGHTNING PROTECTION

- AIR TERMINAL
- GROUND TERMINAL
- D — DOWN CONDUCTOR
- G — COUNTERPOISE
- ROOF CONDUCTOR
- BONDING PLATE

EXTERIOR (NEW)

- UNDERGROUND DUCT LINE
- P — PRIMARY CIRCUIT
- E — SECONDARY CIRCUIT
- T — COMMUNICATION LINE
- TRANSFORMER, PAD MOUNTED
- C — COMMUNICATION MANHOLE
- M — ELECTRICAL MANHOLE
- PS — PADMOUNTED SWITCHGEAR
- CH — COMMUNICATION HANDHOLE

EXTERIOR (EXISTING)

- C — COMMUNICATION MANHOLE
- M — ELECTRICAL MANHOLE
- S M — ELECTRICAL MANHOLE WITH SWITCH
- TRANSFORMER, PAD MOUNTED
- H C — COMMUNICATION HANDHOLE
- EP — PRIMARY CIRCUIT UNDERGROUND
- ET — COMMUNICATION LINE UNDERGROUND
- EC — COMMUNICATION LINE EXPOSED
- POLE
- STREET LIGHT

ABBREVIATIONS

A	AMPERE
ACSR	ALUMINUM CONDUCTOR, STEEL REINFORCED
AFF	ABOVE FINISHED FLOOR
AIC	AMPERES INTERRUPTING CAPACITY
APPROX	APPROXIMATELY
BC	BARE COPPER
C	CONDUIT
CB	CIRCUIT BREAKER
CKT	CIRCUIT
CO	CONDUIT ONLY
CONC	CONCRETE
CT	CURRENT TRANSFORMER
CU	COPPER
DTC	DATA TERMINAL CABINET
(E)	EXISTING
EMCS	EMERGENCY MONITORING AND CONTROL SYSTEM
EPS	EMERGENCY POWER SUPPLY
FA	FIRE ALARM
FLR	FLOOR
FT	FEET
GF/CI	GOVERNMENT FURNISHED, CONTRACTOR INSTALLED
GFI	GROUND FAULT CIRCUIT-INTERRUPTER
GND or G	GROUND
HID	HIGH INTENSITY DISCHARGE
HPF	HIGH POWER FACTOR
HPS	HIGH PRESSURE SODIUM VAPOR
IC	INTERCOM
IG	ISOLATED GROUND
IN	INCHES
INCAND	INCANDESCENT
I/P	INPUT
KVA	KILOVOLTAMPERE
KWH	KILOWATTHOUR
LAN	LOCAL AREA NETWORK
LPS	LOW PRESSURE SODIUM
MAX	MAXIMUM
MCC	MOTOR CONTROL CENTER
MDP	MAIN DISTRIBUTION PANELBOARD
MH	METAL HALIDE
MIN	MINIMUM
MOV	METAL OXIDE VARISTOR
MV	MERCURY VAPOR
(N)	NEW
N/A	NON-AUTOMATIC
NIC	NOT IN CONTRACT
O.C.	ON CENTER
O.H.	OVERHEAD
O/P	OUTPUT
PA	PUBLIC ADDRESS
PT	POTENTIAL TRANSFORMER
RM	ROOM
RSC	RIGID STEEL CONDUIT
TC	TERMINAL CABINET
TTB	TELEPHONE TERMINAL BOARD
TYP	TYPICAL
UON	UNLESS OTHERWISE NOTED
V	VOLT
W	WATT
W/	WITH
WP	WEATHERPROOF
XFMR	TRANSFORMER
XP	EXPLOSIONPROOF
+12"	MOUNTING HEIGHT ABOVE FINISHED FLOOR OR GRADE

US Army Corps of Engineers
Sacramento District

Symbol	Description	Date	Approved

Designed by: F. LUM
Dwn by: J. FRESCAS
Reviewed by: J. PARRISH
Submitted by: Section Chief
Date: 10/21/05
Spec No.: 1304
Design File no: 229-25-539
Drawing Code:
File name: N3NE-001
Plot date:
Dwg scale: AS_NOTED

DEPARTMENT OF THE ARMY
CORPS OF ENGINEERS
SACRAMENTO, CALIFORNIA

SACRAMENTO DISTRICT
IN-HOUSE DESIGN
1325 J STREET
SACRAMENTO, CA 95814-2922

NEVADA
NELLIS AFB
F/A-22 ADD/ALTER WEAPONS SCHOOL

ELECTRICAL LEGEND

Sheet reference number:
E-001

UPDATE

Border Revised 03/01/04, CDSHEET2.DWG

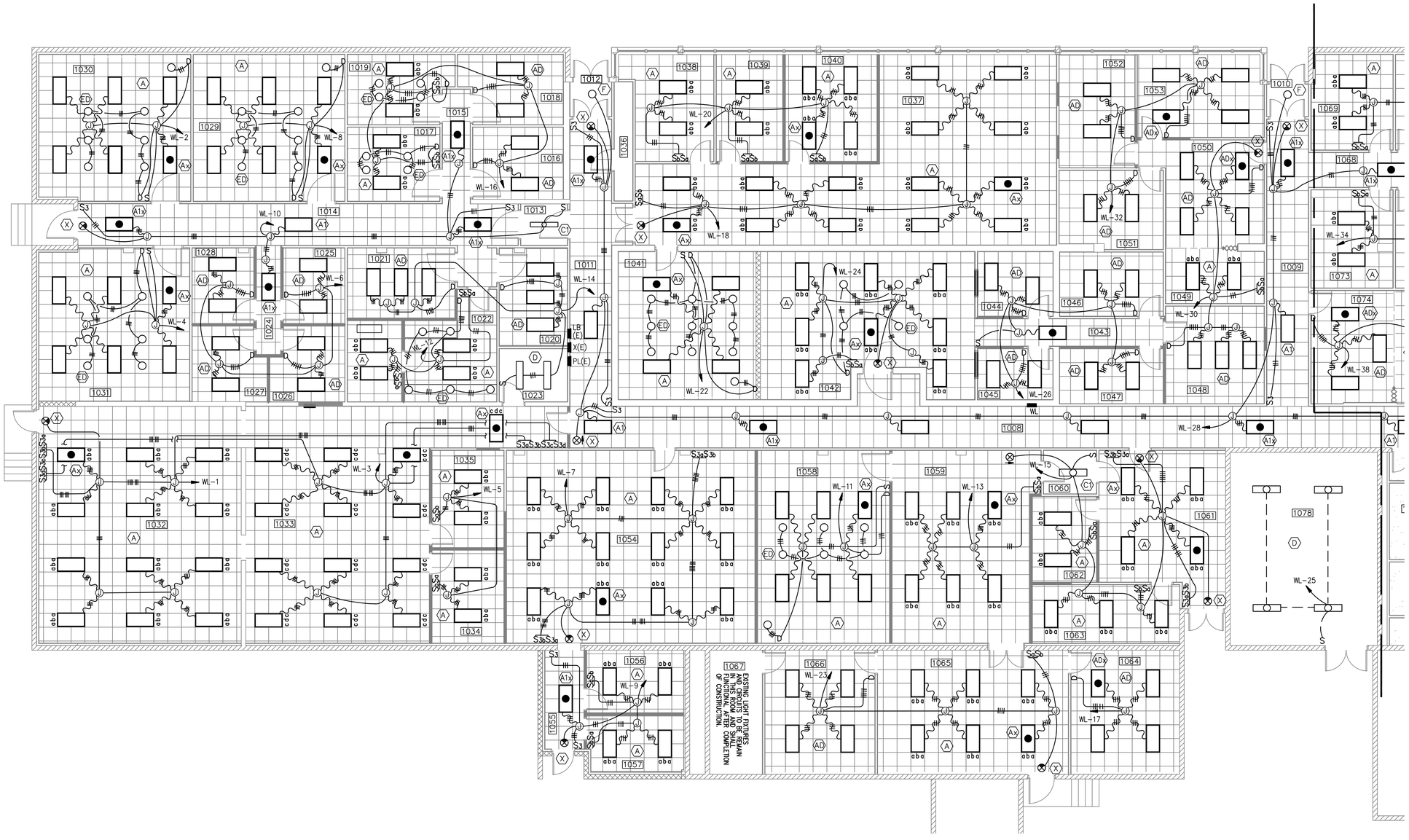

LIGHTING FLOOR PLAN – BUILDING 282 – AREA A

SCALE: 1/8" = 1'-0

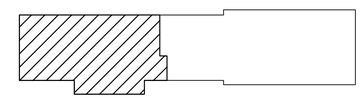

KEY PLAN

NTS

GRAPHIC SCALE

1/8"=1'-0" 0' 2' 4' 8' 16' 24'

REFERENCE

NORTH

US Army Corps of Engineers
Sacramento District

Symbol	Description	Date	Approved

Rev.

Date: 10/21/05
Design file no: 229-25-539
Drawing Code:
File name: N3SE-1120xx.dwg
Plot date:
Dwg scale: AS_NOTED

Designed by: F. LUM
Dwn by: J. FRESCAS
Spec No.: 1304
Reviewed by: J. PARRISH
Approved by: Maj/ Thomas E. Nielsen
Chief, Mech./Elec. Des. Sec.

DEPARTMENT OF THE ARMY
CORPS OF ENGINEERS
SACRAMENTO, CALIFORNIA

SACRAMENTO DISTRICT
IN-HOUSE DESIGN
1325 J STREET
SACRAMENTO, CA 95814-2922

NEVADA

NELLIS AFB

F/A-22 ADD/ALTER WEAPONS SCHOOL

LIGHTING FLOOR PLAN
BUILDING 282
FLOOR PLAN AREA A

Sheet reference number:
E-101

Border Revised 03/01/04, CDESIGN02.DWG

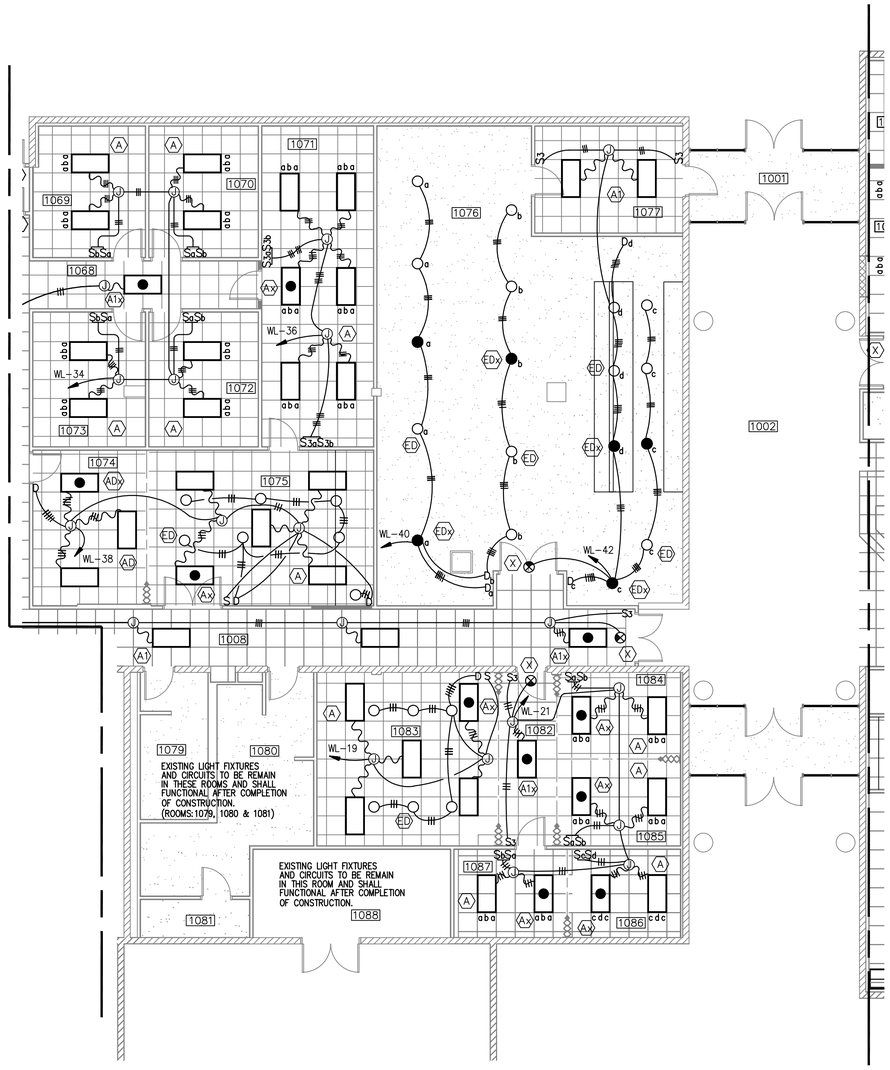

LIGHTING FLOOR PLAN – BUILDING 282 – AREA B

SCALE: 1/8" = 1'-0

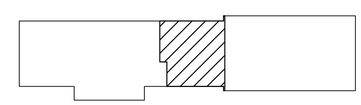

KEY PLAN

NTS

GRAPHIC SCALE

1/8"=1'-0" 0' 2' 4' 8' 16' 24'

REFERENCE

NORTH

US Army Corps of Engineers
Sacramento District

Symbol	Description	Date	Approved

Rev.

Date: 10/21/05
Design file no: 229-25-539
Drawing Code:
File name: N3SE-10Txxx.dwg
Plot date:
Dwg scale: AS_NOTED

Designed by: F. LUM
Dwn by: J. FRESCAS
Spec No.: 1304
Reviewed by: FJ. PARRISH
Submitted by: Jay Thompson E. Nissen
Chief, Work/Proc. Des. Sec.

DEPARTMENT OF THE ARMY
CORPS OF ENGINEERS
SACRAMENTO, CALIFORNIA

SACRAMENTO DISTRICT
IN-HOUSE DESIGN
1325 J STREET
SACRAMENTO, CA 95814-2922

NEVADA

NELLIS AFB

F/A-22 ADD/ALTER WEAPONS SCHOOL

LIGHTING FLOOR PLAN
BUILDING 282
FLOOR PLAN AREA B

Sheet reference number:
E-102

Border Revised 03/01/04, CSE3470.2.DWG

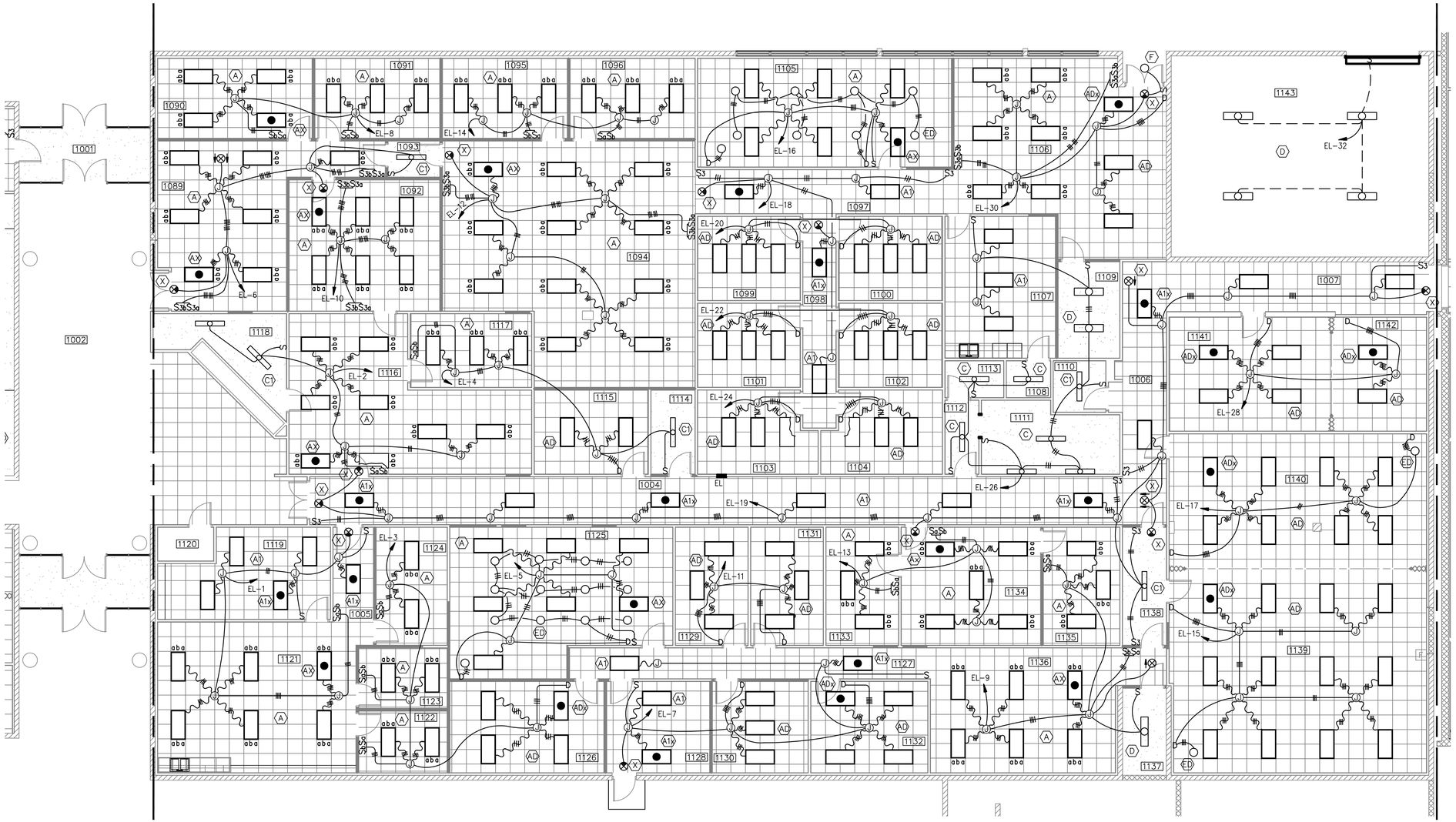

LIGHTING FLOOR PLAN – BUILDING 282 – AREA C

SCALE: 1/8" = 1'-0

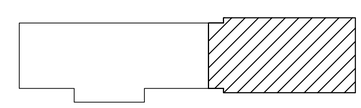

KEY PLAN

NTS

GRAPHIC SCALE

1/8"=1'-0" 0' 2' 4' 8' 16' 24'

REFERENCE

NORTH

US Army Corps of Engineers
Sacramento District

Symbol	Description	Date	Approved

Designed by: F. LUM
Dwn by: J. FRESCAS
Reviewed by: LP-ARRIGH
Submitted by: A/E Thomas E. Nissen Chief, Mech./Elec. Des. Sec.
Date: 10/21/05
Spec No.: 1304
Design file no: 229-25-539
Drawing Code:
File name: N36E-102xx.dwg
Plot date:
Dwg scale: AS_NOTED
Rev.

DEPARTMENT OF THE ARMY
CORPS OF ENGINEERS
SACRAMENTO, CALIFORNIA

SACRAMENTO DISTRICT
IN-HOUSE DESIGN
1325 J STREET
SACRAMENTO, CA 95814-2922

NEVADA

NELLIS AFB

F/A-22 ADD/ALTER WEAPONS SCHOOL

LIGHTING FLOOR PLAN
BUILDING 282
FLOOR PLAN AREA C

Sheet reference number:

E-103

Border Revised 03/01/04, CEK3N102.DWG