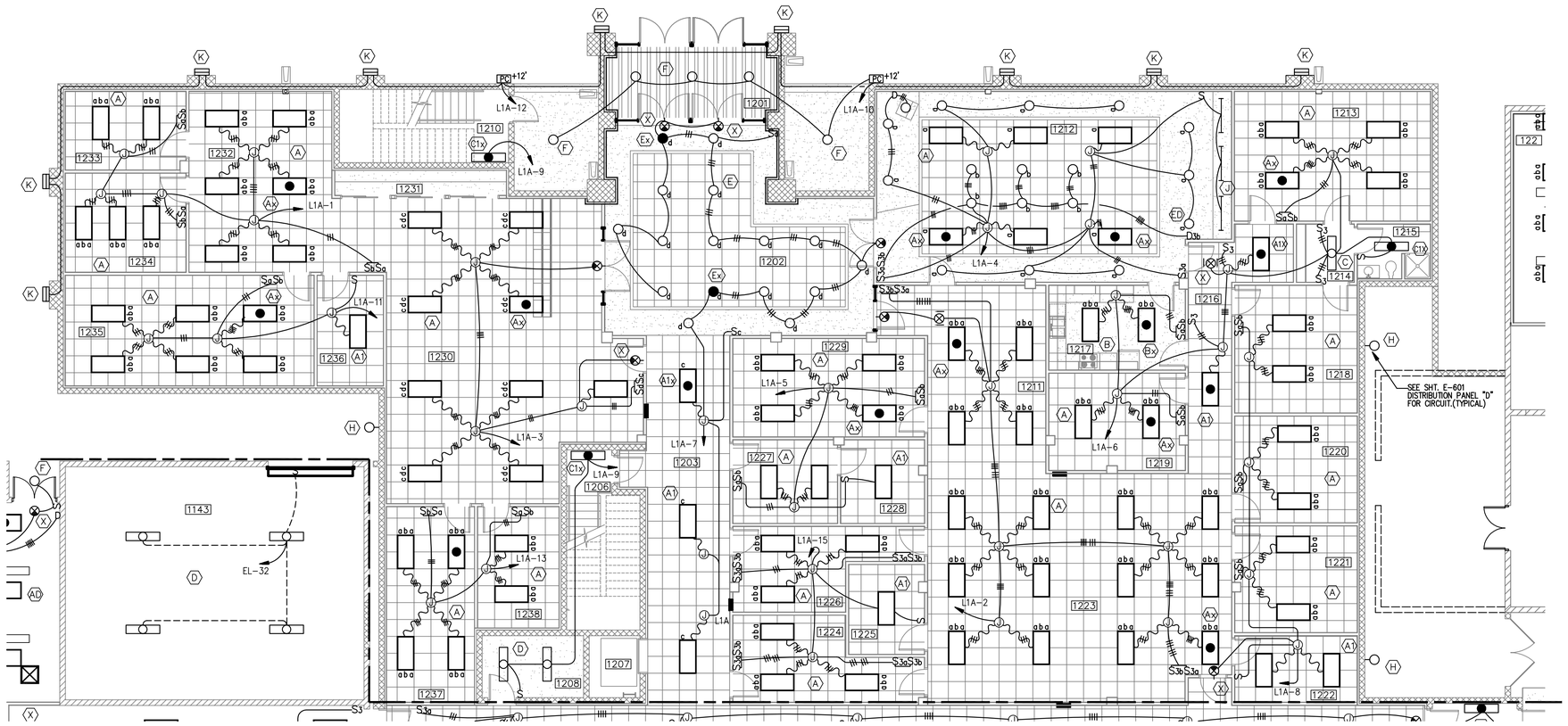

LIGHTING FLOOR PLAN – BUILDING 282 ADDITION – FIRST FLOOR AREA A

SCALE: 1/8" = 1'-0

KEY PLAN

NTS

GRAPHIC SCALE

1/8"=1'-0" 0' 2' 4' 8' 16' 24'

REFERENCE

NORTH

US Army Corps of Engineers
Sacramento District

Symbol	Description	Date	Approved

Designed by: F. LUM
Dwn by: J. FRESCAS
Spec No.: 1304
Reviewed by: J. PARRISH
Submitted by: Guy Thomas E. Nissen
Chief, Mech./Elec. Des. Sec.
Date: 10/21/05
Rev.
Design file no: 229-25-539
Drawing Code:
File name: N35E-150xxx.dwg
Plot date:
Dwg scale: AS_NOTED

DEPARTMENT OF THE ARMY
CORPS OF ENGINEERS
SACRAMENTO, CALIFORNIA

SACRAMENTO DISTRICT
IN-HOUSE DESIGN
1325 J STREET
SACRAMENTO, CA 95814-2922

NEVADA

NELLIS AFB

F/A-22 ADD/ALTER WEAPONS SCHOOL

LIGHTING FLOOR PLAN
FIRST FLOOR AREA A
BUILDING 282 ADDITION

Sheet reference number:
E-104

Border Revised 03/01/04, CDESOTO2.DWG

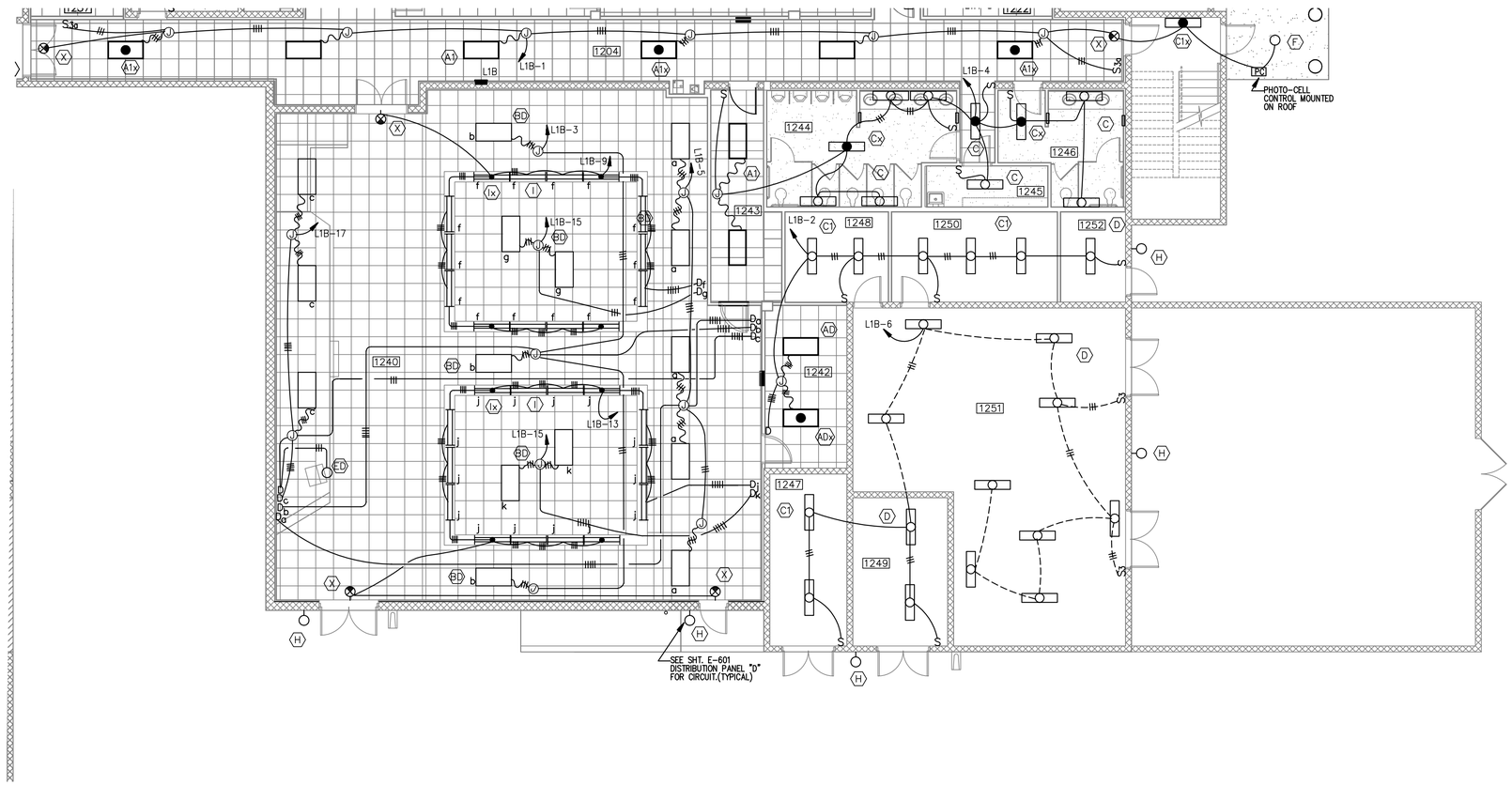

LIGHTING FLOOR PLAN – BUILDING 282 ADDITION – FIRST FLOOR AREA B

SCALE: 1/8" = 1'-0

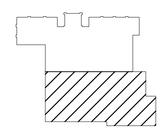

KEY PLAN

NTS

GRAPHIC SCALE

1/8"=1'-0" 0' 2' 4' 8' 16' 24'

REFERENCE

NORTH

US Army Corps of Engineers
Sacramento District

Symbol	Description	Date	Approved

Designed by: F. LUM
Dwn by: J. FRESCAS
Reviewed by: J. PARRISH
Sup'v Engr: Thomas E. Nissen, Chief, Mech./Elec. Des. Sec.
Date: 10/21/05
Spec No.: 1304
Rev.
Design file no: 229-25-539
Drawing Code:
File name: N35E-105xxx.dwg
Plot date:
Dwg scale: AS_NOTED

DEPARTMENT OF THE ARMY
CORPS OF ENGINEERS
SACRAMENTO, CALIFORNIA

SACRAMENTO DISTRICT
IN-HOUSE DESIGN
1325 J STREET
SACRAMENTO, CA 95814-2922

NEVADA

NELLIS AFB

F/A-22 ADD/ALTER WEAPONS SCHOOL

LIGHTING FLOOR PLAN
FIRST FLOOR AREA B
BUILDING 282 ADDITION

Sheet reference number:

E-105

Border Revised 03/01/04, CCE3/01/2.DWG

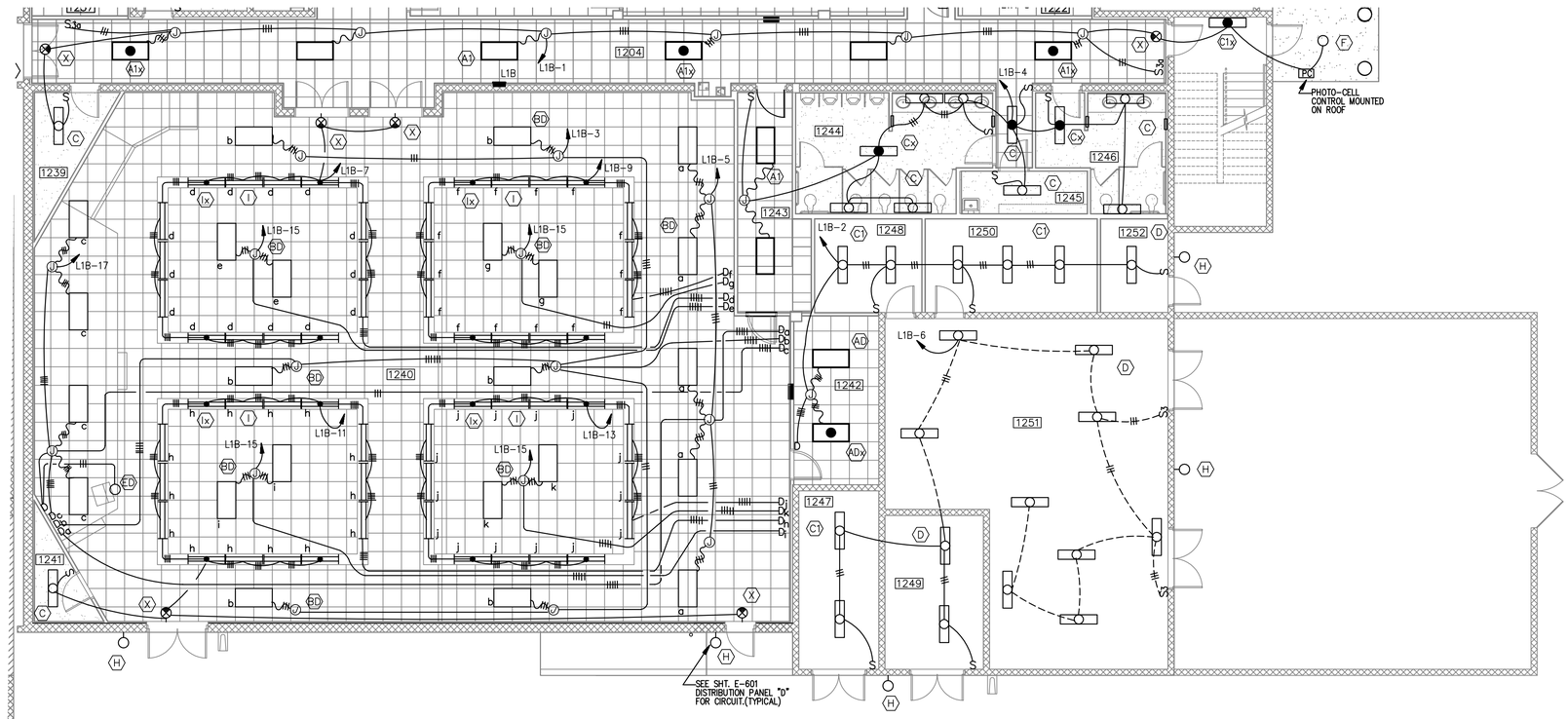

THIS SHEET IS INCLUDED IN BID OPTION 1

LIGHTING FLOOR PLAN – BUILDING 282 ADDITION – FIRST FLOOR AREA B

SCALE: 1/8" = 1'-0

KEY PLAN

NTS

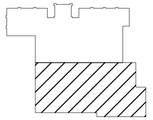

GRAPHIC SCALE

1/8"=1'-0" 0' 2' 4' 8' 16' 24'

REFERENCE

NORTH

US Army Corps of Engineers
Sacramento District

Symbol	Description	Date	Approved

Designed by: F. LUM
Dwn by: J. FRESCAS
Spec No.: 1304
Reviewed by: J. PARRISH
Sup/Thomas E. Nissen
Chief, Mech./Elec. Des. Sec.
Date: 10/21/05
Design file no: 229-25-539
Drawing Code:
File name: N3SE-105Axxx.dwg
Plot date:
Dwg scale: AS_NOTED
Rev.

DEPARTMENT OF THE ARMY
CORPS OF ENGINEERS
SACRAMENTO, CALIFORNIA

SACRAMENTO DISTRICT
IN-HOUSE DESIGN
1325 J STREET
SACRAMENTO, CA 95814-2922

NEVADA

NELLIS AFB

F/A-22 ADD/ALTER WEAPONS SCHOOL

LIGHTING FLOOR PLAN
FIRST FLOOR AREA B
BUILDING 282 ADDITION

Sheet reference number:
E-105A

Border Revised 03/01/04, CCESI01.2.DWG

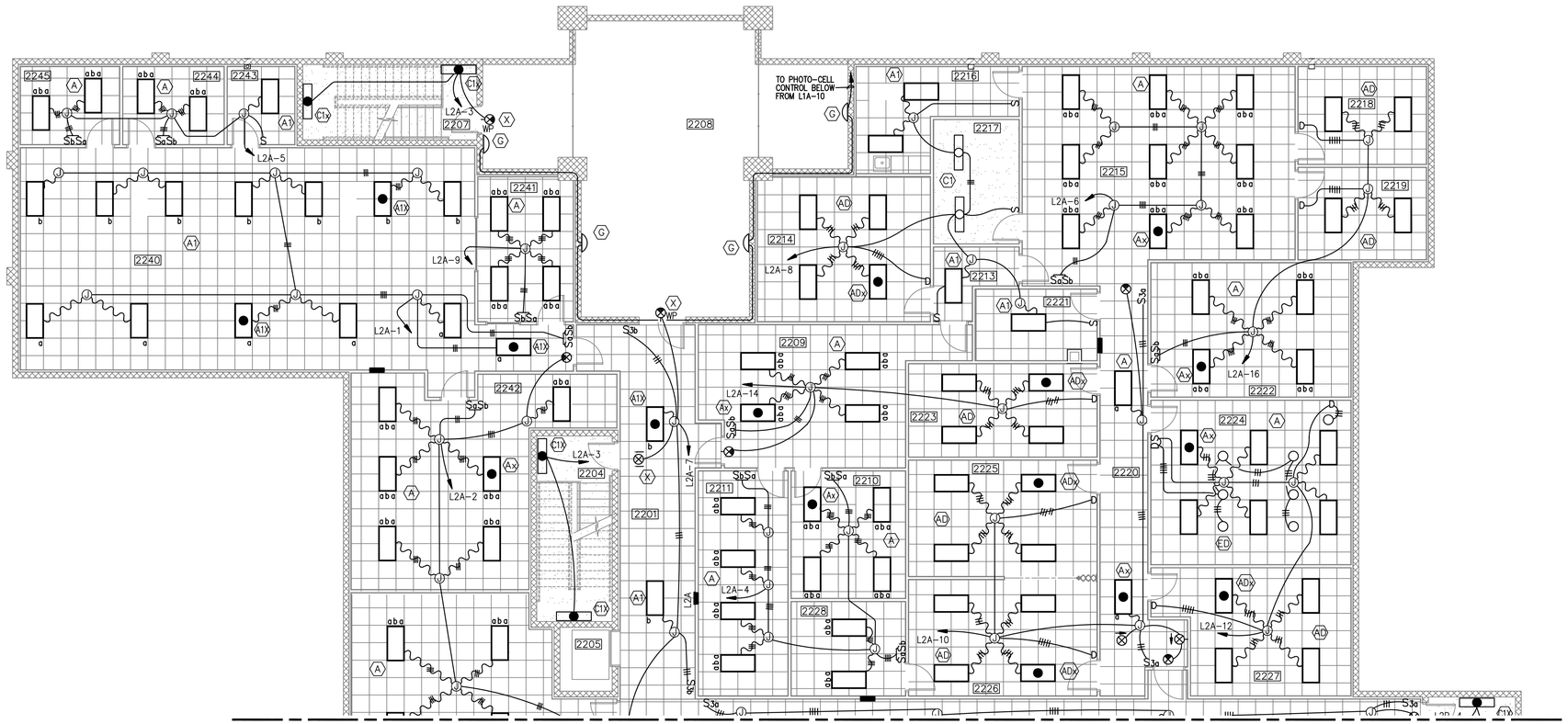

LIGHTING FLOOR PLAN – BUILDING 282 ADDITION – SECOND FLOOR AREA A

SCALE: 1/8" = 1'-0

KEY PLAN

NTS

GRAPHIC SCALE

1/8"=1'-0" 0' 2' 4' 8' 16' 24'

REFERENCE

NORTH

US Army Corps of Engineers
Sacramento District

Symbol	Description	Date	Approved

Designed by: F. LUM
Dwn by: J. FRESCAS
Reviewed by: J. PARRISH
Submitted by: Chief, Mech./Elec. Des. Sec.
Date: 10/21/05
Spec No.: 1304
Design file no: 229-25-539
Drawing Code:
File name: N35E-105xxx.dwg
Plot date:
Dwg scale: AS_NOTED
Rev.

DEPARTMENT OF THE ARMY
CORPS OF ENGINEERS
SACRAMENTO, CALIFORNIA

SACRAMENTO DISTRICT
IN-HOUSE DESIGN
1325 J STREET
SACRAMENTO, CA 95814-2922

NEVADA

NELLIS AFB

F/A-22 ADD/ALTER WEAPONS SCHOOL

LIGHTING FLOOR PLAN
SECOND FLOOR AREA A
BUILDING 282 ADDITION

Sheet reference number:
E-106

Border Revised 03/11/04, CCE3/1102.DWG

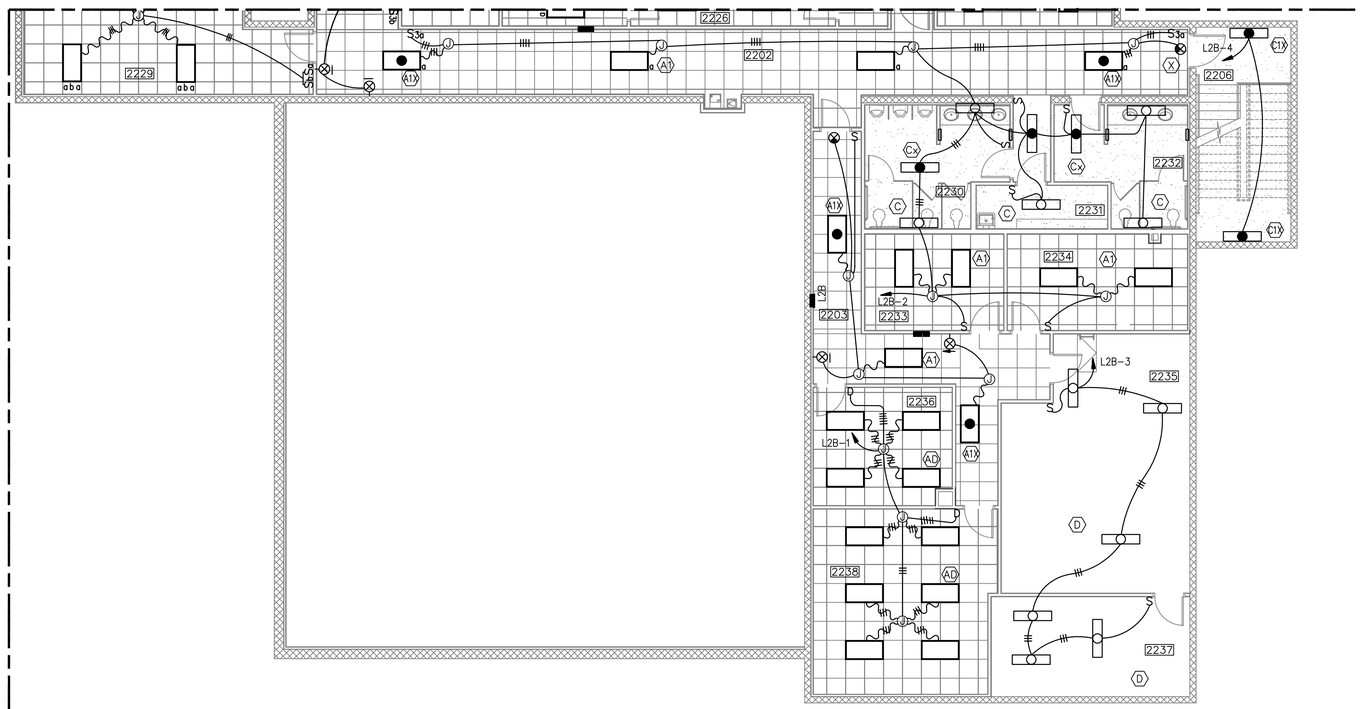

LIGHTING FLOOR PLAN – BUILDING 282 ADDITION – SECOND FLOOR AREA B

SCALE: 1/8" = 1'-0

KEY PLAN

NTS

GRAPHIC SCALE

1/8"=1'-0" 0' 2' 4' 8' 16' 24'

REFERENCE

NORTH

US Army Corps of Engineers
Sacramento District

Symbol	Description	Date	Approved

Designed by: F. LUM
Dwn by: J. FRESCAS
Reviewed by: J. PARRISH
Submitted by: Ray Thomas E. Nissen
Chief, Mech./Elec. Des. Sec.

Date: 10/21/05
Rev.
Spec No.: 1304
Design file no: 229-25-539
Drawing Code:
File name: N36E-107xxx.dwg
Plot date:
Dwg scale: AS_NOTED

DEPARTMENT OF THE ARMY
CORPS OF ENGINEERS
SACRAMENTO, CALIFORNIA

SACRAMENTO DISTRICT
IN-HOUSE DESIGN
1325 J STREET
SACRAMENTO, CA 95814-2922

NEVADA

NELLIS AFB

F/A-22 ADD/ALTER WEAPONS SCHOOL

LIGHTING FLOOR PLAN
SECOND FLOOR AREA B
BUILDING 282 ADDITION

Sheet reference number:

E-107

Border Revised 03/01/04, 02E3012.DWG

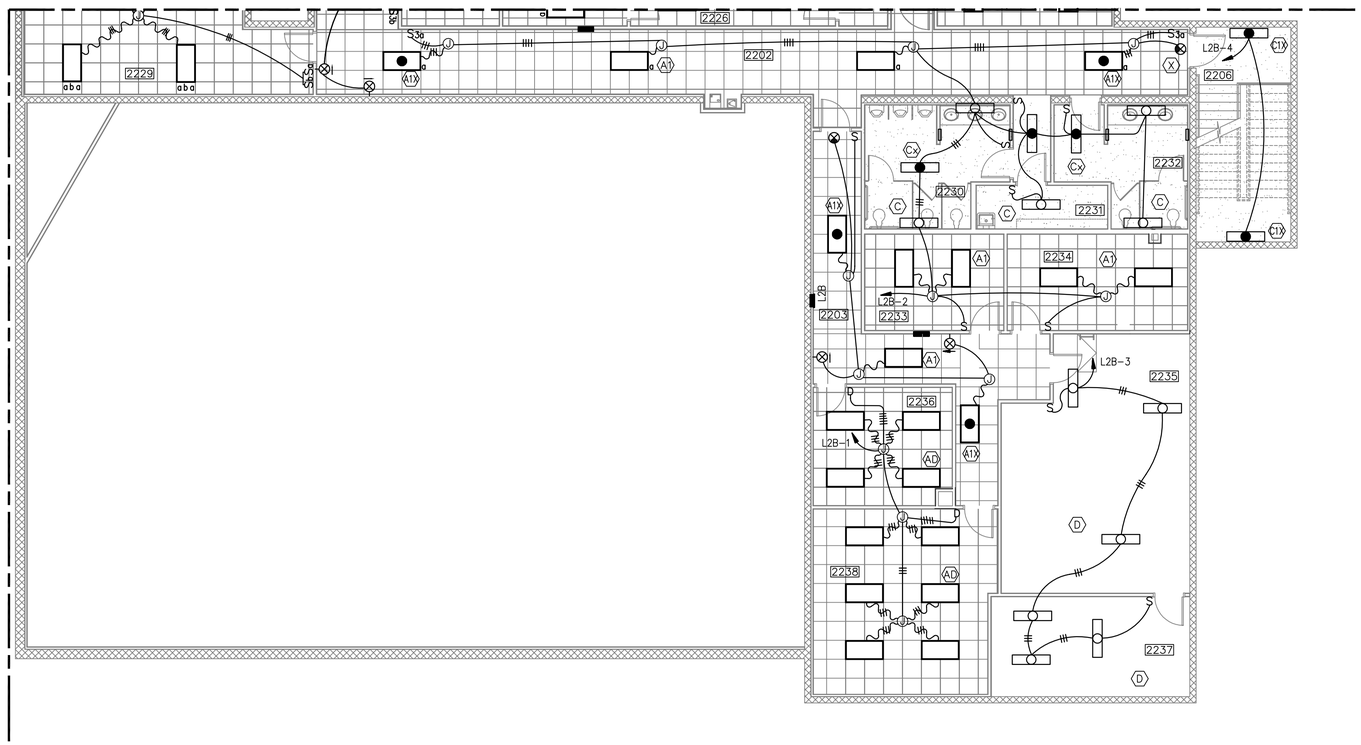

THIS SHEET IS INCLUDED IN BID OPTION 1

LIGHTING FLOOR PLAN – BUILDING 282 ADDITION – SECOND FLOOR AREA B

SCALE: 1/8" = 1'-0

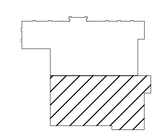

KEY PLAN

NTS

GRAPHIC SCALE

1/8"=1'-0" 0' 2' 4' 8' 16' 24'

REFERENCE

NORTH

US Army Corps of Engineers
Sacramento District

Symbol	Description	Date	Approved

Designed by: F. LUM
Dwn by: J. FRESCAS
Reviewed by: J. PARRISH
Submitted by: Ray Thomas E. Nissen
Chief, Mech./Elec. Des. Sec.

Date: 10/21/05
Spec No.: 1304
Design file no: 229-25-539
Drawing Code:
File name: N3SE-107Axxx.dwg
Plot date:
Dwg scale: AS_NOTED

Rev.

DEPARTMENT OF THE ARMY
CORPS OF ENGINEERS
SACRAMENTO, CALIFORNIA

SACRAMENTO DISTRICT
IN-HOUSE DESIGN
1325 J STREET
SACRAMENTO, CA 95814-2922

NEVADA

NELLIS AFB

F/A-22 ADD/ALTER WEAPONS SCHOOL

LIGHTING FLOOR PLAN
SECOND FLOOR AREA B
BUILDING 282 ADDITION

Sheet reference number:

E-107A

Border Revised 03/01/04, 02E3012.DWG

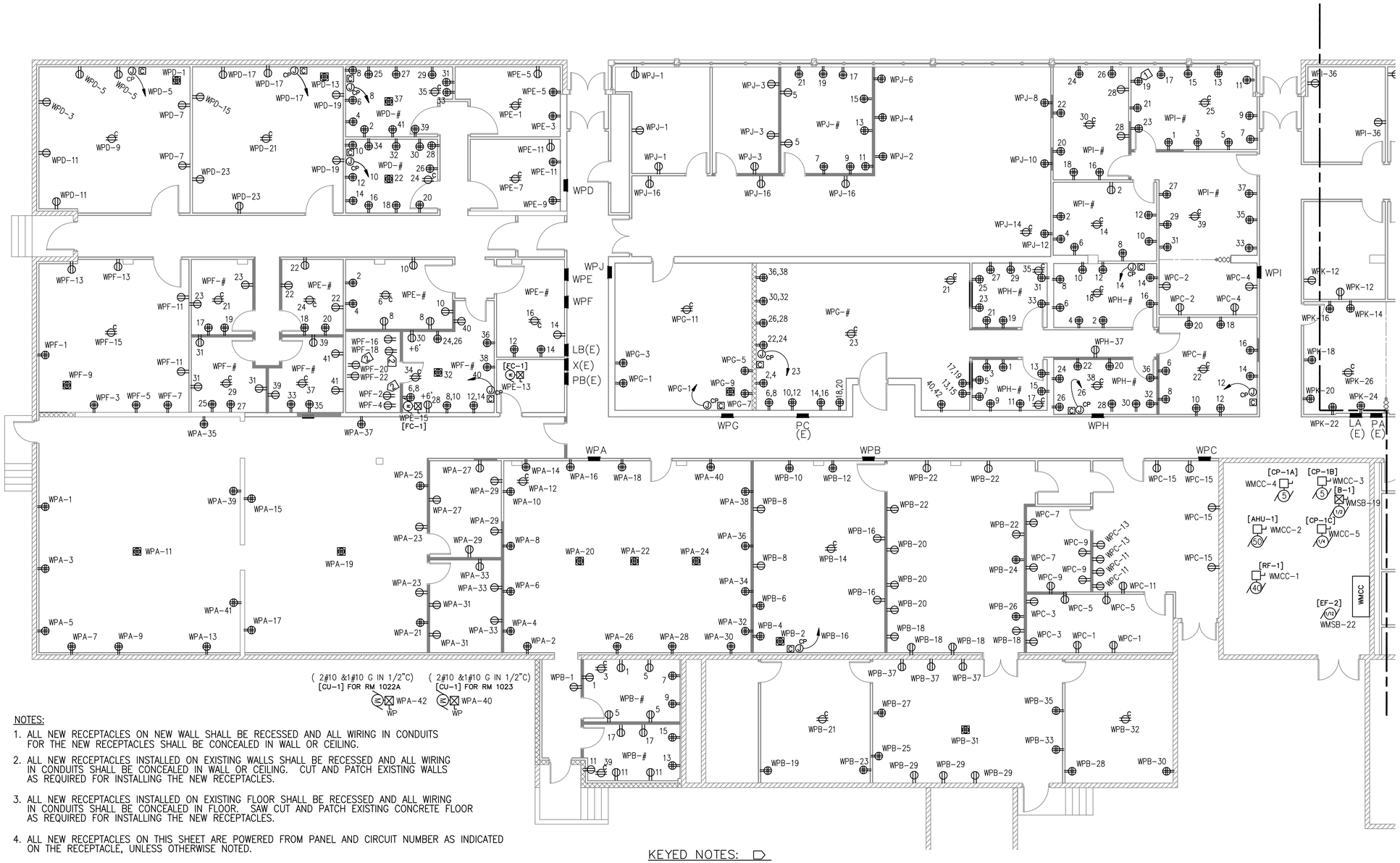

NOTES:

1. ALL NEW RECEPTACLES ON NEW WALL SHALL BE RECESSED AND ALL WIRING IN CONDUITS FOR THE NEW RECEPTACLES SHALL BE CONCEALED IN WALL OR CEILING.
2. ALL NEW RECEPTACLES INSTALLED ON EXISTING WALLS SHALL BE RECESSED AND ALL WIRING IN CONDUITS SHALL BE CONCEALED IN WALL OR CEILING. CUT AND PATCH EXISTING WALLS AS REQUIRED FOR INSTALLING THE NEW RECEPTACLES.
3. ALL NEW RECEPTACLES INSTALLED ON EXISTING FLOOR SHALL BE RECESSED AND ALL WIRING IN CONDUITS SHALL BE CONCEALED IN FLOOR. SAW CUT AND PATCH EXISTING CONCRETE FLOOR AS REQUIRED FOR INSTALLING THE NEW RECEPTACLES.
4. ALL NEW RECEPTACLES ON THIS SHEET ARE POWERED FROM PANEL AND CIRCUIT NUMBER AS INDICATED ON THE RECEPTACLE, UNLESS OTHERWISE NOTED.
5. PROVIDE NUMBER OF #12 CONDUCTORS IN 1/2" CONDUIT AS NECESSARY FOR EACH RECEPTACLES CIRCUIT WITH GROUND AND THE NEUTRAL CONDUCTOR SHALL BE MINIMUN #10.
6. POWER CIRCUIT FOR PROJECTION SCREEN SHALL BE 2#12 & 1#12 G IN 1/2" C. CONTROL WIRING SHALL BE AS RECOMMENDED BY THE MANUFACTURER.

KEYED NOTES:

1. POWER OUTLET FOR COMMUNICATION CABINET.
2. POWER OUTLET FOR COMMUNICATION RACK, COORDINATE LOCATION WITH RACK.

POWER FLOOR PLAN – BUILDING 282 – AREA A

SCALE: 1/8" = 1'-0

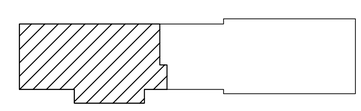

KEY PLAN

NTS

GRAPHIC SCALE

1/8"=1'-0" 0' 2' 4' 8' 16' 24'

REFERENCE

NORTH

US Army Corps of Engineers
Sacramento District

Symbol	Description	Date	Approved

Designed by: F. LUM
Dwn by: J. FRESCAS
Reviewed by: J. PARRISH
Approved by: Maj. Thomas E. Nissen
Chief, Mech./Elec. Des. Sec.

Date: 10/21/05
Spec No.: 1304
Design file no: 229-25-539
Drawing Code:
File name: N3SE-110ouc.dwg
Plot date:
Dwg scale: AS_NOTED

Rev.

DEPARTMENT OF THE ARMY
CORPS OF ENGINEERS
SACRAMENTO, CALIFORNIA

SACRAMENTO DISTRICT
IN-HOUSE DESIGN
1325 J STREET
SACRAMENTO, CA 95814-2922

NEVADA

NELLIS AFB

F/A-22 ADD/ALTER WEAPONS SCHOOL

POWER FLOOR PLAN
BUILDING 282
FLOOR PLAN AREA A

Sheet reference number:

E-110

Border Revised 03/01/04, 02E3N102.DWG

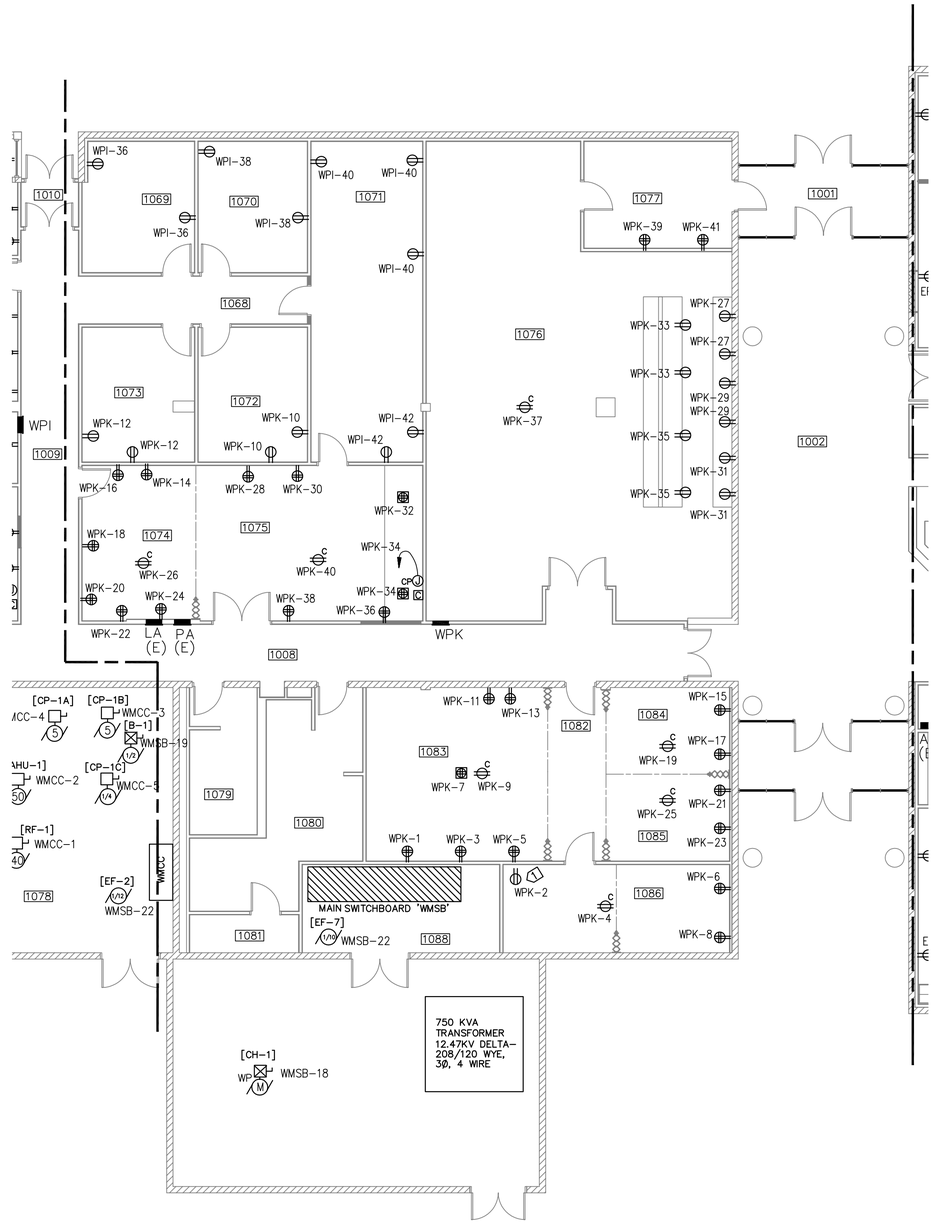

POWER FLOOR PLAN – BUILDING 282 – AREA B

SCALE: 1/8" = 1'-0

NOTES:

1. ALL NEW RECEPTACLES ON NEW WALL SHALL BE RECESSED AND ALL WIRING IN CONDUITS FOR THE NEW RECEPTACLES SHALL BE CONCEALED IN WALL OR CEILING.
2. ALL NEW RECEPTACLES INSTALLED ON EXISTING WALLS SHALL BE RECESSED AND ALL WIRING IN CONDUITS SHALL BE CONCEALED IN WALL OR CEILING. CUT AND PATCH EXISTING WALLS AS REQUIRED FOR INSTALLING THE NEW RECEPTACLES.
3. ALL NEW RECEPTACLES INSTALLED ON EXISTING FLOOR SHALL BE RECESSED AND ALL WIRING IN CONDUITS SHALL BE CONCEALED IN FLOOR. SAW CUT AND PATCH EXISTING CONCRETE FLOOR AS REQUIRED FOR INSTALLING THE NEW RECEPTACLES.
4. ALL NEW RECEPTACLES ON THIS SHEET ARE POWERED FROM PANEL AND CIRCUIT NUMBER AS INDICATED ON THE RECEPTACLE, UNLESS OTHERWISE NOTED.
5. PROVIDE NUMBER OF #12 CONDUCTORS IN 1/2" CONDUIT AS NECESSARY FOR EACH RECEPTACLES CIRCUIT WITH GROUND AND THE NEUTRAL CONDUCTOR SHALL BE MINIMUN #10.
6. ALL ATU(S) IN THIS AREA SHALL BE CONNECTED TO CIRCUITS WPI-32 OR WPI-34. SEE SHEET M-102 FOR ACTUAL NUMBERS AND LOCATION OF ALL ATU(S). THERE SHALL BE NO MORE THAN 8 ATU(S) CONNECTED TO EACH OF THE ABOVE INDICATED CIRCUIT. ALL CIRCUIT SHALL BE 2#12 AND 1#12 G IN 1/2" CONDUIT. PROVIDE THE REQUIRED FLEX CONDUIT CONNECTION NEAR THE ATU AND DISCONNECT SWITCH PER THE ATU MANUFACTURER RECOMMENDATION.
7. POWER CIRCUIT FOR PROJECTION SCREEN SHALL BE 2#12 & 1#12 G IN 1/2" C. CONTROL WIRING SHALL BE AS RECOMMENDED BY THE MANUFACTURER.

KEYED NOTE:

1. POWER OUTLET FOR COMMUNICATION CABINET, COORDINATE LOCATION WITH COMMUNICATION CABINET.

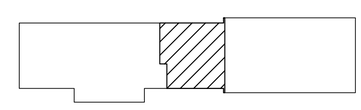

KEY PLAN
NTS

GRAPHIC SCALE

1/8"=1'-0" 0' 2' 4' 8' 16' 24'

REFERENCE NORTH

US Army Corps of Engineers
Sacramento District

Symbol	Description	Date	Approved

Designed by: F. LUM
Dwn by: J. FRESCAS
Spec No.: 1304
Reviewed by: J. PARRISH
Approved by: Maj. Thomas E. Nissen, Chief, Mech./Elec. Des. Sec.
Date: 10/21/05
Design file no: 229-25-539
Drawing Code:
Rev.
File name: N3SE-111xxc.dwg
Plot date:
Dwg scale: AS_NOTED

DEPARTMENT OF THE ARMY
CORPS OF ENGINEERS
SACRAMENTO, CALIFORNIA

SACRAMENTO DISTRICT
IN-HOUSE DESIGN
1325 J STREET
SACRAMENTO, CA 95814-2922

NELLIS AFB
NEVADA

F/A-22 ADD/ALTER WEAPONS SCHOOL

POWER FLOOR PLAN
BUILDING 282
FLOOR PLAN AREA B

Sheet reference number:
E-111

Border Revised 03/01/04, 02E3/102.DWG

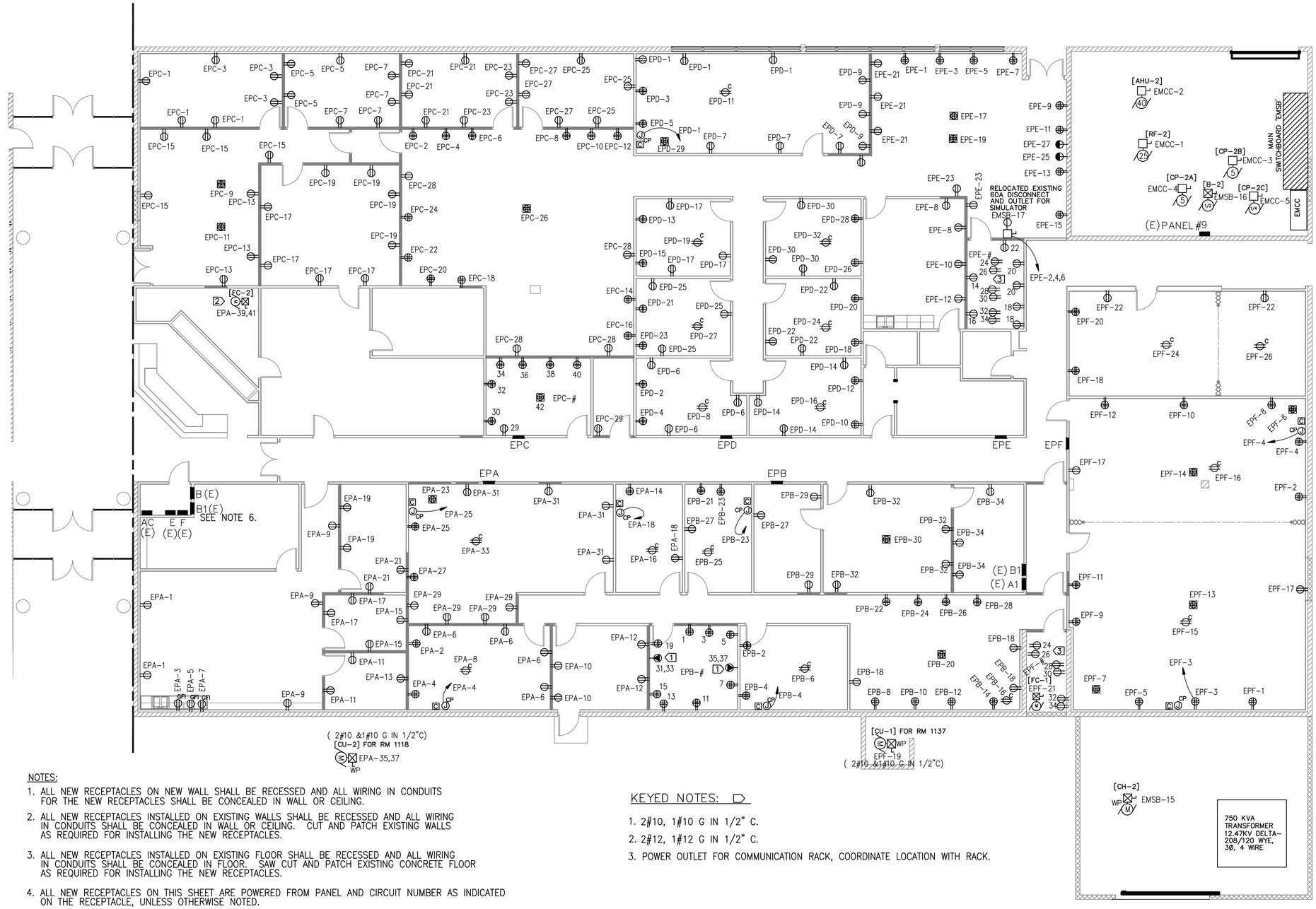

NOTES:

1. ALL NEW RECEPTACLES ON NEW WALL SHALL BE RECESSED AND ALL WIRING IN CONDUITS FOR THE NEW RECEPTACLES SHALL BE CONCEALED IN WALL OR CEILING.
2. ALL NEW RECEPTACLES INSTALLED ON EXISTING WALLS SHALL BE RECESSED AND ALL WIRING IN CONDUITS SHALL BE CONCEALED IN WALL OR CEILING. CUT AND PATCH EXISTING WALLS AS REQUIRED FOR INSTALLING THE NEW RECEPTACLES.
3. ALL NEW RECEPTACLES INSTALLED ON EXISTING FLOOR SHALL BE RECESSED AND ALL WIRING IN CONDUITS SHALL BE CONCEALED IN FLOOR. SAW CUT AND PATCH EXISTING CONCRETE FLOOR AS REQUIRED FOR INSTALLING THE NEW RECEPTACLES.
4. ALL NEW RECEPTACLES ON THIS SHEET ARE POWERED FROM PANEL AND CIRCUIT NUMBER AS INDICATED ON THE RECEPTACLE, UNLESS OTHERWISE NOTED.
5. PROVIDE NUMBER OF #12 CONDUCTORS IN 1/2" CONDUIT AS NECESSARY FOR EACH RECEPTACLES CIRCUIT WITH GROUND AND THE NEUTRAL CONDUCTOR SHALL BE MINIMUN #10.
6. THIS EXISTING PANEL 'B1' HAS SERVICE ALREADY DISCONNECTED AND DOES NOT REQUIRE RECONNECT TO NEW "EMSB". IT SHALL BE ABANDON IN PLACE.
7. POWER CIRCUIT FOR PROJECTION SCREEN SHALL BE 2#12 & 1#12 G IN 1/2" C. CONTROL WIRING SHALL BE AS RECOMMENDED BY THE MANUFACTURER.

KEYED NOTES:

1. 2#10, 1#10 G IN 1/2" C.
2. 2#12, 1#12 G IN 1/2" C.
3. POWER OUTLET FOR COMMUNICATION RACK, COORDINATE LOCATION WITH RACK.

POWER FLOOR PLAN – BUILDING 282 – AREA C

SCALE: 1/8" = 1'-0

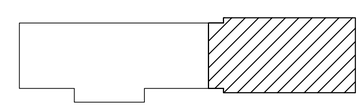

KEY PLAN

NTS

GRAPHIC SCALE

1/8"=1'-0" 0' 2' 4' 8' 16' 24'

REFERENCE

NORTH

US Army Corps of Engineers
Sacramento District

Symbol	Description	Date	Approved

Designed by: F. LUM
Dwn by: J. FRESCAS
Ckd by: J. PARRISH
Rev. by: Chief, Mech./Elec. Des. Sec.
Date: 10/21/05
Spec No.: 1304
Reviewed by: J. PARRISH
Approved by: Chief, Mech./Elec. Des. Sec.
Design file no.: 229-25-539
Drawing Code:
File name: N3E-112xxc.dwg
Plot date:
Dwg scale: AS_NOTED

DEPARTMENT OF THE ARMY
CORPS OF ENGINEERS
SACRAMENTO, CALIFORNIA

SACRAMENTO DISTRICT
IN-HOUSE DESIGN
1325 J STREET
SACRAMENTO, CA 95814-2922

NEVADA

NELLIS AFB

F/A-22 ADD/ALTER WEAPONS SCHOOL

POWER FLOOR PLAN
BUILDING 282
FLOOR PLAN AREA C

Sheet reference number:

E-112

Border Revised: 03/01/04, CDESIGN02.DWG

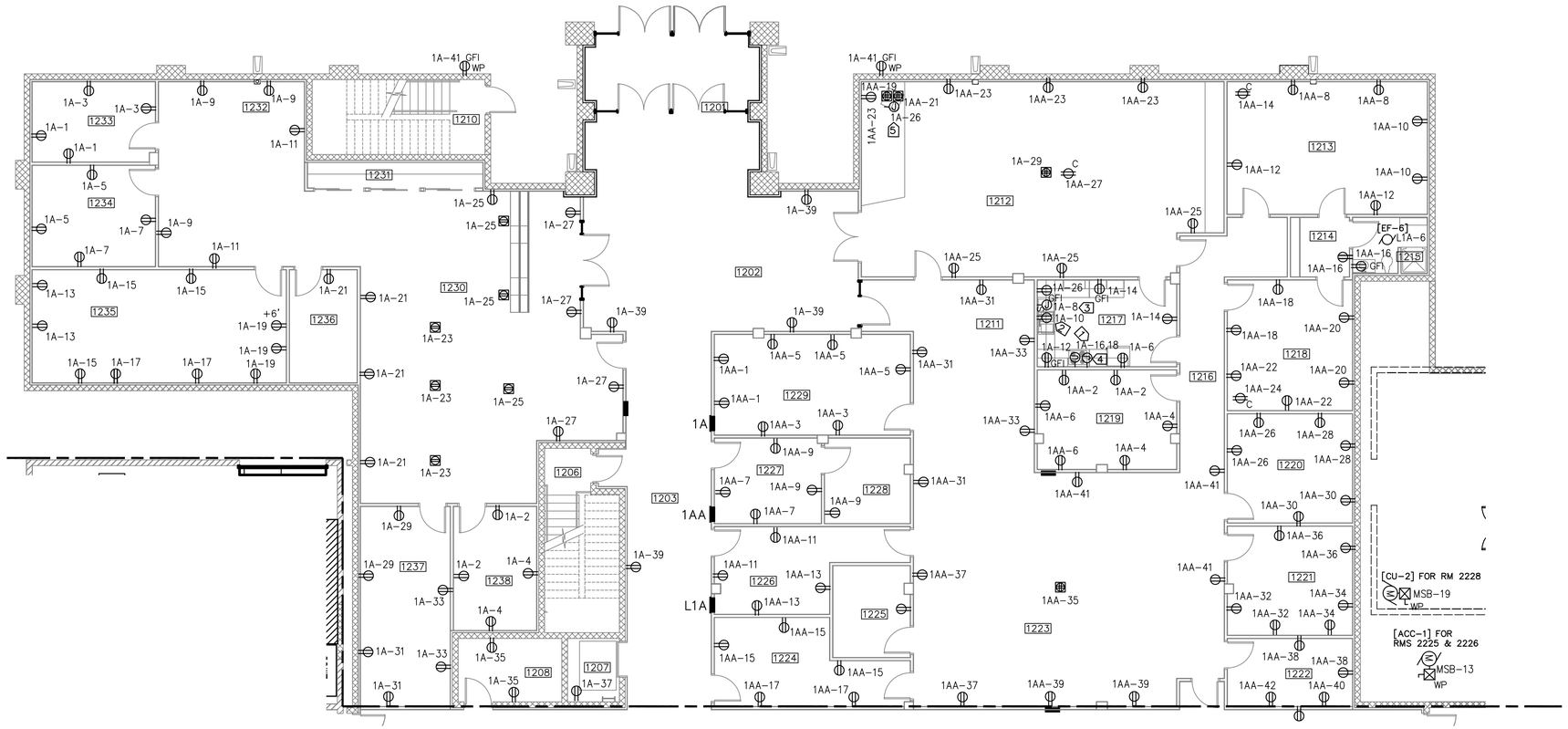

NOTES:

1. ALL RECEPTACLES ON THIS SHEET ARE POWERED FROM PANEL AND CIRCUIT NUMBER AS INDICATED ON THE RECEPTACLE, UNLESS OTHERWISE NOTED.
2. PROVIDE NUMBER OF #12 CONDUCTORS IN 1/2" CONDUIT AS NECESSARY FOR EACH RECEPTACLES CIRCUIT WITH GROUND AND THE NEUTRAL CONDUCTOR SHALL BE MINIMUN #10.
3. ALL ATU(S) IN THIS AREA SHALL BE CONNECTED TO CIRCUITS 1A-20, 1A-22 OR 1A-24. SEE SHEETS M-104 AND M-105 FOR ACTUAL NUMBERS AND LOCATION OF ALL ATU(S). THERE SHALL BE NO MORE THAN 12 ATU(S) CONNECTED TO EACH OF THE ABOVE INDICATED CIRCUIT. ALL CIRCUIT SHALL BE 2#12 AND 1#12 G IN 1/2" CONDUIT. PROVIDE THE REQUIRED FLEX CONDUIT CONNECTION NEAR THE ATU AND DISCONNECT SWITCH PER THE ATU MANUFACTURER RECOMMENDATION.
4. POWER CIRCUIT FOR PROJECTION SCREEN SHALL BE 2#12 & 1#12 G IN 1/2" C. CONTROL WIRING SHALL BE AS RECOMMENDED BY THE MANUFACTURER.

KEYED NOTES:

1. ELECTRICAL COOK TOP CIRCUIT 1A-16,18 SHALL BE WITH 3#4 & 1#10 G IN 3/4" C
2. OUTLET FOR 1/3 HP GARBAGE DISPOSAL WITH SWITCH ABOVE COUNTER TO CONTROL THE OUTLET.
3. 2#12, 1#12 G FOR DISH WASHER.
4. EXHAUST HOOD SHALL BE CONNECTED TO CIRCUIT 1A-12 WITH 2#12 & 1#12 G IN 1/2"C.
5. 2#12, 1#12 G FOR PA AMP (JUNCTION BOX SYMBOL). MOUNT ALL THREE DEVICES – JUNCITON BOX AND TWO FOURPLEX RECEPTACLES – BENEATH PODIUM. TWO FOURPLEX RECEPTACLES SHOULD BE FLUSH MOUNTED IN RAISED PLATFORM.

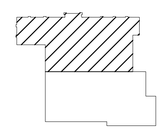

KEY PLAN
NTS

GRAPHIC SCALE
1/8"=1'-0" 0' 2' 4' 8' 16' 24'

REFERENCE
NORTH

POWER FLOOR PLAN – BUILDING 282 ADDITION – FIRST FLOOR AREA A

SCALE: 1/8" = 1'-0

US Army Corps of Engineers
Sacramento District

Symbol	Description	Date	Approved

Rev.
Date: 10/21/05
Design file no: 229-25-539
Drawing Code:
File name: N39E-113acc.dwg
Plot date:
Dwg scale: AS_NOTED

Designed by: F. LUM
Spec No.: 1304
Dwn by: J. FRESCAS
Reviewed by: J. PARRISH
Submitted by: /s/ Thomas E. Nissen Chief, Mech./Elec. Sec.

DEPARTMENT OF THE ARMY
CORPS OF ENGINEERS
SACRAMENTO, CALIFORNIA

SACRAMENTO DISTRICT
IN-HOUSE DESIGN
1325 J STREET
SACRAMENTO, CA 95814-2922

NEVADA
NELLIS AFB
F/A-22 ADD/ALTER WEAPONS SCHOOL
POWER FLOOR PLAN
FIRST FLOOR AREA A
BUILDING 282 ADDITION

Sheet reference number:
E-113

Border Revised 03/01/04, CEGHT02.DWG

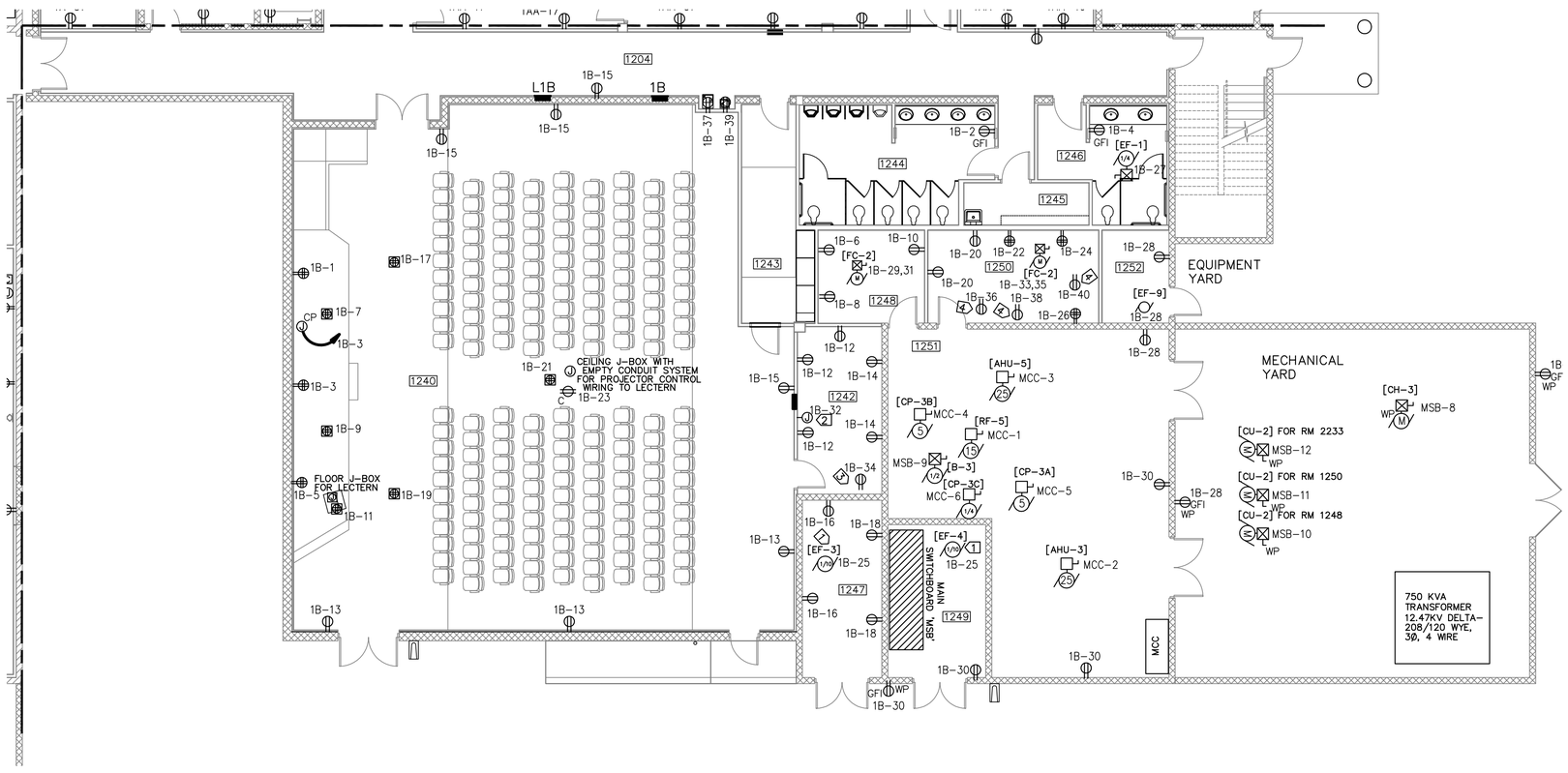

NOTES:

1. ALL RECEPTACLES ON THIS SHEET ARE POWERED FROM PANEL AND CIRCUIT NUMBER AS INDICATED ON THE RECEPTACLE, UNLESS OTHERWISE NOTED.
2. PROVIDE NUMBER OF #12 CONDUCTORS IN 1/2" CONDUIT AS NECESSARY FOR EACH RECEPTACLE CIRCUIT, UNLESS OTHERWISE NOTED.
3. ALL HVAC EQUIPMENT ON THIS SHEET ARE POWERED FROM MSB OR MCC AND CIRCUIT NUMBER AS INDICATED SEE ONE-LINE DIAGRAM ON SHEET E-601 FOR WIRE AND CONDUIT SIZE, UNLESS OTHERWISE NOTED.
4. FOR ATU POWER CONNECTION, SEE SHEET E-113, NOTE 3.
5. POWER CIRCUIT FOR PROJECTION SCREEN SHALL BE 2#12 & 1#12 G IN 1/2" C. CONTROL WIRING SHALL BE AS RECOMMENDED BY THE MANUFACTURER.

KEYED NOTES:

1. EF-3 AND EF-4 ARE CONTROL BY WALL MOUNTED 120 VOLTAGE THERMOSTAT. SEE SHEET M-402.
2. 2#12, 1#12 G FOR PA AMP.
3. POWER OUTLET FOR COMMUNICATION WALL MOUNTED CABINET.
4. POWER OUTLET FOR COMMUNICATION FLOOR CABINET, COORDINATE LOCATION, SEE SHEET E-508 DETAILS.

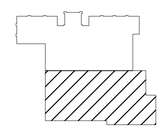

KEY PLAN
NTS

GRAPHIC SCALE
1/8"=1'-0"
0' 2' 4' 8' 16' 24'

REFERENCE
NORTH

POWER FLOOR PLAN – BUILDING 282 ADDITION – FIRST FLOOR AREA B

SCALE: 1/8" = 1'-0

US Army Corps of Engineers
Sacramento District

Symbol	Description	Date	Approved

Rev.

Date: 10/21/05
Design file no: 229-25-539
Drawing Code:
File name: N3E-114xxx.dwg
Plot date:
Dwg scale: AS_NOTED

Designed by: F. LUM
Dwn by: J. FRESCAS
Spec No.: 13U4
Reviewed by: J. PARRISH
Approved by: Thomas E. Nissen, Chief, Mech./Elec. Sec.

DEPARTMENT OF THE ARMY
CORPS OF ENGINEERS
SACRAMENTO, CALIFORNIA

SACRAMENTO DISTRICT
IN-HOUSE DESIGN
1325 J STREET
SACRAMENTO, CA 95814-2922

NEVADA
NELLIS AFB
F/A-22 ADD/ALTER WEAPONS SCHOOL

POWER FLOOR PLAN
FIRST FLOOR AREA B
BUILDING 282 ADDITION

Sheet reference number:
E-114

Border Revised 03/09/04, CE3D11X22.DWG

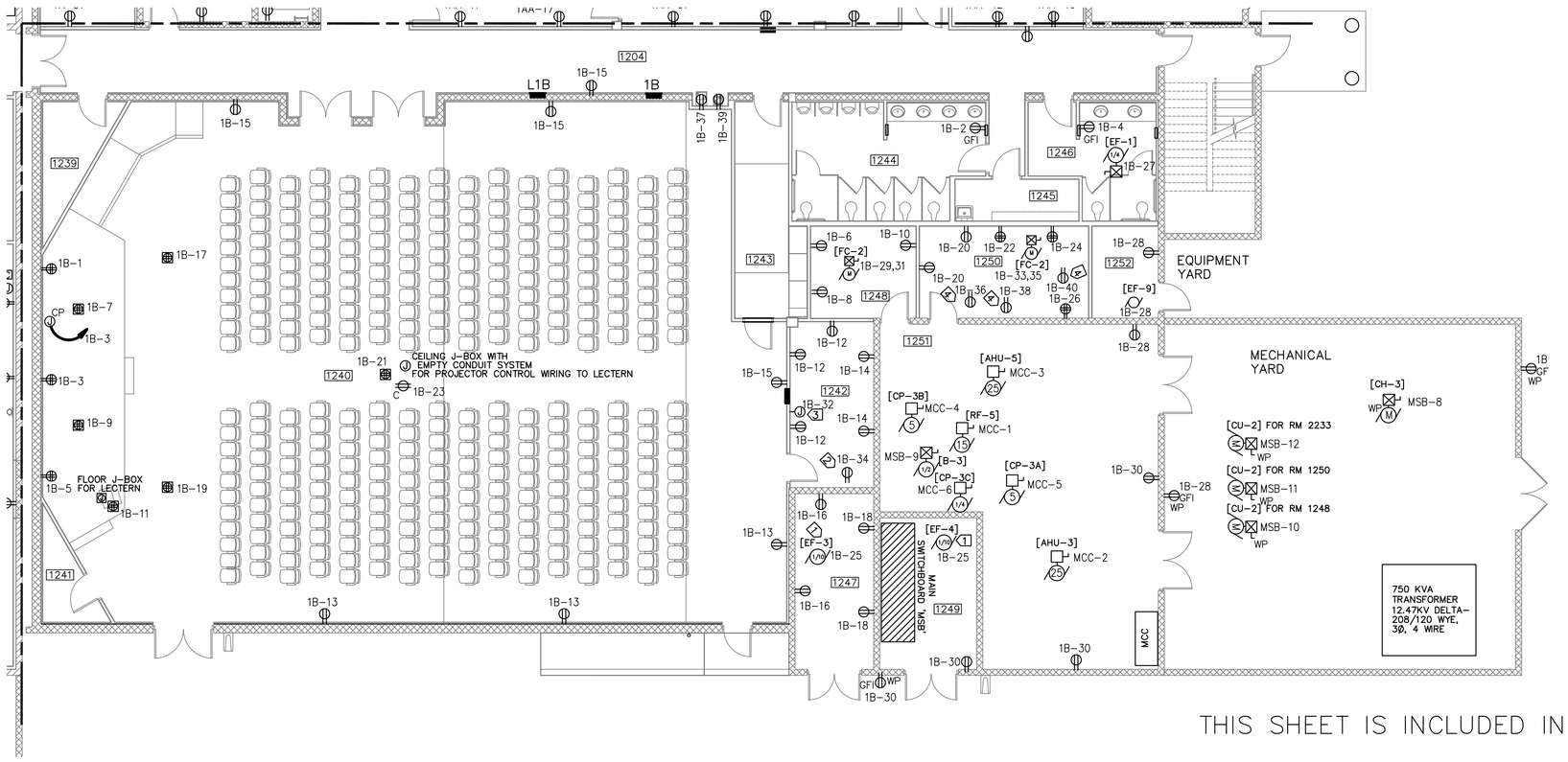

THIS SHEET IS INCLUDED IN BID OPTION 1

NOTES:

1. ALL RECEPTACLES ON THIS SHEET ARE POWERED FROM PANEL AND CIRCUIT NUMBER AS INDICATED ON THE RECEPTACLE, UNLESS OTHERWISE NOTED.
2. PROVIDE NUMBER OF #12 CONDUCTORS IN 1/2" CONDUIT AS NECESSARY FOR EACH RECEPTACLE CIRCUIT, UNLESS OTHERWISE NOTED.
3. ALL HVAC EQUIPMENT ON THIS SHEET ARE POWERED FROM MSB OR MCC AND CIRCUIT NUMBER AS INDICATED SEE ONE-LINE DIAGRAM ON SHEET E-601 FOR WIRE AND CONDUIT SIZE, UNLESS OTHERWISE NOTED.
4. FOR ATU POWER CONNECTION, SEE SHEET E-113, NOTE 3.
5. POWER CIRCUIT FOR PROJECTION SCREEN SHALL BE 2#12 & 1#12 G IN 1/2" C. CONTROL WIRING SHALL BE AS RECOMMENDED BY THE MANUFACTURER.

KEYED NOTES:

1. EF-3 AND EF-4 ARE CONTROL BY WALL MOUNTED 120 VOLTAGE THERMOSTAT. SEE SHEET M-402.
2. POWER OUTLET FOR COMMUNICATION WALL MOUNTED CABINET.
3. 2#12, 1#12 G FOR PA AMP.
4. POWER OUTLET FOR COMMUNICATION FLOOR CABINET, COORDINATE LOCATION, SEE SHEET E-508 DETAILS.

POWER FLOOR PLAN – BUILDING 282 ADDITION – FIRST FLOOR AREA B

SCALE: 1/8" = 1'-0

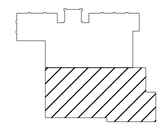

KEY PLAN
NTS

GRAPHIC SCALE
1/8"=1'-0" 0' 2' 4' 8' 16' 24'

REFERENCE
NORTH

US Army Corps of Engineers
Sacramento District

Symbol	Description	Date	Approved

Date: 10/21/05
Rev.
Design file no: 229-25-539
Spec No.: 1304
Drawing Code:
File name: N39E-114Aaxx.dwg
Plot date:
Dwg scale: AS_NOTED

Designed by: F. LUM
Dwn by: J. FRESCAS
Reviewed by: J. PARRISH
Approved by: Thomas E. Nissen
Chief, Mech./Elec. Des. Sec.

DEPARTMENT OF THE ARMY
CORPS OF ENGINEERS
SACRAMENTO, CALIFORNIA

SACRAMENTO DISTRICT
IN-HOUSE DESIGN
1325 J STREET
SACRAMENTO, CA 95814-2922

NEVADA
NELLIS AFB
F/A-22 ADD/ALTER WEAPONS SCHOOL

POWER FLOOR PLAN
FIRST FLOOR AREA B
BUILDING 282 ADDITION

Sheet reference number:
E-114A

Border Revised 03/09/04, CDESN1002.DWG

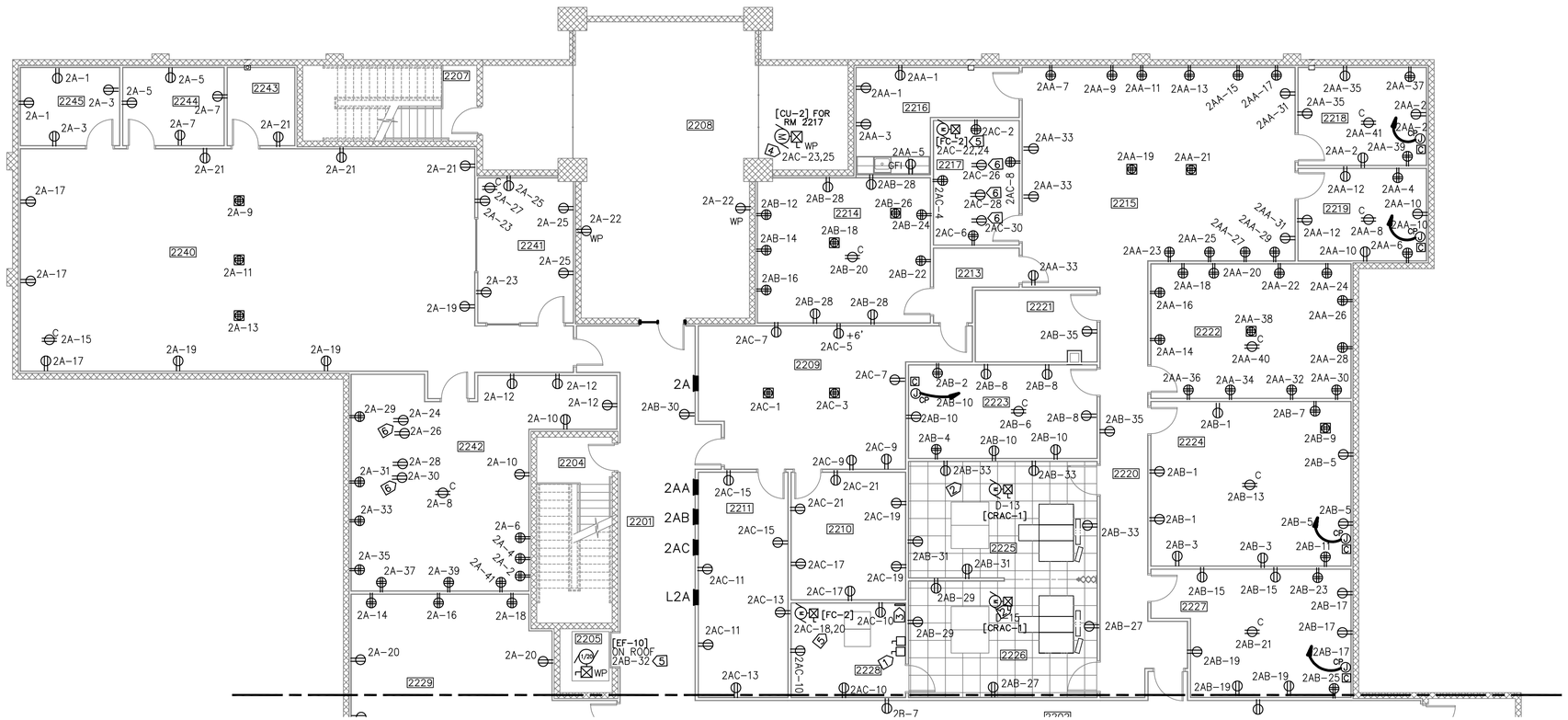

NOTES:

1. ALL RECEPTACLES ON THIS SHEET ARE POWERED FROM PANEL AND CIRCUIT NUMBER AS INDICATED ON THE RECEPTACLE, UNLESS OTHERWISE NOTED.
2. PROVIDE NUMBER OF #12 CONDUCTORS IN 1/2" CONDUIT AS NECESSARY FOR EACH RECEPTACLES CIRCUIT WITH GROUND AND THE NEUTRAL CONDUCTOR SHALL BE MINIMUN #10.
3. ALL ATU(S) IN THIS AREA SHALL BE CONNECTED TO CIRCUITS 2AC-14 OR 2AC-16. SEE SHEET M-106 FOR ACTUAL NUMBERS AND LOCATION OF ALL ATU(S). THERE SHALL BE NO MORE THAN 12 ATU(S) CONNECTED TO EACH OF THE ABOVE INDICATED CIRCUIT. ALL CIRCUIT SHALL BE 2#12 AND 1#12 G IN IN 1/2" CONDUIT. PROVIDE THE REQUIRED FLEX CONDUIT CONNECTION NEAR THE ATU AND DISCONNECT SWITCH PER THE ATU MANUFACTURER RECOMMENDATION.
4. SEE ONE-LINE DIAGRAM ON SHEET E-601 FOR CONDUCTOR AND CONDUIT SIZE FOR HVAC EQUIPMENT, UNLESS OTHERWISE NOTED.
5. POWER CIRCUIT FOR PROJECTION SCREEN SHALL BE 2#12 & 1#12 G IN 1/2" C. CONTROL WIRING SHALL BE AS RECOMMENDED BY THE MANUFACTURER.

KEYED NOTES:

1. 100A, 208V, 3 POLE, NON FUSED DISCONNECT SWITCH MOUNTED 48" ABOVE FINISHED FLOOR. SEE SHEET E-601 POWER ONE-LINE DIAGRAM FOR WIRE AND CONDUIT SIZE.
2. GROUND FLOOR PEDESTAL. SEE DETAIL B, SHEET E-508.
3. SEE DETAIL C, SHEET E-509 FOR GROUND BAR.
4. 2#10, 1#10 G IN 1/2" C.
5. 2#12, 1#12 G IN 1/2" C.
6. POWER OUTLET FOR COMMUNICATION FLOOR CABINET, COORDINATE LOCATION, SEE SHEET E-508 DETAILS.

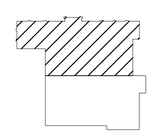

KEY PLAN
NTS

GRAPHIC SCALE
1/8"=1'-0"
0' 2' 4' 8' 16' 24'

REFERENCE
NORTH

POWER FLOOR PLAN – BUILDING 282 ADDITION – SECOND FLOOR AREA A

SCALE: 1/8" = 1'-0

US Army Corps of Engineers
Sacramento District

Symbol	Description	Date	Approved

Rev.

Date: 10/21/05
Design file no: 229-25-539
Drawing Code:
File name: N3SE-115acc.dwg
Plot date:
Dwg scale: AS_NOTED

Designed by: F. LUM
Dwn by: J. PRESCAS
Spec No.: 1304
Reviewed by: J. PARRISH
Submitted by: M. Thomas E. Nissen
Chief, Mech./Elec. Des. Sec.

DEPARTMENT OF THE ARMY
CORPS OF ENGINEERS
SACRAMENTO, CALIFORNIA

SACRAMENTO DISTRICT
IN-HOUSE DESIGN
1325 J STREET
SACRAMENTO, CA 95814-2922

NEVADA
NELLIS AFB
F/A-22 ADD/ALTER WEAPONS SCHOOL

POWER FLOOR PLAN
SECOND FLOOR AREA A
BUILDING 282 ADDITION

Sheet reference number:
E-115

Border Revised 03/01/04, CDESN102.DWG

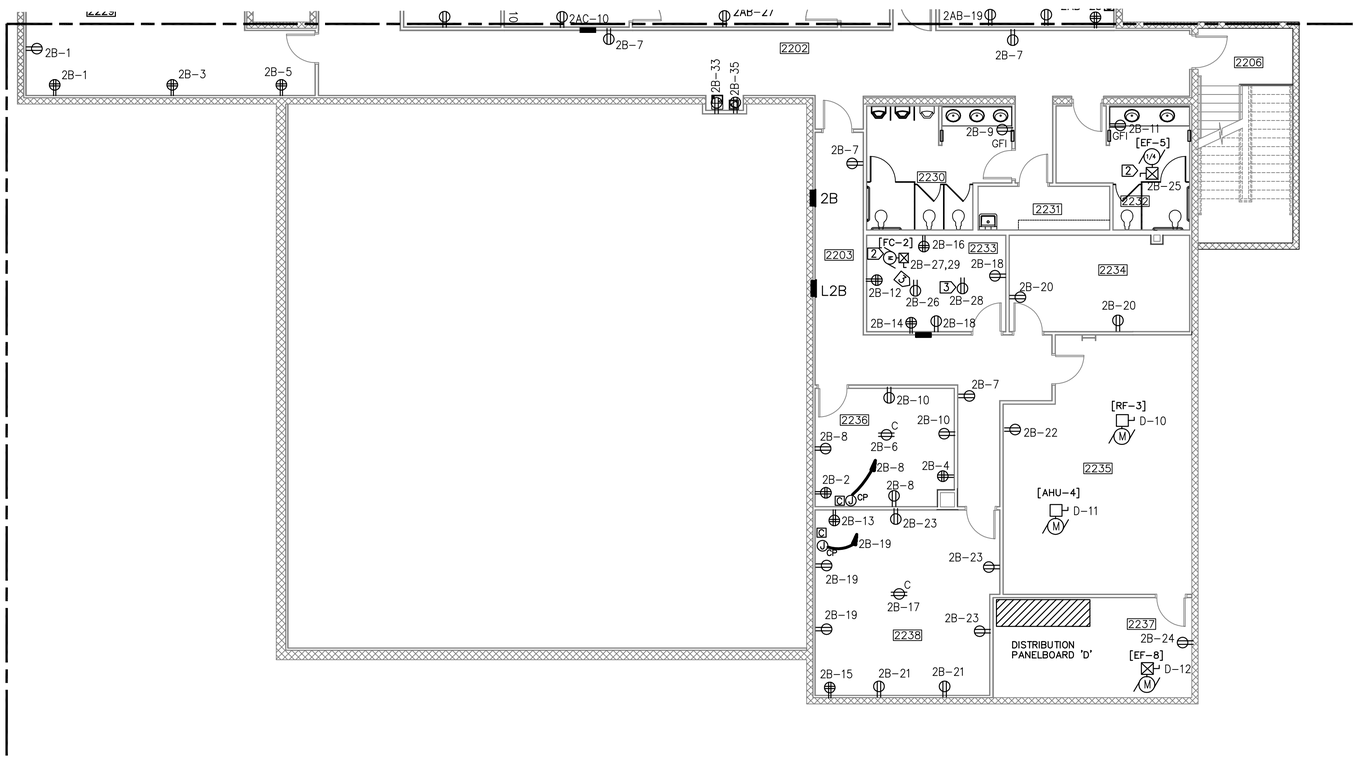

NOTES:

1. ALL RECEPTACLES ON THIS SHEET ARE POWERED FROM PANEL AND CIRCUIT NUMBER AS INDICATED ON THE RECEPTACLE, UNLESS OTHERWISE NOTED.
2. PROVIDE NUMBER OF #12 CONDUCTORS IN 1/2" CONDUIT AS NECESSARY FOR EACH RECEPTACLES CIRCUIT WITH GROUND AND THE NEUTRAL CONDUCTOR SHALL BE MINIMUN #10.
3. ALL ATU(S) IN THIS AREA SHALL BE CONNECTED TO CIRCUITS 2B-31. SEE SHEET M-107 FOR ACTUAL NUMBERS AND LOCATION OF ALL ATU(S). THERE SHALL BE NO MORE THAN 12 ATU(S) CONNECTED TO THE ABOVE INDICATED CIRCUIT. ALL CIRCUIT SHALL BE 2#12 AND 1#12 G IN 1/2" CONDUIT. PROVIDE THE REQUIRED FLEX CONDUIT CONNECTION NEAR THE ATU AND DISCONNECT SWITCH PER THE ATU MANUFACTURER RECOMMENDATION.
4. ALL HVAC EQUIPMENT ON THIS SHEET ARE POWERED FROM MSB OR MCC AND CIRCUIT NUMBER AS INDICATED SEE ONE-LINE DIAGRAM ON SHEET E-601 FOR WIRE AND CONDUIT SIZE, UNLESS OTHERWISE NOTED.
5. POWER CIRCUIT FOR PROJECTION SCREEN SHALL BE 2#12 & 1#12 G IN 1/2" C. CONTROL WIRING SHALL BE AS RECOMMENDED BY THE MANUFACTURER.

KEYED NOTES:

1. 2#10, 1#10 G IN 1/2" C.
2. 2#12, 1#12 G IN 1/2" C.
3. POWER OUTLET FOR COMMUNICATION FLOOR CABINET, COORDINATE LOCATION, SEE SHEET E-508 DETAILS.

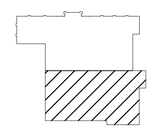

KEY PLAN
NTS

GRAPHIC SCALE
1/8"=1'-0"
0' 2' 4' 8' 16' 24'

REFERENCE
NORTH

POWER FLOOR PLAN – BUILDING 282 ADDITION – SECOND FLOOR AREA B

SCALE: 1/8" = 1'-0

US Army Corps of Engineers
Sacramento District

Symbol	Description	Date	Approved

Designed by: F. LUM
Dwn by: J. FRESCAS
Spec No.: 1304
Reviewed by: J. PARRISH
Submitted by: Thomas E. Nissen
Chief, Mech./Elec. Sec.
Date: 10/21/05
Design file no: 229-25-539
Drawing Code:
Rev.
File name: N3SE-116xxx.dwg
Plot date:
Dwg scale: AS_NOTED

DEPARTMENT OF THE ARMY
CORPS OF ENGINEERS
SACRAMENTO, CALIFORNIA

SACRAMENTO DISTRICT
IN-HOUSE DESIGN
1325 J STREET
SACRAMENTO, CA 95814-2922

NEVADA
NELLIS AFB
F/A-22 ADD/ALTER WEAPONS SCHOOL
POWER FLOOR PLAN
SECOND FLOOR AREA B
BUILDING 282 ADDITION

Sheet reference number:
E-116

Border Revised 03/01/04, CKESHTOZ.DWG

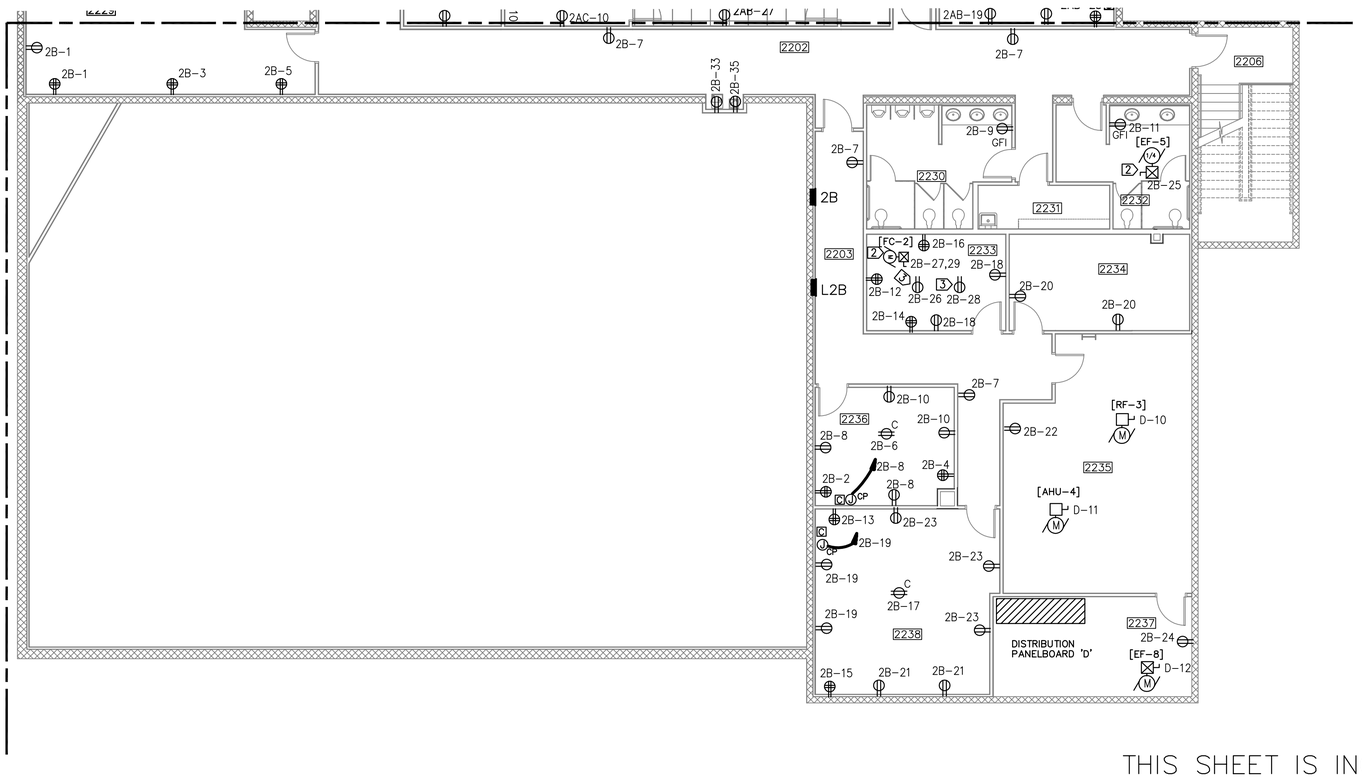

THIS SHEET IS INCLUDED IN BID OPTION 1

NOTES:

1. ALL RECEPTACLES ON THIS SHEET ARE POWERED FROM PANEL AND CIRCUIT NUMBER AS INDICATED ON THE RECEPTACLE, UNLESS OTHERWISE NOTED.
2. PROVIDE NUMBER OF #12 CONDUCTORS IN 1/2" CONDUIT AS NECESSARY FOR EACH RECEPTACLES CIRCUIT WITH GROUND AND THE NEUTRAL CONDUCTOR SHALL BE MINIMUN #10.
3. ALL ATU(S) IN THIS AREA SHALL BE CONNECTED TO CIRCUITS 2B-31. SEE SHEET M-107 FOR ACTUAL NUMBERS AND LOCATION OF ALL ATU(S). THERE SHALL BE NO MORE THAN 12 ATU(S) CONNECTED TO THE ABOVE INDICATED CIRCUIT. ALL CIRCUIT SHALL BE 2#12 AND 1#12 G IN 1/2" CONDUIT. PROVIDE THE REQUIRED FLEX CONDUIT CONNECTION NEAR THE ATU AND DISCONNECT SWITCH PER THE ATU MANUFACTURER RECOMMENDATION.
4. ALL HVAC EQUIPMENT ON THIS SHEET ARE POWERED FROM MSB OR MCC AND CIRCUIT NUMBER AS INDICATED SEE ONE-LINE DIAGRAM ON SHEET E-601 FOR WIRE AND CONDUIT SIZE, UNLESS OTHERWISE NOTED.
5. POWER CIRCUIT FOR PROJECTION SCREEN SHALL BE 2#12 & 1#12 G IN 1/2" C. CONTROL WIRING SHALL BE AS RECOMMENDED BY THE MANUFACTURER.

KEYED NOTES:

1. 2#10, 1#10 G IN 1/2" C.
2. 2#12, 1#12 G IN 1/2" C.
3. POWER OUTLET FOR COMMUNICATION FLOOR CABINET, COORDINATE LOCATION, SEE SHEET E-508 DETAILS.

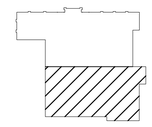

KEY PLAN
NTS

POWER FLOOR PLAN – BUILDING 282 ADDITION – SECOND FLOOR AREA B

SCALE: 1/8" = 1'-0

GRAPHIC SCALE

1/8"=1'-0" 0' 2' 4' 8' 16' 24'

REFERENCE NORTH

US Army Corps of Engineers
Sacramento District

Symbol	Description	Date	Approved

Designed by: F. LUM
Dwn by: J. FRESCAS
Spec No.: 1304
Reviewed by: J.ARRIGH
Submitted by: Jay Thomas E. Nissen, Chief, Mech./Elec. Des. Sec.
Date: 10/21/05
Rev.
Design file no: 229-25-539
Drawing Code:
File name: N3SE-116Axxx.dwg
Plot date:
Dwg scale: AS_NOTED

DEPARTMENT OF THE ARMY
CORPS OF ENGINEERS
SACRAMENTO, CALIFORNIA

SACRAMENTO DISTRICT
IN-HOUSE DESIGN
1325 J STREET
SACRAMENTO, CA 95814-2922

NEVADA
NELLIS AFB
F/A-22 ADD/ALTER WEAPONS SCHOOL

POWER FLOOR PLAN
SECOND FLOOR AREA B
BUILDING 282 ADDITION

Sheet reference number:
E-116A

Border Revised 03/01/04, 02E3010.DWG

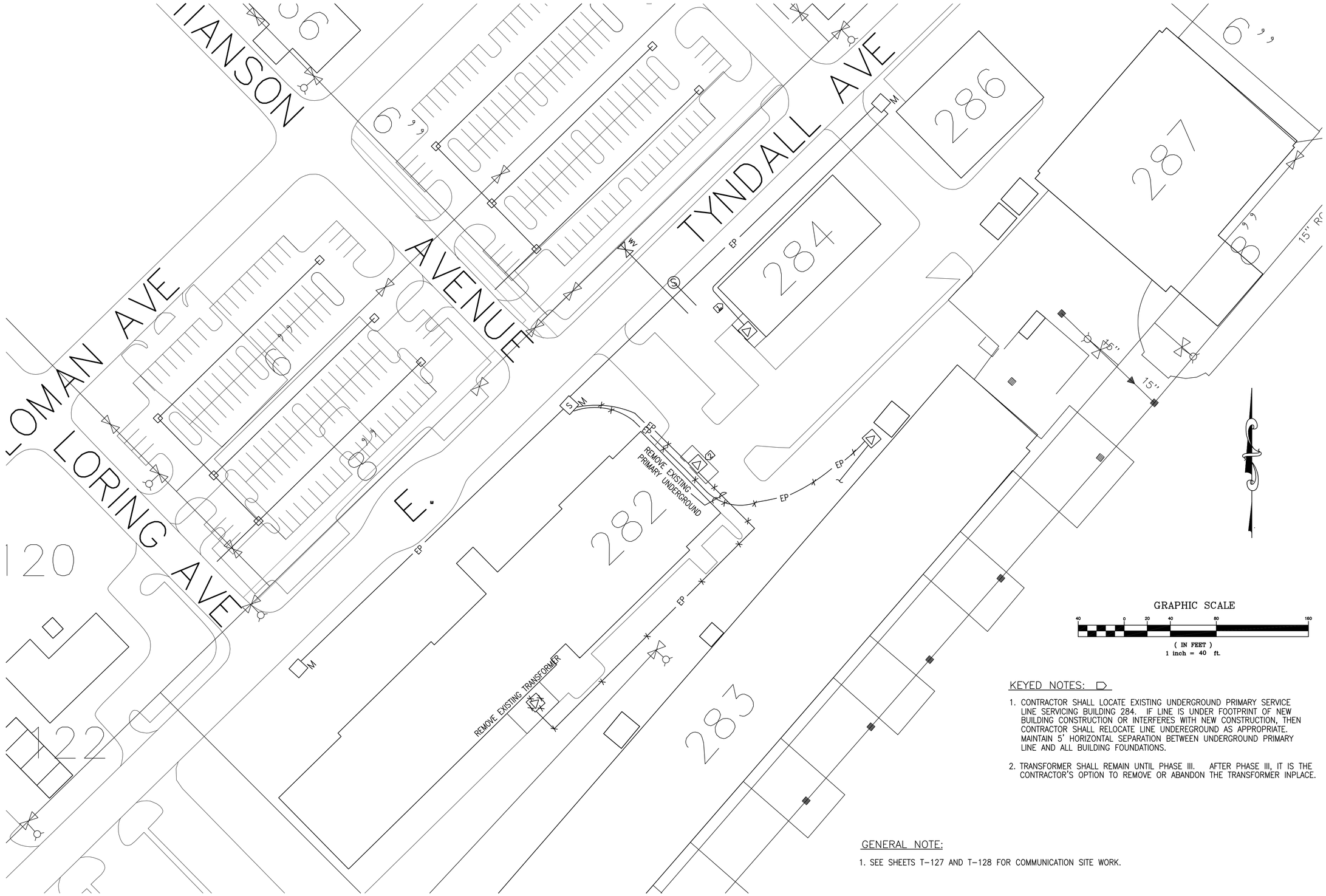

KEYED NOTES:

1. CONTRACTOR SHALL LOCATE EXISTING UNDERGROUND PRIMARY SERVICE LINE SERVICING BUILDING 284. IF LINE IS UNDER FOOTPRINT OF NEW BUILDING CONSTRUCTION OR INTERFERES WITH NEW CONSTRUCTION, THEN CONTRACTOR SHALL RELOCATE LINE UNDEREGROUND AS APPROPRIATE. MAINTAIN 5' HORIZONTAL SEPARATION BETWEEN UNDERGROUND PRIMARY LINE AND ALL BUILDING FOUNDATIONS.

2. TRANSFORMER SHALL REMAIN UNTIL PHASE III. AFTER PHASE III, IT IS THE CONTRACTOR'S OPTION TO REMOVE OR ABANDON THE TRANSFORMER INPLACE.

GENERAL NOTE:

1. SEE SHEETS T-127 AND T-128 FOR COMMUNICATION SITE WORK.

US Army Corps of Engineers
Sacramento District

Symbol	Description	Date	Approved

Designed by: F. LUM
Dwn by: J. FRESCAS
Spec No.: 1304
Reviewed by: J. PARRISH
Submitted by: /s/ Section Chief
Chief, XXXX Des. Sec.
Date: 10/21/05
Design File no: 229-25-539
Drawing Code:
File name: F. LUM
Plot date:
Dwg scale: AS_NOTED
Rev.

DEPARTMENT OF THE ARMY
CORPS OF ENGINEERS
SACRAMENTO, CALIFORNIA

SACRAMENTO DISTRICT
IN-HOUSE DESIGN
1325 J STREET
SACRAMENTO, CA 95814-2922

NEVADA

NELLIS AFB

F/A-22 ADD/ALTER WEAPONS SCHOOL

ELECTRICAL SITE PLAN DEMOLITION

Sheet reference number:
E-120

UPDATE

Border Revised 03/01/04, CODSHEET2.DWG

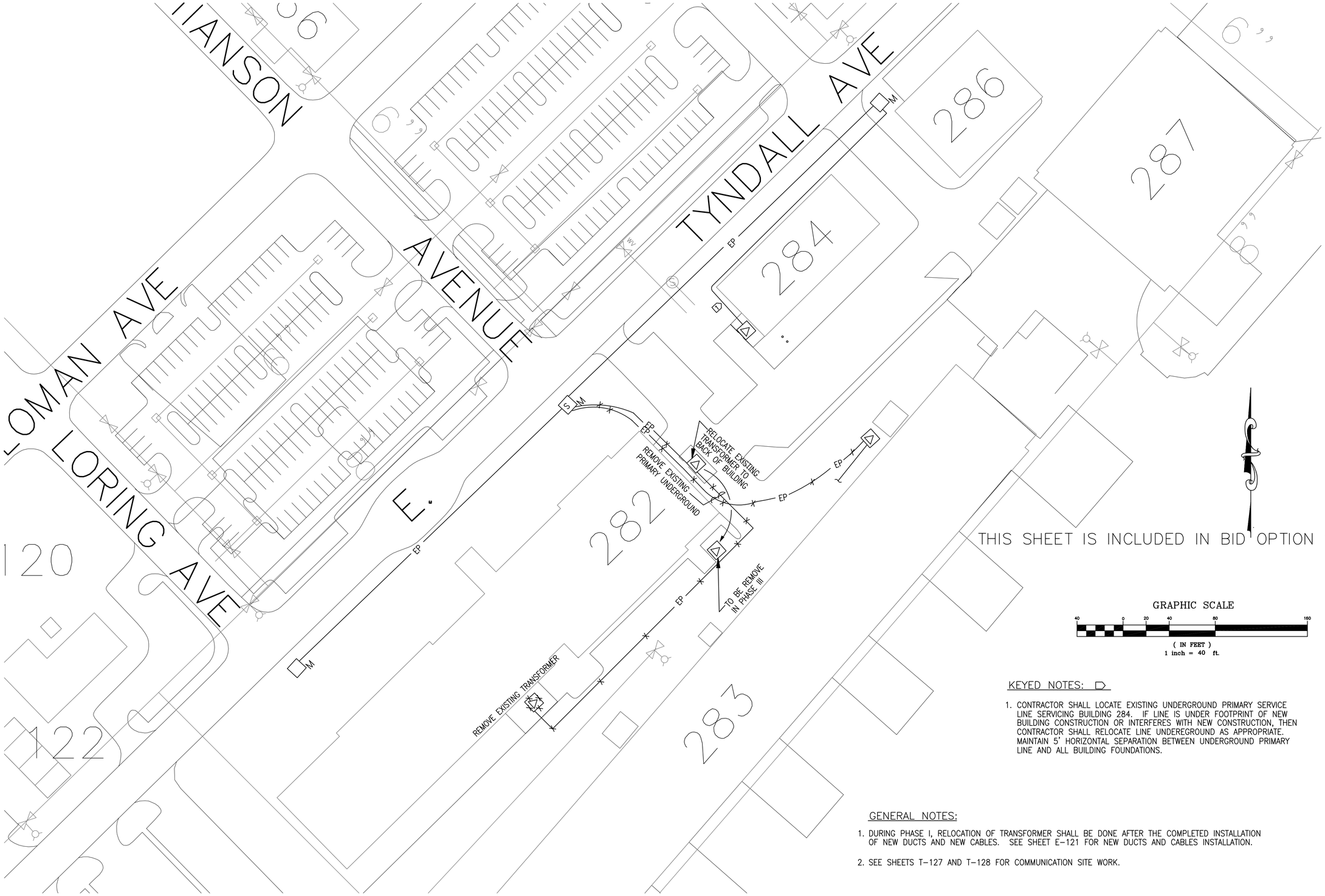

THIS SHEET IS INCLUDED IN BID OPTION 1

GRAPHIC SCALE

40 0 20 40 80 160

(IN FEET)
1 inch = 40 ft.

KEYED NOTES:

1. CONTRACTOR SHALL LOCATE EXISTING UNDERGROUND PRIMARY SERVICE LINE SERVICING BUILDING 284. IF LINE IS UNDER FOOTPRINT OF NEW BUILDING CONSTRUCTION OR INTERFERES WITH NEW CONSTRUCTION, THEN CONTRACTOR SHALL RELOCATE LINE UNDEREGROUND AS APPROPRIATE. MAINTAIN 5' HORIZONTAL SEPARATION BETWEEN UNDERGROUND PRIMARY LINE AND ALL BUILDING FOUNDATIONS.

GENERAL NOTES:

1. DURING PHASE I, RELOCATION OF TRANSFORMER SHALL BE DONE AFTER THE COMPLETED INSTALLATION OF NEW DUCTS AND NEW CABLES. SEE SHEET E-121 FOR NEW DUCTS AND CABLES INSTALLATION.

2. SEE SHEETS T-127 AND T-128 FOR COMMUNICATION SITE WORK.

Border Revised 03/01/04, CADSHT02.DWG

US Army Corps of Engineers
Sacramento District

Symbol	Description	Date	Approved

Designed by: F. LUM
Dwn by: J. FRESCAS
Spec No.: 1304
Reviewed by: J. PARRISH
Submitted by: /s/ Section Chief
Chief, XXXX Des. Sec.
Date: 10/21/05
Design File no: 229-25-539
Drawing Code:
Rev.
File name: F. LUM
Plot date:
Dwg scale: AS_NOTED

DEPARTMENT OF THE ARMY
CORPS OF ENGINEERS
SACRAMENTO, CALIFORNIA

SACRAMENTO DISTRICT
IN-HOUSE DESIGN
1325 J STREET
SACRAMENTO, CA 95814-2922

NEVADA
NELLIS AFB
F/A-22 ADD/ALTER WEAPONS SCHOOL

ELECTRICAL SITE PLAN DEMOLITION

Sheet reference number:
E-120A

UPDATE

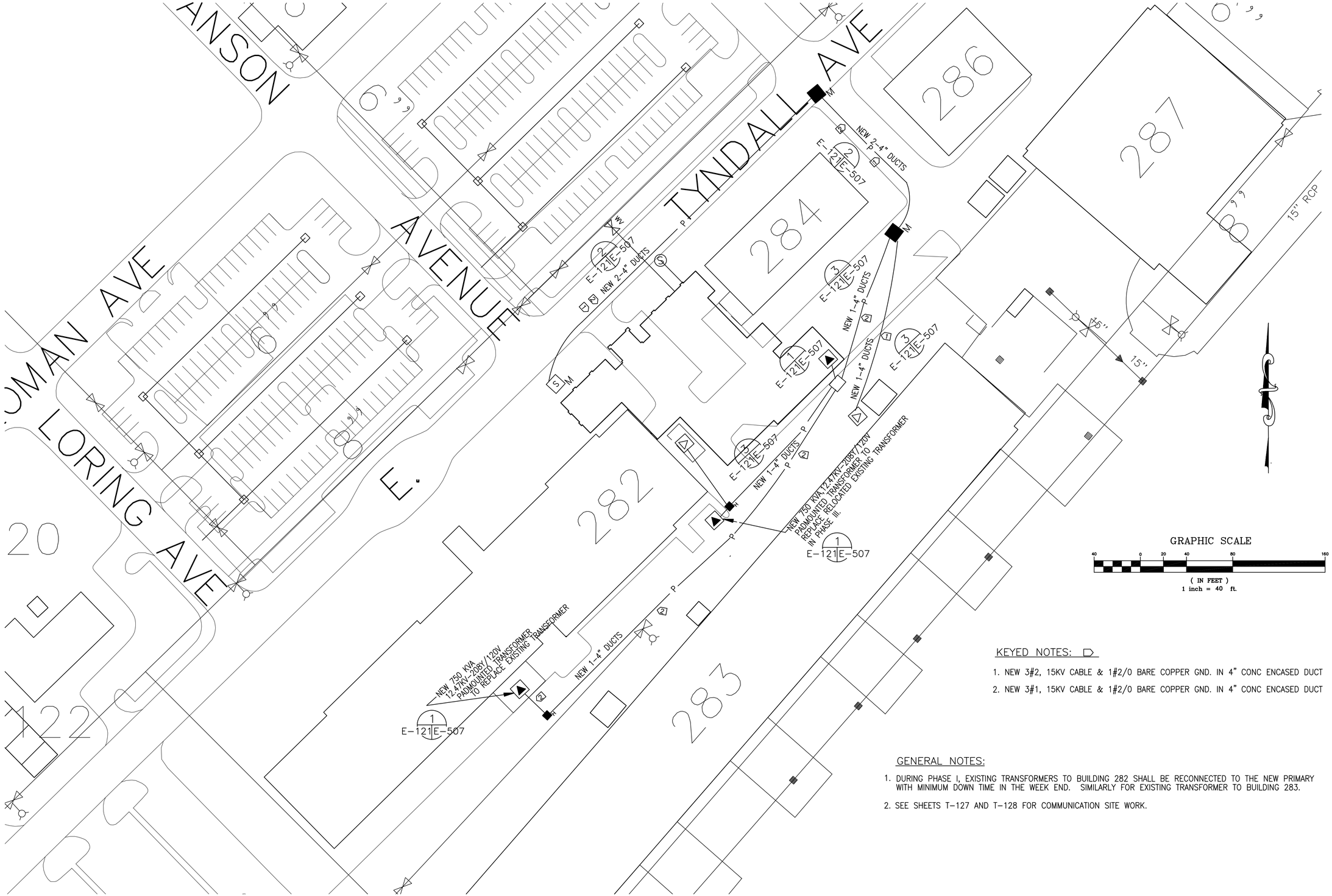

KEYED NOTES:

1. NEW 3#2, 15KV CABLE & 1#2/0 BARE COPPER GND. IN 4" CONC ENCASED DUCT
2. NEW 3#1, 15KV CABLE & 1#2/0 BARE COPPER GND. IN 4" CONC ENCASED DUCT

GENERAL NOTES:

1. DURING PHASE I, EXISTING TRANSFORMERS TO BUILDING 282 SHALL BE RECONNECTED TO THE NEW PRIMARY WITH MINIMUM DOWN TIME IN THE WEEK END. SIMILARLY FOR EXISTING TRANSFORMER TO BUILDING 283.
2. SEE SHEETS T-127 AND T-128 FOR COMMUNICATION SITE WORK.

US Army Corps of Engineers
Sacramento District

Symbol	Description	Date	Approved

Designed by: F. LUM
Dwn by:
Reviewed by:
Submitted by: Chief, Section Chief, XXXX Des. Sec.
Date: 10/21/05
Rev.
Spec No.: 1304
Design File no: 239-25-539
Drawing Code:
File name: F. LUM
Plot date:
Dwg scale: AS_NOTED

DEPARTMENT OF THE ARMY
CORPS OF ENGINEERS
SACRAMENTO, CALIFORNIA

SACRAMENTO DISTRICT
IN-HOUSE DESIGN
1325 J STREET
SACRAMENTO, CA 95814-2922

NELLIS AFB
NEVADA

F/A-22 ADD/ALTER WEAPONS SCHOOL

ELECTRICAL SITE PLAN

Sheet reference number:
E-121

UPDATE

Border: Revised 03/01/04, CDESIGN02.DWG

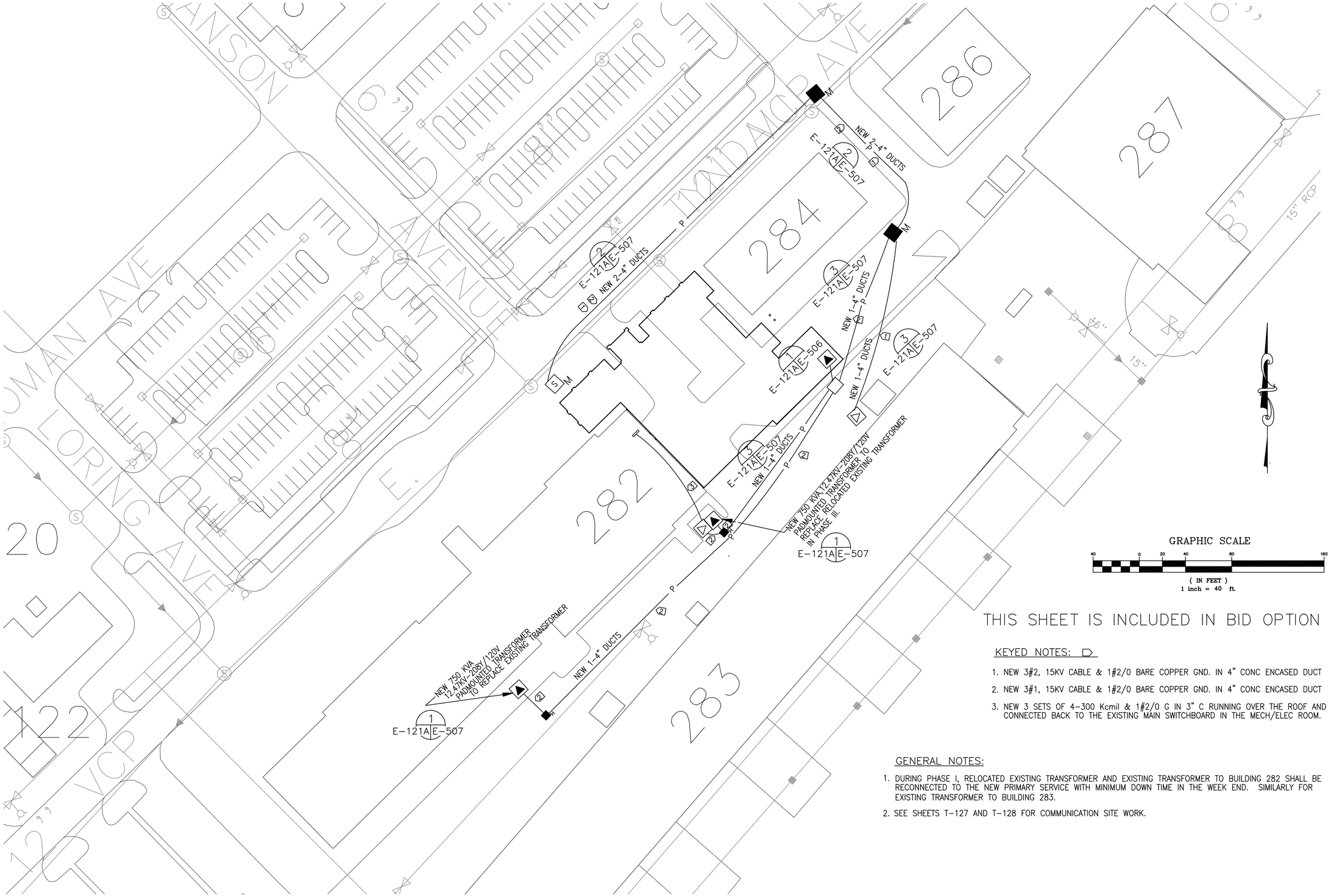

GRAPHIC SCALE

40 0 20 40 80 160

(IN FEET)
1 inch = 40 ft.

THIS SHEET IS INCLUDED IN BID OPTION 1

KEYED NOTES:

1. NEW 3#2, 15KV CABLE & 1#2/0 BARE COPPER GND. IN 4" CONC ENCASED DUCT
2. NEW 3#1, 15KV CABLE & 1#2/0 BARE COPPER GND. IN 4" CONC ENCASED DUCT
3. NEW 3 SETS OF 4-300 Kcmil & 1#2/0 G IN 3" C RUNNING OVER THE ROOF AND CONNECTED BACK TO THE EXISTING MAIN SWITCHBOARD IN THE MECH/ELEC ROOM.

GENERAL NOTES:

1. DURING PHASE I, RELOCATED EXISTING TRANSFORMER AND EXISTING TRANSFORMER TO BUILDING 282 SHALL BE RECONNECTED TO THE NEW PRIMARY SERVICE WITH MINIMUM DOWN TIME IN THE WEEK END. SIMILARLY FOR EXISTING TRANSFORMER TO BUILDING 283.
2. SEE SHEETS T-127 AND T-128 FOR COMMUNICATION SITE WORK.

US Army Corps of Engineers
Sacramento District

Symbol	Description	Date	Approved

Designed by: F. LUM
Dwn by: J. FRESCAS
Spec No.: 1304
Reviewed by: J. PARRISH
Submitted by: Chief, Section
Date: 10/21/05
Design File no: 229-25-539
Drawing Code:
File name: F. LUM
Plot date:
Dwg scale: AS_NOTED
Rev.

DEPARTMENT OF THE ARMY
CORPS OF ENGINEERS
SACRAMENTO, CALIFORNIA

SACRAMENTO DISTRICT
IN-HOUSE DESIGN
1325 J STREET
SACRAMENTO, CA 95814-2922

NEVADA

NELLIS AFB

F/A-22 ADD/ALTER WEAPONS SCHOOL

ELECTRICAL SITE PLAN

Sheet reference number:

E-121A

UPDATE

Border: Revised 03/01/04, CEDSI/TO2.DWG

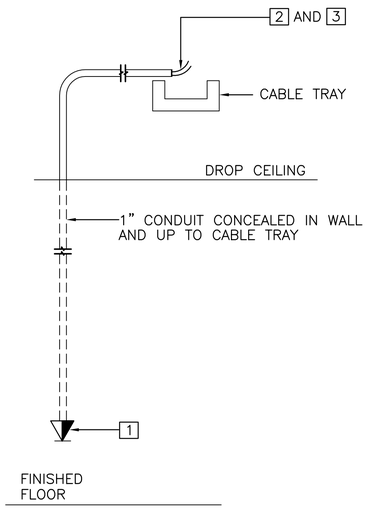

VOICE/NIPR RISER

NOT TO SCALE

NOTES FOR VOICE/DATA RISER:

1. WALL MOUNTED DUPLEX JACK WITH (2) RJ 45 8 PIN CAT 6 MODULAR JACKS TOP "VOICE" AND BOTTON "NIPR", 1" C WITH CABLES TO CABLE TRAY. TYPICAL FOR EACH DUPLEX JACK.

2. 2-4 PAIR CAT 6 CABLE (VOICE) TO 110 BLOCK IN COMM ROOM VIA CABLE TRAY. TERMINATE ON CAT 6 PATCH PANEL

3. 2-4 PAIR CAT 6 CABLE FOR LAN TO PATCH PANEL IN COMM ROOM VIA CABLE TRAY. TERMINATE ON CAT 6 PATCH PANEL.

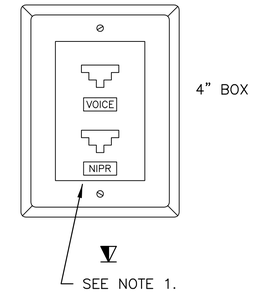

WIRED VOICE AND NIPRNET OUTLET DETAIL (TYPICAL)

NOT TO SCALE

NOTES FOR WIRED VOICE AND NIPRNET OUTLET DETAIL

1. TWO RJ45, 8 POSITION 8 CONDUCTOR JACKS, USING 4PR TWISTED, UNSHIELDED

2. "VOICE" AND "NIPR" SHALL BE PERMANENTLY MARKED ON PLATE AS IDENTIFIED ON THE COMMUNICATION FLOOR PLAN SYMBOLS.

3. "VOICE" JACK SHALL BE WHITE COLOR AND "NIPR" JACK SHALL BE GREEN COLOR.

4. FLOOR MOUNTED OUTLET SHALL BE SIMILAR, EXCEPT WITH COVER AND FLUSHED WITH THE FINISHED FLOOR.

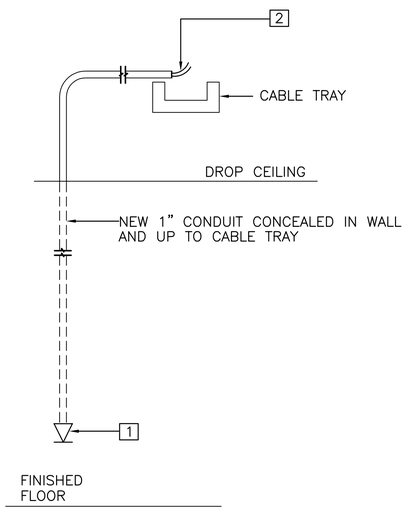

FIBER RISER

NOT TO SCALE

NOTES FIBER RISER:

1. WALL MOUNTED FIBER OUTLET WITH (2) ST TYPE CONNECTORS, AND 1"C WITH FIBER CABLES TO CABLE TRAY. TERMINATE CABLES IN PATCH AS INDICATED IN PLANS. TYPICAL FOR EACH FIBER OUTLET.

2. (1) PAIR 62.5 MULTIMODE FIBER CABLE FOR EACH ST TYPE CONNECTOR TERMINATE IN FIBER PATCH PANELS AS INDICATED IN PLANS.

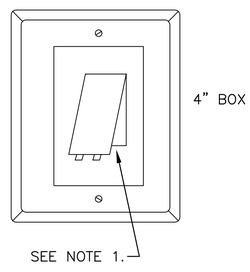

S SL SP JW ISS

WIRED SIPRNET, SCI-LAN, SPAWN, JWICS, AND ISS OUTLET DETAIL (TYPICAL)

NOT TO SCALE

1. TWO FIBER OPTIC ST-TYPE CONNECTORS.

2. "SIPRNET", "SCI-LAN", "SPAWN", "JWICS", OR "ISS" SHALL BE PERMANENTLY MARKED ON PLATE AS IDENTIFIED ON THE COMMUNICATION FLOOR PLAN SYMBOLS.

3. "SIPRNET" JACK COLOR TO BE RED.
"SCI-LAN" OR "ISS" JACK COLOR TO BE YELLOW.
"SPAWN" JACK COLOR TO BE BLUE.
"JWICS" JACK COLOR TO BE ORANGE.

US Army Corps of Engineers
Sacramento District

Symbol	Description	Date	Approved

Designed by: F. LUM
Dwn by:
Spec No.: 1304
Date: 10/21/05
Rev.:
Design File no: 229-25-539
Drawing Code:
Reviewed by: J. PARRISH
Submitted by: Supervisor/Section Chief
File name: N36E-501xxx.dwg
Plot date:
Dwg scale: AS_NOTED
Chief, XXXX Des. Sec.

DEPARTMENT OF THE ARMY
CORPS OF ENGINEERS
SACRAMENTO, CALIFORNIA

SACRAMENTO DISTRICT
IN-HOUSE DESIGN
1325 J STREET
SACRAMENTO, CA 95814-2922

NEVADA

NELLIS AFB

F/A-22 ADD/ALTER WEAPONS SCHOOL

COMMUNICATION DETAILS

Sheet reference number:

E-501

UPDATE

Border Revised 03/01/04, CODSPITZ.DWG

LIGHTING FIXTURE SCHEDULE

FIXTURE SYMBOL	O.C.E. DWG NO. 40-06-04 TYPE	LAMPS TYPE	LAMPS QTY.	LAMPS WATTS	FIXTURE VOLTAGE	MOUNTING	REMARKS
A	RF12	F32T8	3	32	120	RECESSED	PARABOLIC 2x4. SEE DETAIL, THIS SHEET.
Ax	RF12 / XFI	F32T8	3	32	120	RECESSED	SIMILAR TO TYPE A, EXCEPT WITH EMERGENCY BATTERY PACK.
AD	RF12	F32T8	3	32	120	RECESSED	SIMILAR TO TYPE A, EXCEPT WITH DIMMING BALLAST
ADx	RF12 / XFI	F32T8	3	32	120	RECESSED	SIMILAR TO TYPE AD, EXCEPT WITH EMERGENCY BATTERY PACK.
A1	-	F32T8	2	32	120	RECESSED	SIMILAR TO TYPE A, EXCEPT WITH 2 LAMPS AND 12 CELL
A1x	XFI	F32T8	2	32	120	RECESSED	SIMILAR TO TYPE A1, EXCEPT WITH EMERGENCY BATTERY PACK.
B	RF9	F32T8	3	32	120	RECESSED	PRISMATIC LENS. SEE DETAIL, THIS SHEET.
BD	RF9	F32T8	3	32	120	RECESSED	SIMILAR TO TYPE B, EXCEPT WITH DIMMING BALLAST
Bx	RF9 / XFI	F32T8	3	32	120	RECESSED	SIMILAR TO TYPE B, EXCEPT WITH EMERGENCY BATTERY PACK.
C	SF5	F32T8	1	32	120	SURFACE	WRAP-AROUND FLUORESCENT. SEE DETAIL, THIS SHEET.
C1	-	F32T8	2	32	120	SURFACE	SIMILAR TO TYPE C, EXCEPT WITH 2 LAMPS
CX	SF5 / XFI	F32T8	1	32	120	SURFACE	SIMILAR TO TYPE C, EXCEPT WITH EMERGENCY BATTERY PACK.
C1X	-	F32T8	2	32	120	SURFACE	SIMILAR TO TYPE C1, EXCEPT WITH BATTERY PACK.
D	-	F32T8	2	32	120	PENDANT +9' AFF	SEE DETAIL ON SHEET E-503
E	RF3	F26TRT	1	26	120	RECESSED	DOWNLIGHT. SEE DETAIL, THIS SHEET.
ED	RF3	F26TRT	1	26	120	RECESSED	SIMILAR TO TYPE E, EXCEPT WITH DIMMING BALLAST
Ex	RF3 / XFI	F26TRT	1	26	120	RECESSED	SIMILAR TO TYPE E, EXCEPT WITH EMERGENCY BATTERY PACK.
EDx	RF3	F26TRT	1	26	120	RECESSED	SIMILAR TO TYPE ED, EXCEPT WITH EMERGENCY BATTERY PACK.
F	RF3	F26TRT	1	26	120	RECESSED	SIMILAR TO TYPE E, EXCEPT WITH LENS
G	-	F13TT	1	13	120	WALL +9' AFF	SEE DETAIL ON SHEET E-503
H	-	HPS	1	50	120	WALL +15' AFF	SEE DETAIL ON SHEET E-503
I	-	F32T8	2	32	120	SURFACE	SIMILAR TO TYPE J, EXCEPT WITH 2 LAMPS & DIMMING BALLAST
Ix	-	F32T8	2	32	120	SURFACE	SIMILAR TO TYPE I, EXCEPT WITH EMERGENCY BATTERY PACK.
J	-	F32T8	1	32	120	SURFACE	SEE DETAIL ON SHEET E-503
K	-	F32TRT	1	32	120	WALL +9' AFF	SEE DETAIL ON SHEET E-503
X	XL1	LED		UNDER 20	120	CEILING OR WALL	EXIT SIGN. SEE DETAIL, THIS SHEET.

TYPE: RF12

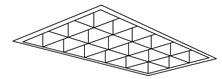

FEATURES
LAMP TYPE: F32T8/82 CRI
PROFILE: 3 LAMP
MOUNTING: RECESSED GRID
SHIELDING: 3" DEEP, 18 CELL SEMI-SPECULAR, SILVER LOW IRIDESCENT PARABOLIC LOUVER
BALLAST: ELECTRONIC

OPTIONS
EMERGENCY: TYPES "Ax" AND "A1x" WITH BATTERY PACK
DIMMING: TYPES "AD" WITH ELECTRONIC DIMMING BALLAST

NOM. DIMENSIONS 24" W X 4' L X 6" D

GENERAL DESCRIPTION
HOUSING: COLD ROLLED STEEL, FLANGE TO COORDINATE WITH CEILING
MOUNTING: RECESSED INTO STANDARD NON METRIC GRID
REFLECTORS: HIGH REFLECTANCE GLOSS WHITE
ELECTRICAL: 120 VOLT BALLAST AS INDICATED
EFFICIENCY: 70%

RECESSED PARABOLIC 2'X4' FLUORESCENT TROFFER

A Ax A1 A1x

TYPE: RF9

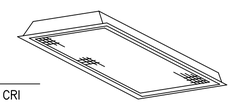

FEATURES
LAMP TYPE: F32T8/82 CRI
PROFILE: 3 LAMP

SHIELDING: ACRYLIC PRISMATIC LENS
BALLAST: ELECTRONIC
EMERGENCY: TYPE "Bx" WITH BATTERY PACK

NOM. DIMENSIONS 24" W X 4' L X 6" D

GENERAL DESCRIPTION
HOUSING: COLD ROLLED STEEL, FLANGE TO COORDINATE WITH CEILING; EXTRUDED ALUMINUM LENS FRAME, HINGED REMOVAL AND SPRING-LOADED CATCHES
MOUNTING: RECESSED INTO STANDARD NON METRIC GRID
REFLECTORS: HIGH REFLECTANCE GLOSS WHITE
ELECTRICAL: 120 VOLT BALLAST
EFFICIENCY: 80% (2-LAMP)

RECESSED LENSED 2'x4' FLUORESCENT TROFFER B

TYPE: XL1

FEATURES
LAMP TYPE: LED
MOUNTING: UNIVERSAL
SHIELDING: FLAT SHEET ACRYLIC
LETTERS: RED

OPTIONS
LETTERS: GREEN
OTHER: BRUSHED ALUMINUM, WHITE AND BRONZE

NOM. DIMENSIONS 11 3/8 " W X 7 7/8 " H X 1 3/4 " D

GENERAL DESCRIPTION
HOUSING: DIE-CAST ALUMINUM OR 20 GA. COLD ROLLED STEEL, HARDWARE FINISH TO MATCH HOUSING FINISH. 6" H LETTERS WITH 3/4" STROKE. DIRECTIONAL ARROWS AS REQUIRED
ELECTRICAL: 120
FINISH: BLACK
OTHER: MINIMUM BRIGHTNESS 20 CD/SQ METER ON FACE OF SIGN.

LED STENCIL FACE EXIT SIGN X

TYPE: RF3

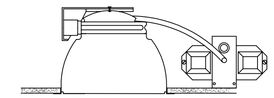

FEATURES
LAMP TYPE: F26TRT
PROFILE: 1 LAMP
BALLAST: ELECTRONIC
EMERGENCY: TYPE "Ex" WITH BATTERY PACK
DIMMING: TYPE "ED" WITH ELECTRONIC DIMMING BALLAST.

NOM. DIMENSIONS 8" DIA. X 6 13/16 " D

GENERAL DESCRIPTION
HOUSING: DIE CAST ALUMINUM WITH UNIVERSAL MOUNTING BRACKETS
REFLECTORS: SEMI-SPECULAR, LOW IRIDESCENT, .05" THICK ALUMINUM REFLECTOR, SELF-FLANGED
LENS: WHITE DIFFUSER
ELECTRICAL: 120 VOLT BALLAST AS INDICATED
EFFICIENCY: 55%

8" DIA. RECESSED COMPACT FLUORESCENT DOWNLIGHT

E ED Ex

TYPE: SF5

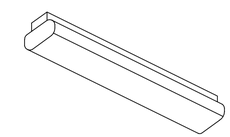

FEATURES
LAMP TYPE: F32T8/75 CRI
PROFILE: 1 LAMP
SHIELDING: PRISMATIC ACRYLIC WRAP LENS
BALLAST: ELECTRONIC

OPTIONS
BALLAST: HIGH POWER FACTOR EMERGENCY

NOM. DIMENSIONS 7" W X 4' L X 4 1/2 " D

GENERAL DESCRIPTION
HOUSING: DIE-FORMED COLD ROLLED STEEL
MOUNTING: FIXTURE IS LONGER THAN METRIC GRID
REFLECTORS: GLOSS WHITE INTERIOR FINISH
ELECTRICAL: 120 VOLT BALLAST
FINISH: WHITE ENAMEL OR POLYESTER POWDER COAT

SURFACE MOUNTED WRAPAROUND

C Cx C1 C1x

US Army Corps of Engineers
Sacramento District

Symbol	Description	Date	Approved

Designed by: F. LUM
Dwn by: J. FRESCAS
Spec No: 1304
Date: 10/21/05
Rev.
Design File no: 229-25-539
Drawing Code:
Reviewed by: J. PARRISH
Submitted by: Jeff Sellers
Chief, Tech/Clric. Svc. Sec.
File name: N39E-S60cover.dwg
Plot date:
Dwg scale: AS_NOTED

DEPARTMENT OF THE ARMY
CORPS OF ENGINEERS
SACRAMENTO, CALIFORNIA

SACRAMENTO DISTRICT
IN-HOUSE DESIGN
1325 J STREET
SACRAMENTO, CA 95814-2922

NEVADA
NELLIS AFB
F/A-22 ADD/ALTER WEAPONS SCHOOL

LIGHTING FIXTURE SCHEDULE AND LIGHT FIXTURE DETAILS

Sheet reference number:
E-502

UPDATE

Border Revised 03/01/04, CEGN12EWG

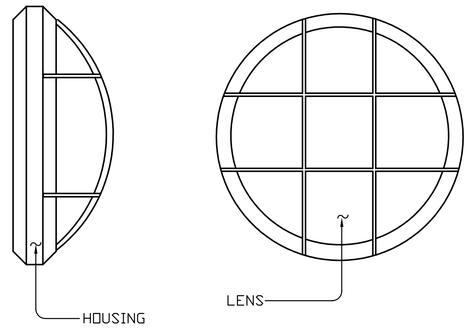

NOTES:

1. FIXTURE HOUSING AND PROTECTIVE CASING SHALL BE OF ABS POLYCARBONATE WITH A FINISH OF BLACK
2. LENS SHALL BE POLYCARBONATE TRANSLUCENT WHITE UV STABILIZED.
3. ANODIZED ALUMINUM REFLECTOR AND PORCELAIN LAMPHOLDER.
4. MOULDED GASKET AND UL LISTED FOR WET LOCATIONS.
5. STAINLESS STEEL SCREWS.
6. ONE 13 WATT TWIN-TUBE FLOURESCENT LAMP WARM WHITE IN COLOR.
7. BALLAST - 120 V, ELECTRONIC HIGH POWER ACTOR, STARTING TEMPERATURE -5 DEGREE F.

EXTERIOR WALL SCONCE (G)

NOT TO SCALE

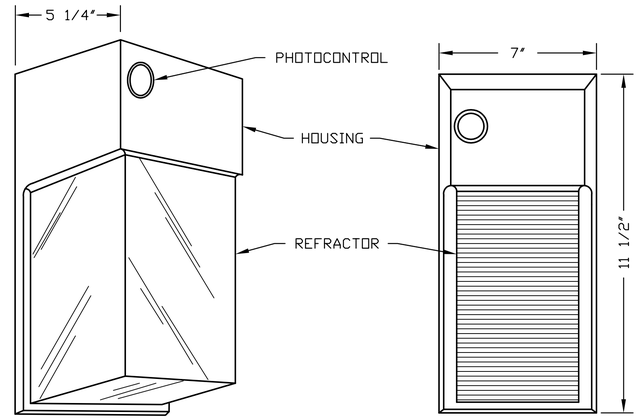

1. ONE-PIECE, INJECTION MOLDED BRONZE POLYCARBONATE HOUSING.
2. PRISMATIC POLYCARBONATE REFRACTOR.
3. HIGH PRESSURE SODIUM CLASS "H" HIGH POWER FACTOR REACTOR BALLAST, -40 DEGREES F STARTING, 120 VOLT.
4. CLEAR HIGH PRESSURE SODIUM LAMP, 50 WATT MEDIUM BASE. MAX. STARTING CURRENT IS 0.90 AMPS
5. VANDAL RESISTANT SCREW RETAINS REFRACTOR AND PREVENTS ACCESS TO LAMP AND FIXTURE MOUNTING SCREWS.
6. ALL WEATHER GASKETING, UL LISTED, SUITABLE FOR WET LOCATIONS.
7. INTEGRAL 120 VOLT PHOTOCONTROL.

FIXTURE (H)

NOT TO SCALE

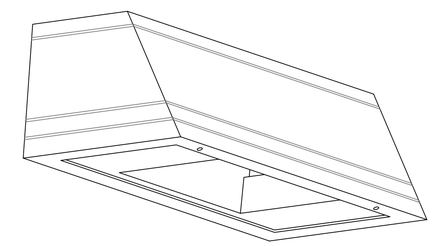

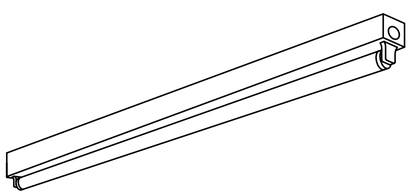

BALLAST

THERMALLY PROTECTED, RESETTING, CLASS P HPF BALLAST STANDARD. SOUND RATING A, CBM APPROVED IN STANDARD COMBINATIONS, UL LISTED.

WIRING & ELECTRICAL

AWM, TFN OR THHN WIRE USED THROUGHOUT, RATED FOR REQUIRED TEMPERATURES. CHANNEL HAS MULTIPLE KNOCKOUTS FOR CONVENIENT INSTALLATION.

MATERIALS

CHANNEL AND CHANNEL COVER DIE-FORMED FROM CODE GAUGE STEEL.

FINISH

FIVE STAGE, IRON PHOSPHATE PRE-TREATMENT ENSURES SUPERIOR PAINT ADHESION AND RUST RESISTANCE. HIGH GLOSS, BAKED WHITE ENAMEL FINISH.

FLUORESCENT STRIP (J)

NOT TO SCALE

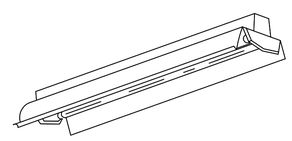

LUMINAIRE REQUIREMENTS

1. HOUSING SHALL BE 0.032" MINIMUM THICKNESS DIE FORMED COLD ROLLED STEEL, CHEMICALLY TREATED FOR RUST PREVENTION AND FINISHED WITH WHITE BAKED ENAMEL OR POLYESTER FINISH. PROVIDE TOP AND END KNOCKOUTS.
2. HOUSING WELDED OR SECURED BY SCREWS OR RIVETS INTO A SINGLE ASSEMBLY. PROVIDE INTERNAL PROVISIONS FOR GROUNDING.
3. REFLECTOR SHALL BE 0.026" MINIMUM THICKNESS STEEL (SOLID WHEN LUMINAIRE IS MOUNTED BELOW CATWALKS, ETC. 10-25% APERTURED WHEN PROTECTED FROM FALLING OBJECTS). PROVIDE 30 SHIELDING CENTER VEE. CHEMICALLY TREAT FOR RUST PREVENTION AND FINISH WITH WHITE BAKED ENAMEL, PORCELAIN ENAMEL, OR POLYESTER FINISH. MINIMUM REFLECTANCE SHALL BE 85%.
4. THE LUMINAIRE SHALL NOT PERMANENTLY DISTORT WHEN LIFTED BY ONE CORNER.
5. LUMINAIRE SHALL BE CAPABLE OF CONTINUOUS ROW AND SINGLE UNIT PLACEMENT WITH PENDANT OR SURFACE MOUNTING.
6. PROVIDE SPRING LOADED PLUNGER TYPE LAMP SOCKETS.
7. BALLAST SHALL BE HIGH POWER FACTOR (>_.9) ETL, CBM APPROVED CLASS P ENERGY SAVING BALLAST WITH A SOUND RATING OF B (RAPID START OR SLIMLINE).

INDUSTRIAL FLUORESCENT (D)

N.T.S.

CONSTRUCTION

RUGGED, DIE-CAST, SINGLE-PIECE ALUMINUM HOUSING. DIE-CAST DOOR FRAME HAS A 1/8" THICK TEMPERED GLASS LENS. DOOR FRAME IS FULLY GASKETED WITH ONE-PIECE SOLID SILICONE.

FINISH

STANDARD FINISH IS TEXTURED DARK BRONZE CORROSION-RESISTANT POLYESTER POWDER FINISH.

OPTICAL SYSTEM

SEGMENTED REFLECTORS FOR SUPERIOR UNIFORMITY AND CONTROL. MEDIUM THROW FULL CUTOFF DISTRIBUTION.

ELECTRICAL SYSTEM

FLUORESCENT BALLAST IS CLASS P, ELECTRONIC, HIGH POWER FACTOR, <10%THD, WITH STARTING TEMPERATURE OF 0°dF. FLUORESCENT SOCKET IS HIGH TEMPERATURE THERMOPLASTIC WITH AN INTEGRAL LAMP RETENTION CLIP.

LISTING

UL LISTED (STANDARD). SUITABLE FOR WET LOCATIONS.

OUTDOOR COMPACT FLUORESCENT (K)

N.T.S.

US Army Corps of Engineers
Sacramento District

Symbol	Description	Date	Approved

Designed by: F. LUM
Dwn by: J. FRESCAS
Reviewed by: J. PARRISH
Submitted by: Chief, Section Chief
Date: 10/21/05
Design File no: 229-25-539
Spec No: 1304
Drawing Code:
Rev.
File name: N39E-S03xxx.dwg
Plot date:
Dwg scale: AS_NOTED

DEPARTMENT OF THE ARMY
CORPS OF ENGINEERS
SACRAMENTO, CALIFORNIA

SACRAMENTO DISTRICT
IN-HOUSE DESIGN
1325 J STREET
SACRAMENTO, CA 95814-2922

NEVADA

NELLIS AFB

F/A-22 ADD/ALTER WEAPONS SCHOOL

LIGHTING FIXTURE DETAILS

Sheet reference number:
E-503

UPDATE

Border: Revised 03/01/04, CCSN1B2.DWG

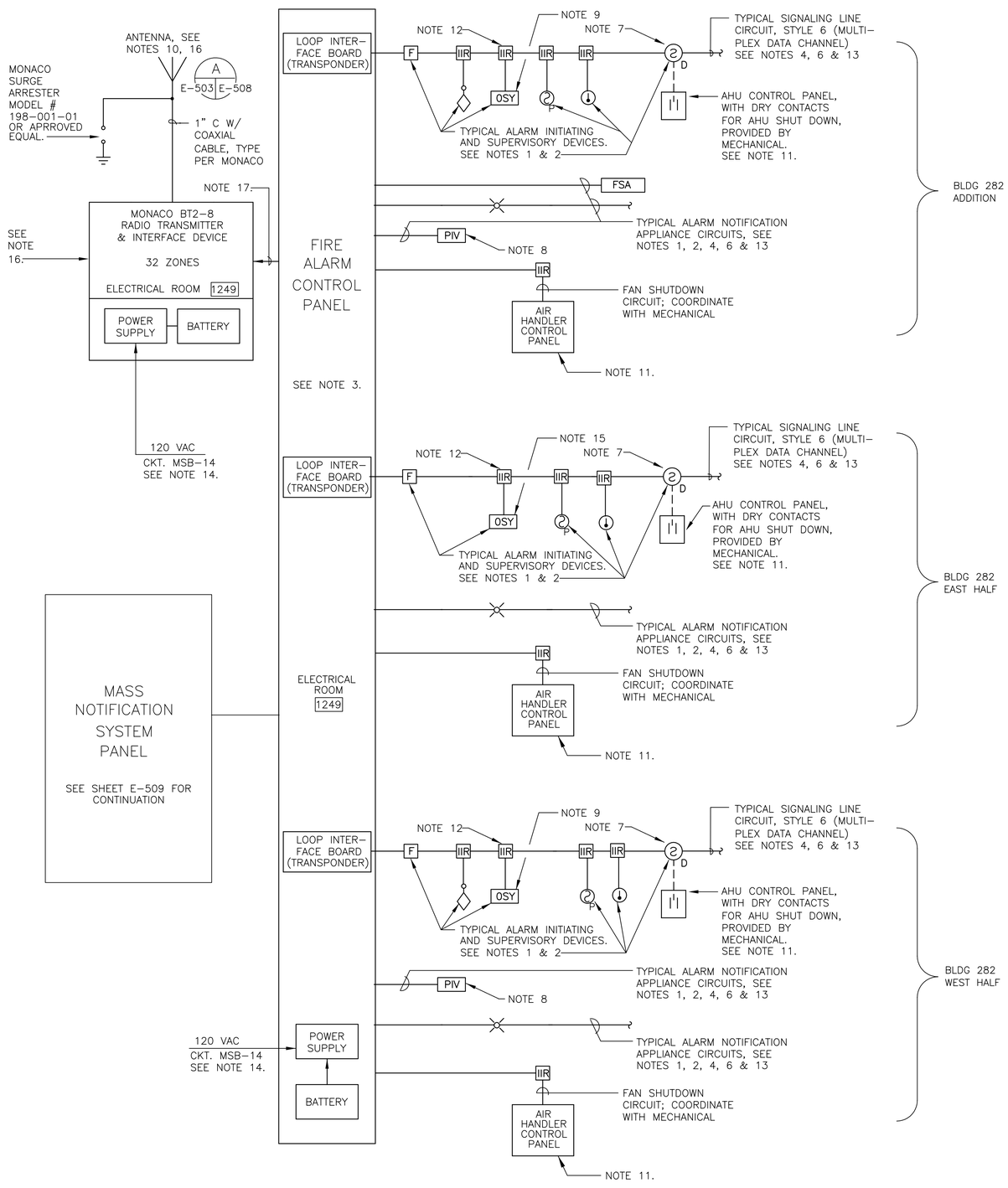

FIRE ALARM SYSTEM DIAGRAM

NOT TO SCALE

FIRE ALARM TRANSMITTER ZONE SCHEDULE			
ZONE NO.	ZONE NAME		
1	RSA RELAY TEST	(ALARM)	ALL BLDG 282
2	GENERAL ALARM/GENERAL TROUBLE	(ALARM/TROUBLE)	
3	* GENERAL SUPERVISORY	(SUPERVISORY)	
4	ALL MANUAL PULL STATIONS	(ALARM)	BLDG 282 ADDITION
5	WATER FLOW SWITCH – WET PIPE	(ALARM)	
6	HEAT DETECTORS FOR ELEVATOR POWER SHUT DOWM	(ALARM)	
7	LOBBY SMOKE DETECTORS FOR ELEVATOR RECALL	(ALARM)	
8	DUCT SMOKE DETECTORS	(ALARM)	
9	HEAT DETECTORS FOR ELEC. AND MECH. ROOMS	(ALARM)	
10	COMM ROOMS SMOKE DETECTORS	(ALARM)	
11	ALL MANUAL PULL STATIONS	(ALARM)	BLDG 282 EAST HALF
12	DUCT SMOKE DETECTORS	(ALARM)	
13	HEAT DETECTORS FOR ELEC. AND MECH. ROOMS	(ALARM)	
14	COMM ROOMS SMOKE DETECTORS	(ALARM)	
15	ALL MANUAL PULL STATIONS	(ALARM)	BLDG 282 WEST HALF
16	WATER FLOW SWITCH – WET PIPE	(ALARM)	
17	DUCT SMOKE DETECTORS	(ALARM)	
18	HEAT DETECTORS FOR ELEC. AND MECH. ROOMS	(ALARM)	
19	COMM ROOMS SMOKE DETECTORS	(ALARM)	
20–32	SPARE	(ALARM)	

* GENERAL SUPERVISORY DEVICES:

1. TAMPER SWITCH/ CONTROL VALVE, WET PIPE
2. TAMPER SWITCH/ CONTROL VALVE, BACKFLOW PREVENTER
3. POST INDICATOR VALVE SWITCH

GENERAL NOTES:

1. DURING PHASE II INSTALLATION THE FIRE ALARM PANEL SHALL BE PROVIDED WITH THE CAPACITY FOR ADDING THE EAST PORTION AND WEST PORTION OF THE EXISTING BUILDING 282 NEW DEVICES. THE ACTUALL CONNECTION OF THE DEVICES SHALL BE DURING THE PHASE WHICH IT IS ASSIGNATED TO. SEE PHASE ASSIGNMENT ON SHEET A–101.
2. EXISTING FIRE ALARM CONTROL PANEL, ANNUNICATOR PANEL AND DEVICES SHALL BE IN OPERATON UNTIL REPLACED BY THE NEW FIRE ALARM CONTROL PANEL AND NEW DEVICES ARE IN OPERATION, THEN REMOVE THE EXISTING FIRE ALARM DEVICES, FIRE ALARM CONTROL PANEL AND ANNUNICATOR PANEL.

FIRE ALARM SYSTEM DIAGRAM NOTES:

1. FOR SYMBOL LEGEND, SEE SHEET E–001.
2. THE NUMBER AND LOCATION OF DEVICES ARE SHOWN ON SHEETS T–120 THROUGH T–126.
3. THE FIRE ALARM CONTROL PANEL SHALL BE A MICROPROCESSOR–BASED, MULTIPLEX TYPE. ALL ALARM INITIATING DEVICES (MANUAL PULL STATIONS, HEAT DETECTORS, SMOKE DETECTORS, AND WATERFLOW SWITCHES) SHALL BE INDIVIDUALLY IDENTIFIED AND MONITORED (ADDRESSABLE) BY THE FACP.
4. THE NUMBER OF SIGNALING LINE CIRCUITS AND ALARM NOTIFICATION APPLIANCE CIRCUITS SHALL BE DETERMINED BY THE MANUFACTURERS LIMIT OF DEVICES PER CIRCUIT. PROVIDE 20% SPARE CAPACITY FOR FUTURE REVISIONS.
5. IF LOOP INTERFACE BOARDS OR OTHER REQUIRED DATA COMMUNICATION DEVICES (TRANS–PONDERS) ARE LOCATED REMOTE FROM THE FACP, THE CONTRACTOR SHALL PROVIDE BATTERIES AND CHARGER.
6. MULTIPLEX DATA CHANNEL SHALL BE MINIMUM #16 AWG TWISTED SHIELDED PAIR IN 1/2" CONDUIT. OTHER CONDUCTORS SHALL BE PER MANUFACTURERS RECOMMENDATIONS. IN ADMINISTRATIVE AREAS ALL CONDUITS SHALL BE PROVIDED CONCEALED, EITHER ABOVE CEILINGS OR IN WALLS.
7. DUCT SMOKE DETECTORS COORDINATE LOCATION WITH MECHANICAL.
8. SEE CIVIL SITE PLAN FOR LOCATION OF PIV.
9. COORDINATE OS&Y VALVE TAMPER SWITCH LOCATIONS WITH MECHANICAL.
10. MOUNT FIRE ALARM ANTENNA ON SOUTH SIDE OF BUILDING. SEE SHEET T–126 FOR LOCATION.
11. THIS PANEL MAY ACTUALLY BE THE "DDC" CONTROL PANEL. COORDINATE WITH MECHANICAL. FACP SHALL HAVE A KEY OPERATED SWITCH TO SEPARATELY OVERRIDE SHUTDOWN FOR THE DEVICE INDICATED.
12. INTELLIGENT INTERFACE RELAY MODULES SHALL MONITOR A SINGLE NORMALLY OPEN OR NORMALLY CLOSED DRY CONTACT. THE INTERFACE MODULE SHALL REPORT THE CONTACT'S STATUS TO THE CONTROL PANEL. THE MODULE SHALL INCORPORATE AN ADDRESSABLE RELAY WITH CONTACTS RATED 2 AMPS, 125 VAC INDUCTIVE OR 2 AMPS, 30 VDC RESISTIVE. IT SHALL ALSO INCORPORATE A SUPERVISED SWITCH TO MONITOR THE STATUS OF AUXILIARY EQUIPMENT. THE SUPERVISORY SWITCH MUST BE HELD CLOSED AND/OR OPEN FOR AT LEAST 1/4 SECOND IN ORDER TO GUARANTEE DETECTION. THE RELAY MODULE SHALL BE REMOTELY MOUNTED ON A DOUBLE GANG SWITCHBOX. THESE RELAYS SHALL BE USED TO CONTROL THE ACTIVATION OF THE SHUNT–TRIP COILS IN POWER PANEL CIRCUIT BREAKERS.
13. PROVIDE A RETURN CIRCUIT TO FACP.
14. ALL BRANCH CIRCUIT BREAKERS SUPPLYING POWER TO FIRE ALARM EQUIPMENT SHALL BE EASILY ACCESSIBLE, LOCKABLE AND PAINTED RED.
15. COORDINATE OS&Y VALVE TAMPER SWITCH LOCATIONS MECHANICAL IN THE LOBBY AREA, FOR BIDDING ESTIMATED #20 OR LESS.
16. THE BASE FIRE DEPARTMENT UTILIZES TRANSCEIVERS MANUFACTURED BY MONACO. THE CONTRACTOR SHALL PROVIDE A MONACO MODEL BT2–8 TRANSCIEVER AND MATCHING ANTENNA AS SHOWN, OR 100% EQUAL AND COMPATIBLE WITH THE EXISTING MONACO D750 SYSTEM PRESENTLY USED BY THE BASE FIRE DEPARTMENT. "100% EQUAL AND COMPATIBLE" EQUIPMENT SHALL BE APPROVED THROUGH THE CONTRACTING OFFICER.
17. CABLE TYPE SHALL BE PER TRANSCIEVER AND FIRE ALARM PANEL MANUFACTURERS' RECOMMENDATIONS, IN MINIMUM 1" C.

US Army Corps of Engineers
Sacramento District

Symbol	Description	Date	Approved

Designed by: F. LUM
Date: 10/21/05
Rev.
Dwn by: J. F.
Spec. No.: 1304
Design File no.: 229–25–539
Drawing Code:
Reviewed by:
Submitted by: F/J Section Chief
File name: N39E–504xxx.dwg
Plot date:
Plot scale: AS_NOTED

DEPARTMENT OF THE ARMY
CORPS OF ENGINEERS
SACRAMENTO, CALIFORNIA

SACRAMENTO DISTRICT
IN–HOUSE DESIGN
1325 J STREET
SACRAMENTO, CA 95814–2922

NEVADA
NELLIS AFB
F/A–22 ADD/ALTER WEAPONS SCHOOL

FIRE ALARM SYSTEM DIAGRAM AND DETAILS

Sheet reference number:
E–504

UPDATE

Border Revised 03/01/04, CCD3410D2.DWG

KEYED NOTES: D

1. ALL DUCT SHALL HAVE A MINIMUM 4" SEPARATION BETWEEN THEM, AND SHALL BE 3" MAX FROM WALL.
2. PUNCH DOWN ALL INSIDE WIRING AND OUTSIDE WIRING CABLES TO THE TERMINAL BLOCKS AND PATCH PANELS. DISTINCTIVELY IDENTIFY EACH CABLE FOR FUNCTION.
3. (1) CABLE TV CABLE HOMERUN (DEDICATED) TO EACH CABLE TV OUTLET. (1) CABLE TV CABLE (BACKBONE) TO COMMUNICATIONS ROOM: 2233
4. #6 COPPER GREEN GROUND WIRE (INSULATED).
5. CABLE TV OUTLET – SEE POWER AND SIGNAL PLAN FOR NUMBER AND LOCATION. PROVIDE REQUIRED NUMBER OF DEDICATED 3/4" CONDUITS EACH WITH (1) CABLE TV CABLE TERMINATED ON AN F–SERIES JACK AT EACH CABLE TV OUTLET.
6. POWER BRANCH CIRCUIT CONDUIT SECURED TO CABINET. ROUTE TO OUTLET AT ADJACENT WALL VIA CABLE TRAY ABOVE. INSTALL PER NEC.
7. PROVIDE # AS REQUIRED OF INDICATED EQUIPMENT, TO TERMINATE ALL WIRING.
8. 200 PAIR COPPER VOICE CABLES TO COMMUNICATIONS ROOM 2233 AND
9. 100 PAIR COPPER VOICE TO COMMUNICATIONS ROOM 2217.
10. 6 STRAND MULTIMODE FIBER CABLE TO COMMUNICATIONS ROOM 2233 AND
11. 6 STRAND MULTIMODE FIBER CABLE TO COMMUNICATIONS ROOM 2217 AND
12. 6 STRAND MULTIMODE FIBER CABLE TO COMMUNICATIONS ROOM 1118.
13. CABLE TV CABLE TO COMMUNICATIONS ROOM 2233.

GENERAL NOTES:

1. INSTALL ALL BLOCKS ON THE TTB A MINIMUM OF 36" A.F.F., A MINIMUM OF 6" FROM THE TTB SIDE EDGE, AND NO HIGHER THAN 66" A.F.F.
2. PROVIDE OFFSET BRACKETS AS REQUIRED ON TTB FOR SUPPORT AND ORGANIZATION OF ALL LOOSE CABLING.
3. PROVIDE PULL CORD IN ALL EMPTY DUCTS AND INNERDUCTS.
4. SEE POWER AND SIGNAL PLANS FOR QUANTITY AND LOCATION OF COMMUNICATIONS OUTLETS.
5. PROVIDE FIRE STOPPING MATERIAL AT ALL FIRE–RATED BOUNDARIES.
6. MAINTAIN SEPARATION REQUIREMENTS BETWEEN COMMUNICATIONS AND OTHER CABLES 3' MINIMUM SEPARATION WHERE PARALLEL FOR 5' OR MORE. WHERE POWER AND COMMUNICATIONS CABLES ARE PARALLEL FOR LESS THAN 5', THE MINIMUM SEPARATION MAY BE REDUCED TO 12".
7. IAW NATIONAL ELECTRICAL CODE TERMINATE ALL OUTSIDE COPPER CABLE ON PROTECTED TERMINAL BLOCKS OF THE TYPE APPROVE OR EQUAL TO MANUFACTURER ITW LINX, PART NUMBER FPP5075, WHICH HAS A VOLTAGE OF 35.1V TO 60.0V.
8. ALL FIBER OPTIC CABLES SHALL TERMINATE ON THE FIBER PATCH PANELS.
9. SEE SHEET E–508 FOR GENERAL RACK LAYOUT CONFIGURATION. PROVIDE THE NUMBERS AND TYPE OF PATCH PANELS AS INDICATED ON PLANS.

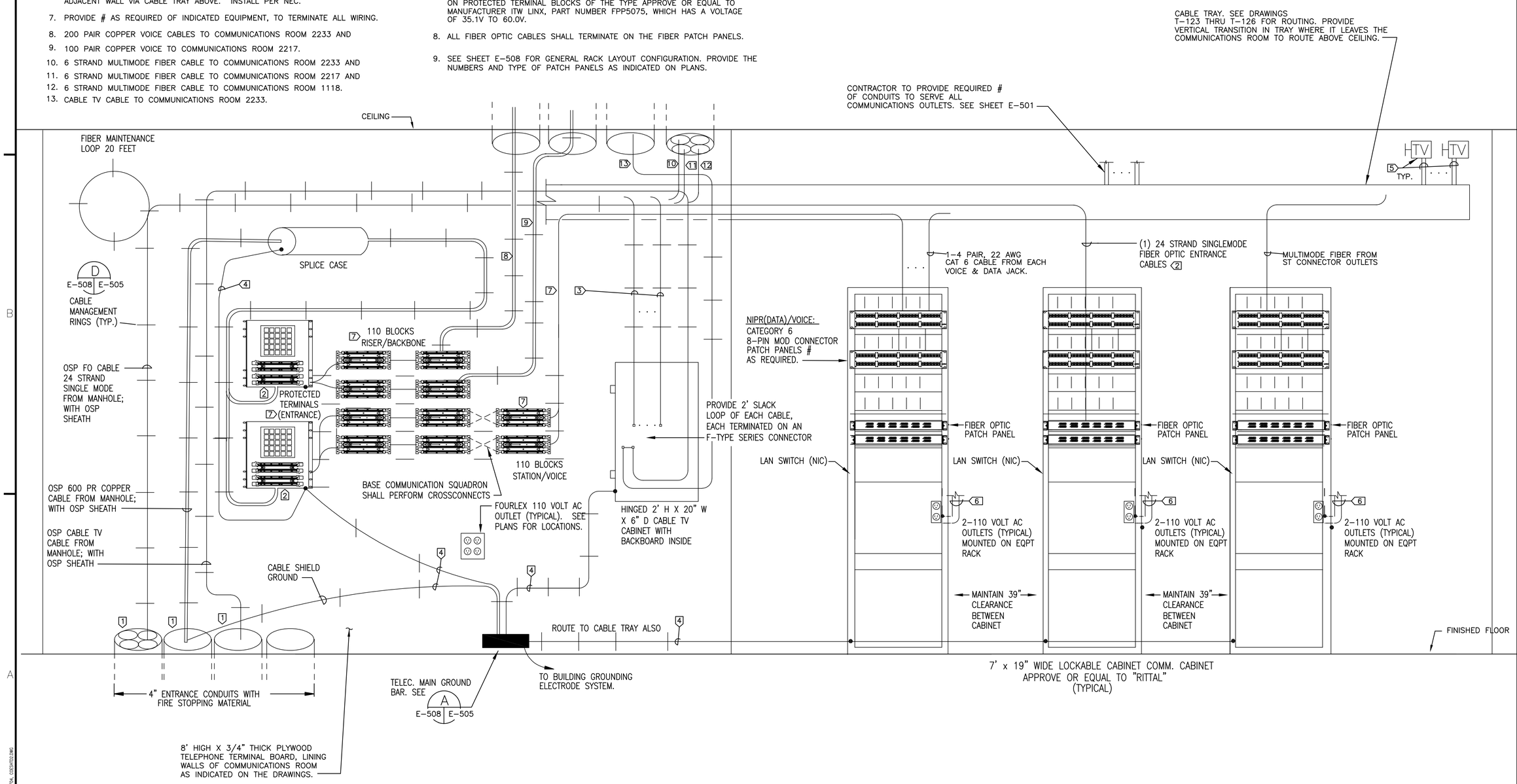

TTB LAYOUT – COMMUNICATIONS ROOM – 1250

NOT TO SCALE

US Army Corps of Engineers
Sacramento District

Symbol	Description	Date	Approved

Designed by: F. LUM
Dwn by: J. F.
Spec No.: 1304
Reviewed by:
Submitted by: F/A Section Chief
Date: 10/21/05
Design File no: 229–25–539
Drawing Code:
Rev.
File name: N3NE–505xxx.dwg
Plot date:
Dwg scale: AS_NOTED

DEPARTMENT OF THE ARMY
CORPS OF ENGINEERS
SACRAMENTO, CALIFORNIA

SACRAMENTO DISTRICT
IN–HOUSE DESIGN
1325 "J" STREET
SACRAMENTO, CA 95814–2922

NEVADA
NELLIS AFB
F/A–22 ADD/ALTER WEAPONS SCHOOL

COMMUNICATIONS SYSTEM DIAGRAMS AND DETAILS – I

Sheet reference number:
E–505

UPDATE

Border Revised 03/01/04, 0C53/0T02.DWG

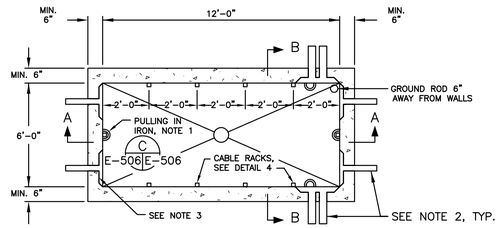

MANHOLE PLAN

NOT TO SCALE

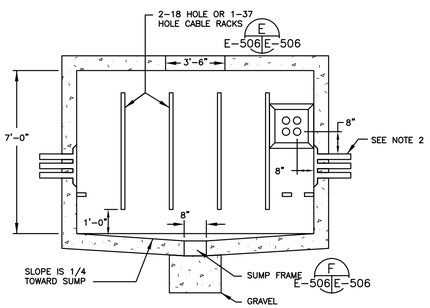

SECTION A–A

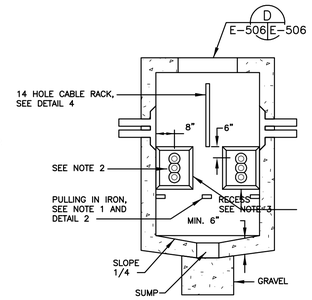

SECTION B–B

COMMUNICATION MANHOLE

NOT TO SCALE

7
T-128 E-506

CONSTRUCTION REQUIREMENTS FOR MANHOLES				
CLEAR MINIMUM INSIDE DIMENSIONS FOR INSTALLATION AND MAINTENANCE PURPOSES				
MANHOLE	HEIGHT	LENGTH	WIDTH	SUMP DEPTH
POWER	6'–0"	6'–0"	4'–6"	1'–0"
TELEPHONE	7'–0"	12'–0"	6'–0"	1'–0"
MINIMUM CONCRETE THICKNESS				
MANHOLE	MANHOLE WALLS, TOP, AND FLOOR		SUMP WALLS AND FLOOR	
POWER	8"		4"	
TELEPHONE	6"		4"	
MINIMUM REINFORCING				

1. BARS WILL BE A MINIMUM OF NO. 4 ROUND DEFORMED.
2. WALLS AND FLOOR WILL HAVE BARS AT 203mm MINIMUM ON CENTER WITH A MINIMUM .3m HOOK AT CORNERS AND INTERSECTION.
3. THE TOP WILL HAVE BARS INSTALLED AS SHOWN AT 102mm ON CENTER MINIMUM LATERALLY AND LONGITUDINALLY AS APPROPRIATE, EXCEPT THAT AT OPENINGS ALSO PROVIDE AN ADDITIONAL BAR AT A 51mm SPACING AND TWO DIAGONAL BARS, EACH WAY AT 45° TO EACH OTHER AND LOCATED ABOVE LATERAL OR LONGITUDINAL BARS.
4. REINFORCING SHALL BE INCREASED WHERE REQUIRED TO SUIT ACTUAL INSTALLATION.

MANHOLE NOTES:

1. INSTALL ONE (1) PULLING IRON IN EACH HANDHOLE WALL THAT IS OPPOSITE A DUCT ENTRANCE. POSITION THE IRONS 6" TO 1'–0" BELOW THE DUCT ENTRANCE.
2. DUCTS SHALL ENTER END WALL OF MANHOLES AS NEAR AS POSSIBLE EQUIDISTANT FROM FLOOR AND ROOF UNLESS CLEARING EXISTING UTILITIES REQUIRES ENTERING END WALLS CLOSER TO FLOOR OR ROOF OF MANHOLES. EXACT NUMBER AND LOCATION OF DUCTS SHALL BE AS SHOWN ON PLANS.
3. IF BELL–END TYPE DUCTS ARE USED, RECESS IS NOT REQUIRED.
4. INSTALL MANHOLES WITH LONG WALL PARALLEL TO MAIN DUCT RUN.
5. ALL MANHOLES SHALL BE TRAFFIC TYPE.
6. THE MANHOLE COVERS SHALL HAVE THE WORDS "ELECTRIC" OR "TELEPHONE" IN 3" HIGH LETTERS & AS RECOMMENDED BY MANUFACTURER.

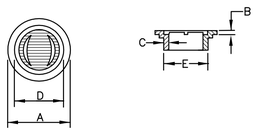

SUMP FRAME AND COVER

NOT TO SCALE

F
E-506 E-506

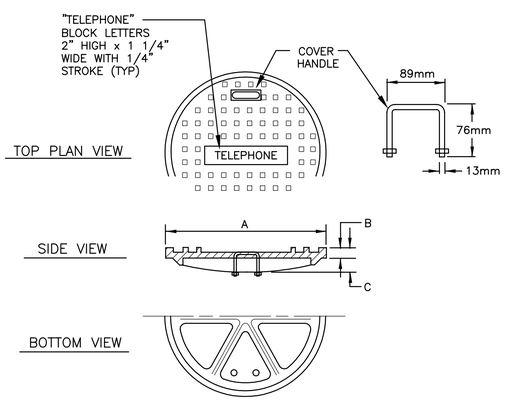

MANHOLE APPURTENANCE	FED. SPEC. RR–F–621 CLASSIFICATION				DIMENSIONS MILLIMETERS						REMARKS
	TYPE	STYLE	SIZE	NOMINAL	A	B	C	D	E	F	
MANHOLE FRAME	III	A	36A	36	3'–2"	1 3/8"	3'–0"	3'–11"	4"	10"	SEE NOTE 5
MANHOLE COVER	D	–	a	36	3'–1"	1 3/8"	2 11/16"	–	–	–	SEE NOTE 5
SUMP FRAME	VII	–	–	12	1'–3"	1/2"	1'–0"	1'–1"	3/8"	–	b
SUMP COVER	I	–	–	12	–	1/2"	–	1'–1"	–	–	b

[a] MODIFIED TO SUIT A 36–INCH FRAME.
[b] CIRCULAR INSTEAD OF SQUARE SHAPED.

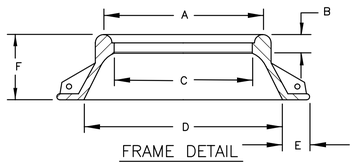

MANHOLE FRAME AND COVER DETAIL

NOT TO SCALE

D
E-506 E-506

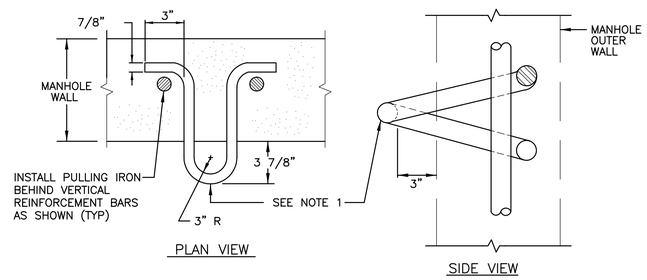

PULLING IRON DETAIL

NOT TO SCALE

C
E-506 E-506

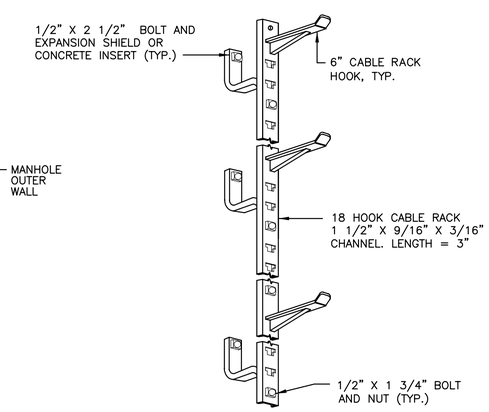

CABLE RACK DETAIL

NOT TO SCALE

E
E-506 E-506

US Army Corps of Engineers
Sacramento District

Symbol	Description	Date	Approved

Designed by: F. LUM	Date: 10/21/05	Rev.	
Dwn by: J. F.	Spec No.: 1304	Design File no: 229–25–539	
Reviewed by:		Drawing Code:	
Submitted by: F.A. Section Chief		File name: N36E–506xxx.dwg	
Chief, Mech/Elec. Sec.		Plot date:	
		Dwg scale: AS_NOTED	

DEPARTMENT OF THE ARMY
CORPS OF ENGINEERS
SACRAMENTO, CALIFORNIA

SACRAMENTO DISTRICT
IN–HOUSE DESIGN
1325 "J" STREET
SACRAMENTO, CA 95814–2922

NEVADA

NELLIS AFB

F/A–22 ADD/ALTER WEAPONS SCHOOL

MANHOLE DETAILS

Sheet reference number:
E–506

UPDATE

Binder Revised 03/01/04, 02S3R02.DWG

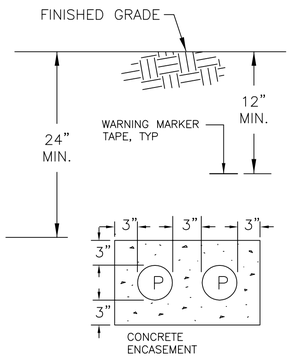

NOTE: YELLOW PLASTIC LOCATING TAPE OVER PRIMARY DUCT LINES SHALL BEAR THE WORDS "DANGER–BURIED HIGH VOLTAGE CABLE".

2–WAY DETAIL (2)

NOT TO SCALE — E–121E–507

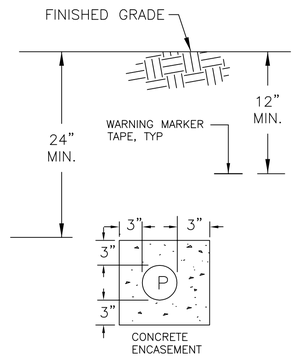

NOTE: YELLOW PLASTIC LOCATING TAPE OVER PRIMARY DUCT LINES SHALL BEAR THE WORDS "DANGER–BURIED HIGH VOLTAGE CABLE".

2–WAY DETAIL (3)

NOT TO SCALE — E–121E–507

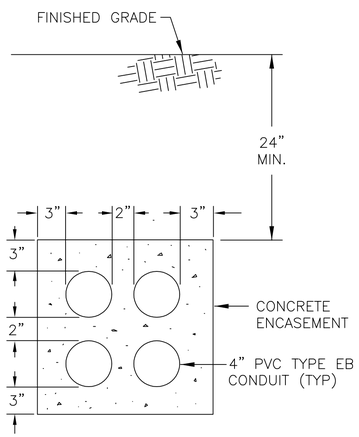

4–WAY COMMUNICATION DUCTBANK (4)

NOT TO SCALE — T–128E–507

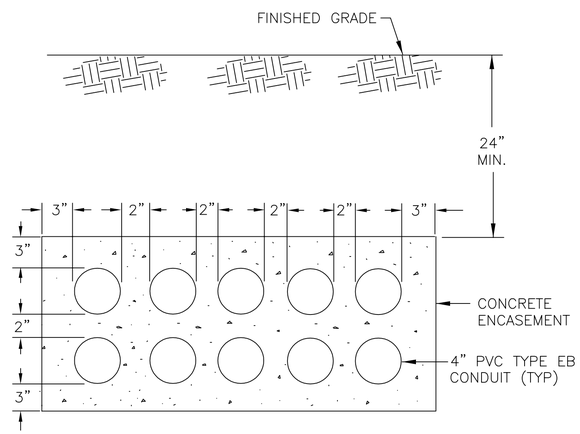

COMMUNICATION DUCTBANK (5)

NOT TO SCALE — T–128E–507

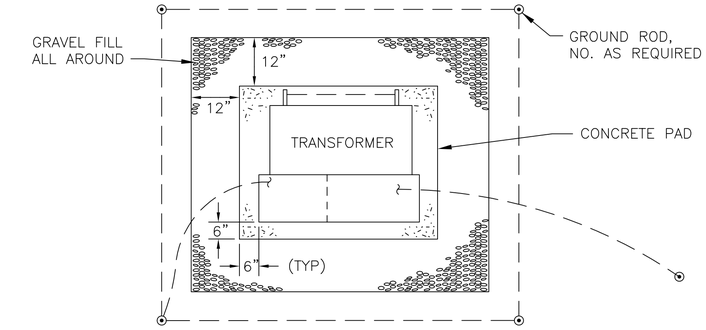

PLAN

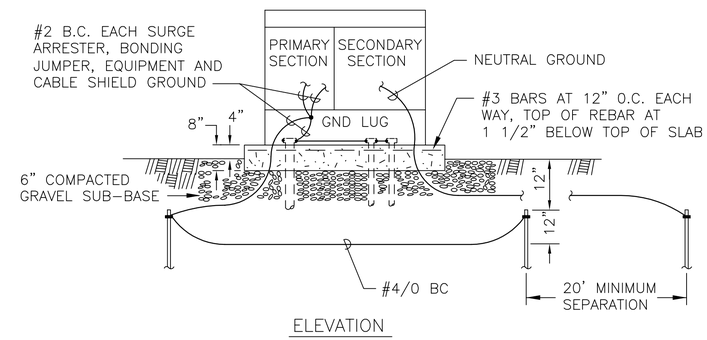

ELEVATION

PAD MOUNTED TRANSFORMER (1)

NOT TO SCALE — E–121E–507

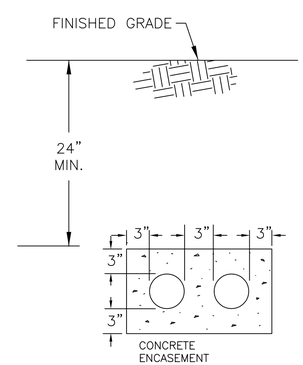

2–WAY COMMUNICATION DUCTBANK (6)

NOT TO SCALE — T–128E–507

US Army Corps of Engineers
Sacramento District

Symbol	Description	Date	Approved

Rev.	Date	File name: N30E–507xx.dwg
	10/21/05	Plot date:
	Design File no: 229–25–539	Plot scale: AS_NOTED
	Drawing Code:	

Designed by: F. LUM
Dwn by: J. F.
Spec. No.: 1304
Reviewed by:
Submitted by: /S/ Section Chief
Chief, Mech. Des. Sec.

DEPARTMENT OF THE ARMY
CORPS OF ENGINEERS
SACRAMENTO, CALIFORNIA

SACRAMENTO DISTRICT
IN–HOUSE DESIGN
1325 "J" STREET
SACRAMENTO, CA 95814–2922

NEVADA
NELLIS AFB
F/A–22 ADD/ALTER WEAPONS SCHOOL
TRANSFORMER DETAILS

Sheet reference number:
E–507

UPDATE

Border Revised 03/01/04, 02/03/02.DWG

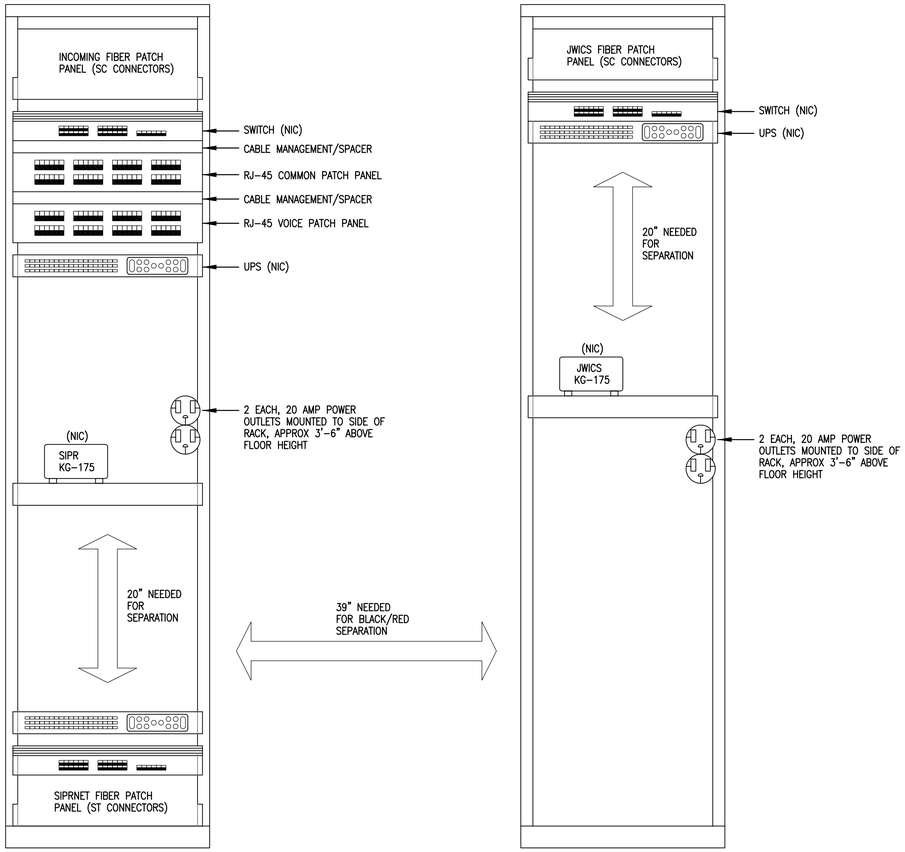

RACK ELEVATION DRAWINGS

NIPRNET/SIPRNET RACK

NO SCALE

JWICS OR ANY CLASSIFIED PATCH PANEL RACK

NO SCALE

NOTE:
RACKS ARE SHOWN FOR GENERAL LOCATION CLEARANCE OF PATCH PANELS AND OUTLET MOUNTING. ACTUAL NUMBERS OF PATCH PANEL AND TYPE SHALL BE AS INDICATED ON PLANS.

CABLE MANAGEMENT RING (TYPICAL FOR PLYWOOD BACKBOARD)

NOT TO SCALE

D
E-505 | E-508

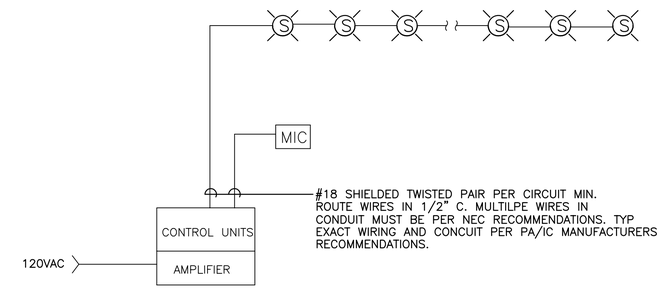

PA RISER DIAGRAM

NO SCALE

NOTE: SEE ACTURAL NUMBER OF SPEAKER ON SHEETS T-123 AND T-124.

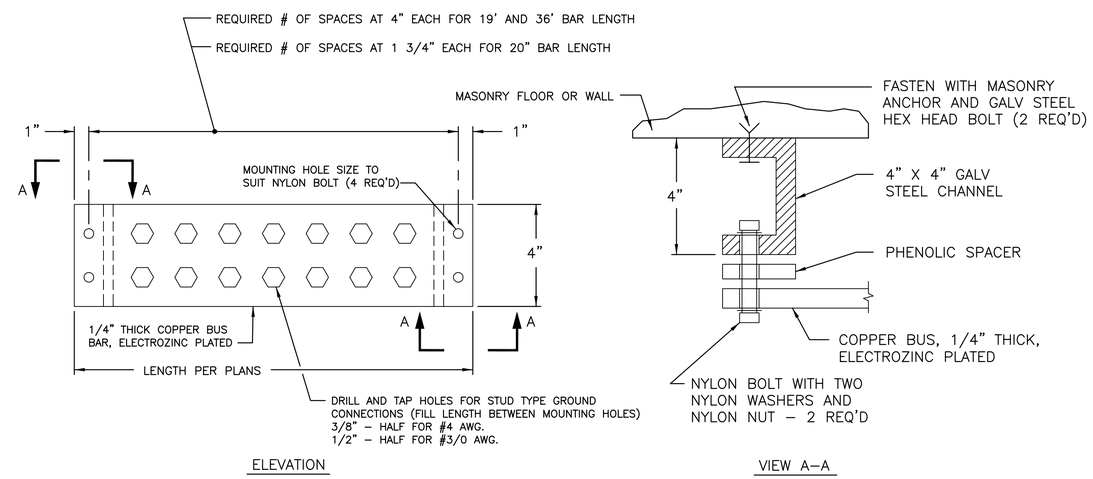

TELECOMMUNICATIONS GROUND BAR DETAIL

NOT TO SCALE

A
E-505 | E-508

US Army Corps of Engineers
Sacramento District

Symbol	Description	Date	Approved

Date: 10/21/05
Rev.
Design File no: 229-25-539
Drawing Code:
File name: N30E-508xxx.dwg
Plot date:
Plot scale: AS_NOTED
Spec. No.: 1304
Designed by: F. LUM
Dwn by: J. F.
Reviewed by:
Submitted by: /s/ Section Chief
Chief, Mech./Elec. Sec.

DEPARTMENT OF THE ARMY
CORPS OF ENGINEERS
SACRAMENTO, CALIFORNIA

SACRAMENTO DISTRICT
IN-HOUSE DESIGN
1325 "J" STREET
SACRAMENTO, CA 95814-2922

NEVADA
NELLIS AFB
F/A-22 ADD/ALTER WEAPONS SCHOOL
GROUNDING AND COMMUNICATION DETAILS

Sheet reference number:
E-508

UPDATE

Border Revised 03/07/04, CORSHTD2.DWG

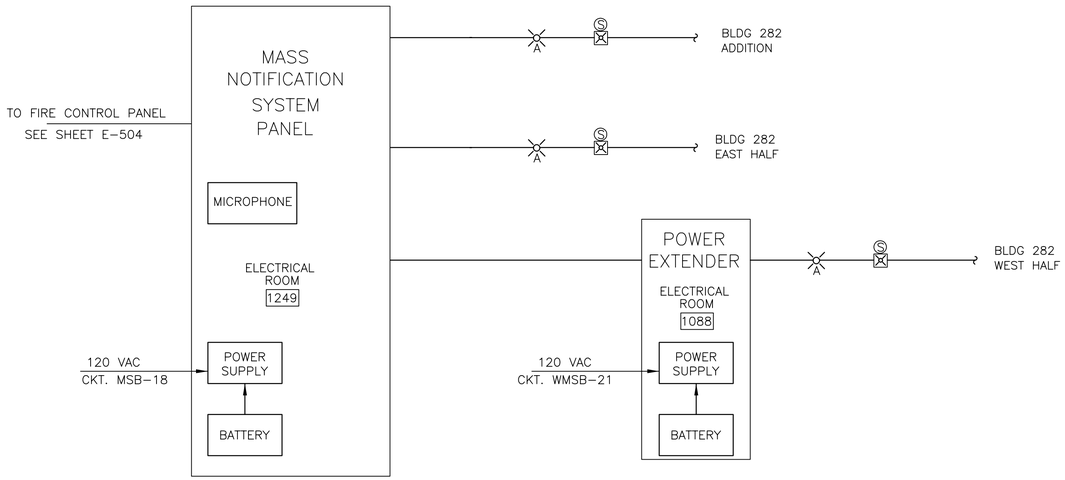

MASS NOTIFICATION SYSTEM DIAGRAM

NOT TO SCALE

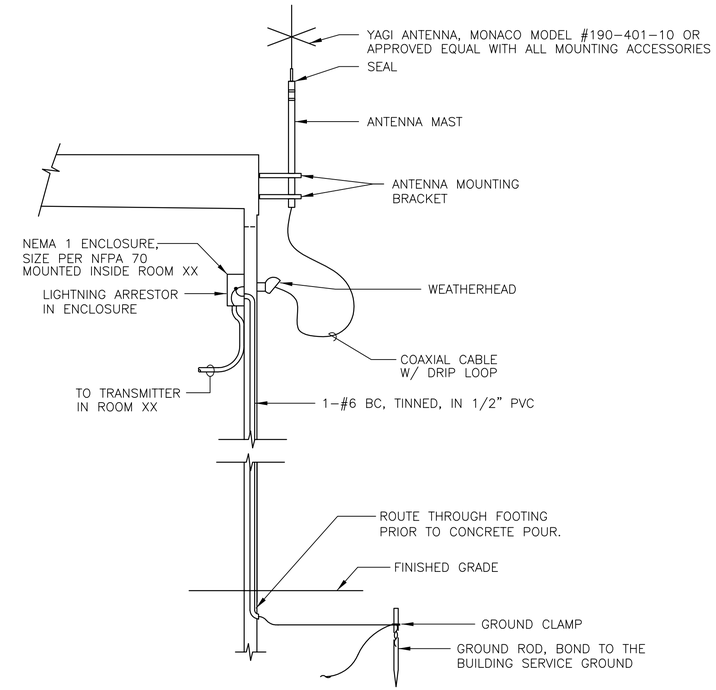

ANTENNA INSTALLATION

NOT TO SCALE

A

E-503, T-126 | E-509

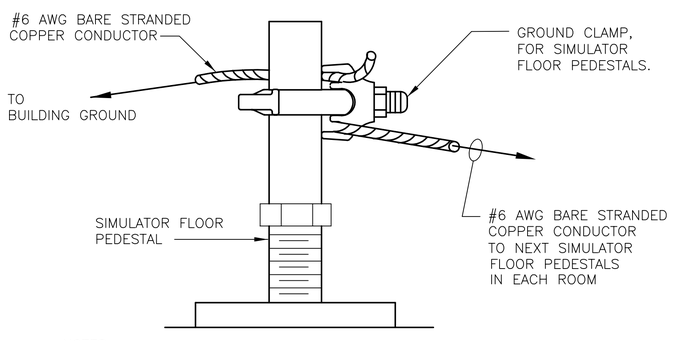

NOTES:

1. DO NOT DRILL THROUGH THE COMPUTER FLOOR PEDESTAL, FOR ANY REASON.
2. PROVIDE GROUND TIE EVERY 6' O.C.

FLOOR PEDESTAL GROUND TIE

NOT TO SCALE

B

E-115 | E-509

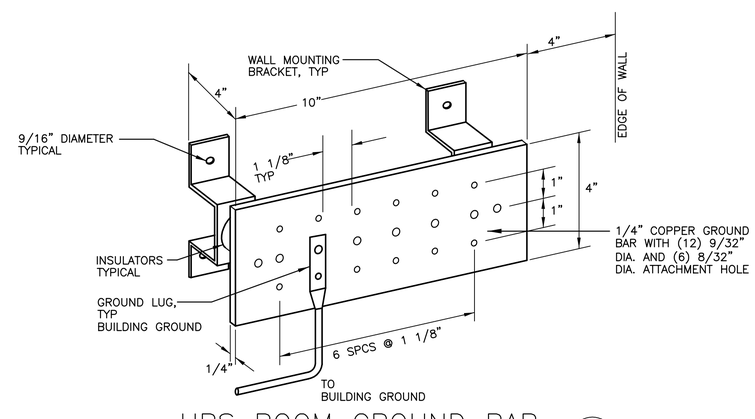

UPS ROOM GROUND BAR

NOT TO SCALE

C

E-115 | E-509

US Army Corps of Engineers
Sacramento District

Symbol	Description	Date	Approved

Designed by: F. LUM
Dwn by: J. F.
Reviewed by:
Submitted by: /s/ Section Chief
Date: 10/21/05
Rev.
Spec. No.: 1304
Design File no: 229-25-539
Drawing Code:
File name: N39E-509xx.dwg
Plot date:
Plot scale: AS_NOTED

DEPARTMENT OF THE ARMY
CORPS OF ENGINEERS
SACRAMENTO, CALIFORNIA

SACRAMENTO DISTRICT
IN-HOUSE DESIGN
1325 "J" STREET
SACRAMENTO, CA 95814-2922

NELLIS AFB
NEVADA

F/A-22 ADD/ALTER WEAPONS SCHOOL

FIRE ALARM SYSTEM DIAGRAM GROUNDING, AND DETAILS

Sheet reference number:
E-509

UPDATE

Border Revised 03/01/04, CCESHT02.DWG

KEYED NOTES:

1. ALL DUCT SHALL HAVE A MINIMUM 4" SEPARATION BETWEEN THEM, AND SHALL BE 3" MAX FROM WALL.
2. PUNCH DOWN ALL INSIDE WIRING AND OUTSIDE WIRING CABLES TO THE TERMINAL BLOCKS AND PATCH PANELS. DISTINCTIVELY IDENTIFY EACH CABLE FOR FUNCTION.
3. (1) CABLE TV CABLE HOMERUN (DEDICATED) TO EACH CABLE TV OUTLET.
4. #6 COPPER GREEN GROUND WIRE (INSULATED).
5. CABLE TV OUTLET – SEE POWER AND SIGNAL PLAN FOR NUMBER AND LOCATION. PROVIDE REQUIRED NUMBER OF DEDICATED 3/4" CONDUITS EACH WITH (1) CABLE TV CABLE TERMINATED ON AN F–SERIES JACK AT EACH CABLE TV OUTLET.
6. POWER BRANCH CIRCUIT CONDUIT SECURED TO CABINET. ROUTE TO OUTLET AT ADJACENT WALL VIA CABLE TRAY ABOVE. INSTALL PER NEC.
7. PROVIDE # AS REQUIRED OF INDICATED EQUIPMENT, TO TERMINATE ALL WIRING.
8. CABLE TV CABLE TO COMMUNICATIONS ROOM 2217.

GENERAL NOTES:

1. INSTALL ALL BLOCKS ON THE TTB A MINIMUM OF 36" A.F.F., A MINIMUM OF 6" FROM THE TTB SIDE EDGE, AND NO HIGHER THAN 66" A.F.F.
2. PROVIDE OFFSET BRACKETS AS REQUIRED ON TTB FOR SUPPORT AND ORGANIZATION OF ALL LOOSE CABLING.
3. PROVIDE PULL CORD IN ALL EMPTY DUCTS AND INNERDUCTS.
4. SEE POWER AND SIGNAL PLANS FOR QUANTITY AND LOCATION OF COMMUNICATIONS OUTLETS.
5. PROVIDE FIRE STOPPING MATERIAL AT ALL FIRE–RATED BOUNDARIES.
6. MAINTAIN SEPARATION REQUIREMENTS BETWEEN COMMUNICATIONS AND OTHER CABLES 3' MINIMUM SEPARATION WHERE PARALLEL FOR 5' OR MORE. WHERE POWER AND COMMUNICATIONS CABLES ARE PARALLEL FOR LESS THAN 5', THE MINIMUM SEPARATION MAY BE REDUCED TO 12".
7. ALL FIBER OPTIC CABLES SHALL TERMINATE ON THE FIBER PATCH PANELS.
8. SEE SHEET E–508 FOR GENERAL RACK LAYOUT CONFIGURATION. PROVIDE THE NUMBERS AND TYPE OF PATCH PANELS AS INDICATED ON PLANS.

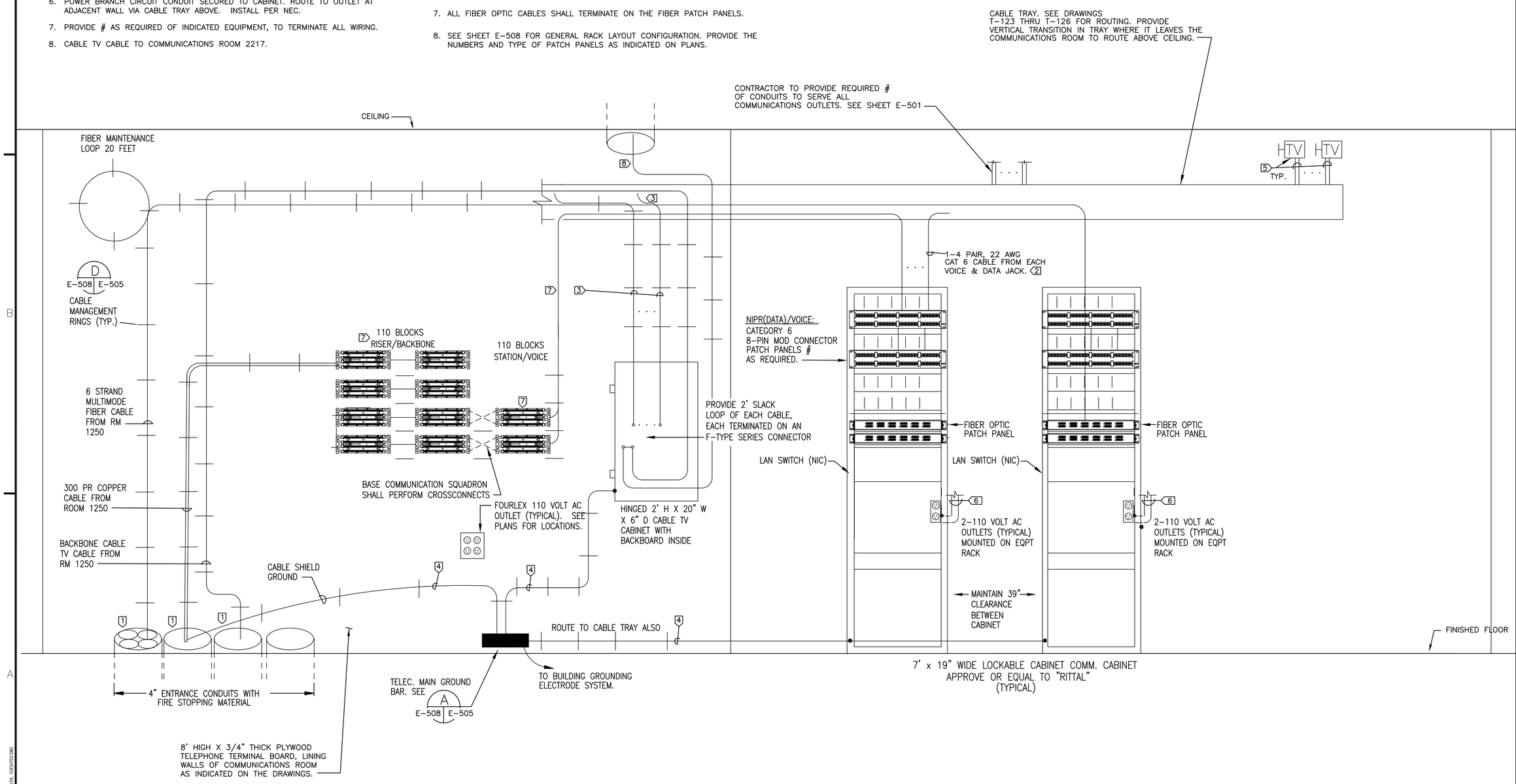

TTB LAYOUT – COMMUNICATIONS ROOM – 2233

NOT TO SCALE

US Army Corps of Engineers
Sacramento District

Symbol	Description	Date	Approved

Designed by: F. LUM	Date: 10/21/05
Dwn by: J. F.	Spec No.: 1304
Reviewed by:	Design file no: 229–25–539
Submitted by: /s/ Section Chief Const. Mgmt. Div. Sac.	Drawing Code:
	File name: N39E–510xx.dwg
	Plot date:
	Dwg scale: AS_NOTED

DEPARTMENT OF THE ARMY
CORPS OF ENGINEERS
SACRAMENTO, CALIFORNIA

SACRAMENTO DISTRICT
IN–HOUSE DESIGN
1325 "J" STREET
SACRAMENTO, CA 95814–2922

NEVADA

NELLIS AFB

F/A–22 ADD/ALTER WEAPONS SCHOOL

COMMUNICATIONS SYSTEM DIAGRAMS AND DETAILS – II

Sheet reference number:
E–510

UPDATE

Border Revised 03/01/04, 02S3R02.DWG

KEYED NOTES:

1. ALL DUCT SHALL HAVE A MINIMUM 4" SEPARATION BETWEEN THEM, AND SHALL BE 3" MAX FROM WALL.
2. PUNCH DOWN ALL INSIDE WIRING AND OUTSIDE WIRING CABLES TO THE TERMINAL BLOCKS AND PATCH PANELS. DISTINCTIVELY IDENTIFY EACH CABLE FOR FUNCTION.
3. (1) CABLE TV CABLE HOMERUN (DEDICATED) TO EACH CABLE TV OUTLET.
4. #6 COPPER GREEN GROUND WIRE (INSULATED).
5. CABLE TV OUTLET – SEE POWER AND SIGNAL PLAN FOR NUMBER AND LOCATION. PROVIDE REQUIRED NUMBER OF DEDICATED 3/4" CONDUITS EACH WITH (1) CABLE TV CABLE TERMINATED ON AN F–SERIES JACK AT EACH CABLE TV OUTLET.
6. POWER BRANCH CIRCUIT CONDUIT SECURED TO CABINET. ROUTE TO OUTLET AT ADJACENT WALL VIA CABLE TRAY ABOVE. INSTALL PER NEC.
7. PROVIDE # AS REQUIRED OF INDICATED EQUIPMENT, TO TERMINATE ALL WIRING.
8. 100 PAIR COPPER VOICE CABLE FROM COMMUNICATIONS ROOM 1250.
9. 6 STRAND MULTIMODE FIBER CABLE FROM COMMUNICATIONS ROOM 1250.
10. TV CABLE (BACKBONE) TO COMMUNICATIONS ROOM 2233.

GENERAL NOTES:

1. INSTALL ALL BLOCKS ON THE TTB A MINIMUM OF 36" A.F.F., A MINIMUM OF 6" FROM THE TTB SIDE EDGE, AND NO HIGHER THAN 66" A.F.F.
2. PROVIDE OFFSET BRACKETS AS REQUIRED ON TTB FOR SUPPORT AND ORGANIZATION OF ALL LOOSE CABLING.
3. PROVIDE PULL CORD IN ALL EMPTY DUCTS AND INNERDUCTS.
4. SEE POWER AND SIGNAL PLANS FOR QUANTITY AND LOCATION OF COMMUNICATIONS OUTLETS.
5. PROVIDE FIRE STOPPING MATERIAL AT ALL FIRE–RATED BOUNDARIES.
6. MAINTAIN SEPARATION REQUIREMENTS BETWEEN COMMUNICATIONS AND OTHER CABLES 3' MINIMUM SEPARATION WHERE PARALLEL FOR 5' OR MORE. WHERE POWER AND COMMUNICATIONS CABLES ARE PARALLEL FOR LESS THAN 5', THE MINIMUM SEPARATION MAY BE REDUCED TO 12".
7. ALL FIBER OPTIC CABLES SHALL TERMINATE ON THE FIBER PATCH PANELS.
8. SEE SHEET E–508 FOR GENERAL RACK LAYOUT CONFIGURATION. PROVIDE THE NUMBERS AND TYPE OF PATCH PANELS AS INDICATED ON PLANS.

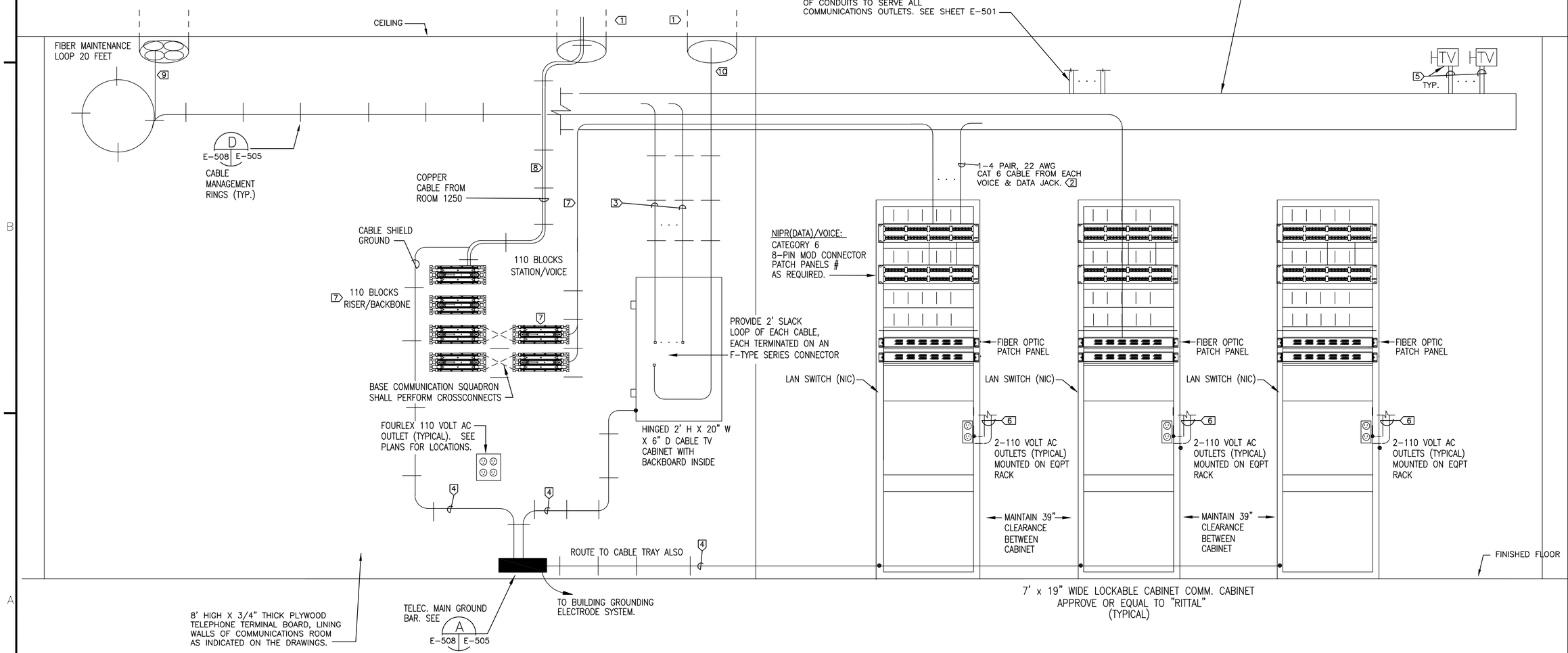

TTB LAYOUT – COMMUNICATIONS ROOM – 2217

NOT TO SCALE

US Army Corps of Engineers
Sacramento District

Symbol	Description	Date	Approved

Designed by: F. LUM	Date: 10/21/05
Dwn by: J. F.	Spec No.: 1304
Reviewed by:	Design File no: 229–25–539
Submitted by: F/A Section Chief Dwg Date: Dwg Scale:	Drawing Code:
	Rev.
	File name: N30E–511xxx.dwg
	Plot date:
	Dwg scale: AS_NOTED

DEPARTMENT OF THE ARMY
CORPS OF ENGINEERS
SACRAMENTO, CALIFORNIA

SACRAMENTO DISTRICT
IN–HOUSE DESIGN
1325 "J" STREET
SACRAMENTO, CA 95814–2922

NELLIS AFB NEVADA

F/A–22 ADD/ALTER WEAPONS SCHOOL

COMMUNICATIONS SYSTEM DIAGRAMS AND DETAILS – III

Sheet reference number:

E–511

UPDATE

Border Revised 03/01/04, 02S3R02.DWG

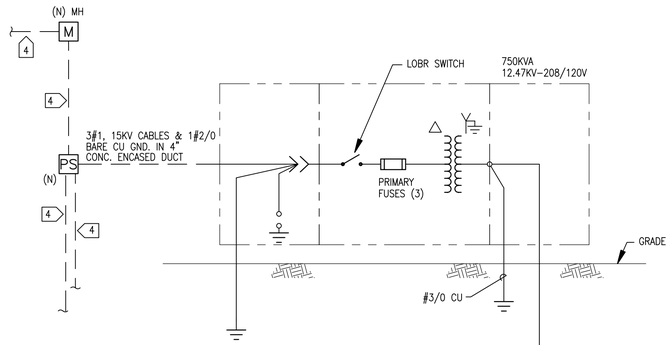

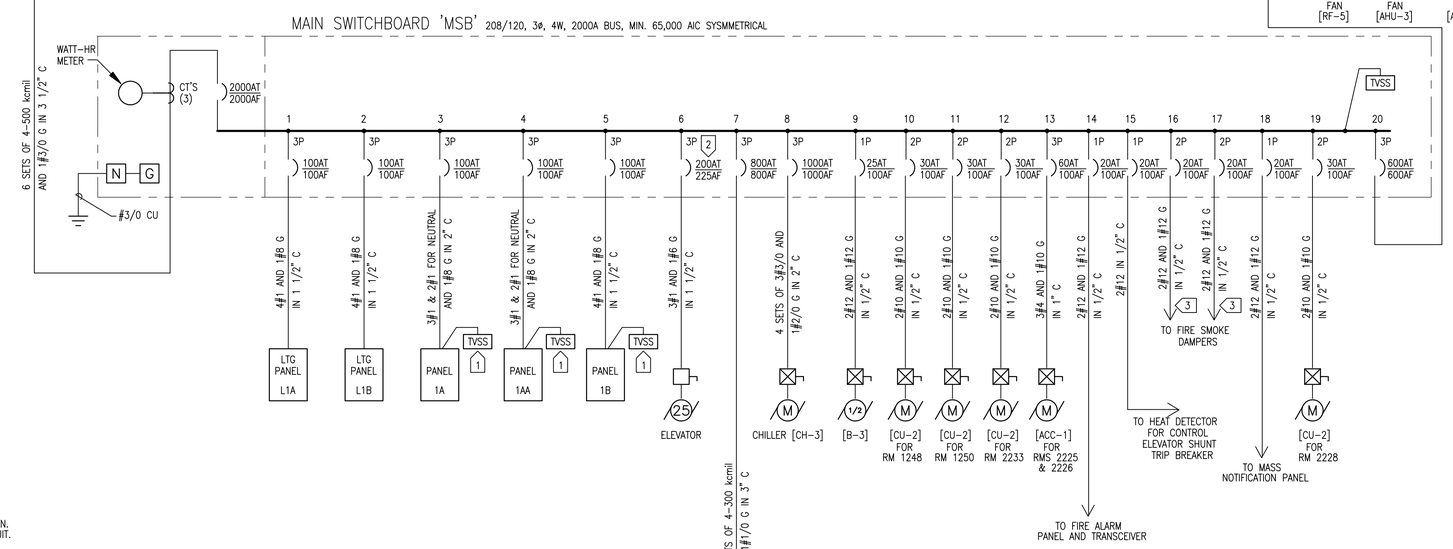

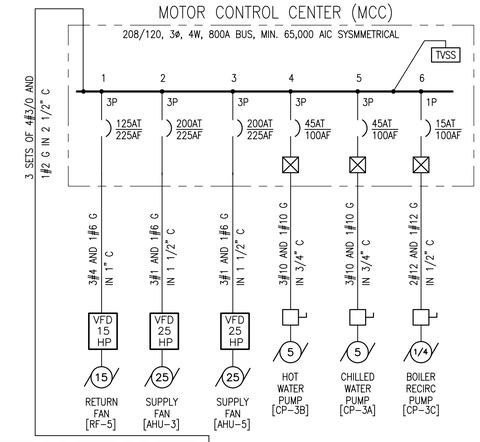

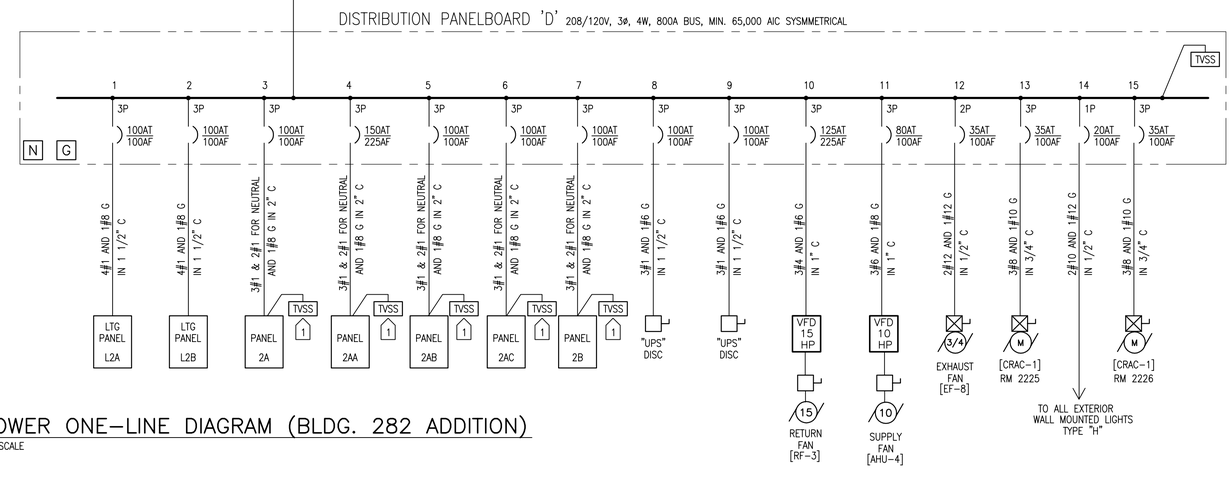

GENERAL NOTE:

PROVIDE A PLAQUE TO INDICATE THERE IS MORE THAN ONE SERVICE FOR FOR THIS FACILITY PER THE NEC.

KEYED NOTES:

1. MOUNT TVSS DEVICE INSIDE EQUIPMENT ENCLOSURE IT SERVICES.
2. PROVIDE SHUNT TRIP BREAKER FOR ELEVATOR POWER SHUNT DOWN.
3. CIRCUITS FOR SMOKE DAMPERS. SEE SHEET M-402 FOR SMOKER DAMPERS LOCATION. THERE SHALL BE NO MORE THAN THREE SMOKE DAMPERS BE CONNECTED PER CIRCUIT.
4. SEE SHEET E-121 SITE PLAN FOR CONDUCTOR AND CONDUIT SIZE.

POWER ONE-LINE DIAGRAM (BLDG. 282 ADDITION)

NO SCALE

US Army Corps of Engineers
Sacramento District

Symbol	Description	Date	Approved

Rev.

Date: 10/21/05
Design File no: 229-25-539
Drawing Code:
Spec No.: 1304
Designed by: F. LUM
Dwn by: J. FRESCAS
Reviewed by: J. PARRISH
Approved by: Chief, XXXX Des. Sec.
File name: N39E-601xxx.dwg
Plot date:
Dwg scale: AS_NOTED

DEPARTMENT OF THE ARMY
CORPS OF ENGINEERS
SACRAMENTO, CALIFORNIA

SACRAMENTO DISTRICT
IN-HOUSE DESIGN
1325 J STREET
SACRAMENTO, CA 95814-2922

NEVADA
NELLIS AFB
F/A-22 ADD/ALTER WEAPONS SCHOOL
POWER ONE-LINE DIAGRAM

Sheet reference number:
E-601

UPDATE

Border Revised 03/01/04, CDESIGN02.DWG

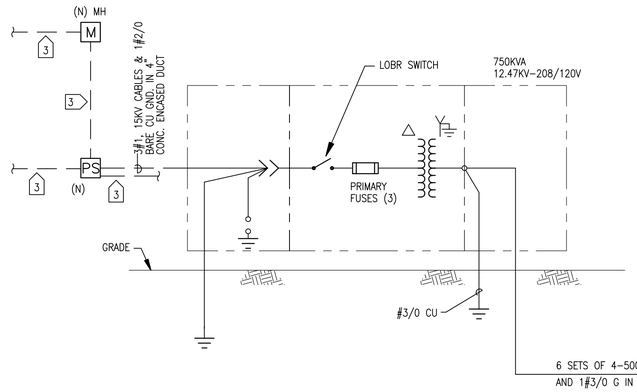

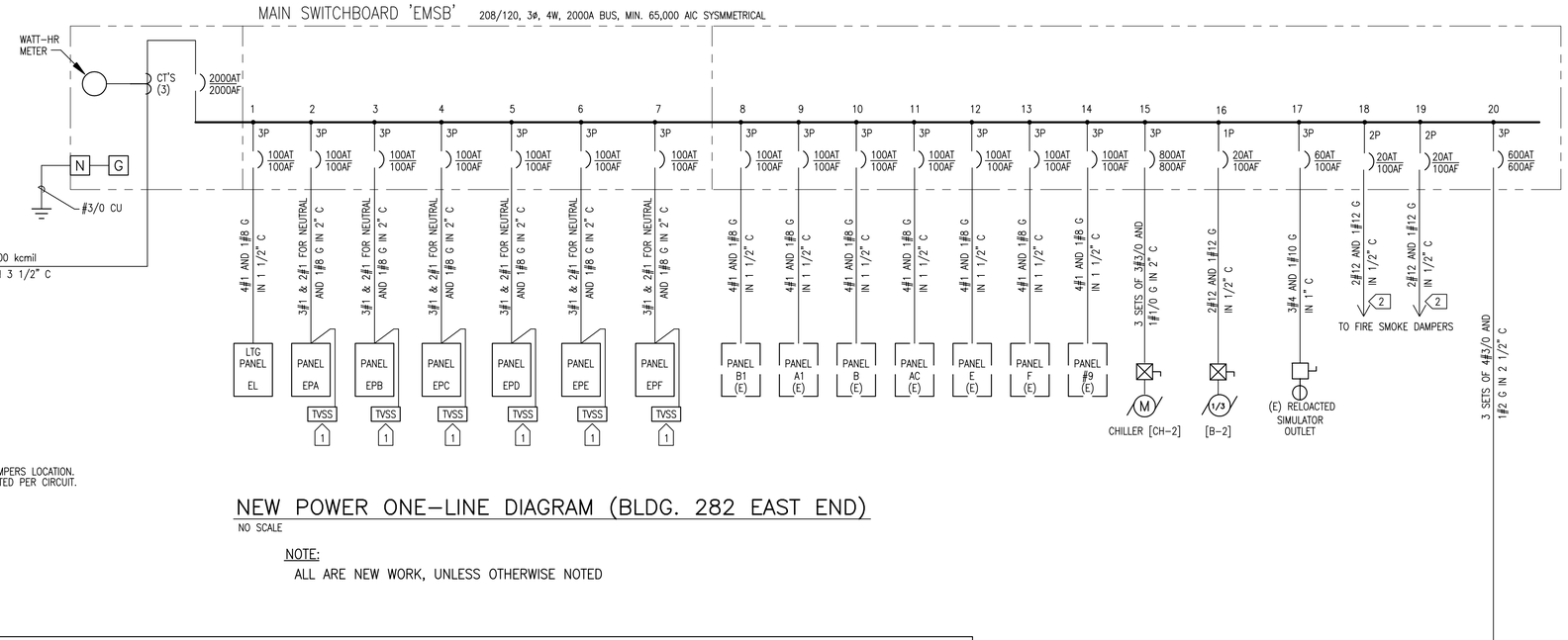

KEYED NOTES:

1. MOUNT TVSS DEVICE INSIDE EQUIPMENT ENCLOSURE IT SERVICES.
2. CIRCUITS FOR SMOKE DAMPERS. SEE SHEET M-403 FOR SMOKER DAMPERS LOCATION. THERE SHALL BE NO MORE THAN THREE SMOKE DAMPERS BE CONNECTED PER CIRCUIT.
3. SEE SHEET E-121 SITE PLAN FOR CONDUCTOR AND CONDUIT SIZE.

NEW POWER ONE-LINE DIAGRAM (BLDG. 282 EAST END)

NO SCALE

NOTE:
ALL ARE NEW WORK, UNLESS OTHERWISE NOTED

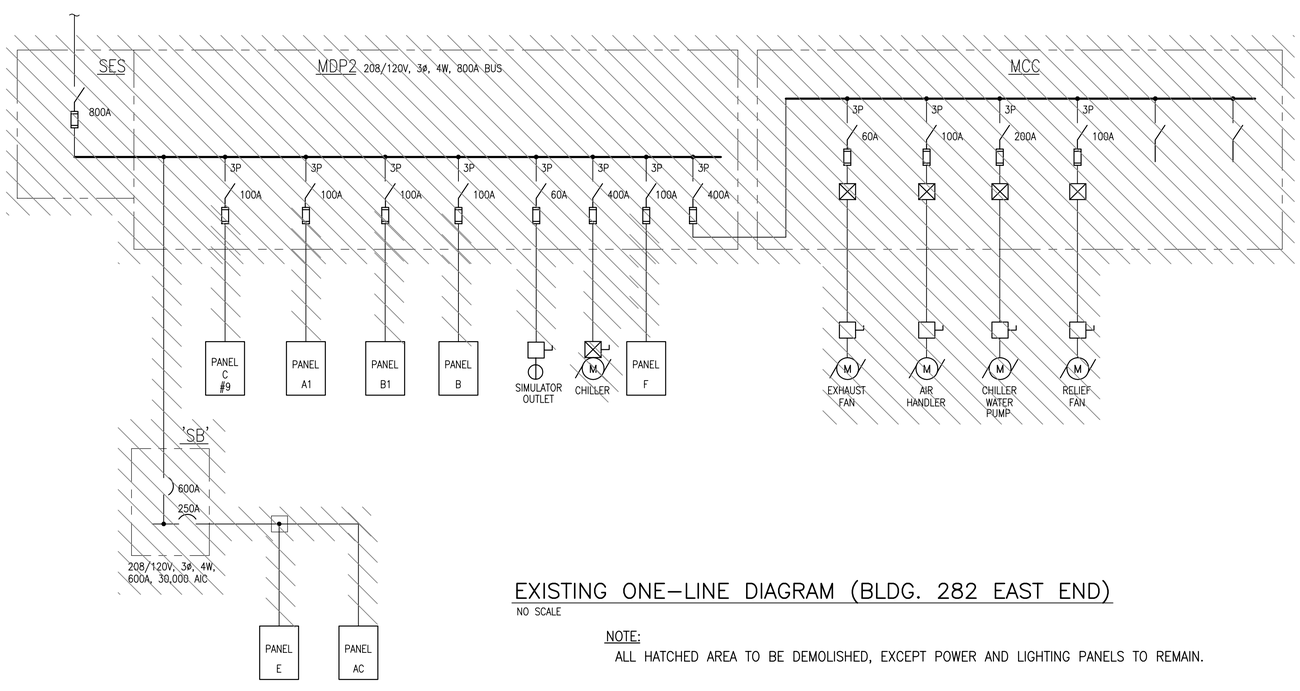

EXISTING ONE-LINE DIAGRAM (BLDG. 282 EAST END)

NO SCALE

NOTE:
ALL HATCHED AREA TO BE DEMOLISHED, EXCEPT POWER AND LIGHTING PANELS TO REMAIN.

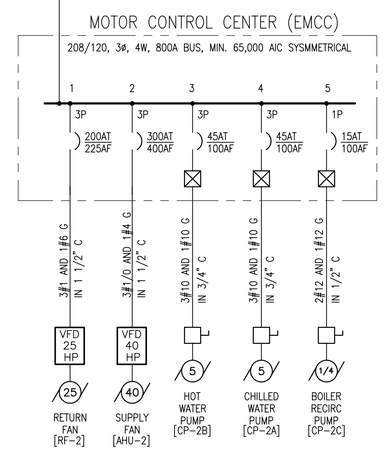

US Army Corps of Engineers
Sacramento District

Symbol	Description	Date	Approved

Designed by: F. LUM
Dwn by:
Reviewed by:
Submitted by: F/A Section Chief
Date: 10/21/05
Rev.
Date: 10/21/05
Design file no: 229-25-539
Save No.: 1304
Drawing Code:
File name: N30E-602xx.dwg
Plot date:
Plot scale: AS_NOTED

DEPARTMENT OF THE ARMY
CORPS OF ENGINEERS
SACRAMENTO, CALIFORNIA

SACRAMENTO DISTRICT
IN-HOUSE DESIGN
1325 "J" STREET
SACRAMENTO, CA 95814-2922

NEVADA

NELLIS AFB

F/A-22 ADD/ALTER WEAPONS SCHOOL

POWER ONE-LINE DIAGRAM
II

Sheet reference number:
E-602

UPDATE

Border Revised 03/01/04, 02S3102.DWG

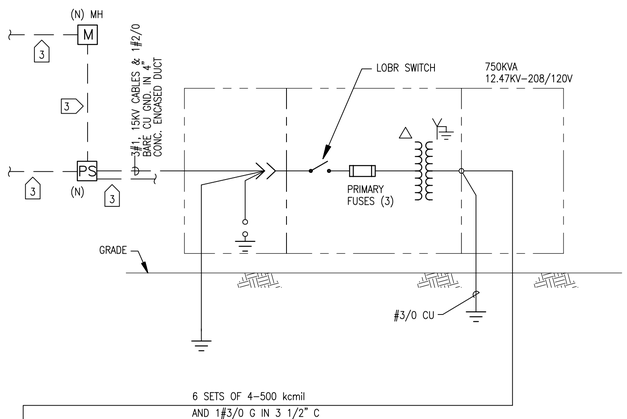

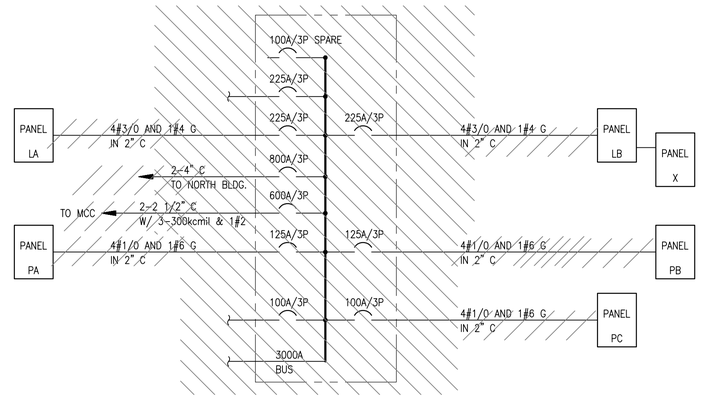

EXISTING DISTRIBUTION SECTION ONE-LINE DIAGRAM (282 WEST)

NO SCALE

NOTE:
ALL HATCHED AREA TO BE DEMOLISHED, EXCEPT POWER AND LIGHTING PANELS TO REMAIN.

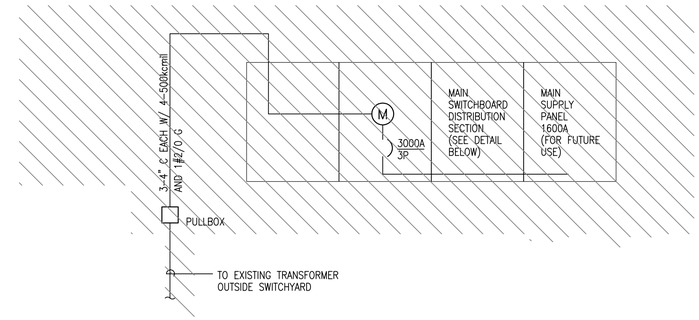

BUILDING 282 WEST EXISTING MAIN SWITCHBOARD "MSB"

NO SCALE

NOTE:
ALL HATCHED AREA TO BE DEMOLISHED

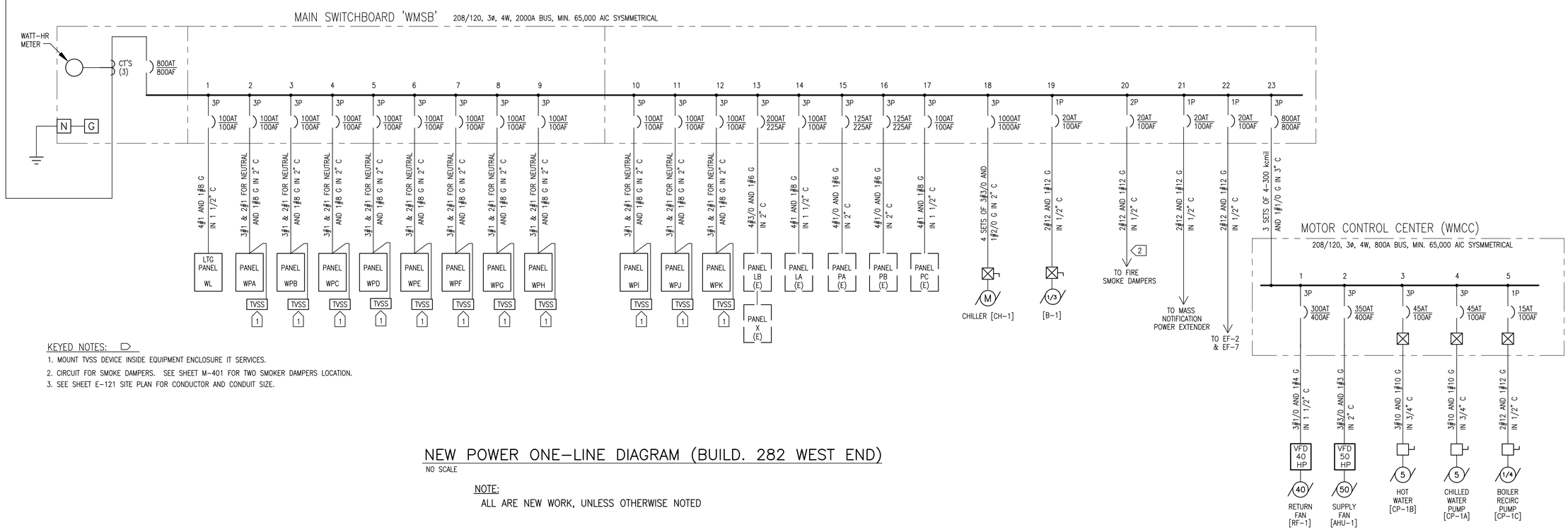

KEYED NOTES:

1. MOUNT TVSS DEVICE INSIDE EQUIPMENT ENCLOSURE IT SERVICES.
2. CIRCUIT FOR SMOKE DAMPERS. SEE SHEET M-401 FOR TWO SMOKER DAMPERS LOCATION.
3. SEE SHEET E-121 SITE PLAN FOR CONDUCTOR AND CONDUIT SIZE.

NEW POWER ONE-LINE DIAGRAM (BUILD. 282 WEST END)

NO SCALE

NOTE:
ALL ARE NEW WORK, UNLESS OTHERWISE NOTED

US Army Corps of Engineers
Sacramento District

Symbol	Description	Date	Approved

Date: 10/21/05
Rev.
Design File no: 229-25-539
Drawing Code:
File name: N39E-603xxx.dwg
Plot date:
Plot scale: AS_NOTED
Designed by: F. LUM
Spec. No.: 1304
Dwn by:
Reviewed by:
Submitted by: /S/ Section Chief
Date: 10/21/05

DEPARTMENT OF THE ARMY
CORPS OF ENGINEERS
SACRAMENTO, CALIFORNIA

SACRAMENTO DISTRICT
IN-HOUSE DESIGN
1325 "J" STREET
SACRAMENTO, CA 95814-2922

NEVADA
NELLIS AFB
F/A-22 ADD/ALTER WEAPONS SCHOOL
POWER ONE-LINE DIAGRAM III

Sheet reference number:
E-603

UPDATE

Border Revised 03/01/04, CCESHT02.DWG